OMNI-Test Laboratories, Inc.

EPA Standard of Performance for New Residential Wood Heaters

Certification Test Report

Non-Confidential Business Information (Non-CBI)

Manufacturer: Kuma Stoves, Inc.
Heater Type: Wood-Fired, Catalytic Woodstove

K-180 Series
Models: Aspen LE, Tamarack LE, Aberdeen LE, Alpine LE

Prepared for: Kuma Stoves, Inc.
50145 N Old Hwy 95
Rathdrum ID 83858
USA

Prepared by: OMNI-Test Laboratories, Inc.
13327 NE Airport Way
Portland, OR 97230
(503) 643-3788

Test Period: February 26 – March 6, 2019

Original Report Date: April 23, 2019
Report Revision Date: **July 1, 2021**
Report Number: 0123WM011E

All data and information contained in this report are confidential and proprietary to Kuma Stoves, Inc. Its significance is subject to the adequacy and representative character of the samples and to the comprehensiveness of the tests, examinations, or surveys made. The contents of this report cannot be copied or quoted, except in full, without specific, written authorization from Kuma Stoves, Inc. and OMNI-Test Laboratories, Inc. No use of the OMNI-Test Laboratories, Inc. name, logo, or registered mark (O-TL) is permitted, except as expressly authorized by OMNI-Test Laboratories, Inc. in writing.

AUTHORIZED SIGNATORIES

This report has been reviewed and approved by the following authorized signatories:

Evaluator:

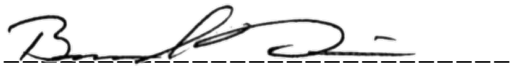

Bruce Davis
Testing Manager
OMNI-Test Laboratories, Inc.

OMNI-Test Laboratories, Inc.

TABLE OF CONTENTS

PREFACE ..... (3 pages)

Section 1 –Appliance, Testing, & Results 4

1.1 Summary Tables 5
Table 1 – Particulate Emissions 5
Table 2 – First Hour Emissions 5
Table 3 – B 415.1 Efficiency and CO Emissions 5
Table 4 – Test Facility Conditions 6
Table 5 – Kindling and Start-up Fuel Description 6
Table 6 – Test Fuel Cordwood Description 6
Table 7 – Dilution Tunnel Gas Measurements and Sampling Data 7
Table 8 – Sample Train Precision 8
Table 9 – Operating and Start-up Procedures 9
1.2 Procedures & Results Summary 9
1.3 Appliance Description 12
1.4 Photographs 15

Section 2 – Test Data 20

2.1 Manufacturer's Specified Procedures 21
2.2 Test Data by Run 26
2.3 Sample Analysis & Tares 178

Section 3 –Laboratory Quality Assurance 193

3.1 Quality Assurance/Quality Control 194
3.2 Calibration Data 195
3.3 Example Calculations 212

Appendix A – Labeling & Owner's Manual

Appendix B – Alt 125 letter

Appendix C – Firebox Volume

Appendix D – Revision History

Section 1
Appliance, Testing, & Results

1.1 – Summary Tables
1.2 – Procedures and Results Summary
1.3 – Appliance Description
1.4 – Photographs

1.1 – Summary Tables

Table 1 – Particulate Emissions

Run	Burn Rate Hot to hot cycle (kg/hr dry)	ASTM E2515 Emissions (g/h)	ASTM E3053 Weighting Factor (%)	ASTM E3053 Weighted Emissions (g/hr)
1	2.26	2.03	20	0.41
2	0.68	0.38	40	0.15
*4**	*0.74*	*5.78*	*0**	*0.00*
5	0.70	0.39	20†	0.08
6	0.80	0.40	20†	0.08
The sum of weighted particulate emission of 4 test runs: **0.72** grams per hour.				

*Run 4 excluded from weighted average at manufacturer's request; replaced by runs 5 and 6.

† To achieve a medium category weighting of 40% per ASTM E3053, the two medium runs included in the weighted average are each assigned a 20% weighting.

Table 2 – Particulate Emissions (First Hour)

Run	ASTM E2515 Emissions – First Hour (g/h)
1	3.17
2	1.11
4	29.62
5	1.19
6	1.70

Table 3 – B415.1 Efficiency and CO Emissions

Run	Output (BTU/hr)	HHV Efficiency (%)	LHV Efficiency (%)	CO (g/MJ Output)	CO (g/kg Dry Fuel)	CO (g/min)
1	32,121	75.8%	81.9%	0.03	0.40	0.015
2	10,614	82.6%	89.2%	0.59	9.73	0.111
4	11,009	79.1%	85.5%	5.57	87.31	1.078
5	10,767	82.2%	88.8%	0.69	11.18	0.130
6	12,267	82.0%	88.6%	0.57	9.25	0.123
Weighted average HHV efficiency of 4 test runs: **81.0%** Average CO Emissions of four tests: 0.10 g/min						

1.1 – Summary Tables

Table 4 – Test Facility Conditions

Run	Room Temperature (°F)		Barometric Pressure (Hg)		Air Velocity (ft/min)	
	Before	After	Before	After	Before	After
1	60	72	28.50	28.47	<50	<50
2	73	68	28.47	28.40	<50	<50
4	76	75	28.33	28.41	<50	<50
5	74	64	28.56	28.58	<50	<50
6	74	76	27.92	27.91	<50	<50

Table 5 – Kindling and Start-up Fuel Description Summary

Run	Kindling Weight Wet Basis (lbs.)	Start-up Weight Wet Basis (lbs.)	Residual Start-up weight (lbs.)
1	3.27	4.90	2.0
3*	3.36	5.03	1.6
5 (pre)*	3.31	4.93	2.0
6 (pre)*	3.32	4.99	1.9

*Runs 3, 5 (pre), and 6 (pre) were for the purpose of coal bed creation only; no particulate sampling was conducted.

Table 6 – Test Fuel Cordwood Description Summary

Run	Test Fuel Wet Basis (lbs)	Firebox Volume (ft^3)	Fuel Loading Density Wet Basis (lbs/ft^3)	Test Fuel Dry Basis (lbs)	Fuel Consumed During Test Dry Basis (lbs)	Piece Length (in)
1	16.49	1.74	9.5	20.69	17.2	5 @ 16"
2	19.98	1.74	11.4	16.55	16.5	5 @ 16"
3*	16.78	1.74	9.6	21.33	17.7	5 @ 16"
4	19.82	1.74	11.4	16.41	16.4	5 @ 16"
5 (pre)*	16.53	1.74	9.50	20.19	16.7	5 @ 16"
5	19.79	1.74	11.4	16.29	16.3	5 @ 16"
6 (pre)*	16.63	1.74	9.6	20.88	17.4	5 @ 16"
6	19.98	1.74	11.5	16.49	16.5	5 @ 16"

*Runs 3, 5 (pre), and 6 (pre) were for the purpose of coal bed creation only; no particulate sampling was conducted.

1.1 – Summary Tables

Table 7 – Dilution Tunnel Gas Measurements and Sampling Data Summary

Run	Length of Test (min)	Average Dilution Tunnel Gas Measurements		
		Velocity (ft/sec)	Flow Rate (dscf/min)	Temperature (°F)
1	208	18.52	188.6	110
2	659	18.29	194.5	85
4	605	18.35	193.0	90
5	637	17.33	186.0	82
6	564	16.97	175.3	90

Table 8-Sample Train Precision

Run Number	Train Precision ±7.5%	Train Precision ±0.5 g/kg	Compliant
1	3.79	0.05	Yes
2	2.32	0.02	Yes
5	0.59	0.004	Yes
6	4.95	0.03	Yes

1.1 – Summary Tables

Table 9 – Operating & Startup Procedures

Run	Startup Procedures	Combustion Air
1	Fuel Loading: Kindling and start-up fuel loaded together, a torch was used for 20 seconds to establish a fire. Test fuel loaded from 61-62 min. Door: For kindling and start-up fuel, closed 45 seconds after loading. For test fuel, closed 95 seconds after loading. Primary Air: Air control fully open for the entire test. Fan: On high at 5 minutes Bypass: Open 15 minutes during startup; closed with door for test load.	Fully open
2	Fuel Loading: Loaded onto coal bed generated by run 1 in 78 seconds. Door: Open for 78 seconds, then closed. Primary Air: Fully open, then set to full closed at 15 minutes Fan: Fan turned from off to low at 30 minutes. Bypass: Open until 78 seconds then closed.	Fully closed
3	Fuel Loading: Kindling and start-up fuel loaded together, a torch was used for 20 seconds to establish a fire. Test fuel loaded from 48-50 min. Door: For kindling and start-up fuel, closed 35 seconds after loading. For test fuel, closed 75 seconds after loading. Primary Air: Air control fully open for the entire test. Fan: On high Bypass: Open 15 minutes during startup; closed with door for test load.	Fully open
4	Fuel Loading: Loaded onto coal bed generated by run 3 in 72 seconds. Door: Open for 72 seconds, then closed. Primary Air: Fully open, then set to 11/32” at 15 minutes Fan: Fan turned from off to low at 30 minutes. Bypass: Open until 72 seconds then closed.	11/32” open
5 (pre)	Fuel Loading: Kindling and start-up fuel loaded together, a torch was used for 20 seconds to establish a fire. Test fuel loaded from 54-56 min. Door: For kindling and start-up fuel, closed 1 minute after loading. For test fuel, closed immediately after loading. Primary Air: Air control fully open for the entire test. Fan: On high Bypass: Open 15 minutes during startup; closed with door for test load.	Fully open
5	Fuel Loading: Loaded onto coal bed generated by run 5 (pre) in 60 seconds. Door: Open for 78 seconds, then closed. Primary Air: Fully open, then set to 11/32” at 15 minutes Fan: Fan turned from off to low at 30 minutes. Bypass: Open until 78 seconds then closed.	11/32” open
6 (pre)	Fuel Loading: Kindling and start-up fuel loaded together, a torch was used for 20 seconds to establish a fire. Test fuel loaded from 48-50 min. Door: For kindling and start-up fuel, closed 1 minute after loading. For test fuel, closed immediately after loading. Primary Air: Air control fully open for the entire test. Fan: On high Bypass: Open 15 minutes during startup; closed with door for test load.	Fully open
6	Fuel Loading: Loaded onto coal bed generated by run 6 (pre) in 90 seconds. Door: Open for 105 seconds, then closed. Primary Air: Fully open, then set to 13/32” at 15 minutes Fan: Fan turned from off to low at 30 minutes. Bypass: Open until 105 seconds then closed.	13/32” open

1.2 – Procedures and Results Summary

TESTING PROCEDURE

The Aspen LE was tested as part of the K-180 Series in accordance with the U.S. EPA 40 CFR Part 60, Subpart AAA – Standards of Performance for New Residential Wood Heaters using ASTM E2515, ASTM E3053, and EPA ALT-125. The fuel used for certification testing was douglas fir cordwood meeting the specifications of ASTM E3053. Particulate emissions were measured using dual sampling trains consisting of two sets of filters (front and back).

The unit was installed in accordance with the manufacturer's instructions. Six complete integrated test runs were performed, each consisting of a high burn rate test started from cold and a low or medium burn rate test started from the high burn's coal bed. Emissions were sampled for only one of the high burn rate tests.

The K-180 Series' control system consists of a primary air slide at the side of the unit. The handle actuates a sliding plate that blocks off the primary intake.

RESULTS SUMMARY

Proportionality results of the six sampling and non-sampling test runs, in addition to all other validity criteria, were within specified limits, and no sampling anomalies occurred. All burn rate categories were achieved. Therefore, all test runs are considered appropriate and valid. However, the manufacturer elected not to use the results of run 4, a medium burn, in the weighted average. Therefore, two additional test runs at the medium burn setting were performed.

All fuel load pieces were split to meet the individual and total load weight range for the firebox, pieces were not intentionally debarked or shaped. Fuel load was positioned in the firebox as per manufacturer's instructions.

There were no negative filter weights in this test series, negative gasket weights are within allowable tare weight tolerance and are used as zero weight in calculations. No anomalies were noted.

The results of the four test runs used indicate a weighted average particulate emission rate of 0.72 g/hr. The Aspen LE results are within the emission limit of 2.5 g/hr for affected appliances manufactured or sold at retail on or after May 15, 2020.

The model Aspen LE was tested for thermal efficiency and carbon monoxide (CO) emissions in accordance with CSA B415.1-10. The heater has a demonstrated an average thermal efficiency of 81.0%. The calculated CO emission rate was 0.14 g/min.

Upon completion of emissions certification testing, the sample unit was sealed and will be stored by the manufacturer in accordance with the requirements of the CFR.

1.2 - Procedures and Results Summary

RUN NARRATIVE

Run 1 – High – This run was performed as a cold start per ASTM E3053. Sampling was conducted in accordance with ASTM E2515 and EPA ALT-125. The primary air was fully open. Ignition was achieved by the use of a propane torch for 25 seconds. Startup fuel was loaded together with kindling, and the test fuel load was loaded at 61 minutes. All air adjustments were completed by 15 minutes. The test was concluded with 2.0 lb. of residual fuel in the firebox. Quality checks found that filter temperatures exceeded a temperature limit of 90 degrees for two readings on filter B. An evaluation was conducted to determine if precision between the two filter trains was affected by the variance. There was no evidence that the short amount of time affected results. All proportionality, sampling, and procedural requirements were met, so this is a valid run for inclusion in the weighted average.

Run 2 – Low – This run was performed as a hot start per ASTM E3053, using the remainder of Run 1 - High as a coal bed. The primary air was set to fully closed. Sampling was conducted in accordance with ASTM E2515 and EPA ALT-125. The test fuel was loaded by 70 seconds of test time. All air adjustments were completed by 15 minutes. The test was concluded with zero residual fuel in the firebox. Quality checks found that filter temperatures exceeded a temperature limit of 90 degrees on filter A and B. An evaluation was conducted to determine if precision between the two filter trains was affected by the variance. There was no evidence that the short amount of time affected results. All proportionality, sampling, and procedural requirements were met, so this is a valid run for inclusion in the weighted average.

Run 3 – High – This run was performed as a cold start per ASTM E3053. No sampling was conducted for this run. The primary air was fully open. Ignition was achieved by the use of a propane torch for 20 seconds. Startup fuel was loaded together with kindling, and the test fuel load was loaded at 54 minutes. All air adjustments were completed by 56 minutes. The test was concluded with 2.0 lb. of residual fuel in the firebox. All procedural requirements were met, so this is a valid run for use as a coal bed.

Run 4 – Medium – This run was performed as a hot start per ASTM E3053, using the remainder of Run 3 - High as a coal bed. The primary air was set to 11/32” open. Sampling was conducted in accordance with ASTM E2515 and EPA ALT-125. The test fuel was loaded by 80 seconds of test time. All air adjustments were completed by 15 minutes. The test was concluded with 2.9 lb. of residual fuel in the firebox.

All proportionality, sampling, and procedural requirements were met, so this is a valid run for inclusion in the weighted average. However, the manufacturer elected to exclude this run due to performance deemed abnormal. Two additional runs were performed in the Medium category to satisfy the run exclusion criteria of ASTM E3053.

Run 5 (pre) – High – This run was performed as a cold start per ASTM E3053. No sampling was conducted for this run. The primary air was fully open. Ignition was achieved by the use of a propane torch for 20 seconds. Startup fuel was loaded together with kindling, and the test fuel load was loaded at 54 minutes. All air adjustments were completed by 56 minutes. The test was concluded with 2.0 lb. of residual fuel in the firebox. All procedural requirements were met, so this is a valid run for use as a coal bed.

Run 5 – Medium – This run was performed as a hot start per ASTM E3053, using the remainder of Run 2- High as a coal bed. The primary air was set to 11/32” open. Sampling was conducted in accordance with ASTM E2515 and EPA ALT-125. The test fuel was loaded by 60

1.2 - Procedures and Results Summary

Run 6 (pre) – High – This run was performed as a cold start per ASTM E3053. No sampling was conducted for this run. The primary air was fully open. Ignition was achieved by the use of a propane torch for 20 seconds. Startup fuel was loaded together with kindling, and the test fuel load was loaded at 48 minutes. All air adjustments were completed by 50 minutes. The test was concluded with 1.9 lb. of residual fuel in the firebox. All procedural requirements were met, so this is a valid run for use as a coal bed.

Run 6 – Medium – This run was performed as a hot start per ASTM E3053, using the remainder of Run 2- High as a coal bed. Due to the extended run time of Run 5, the primary air was set at 13/32" open. Sampling was conducted in accordance with ASTM E2515 and EPA ALT-125. The test fuel was loaded by 60 seconds of test time. All air adjustments were completed by 15 minutes. The test was concluded with zero residual fuel in the firebox. All proportionality, sampling, and procedural requirements were met, so this is a valid run for inclusion in the weighted average.

1.3 - Appliance Description

Manufacturer: Kuma Stoves, Inc.
Woodstove Model: K-180 Series
Type: Wood fired, Catalytic Freestanding Woodstove.

The K-180 Series is a four stove model line that contains both a freestanding and insert type appliance. All models share a common firebox, air control system, combustor, and flue exit. Each model has a loading door with a large glass viewing window, 160 cfm room air blower, and models Aspen and Tamarack can be fitted with either legs or a pedestal base.

Combustion air enters through an intake, varied in area by a manually controlled linear actuator. At minimum setting, the intake area is 0.37 in^2, and at maximum it is 6.97 in^2.

Air travels from the intake to a variety of primary and secondary combustion air ports within the firebox. Primary air enters through an air wash above the loading door and a three pilot orifices at the lower front of the firebox. Secondary air enters through three secondary tubes located at the top of the firebox under the baffle. After travelling around the baffle, combustion products exit the firebox through a 6" flue collar located at the top of the unit.

The unit features a 13" x 2.5" x 2" thick ceramic combustor to control emissions. It is located above the baffle and combustion products are routed through it when the bypass (controlled by a handle at the upper right of the unit) is closed. Its temperature is monitored by a probe located 1" from the rear of the combustor.

The glass panel is constructed of 5mm ceramic glass and is 14" x 9.3" with a rounded top. The firebox is insulated with standard-size firebrick and ½" thick fiberglass insulation blanketing.

Four models are contained in the K-180 Series: The Aspen LE, Aberdeen LE, Alpine LE, and Tamarack LE. The only differences between the three models are cosmetic in nature; all four are identical with respect to items that could affect emissions performance.

More detailed information is shown in the manufacturer's design drawings, Appendix C of this report. This information is considered confidential business information (CBI) by the manufacturer and is not included in the non-CBI version of this report.

Aspen LE – Sealed Test Unit





Kuma K-180 Series Model Variations

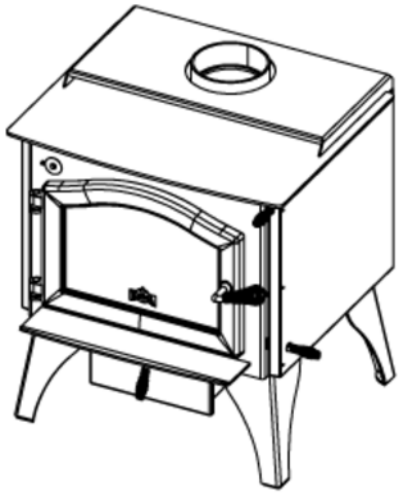

Model ASPEN: The tested unit. A pedestal base with an ash drawer can be bolted on in lieu of the legs.

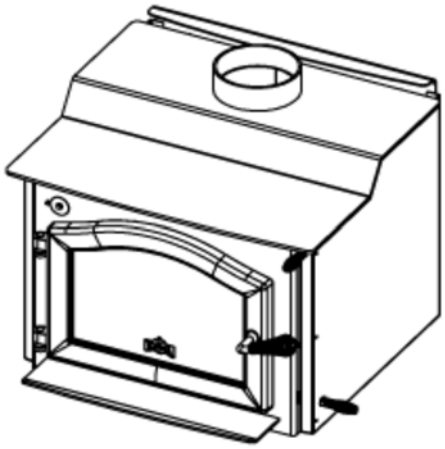

Model TAMARACK: This unit receives a decorative step at the back of the top plate. The firebox remains flat to match the tested unit and the flue collar is extended through to the top of the step. The position of the flue collar is unchanged from the tested unit.

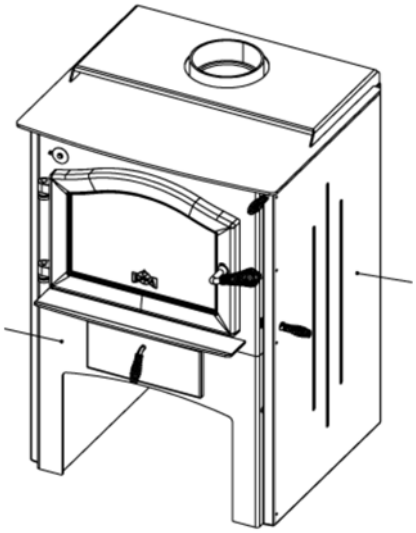

Model ABERDEEN: This unit receives a pre-installed pedestal and extensions to the decorative panels to meet with the base of the pre-installed pedestal. The configuration of the firebox remains unchanged from the pedestal mounting position and up.

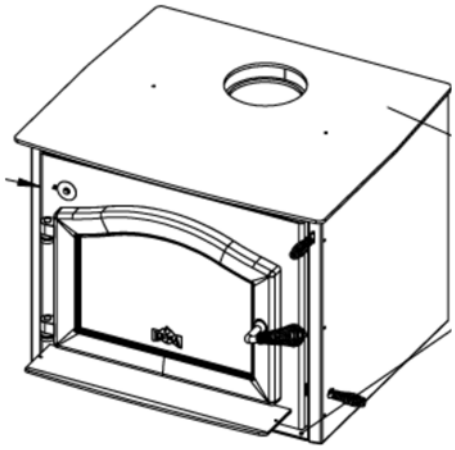

Model ALPINE: This unit receives a top and a bottom convection panel for use in a fireplace insert. The side panels remain unchanged. The firebox configuration remains unchanged from the tested unit.

1.4 - Photographs



Aspen LE Front



Aspen LE Back



Aspen LE Left



Aspen LE Right

1.4 - Photographs



Run 1 Kindling & Startup



Run 1 Kindling Loaded



Run 1 Test Fuel



Run 1 Test Fuel Loaded



Run 2 Test Fuel



Run 2 Test Fuel Loaded

1.4 - Photographs



Run 3 Kindling & Startup


Run 3 Kindling Loaded



Run 3 Test Fuel


Run 3 Test Fuel Loaded



Run 4 Test Fuel


Run 4 Test Fuel Loaded

1.4 - Photographs



Run 5 (pre) Kindling & Startup



Run 5 (pre) Kindling Loaded



Run 5 (pre) Test Fuel



Run 5 (pre) Test Fuel Loaded



Run 5 Test Fuel



Run 5 Test Fuel Loaded

1.4 - Photographs



Run 6 (pre) Kindling



Run 6 (pre) Kindling Loaded



Run 6 (pre) Test Fuel



Run 6 (pre) Test Fuel Loaded

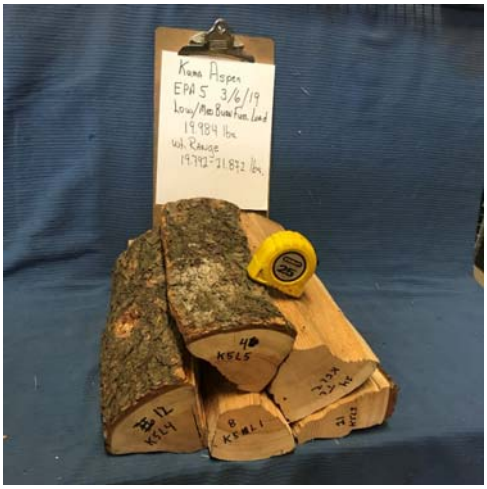

Run 6 Test Fuel



Run 6 Test Fuel Loaded

Section 2
Test Data

2.1 Manufacturer's Specified Procedures
2.1 Test Data by Run
2.2 Sample Analysis & Tares

2.1 - Manufacturer's Specified Procedures

KUMA STOVES, INC.
50145 N. OLD HWY. 95
RATHDRUM, ID 83858
888 714 5294

24 February 2019

RE: OPERATING INSTRUCTIONS FOR THE
KUMA 2020 ASPEN HYBRID WOOD STOVE (V1)

Nominal Fuel Piece Length: 16″

Loading Orientation: N/S

PRIMARY AIR CONTROL:

The Primary air control (PAC) is located on the left side of the stove. Pull the PAC control rod out to increase the amount of air entering the stove. Push the PAC control rod in to reduce the amount of primary air entering the stove.

Kindling Cold Start (KS) Setting: Pull the rod all the way out until the Primary Air Inlet orifice is 6.00″ open.

High Burn Setting: Pull the rod all the way out until the Primary Air Inlet orifice is 6.00″ open. The rod should already be in this position at the end of the KS test segment, i.e., no adjustment is or should be required.

Medium Burn Setting: At the end of the 90% High Burn test, push the rod in until the end of the primary air control rod is 1.28125″ (1&9/32″) from the side of the stove. The PAC should be open 11/32″.

Low Burn Setting: At the end of the 90% High Burn test, push the rod all the way in until the stop on the primary air control rod touches the side of the stove. The PAC should be open 5/16″.

DOOR:

KS Cold Start: Once the fuel pile has been ignited, close the door to a cracked open position of about 1/8 to 1/16″ open until it is certain the fuel pile will keep burning. Then close the door. If the fire starts to falter/ die back, immediately reopen the door to the cracked open position for 15-30 seconds to get the fire going again. Close the door once the fire has reestablished itself. Typically the door can be closed 30 plus seconds after ignition.

High, Medium and Low Burns: Close the door as soon as the High, Medium or Low Burn fuel load has been loaded. If the fuel is slow to ignite, reopen the door to the cracked open position to get the fire going. Once the fire is going, close the door.

COAL BED:

KS/ High Burn Transition: At the end of KS Cold Start Segment, pull as many of the burning coals forward as possible, leveling the coal bed. Make certain that any E/W pieces that are still "solid" are rotated 90 degrees and nestled between the pieces that are parallel to the sides.

High/ Medium Transition: At the end of the High Burn test, adjust the PAC setting to the Medium Burn setting. As soon as possible after the end of the High Burn, rake the coal bed and pull all of the residual High burn fuel as close as possible to in front of the LPAO. At the start of the Medium Burn test, open the door and level the coal bed, pulling as many hot/ orange/ red coals forward to in front of the Lower Primary Air Orifice (LPAO) as possible.

High/ Low Transition: At the end of the 90% High Burn test adjust the PAC setting to the Low Burn setting. As soon as possible after the end of the High Burn, rake the coal bed and pull all of the residual High burn fuel as close as possible to in front of the LPAO. At the start of the Low Burn test, open the door and level the coal bed, pulling as many hot/ orange/ red coals forward to in front of the Lower Primary Air Orifice (LPAO) as possible.

LOWER PRIMARY AIR ORIFICE (LPAO):

Always clean the coals away from in front of the holes in the LPAO after the fuel has been loaded.

FAN:

Kindling Cold Start Segment: Leave Fan off for the entire segment.

High Burn Test: Turn the fan on High @ 5:00 into the test.

Medium and Low Burn Tests: Turn the fan off at the start of the test. Turn the fan on Low @ 30 minutes into the test.

BYPASS:

Kindling Cold Start Segment: Leave the bypass open for the first 15 minutes.

High, Medium and Low Burn Tests: Opening the bypass when adjusting the coal bed before and when loading the High, Medium and Low burn fuel loads is optional.

High, Medium and Low Burns: Close the door as soon as the High, Medium or Low Burn fuel load has been loaded. If the fuel is slow to ignite, reopen the door to the cracked open position to get the fire going. Once the fire is going, close the door.

COAL BED:

KS/ High Burn Transition: At the end of KS Cold Start Segment, pull as many of the burning coals forward as possible, leveling the coal bed. Make certain that any E/W pieces that are still "solid" are rotated 90 degrees and nestled between the pieces that are parallel to the sides.

High/ Medium Transition: At the end of the High Burn test, adjust the PAC setting to the Medium Burn setting. As soon as possible after the end of the High Burn, rake the coal bed and pull all of the residual High burn fuel as close as possible to in front of the LPAO. At the start of the Medium Burn test, open the door and level the coal bed, pulling as many hot/ orange/ red coals forward to in front of the Lower Primary Air Orifice (LPAO) as possible.

High/ Low Transition: At the end of the 90% High Burn test adjust the PAC setting to the Low Burn setting. As soon as possible after the end of the High Burn, rake the coal bed and pull all of the residual High burn fuel as close as possible to in front of the LPAO. At the start of the Low Burn test, open the door and level the coal bed, pulling as many hot/ orange/ red coals forward to in front of the Lower Primary Air Orifice (LPAO) as possible.

LOWER PRIMARY AIR ORIFICE (LPAO):

Always clean the coals away from in front of the holes in the LPAO after the fuel has been loaded.

FAN:

Kindling Cold Start Segment: Leave Fan off for the entire segment.

High Burn Test: Turn the fan on High @ 5:00 into the test.

Medium and Low Burn Tests: Turn the fan off at the start of the test. Turn the fan on Low @ 30 minutes into the test.

BYPASS:

Kindling Cold Start Segment: Leave the bypass open for the first 15 minutes.

High, Medium and Low Burn Tests: Opening the bypass when adjusting the coal bed before and when loading the High, Medium and Low burn fuel loads is optional.

FUEL LOADS:

KS Cold Start:

ALWAYS use a Top Down start fuel configuration with the smallest fuel pieces at the top of the fuel pile. Load all of the Kindling and Start-Up fuel into the stove prior to ignition. Always load the smaller pieces in the Kindling and Start-Up fuel on top of the larger pieces in the Kindling and Start-Up fuel. And always load the Kindling pieces on top of the Start-Up fuel. There should be 2 layers (6-8 pieces) in the Start-Up fuel and 4-5 layers in the Kindling fuel. The Kindling fuel pieces should become larger in each layer, small on top, larger below.

High, Medium and Low Burns:

Prior to actual loading, lay the pieces out on the floor, look at them and determine the best way to load them into the stove. Try to load the larger pieces in each fuel load against the 2 outside walls and then place a smaller piece on top of the larger pieces. Use the natural configuration of the fuel pieces to keep them in position. The smallest piece, or one of the smallest pieces, in the fuel load should be loaded in the middle of the stove. Try to leave a gap on each side of the piece in the center to allow flames to reach the baffle and ignite the secondaries.

If you have any questions, feel free to contact me anytime.

Mark Freeman
KUMA Stoves

2.2 - Test Data by Run

Run 1 Notes & Results
Run 2 Notes & Results
Run 3 Notes
Run 4 Notes & Results
Run 5 (pre) Notes
Run 5 Notes & Results
Run 6 (pre) Notes
Run 6 Notes & Results

2" AC Metal Cat

Wood Heater Aging Data
Woodstove Test Data Sheet #25
WST 5-Form 3, Rev 1/15

Unit: Kuma Hiden
Date: 1/28/19 - 2/19/19
Technicians: [illegible]
Page : 1 of 2

	Hr. #	2019 Date	Time	Firebox Temp (T/C# 7)	Stack @ 8' (T/C# 1)	Pre Cat (T/C# 20)	Post Cat (T/C# 21)	Comments (Bypass Closed @ 1007)
76	1	1/28	1107	695	394	1053	938	Fire Started @ 952
136	2		1207	800	370	1001	906	Load 1 Added 10:11
196	3		1307	906	297	1180	1014	Load 2 Added 11:09
256	4		1407	769	395	1138	1009	Load 3 Added @ 12:30
316	5		1507	769	346	840	839	Load 4 Added @ 13:42
376	6		1607	1055	439	1368	1168	Load 5 Added @ 15:20
436	7		1707	1045	350	862	842	Load 6 Added @ 16:24
	8		1807	716	299	629	661	
	9		1907	499	233	441	473	
107	10	1/29	1245	508	480	1210	1093	Fire Started @ 1130
167	11		1345	725	442	1231	1051	Bypass Closed @ 1145
222	12		1520	677	171	572	576	Load 7 added @ 1230
	13		1620	323	222	663	786	Load 8 Added @ 1520
	14		1720	292	252	894	997	
	15		1820	306	251	940	1032	
	16		1920	323	219	778	866	
	17	1/31	1411	488	428	562	631	Fire Started @ 1256
	18		1511	757	396	1265	1037	Bypass Closed @ 1311
	19		1611	348	337	787	806	Load 9 Added @ 1406
	20	2/1	1445	557	394	888	996	Fire Started @ 1330
	21		1545	520	392	1133	968	Bypass Closed @ 1345
	22		1645	618	365	979	910	Load 10 Added @ 1435
	23	2/8	1205	488	419	1255	1050	Fire Started @ 1050
	24		1305	525	402	1091	969	Bypass Closed @ 1105
	25		1405	463	365	844	866	Load 11 Added @ 1155
	26		1505	487	244	513	521	Load 12 Added @ 1500
	27		1605	340	249	662	895	
	28		1705	287	246	909	932	
	29		1805	306	209	691	764	

Operated for 50 hours at a medium burn rate using fuel with a moisture content from 18 - 28%.

Wood Heater Aging Data
Woodstove Test Data Sheet #25
WST 5-Form 3, Rev 1/15

Unit: Kuma Aspen
Date: 1/29/19 - 2/19/19
Technicians: ADH | [illegible]
Page : 2 of 2

T/C# 7 1 20 21

Hr. #	2019 Date	Time	Firebox Temp	Stack @ 8'	Pre Cat	Post Cat	Comments
32	2/8	1905	358	211	728	836	
31	↓	2005	398	176	604	664	
32		2105	437	163	544	517	
33		2205	534	161	548	677	
34		2105	689	160	542	626	
35		2205	705	148	457	551	
36	↓	2305	509	143	427	524	
37	2/18	1230	401	477	1021	1049	Fire Started @ 1118
38	↑	1330	873	437	1185	995	Bypass Closed @ 1130
39		1430	674	199	634	621	Load 13 added @ 1200
40		1530	491	280	832	900	Load 14 added @ 1455
41		1630	377	281	881	1030	
42		1730	374	249	778	908	
43		1830	396	240	814	834	
44		1930	305	356	653	649	
45		2030	378	187	639	710	
46		2130	547	178	630	685	
47		2230	606	158	529	584	
48	↓	2330	550	144	430	487	
49	2/19	0030	531	141	411	497	
50	↓	130	461	136	372	465	
51	↓	230	336	121	300	355	

Operated for 50 hours at a medium burn rate using fuel moisture from 18 - 28%.

Run 1

High Burn 1-minute data

Emissions Results (Cold to Hot Cycle)

Wood Heater Test Data
Hign Burn Emissions Data

Run: 1

Manufacturer: Kuma Stoves
Model: Aspen LE
Tracking No.: 2357
Project No.: 0123WM011E
Test Date: 26-Feb-19
Beginning Clock Time: 11:11

Total Sampling Time: 208 min
Recording Interval: 1 min
Background Sample Volume: 30.432 cubic feet

Meter Box Y Factor: 1.009 (1) 0.996 (2) 0.998 (Amb)

Barometric Pressure:	Begin	Middle	End	Average	
	28.50	28.49	28.47	28.49	0

OMNI Equipment Numbers:

PM Control Modules: 371, 372
Dilution Tunnel MW(dry): 29.00 lb/lb-mole
Dilution Tunnel MW(wet): 28.78 lb/lb-mole
Dilution Tunnel H2O: 2.00 percent
Dilution Tunnel Static: -0.109 "H2O
Tunnel Area: 0.19635 ft2
Pitot Tube Cp: 0.99

Avg. Tunnel Velocity: 18.52 ft/sec.
Initial Tunnel Flow: 199.6 scfm
Average Tunnel Flow: 188.6 scfm
Post-Test Leak Check (1): 0.000 cfm @ 10 in. Hg
Post-Test Leak Check (2): 0.000 cfm @ 10 in. Hg
Average Test Piece Fuel Moisture: 19.22 Dry Basis %

Technician Signature:

Velocity Traverse Data	Pt.1	Pt.2	Pt.3	Pt.4	Pt.5	Pt.6	Pt.7	Pt.8	Center	
Initial dP	0.070	0.078	0.074	0.074	0.068	0.078	0.072	0.064	0.072	"H2O
Temp:	73	73	73	73	73	73	73	73	72	°F

V_{strav} 18.33 ft/sec V_{scent} 18.29 ft/sec F_p 1.002

	Particulate Sampling Data														Fuel Weight (lb)		Temperature Data (°F)													Stack Gas Data		
Elapsed Time (min)	Gas Meter 1 (ft^3)	Gas Meter 2 (ft^3)	Sample Rate 1 (cfm)	Sample Rate 2 (cfm)	Orifice dH 1 ("H_2O)	Meter 1 Temp (°F)	Meter 1 Vacuum ("Hg)	Orifice dH 2 ("H_2O)	Meter 2 Temp (°F)	Meter 2 Vacuum ("Hg)	Dilution Tunnel (°F)	Dilution Tunnel Center dP	Pro. Rate 1	Pro. Rate 2	Scale Reading	Weight Change	Firebox Top	Firebox Bottom	Firebox Back	Firebox Left	Firebox Right	Avg. Stove Surface	Catalyst Exit	Stack	Filter 1	Dryer Exit 1	Filter 2	Dryer Exit 2	Ambient	Draft ("H_2O)	CO_2 (%)	CO (%)
0	0.000	0.000			1.96	60	-1.19	2.00	59	-1.4	75	0.070			8.4		61	55	54	56	56	56	60	68	83	49	83	49	60	0.002	0.12	-0.01
1	0.135	0.156	0.14	0.16	1.80	60	-1.26	1.49	60	-1.7	76	0.070	89	94	8.3	-0.1	62	55	54	56	56	57	86	106	79	49	87	49	61	-0.015	0.54	0.05
2	0.280	0.316	0.15	0.16	1.77	60	-0.78	1.48	60	-1.8	77	0.070	96	97	8.3	-0.1	66	55	54	56	57	58	129	131	79	49	88	49	61	-0.023	3.06	0.37
3	0.426	0.474	0.15	0.16	1.83	60	-1.08	1.52	60	-1.8	82	0.070	97	96	8.2	-0.1	73	56	54	57	57	59	177	223	81	49	86	49	61	-0.047	5.71	0.52
4	0.572	0.635	0.15	0.16	1.81	60	-1.13	1.50	60	-1.9	82	0.070	97	98	8.1	-0.1	82	57	54	58	58	62	245	264	84	49	80	49	61	-0.044	6.78	0.44
5	0.718	0.795	0.15	0.16	1.78	60	-1.02	1.50	60	-1.7	84	0.070	97	97	8.0	0.0	90	58	54	60	60	64	288	269	86	49	76	49	61	-0.048	6.26	0.43
6	0.864	0.954	0.15	0.16	1.77	60	-0.98	1.49	60	-1.8	86	0.070	97	97	8.0	-0.1	99	60	55	62	63	68	305	298	87	49	74	50	62	-0.054	6.18	0.41
7	1.010	1.113	0.15	0.16	1.88	60	-1.39	1.47	60	-2	88	0.070	97	97	7.9	-0.1	109	62	55	64	65	71	330	332	88	49	74	50	61	-0.056	6.27	0.28
8	1.159	1.272	0.15	0.16	1.86	61	-1.02	1.47	60	-2	89	0.070	99	97	7.8	-0.1	120	65	55	67	68	75	340	327	89	49	76	50	62	-0.055	5.9	0.27
9	1.308	1.430	0.15	0.16	1.86	61	-1.07	1.47	60	-1.9	90	0.070	99	97	7.7	-0.1	130	68	55	70	72	79	346	322	89	50	80	50	61	-0.056	5.55	0.31
10	1.456	1.589	0.15	0.16	1.84	61	-1.34	1.49	60	-1.9	89	0.070	99	97	7.6	-0.1	141	72	55	73	75	83	357	319	88	50	84	50	61	-0.055	5.57	0.26
11	1.604	1.749	0.15	0.16	1.84	61	-1.39	1.50	60	-2.1	90	0.070	99	98	7.5	-0.1	151	76	55	76	79	87	364	312	88	50	87	50	62	-0.054	5.44	0.29
12	1.752	1.909	0.15	0.16	1.82	61	-0.9	1.49	60	-2.1	92	0.070	99	98	7.4	-0.1	159	80	55	79	82	91	368	321	88	50	88	50	63	-0.058	5.33	0.35
13	1.899	2.068	0.15	0.16	1.82	61	-1.2	1.48	60	-1.9	94	0.070	98	98	7.3	-0.1	168	84	56	83	86	95	384	338	88	50	84	50	63	-0.060	5.5	0.33
14	2.046	2.228	0.15	0.16	1.80	61	-1.01	1.48	60	-1.8	97	0.070	99	98	7.2	-0.1	178	88	56	86	90	100	411	375	88	50	81	50	63	-0.066	6.1	0.28
15	2.193	2.387	0.15	0.16	1.80	61	-0.93	1.48	61	-1.9	101	0.070	99	98	7.1	-0.1	190	93	56	90	94	105	445	421	88	50	82	50	61	-0.071	7.08	0.21
16	2.339	2.545	0.15	0.16	1.80	61	-1.18	1.46	61	-1.9	94	0.070	98	97	8.2	1.1	203	98	56	94	97	110	659	351	87	50	85	50	61	-0.060	8.03	0.29
17	2.485	2.702	0.15	0.16	1.79	61	-0.9	1.40	61	-1.7	95	0.070	98	96	6.9	-1.3	224	104	57	98	101	117	775	355	87	50	88	50	61	-0.061	8.7	0.07
18	2.631	2.855	0.15	0.15	1.78	61	-1.17	1.38	61	-1.8	96	0.070	98	94	6.8	-0.1	243	111	57	103	106	124	773	366	87	50	91	51	61	-0.063	9.07	0.05
19	2.777	3.009	0.15	0.15	1.78	61	-1.21	1.38	61	-1.7	95	0.070	98	94	6.6	-0.1	261	118	57	108	111	131	753	372	87	50	93	51	63	-0.064	8.98	0.03
20	2.922	3.163	0.15	0.15	1.77	61	-1.19	1.50	61	-2.1	96	0.060	105	102	6.6	-0.1	275	127	58	114	116	138	740	369	87	50	90	51	63	-0.064	9.12	0.02
21	3.067	3.322	0.15	0.16	1.81	61	-1.02	1.49	61	-2.1	96	0.070	97	98	6.5	-0.1	287	135	58	120	121	144	713	365	87	50	85	51	62	-0.064	8.42	0.01
22	3.213	3.482	0.15	0.16	1.81	62	-1.38	1.48	61	-2.1	97	0.070	98	98	6.3	-0.1	299	144	59	126	126	151	750	373	87	51	83	51	62	-0.065	9.1	0.03
23	3.359	3.641	0.15	0.16	1.80	62	-0.96	1.48	61	-2	98	0.070	98	98	6.2	-0.1	310	153	59	132	132	157	738	376	87	51	84	51	62	-0.065	8.77	0.01
24	3.505	3.799	0.15	0.16	1.80	62	-0.98	1.47	61	-2.2	98	0.070	98	97	6.1	-0.1	321	163	60	139	137	164	735	378	87	51	85	51	62	-0.066	8.6	0.01
25	3.651	3.958	0.15	0.16	1.79	62	-1.13	1.45	61	-2.1	99	0.070	98	98	6.0	-0.1	330	173	60	145	143	170	738	379	87	51	86	51	62	-0.067	8.52	0.01
26	3.799	4.118	0.15	0.16	1.86	62	-1.13	1.49	61	-2.2	99	0.070	99	98	5.9	-0.1	339	182	61	150	148	176	728	383	87	51	88	51	62	-0.066	8.88	0.01
27	3.948	4.277	0.15	0.16	1.85	62	-1.33	1.50	61	-2	100	0.070	100	98	5.8	-0.1	347	192	62	156	153	182	726	382	87	51	89	51	63	-0.067	8.54	0.01
28	4.096	4.437	0.15	0.16	1.84	62	-1.24	1.48	61	-2.3	100	0.060	107	106	5.7	-0.1	354	202	63	162	159	188	720	383	88	51	87	51	63	-0.067	8.45	0.01
29	4.243	4.597	0.15	0.16	1.84	62	-1.44	1.49	62	-2.3	101	0.070	99	98	5.6	-0.1	362	212	65	168	164	194	727	389	88	51	83	52	64	-0.068	9	0.01
30	4.391	4.756	0.15	0.16	1.83	62	-1.38	1.48	62	-2.1	101	0.070	99	98	5.4	-0.1	370	221	66	173	170	200	729	392	88	51	80	52	63	-0.068	9.25	0.01
31	4.539	4.915	0.15	0.16	1.82	62	-1.25	1.47	62	-2.3	102	0.070	100	98	5.3	-0.1	378	231	68	179	175	206	767	397	88	51	81	52	63	-0.069	9.28	0.01
32	4.686	5.074	0.15	0.16	1.81	62	-1.45	1.53	62	-2.2	102	0.070	99	98	5.2	-0.1	388	241	70	185	180	213	788	404	88	51	83	52	63	-0.070	9.66	0.02
33	4.833	5.235	0.15	0.16	1.80	62	-1.5	1.52	62	-2.3	104	0.070	99	99	5.1	-0.1	397	250	73	191	185	219	794	408	88	51	85	52	63	-0.070	9.94	0.01
34	4.979	5.397	0.15	0.16	1.79	62	-1.42	1.50	62	-2.5	103	0.070	98	100	4.9	-0.1	408	260	76	197	190	226	806	415	88	51	87	52	63	-0.071	10.21	0.02

Wood Heater Test Data
Hign Burn Emissions Data

Run: 1

Manufacturer: Kuma Stoves
Model: Aspen LE
Tracking No.: 2357
Project No.: 0123WM011E
Test Date: 26-Feb-19
Beginning Clock Time: 11:11

Total Sampling Time: 208 min
Recording Interval: 1 min
Background Sample Volume: 30.432 cubic feet

Meter Box Y Factor: 1.009 (1) 0.996 (2) 0.998 (Amb)

Barometric Pressure:	Begin	Middle	End	Average	
	28.50	28.49	28.47	28.49	0

OMNI Equipment Numbers:

PM Control Modules: 371, 372
Dilution Tunnel MW(dry): 29.00 lb/lb-mole
Dilution Tunnel MW(wet): 28.78 lb/lb-mole
Dilution Tunnel H2O: 2.00 percent
Dilution Tunnel Static: -0.109 "H2O
Tunnel Area: 0.19635 ft2
Pitot Tube Cp: 0.99

Avg. Tunnel Velocity: 18.52 ft/sec.
Initial Tunnel Flow: 199.6 scfm
Average Tunnel Flow: 188.6 scfm
Post-Test Leak Check (1): 0.000 cfm @ 10 in. Hg
Post-Test Leak Check (2): 0.000 cfm @ 10 in. Hg
Average Test Piece Fuel Moisture: 19.22 Dry Basis %

Technician Signature:

Velocity Traverse Data	Pt.1	Pt.2	Pt.3	Pt.4	Pt.5	Pt.6	Pt.7	Pt.8	Center	
Initial dP	0.070	0.078	0.074	0.074	0.068	0.078	0.072	0.064	0.072	"H2O
Temp:	73	73	73	73	73	73	73	73	72	°F

V_{strav} 18.33 ft/sec V_{scent} 18.29 ft/sec F_p 1.002

	Particulate Sampling Data														Fuel Weight (lb)		Temperature Data (°F)													Stack Gas Data		
Elapsed Time (min)	Gas Meter 1 (ft^3)	Gas Meter 2 (ft^3)	Sample Rate 1 (cfm)	Sample Rate 2 (cfm)	Orifice dH 1 ("H_2O)	Meter 1 Temp (°F)	Meter 1 Vacuum ("Hg)	Orifice dH 2 ("H_2O)	Meter 2 Temp (°F)	Meter 2 Vacuum ("Hg)	Dilution Tunnel (°F)	Dilution Tunnel Center dP	Pro. Rate 1	Pro. Rate 2	Scale Reading	Weight Change	Firebox Top	Firebox Bottom	Firebox Back	Firebox Left	Firebox Right	Avg. Stove Surface	Catalyst Exit	Stack	Filter 1	Dryer Exit 1	Filter 2	Dryer Exit 2	Ambient	Draft ("H_2O)	CO_2 (%)	CO (%)
35	5.125	5.557	0.15	0.16	1.78	63	-1.48	1.49	62	-2.5	105	0.070	98	99	4.8	-0.1	417	269	79	203	195	233	802	418	88	51	88	52	63	-0.070	10	0.02
36	5.271	5.717	0.15	0.16	1.79	63	-1.25	1.50	62	-2.5	104	0.070	98	99	4.7	-0.1	425	278	83	209	200	239	802	419	88	52	89	52	63	-0.067	10.03	0.01
37	5.417	5.877	0.15	0.16	1.79	63	-1.46	1.49	62	-2.4	106	0.060	106	107	4.6	-0.1	433	287	87	215	206	246	813	422	89	52	89	53	63	-0.067	9.94	0.01
38	5.562	6.036	0.15	0.16	1.79	63	-1.41	1.47	62	-2.2	107	0.070	98	98	4.5	-0.1	441	296	91	221	211	252	816	423	88	52	89	53	64	-0.067	9.67	0.01
39	5.707	6.196	0.15	0.16	1.76	63	-1.47	1.49	62	-2.3	106	0.070	98	99	4.4	-0.1	447	304	96	227	216	258	815	424	88	52	89	53	63	-0.068	9.56	0.01
40	5.852	6.355	0.15	0.16	1.78	63	-1.46	1.48	62	-2.3	106	0.070	98	98	4.2	-0.1	452	312	102	233	222	264	831	424	88	52	88	53	64	-0.069	9.64	0.02
41	5.997	6.513	0.15	0.16	1.76	63	-1.42	1.46	62	-2.3	108	0.060	106	106	4.1	-0.1	460	320	107	238	227	270	848	428	87	52	88	53	63	-0.068	10	0.02
42	6.145	6.675	0.15	0.16	1.84	63	-1.63	1.51	63	-2.4	108	0.070	100	100	4.0	-0.1	467	328	113	243	232	277	849	432	87	52	87	53	63	-0.070	9.89	0.01
43	6.292	6.835	0.15	0.16	1.84	63	-1.25	1.51	63	-2.4	108	0.070	99	99	3.9	-0.1	473	336	119	249	237	283	846	432	88	52	87	53	63	-0.070	9.28	0.01
44	6.440	6.997	0.15	0.16	1.83	63	-1.26	1.49	63	-2.6	109	0.070	100	100	3.8	-0.1	478	343	125	254	242	288	860	434	87	52	87	53	63	-0.072	9.28	0.02
45	6.587	7.158	0.15	0.16	1.82	64	-1.66	1.49	63	-2.6	110	0.070	99	100	3.6	-0.1	483	351	132	259	247	294	861	437	88	52	88	54	64	-0.072	9.58	0.02
46	6.734	7.318	0.15	0.16	1.83	64	-1.69	1.51	63	-2.7	109	0.070	99	99	3.6	-0.1	488	357	138	263	251	299	885	439	88	52	89	54	63	-0.072	9.54	0.02
47	6.881	7.479	0.15	0.16	1.82	64	-1.52	1.50	63	-2.5	111	0.070	99	100	3.5	-0.1	493	364	144	268	256	305	900	442	88	52	89	54	67	-0.070	9.4	0.02
48	7.028	7.640	0.15	0.16	1.81	64	-1.67	1.49	63	-2.4	110	0.070	99	100	3.3	-0.1	499	369	150	272	260	310	902	443	88	53	89	54	66	-0.070	9.28	0.02
49	7.174	7.800	0.15	0.16	1.81	64	-1.52	1.50	63	-2.7	109	0.070	98	99	3.2	-0.1	505	375	156	276	264	315	916	445	88	53	89	54	64	-0.070	9.19	0.02
50	7.321	7.960	0.15	0.16	1.80	64	-1.25	1.49	63	-2.5	109	0.070	99	99	3.1	-0.1	510	380	161	280	268	320	932	447	88	53	89	54	64	-0.069	9.29	0.02
51	7.467	8.120	0.15	0.16	1.79	64	-1.26	1.48	63	-2.7	111	0.070	99	99	3.0	-0.1	515	384	166	283	272	324	916	445	88	53	89	54	64	-0.070	9.37	0.01
52	7.613	8.280	0.15	0.16	1.79	64	-1.64	1.48	63	-2.7	112	0.070	99	99	2.9	-0.1	518	388	171	287	276	328	901	442	88	53	89	54	64	-0.069	9.51	0.01
53	7.759	8.439	0.15	0.16	1.76	64	-1.49	1.49	63	-2.5	112	0.070	99	99	2.9	0.0	521	391	176	290	280	332	903	442	88	53	89	54	66	-0.069	9.45	0.01
54	7.904	8.600	0.15	0.16	1.77	64	-1.73	1.48	63	-2.6	112	0.070	98	100	2.7	-0.1	524	395	181	294	283	335	915	443	88	53	89	54	66	-0.070	9.37	0.01
55	8.049	8.758	0.15	0.16	1.78	64	-1.71	1.48	63	-2.5	110	0.070	98	98	2.6	-0.1	527	399	188	298	287	340	923	445	88	53	88	54	65	-0.070	9.52	0.01
56	8.194	8.918	0.15	0.16	1.77	64	-1.75	1.48	64	-2.7	111	0.070	98	99	2.5	-0.1	531	402	194	301	290	344	939	445	88	53	88	54	65	-0.070	9.61	0.01
57	8.340	9.078	0.15	0.16	1.75	64	-1.28	1.46	64	-2.5	112	0.070	99	99	2.4	-0.1	535	406	201	305	293	348	943	446	88	53	87	54	66	-0.069	9.73	0.01
58	8.485	9.236	0.15	0.16	1.74	64	-1.44	1.47	64	-2.5	110	0.060	106	105	2.3	-0.1	537	410	207	309	296	352	932	445	88	53	87	55	65	-0.069	9.65	0
59	8.629	9.396	0.14	0.16	1.75	65	-1.64	1.48	64	-2.7	112	0.070	97	99	2.3	0.0	540	414	214	313	299	356	931	444	88	53	87	55	65	-0.069	9.67	0
60	8.774	9.556	0.15	0.16	1.83	65	-1.22	1.47	64	-2.7	111	0.070	98	99	2.2	-0.1	541	417	221	316	302	359	933	445	88	53	86	55	66	-0.069	10.02	0
61	8.931	9.714	0.16	0.16	1.98	65	-1.52	1.48	64	-2.5	112	0.070	106	98	2.0	-0.2	543	421	227	320	305	363	934	447	87	54	86	55	67	-0.069	10.45	0
62	9.084	9.872	0.15	0.16	1.96	65	-1.18	1.46	64	-2.5	182	0.060	118	112	16.5	14.5	541	425	245	324	305	368	654	516	88	54	87	55	66	-0.070	7.76	0.09
63	9.232	10.033	0.15	0.16	1.79	65	-0.92	1.51	64	-3	125	0.060	109	109	16.3	-0.2	526	429	251	328	308	368	633	418	87	54	87	55	66	-0.067	4.35	0.29
64	9.378	10.193	0.15	0.16	1.79	65	-1.02	1.48	64	-2.9	118	0.060	107	108	16.1	-0.2	523	432	257	331	310	371	841	430	85	54	86	55	66	-0.070	8.4	0.03
65	9.523	10.352	0.15	0.16	1.78	65	-0.91	1.46	64	-3.2	119	0.060	106	107	16.0	-0.1	523	434	263	334	314	374	900	441	84	54	86	55	66	-0.072	9.66	0.04
66	9.669	10.513	0.15	0.16	1.78	65	-0.91	1.51	64	-3.1	117	0.060	107	108	15.8	-0.1	525	435	270	337	316	377	935	448	84	54	86	55	66	-0.073	10.47	0.03
67	9.816	10.673	0.15	0.16	1.83	65	-1.44	1.49	64	-3.2	115	0.060	107	107	15.6	-0.2	507	427	275	338	318	373	961	453	84	54	87	55	65	-0.074	11.48	0.03
68	9.963	10.833	0.15	0.16	1.82	65	-1	1.48	64	-3.2	115	0.060	107	107	15.5	-0.1	501	414	280	340	320	371	974	453	84	54	88	55	67	-0.074	11.83	0.03
69	10.110	10.993	0.15	0.16	1.82	65	-1.15	1.53	64	-3.3	115	0.060	107	107	15.3	-0.2	495	406	284	340	322	369	988	453	84	54	89	55	68	-0.073	11.83	0.04

Wood Heater Test Data
Hign Burn Emissions Data

Run: 1

Manufacturer: Kuma Stoves
Model: Aspen LE
Tracking No.: 2357
Project No.: 0123WM011E
Test Date: 26-Feb-19
Beginning Clock Time: 11:11

Total Sampling Time: 208 min
Recording Interval: 1 min
Background Sample Volume: 30.432 cubic feet

Meter Box Y Factor: 1.009 (1) 0.996 (2) 0.998 (Amb)

Barometric Pressure:	Begin	Middle	End	Average	
	28.50	28.49	28.47	28.49	0

OMNI Equipment Numbers:

PM Control Modules: 371, 372
Dilution Tunnel MW(dry): 29.00 lb/lb-mole
Dilution Tunnel MW(wet): 28.78 lb/lb-mole
Dilution Tunnel H2O: 2.00 percent
Dilution Tunnel Static: -0.109 "H2O
Tunnel Area: 0.19635 ft2
Pitot Tube Cp: 0.99

Avg. Tunnel Velocity: 18.52 ft/sec.
Initial Tunnel Flow: 199.6 scfm
Average Tunnel Flow: 188.6 scfm
Post-Test Leak Check (1): 0.000 cfm @ 10 in. Hg
Post-Test Leak Check (2): 0.000 cfm @ 10 in. Hg
Average Test Piece Fuel Moisture: 19.22 Dry Basis %

Technician Signature:

Velocity Traverse Data	Pt.1	Pt.2	Pt.3	Pt.4	Pt.5	Pt.6	Pt.7	Pt.8	Center	
Initial dP	0.070	0.078	0.074	0.074	0.068	0.078	0.072	0.064	0.072	"H2O
Temp:	73	73	73	73	73	73	73	73	72	°F

V_{strav} 18.33 ft/sec V_{scent} 18.29 ft/sec F_p 1.002

	Particulate Sampling Data														Fuel Weight (lb)		Temperature Data (°F)												Stack Gas Data		
Elapsed Time (min)	Gas Meter 1 (ft^3)	Gas Meter 2 (ft^3)	Sample Rate 1 (cfm)	Sample Rate 2 (cfm)	Orifice dH 1 ("H_2O)	Meter 1 Temp (°F)	Meter 1 Vacuum ("Hg)	Orifice dH 2 ("H_2O)	Meter 2 Temp (°F)	Meter 2 Vacuum ("Hg)	Dilution Tunnel (°F)	Dilution Tunnel Center dP	Pro. Rate 1	Pro. Rate 2	Scale Reading	Weight Change	Firebox Top	Firebox Bottom	Firebox Back	Firebox Left	Firebox Right	Avg. Stove Surface	Catalyst Exit	Stack	Filter 1	Dryer Exit 1	Filter 2	Dryer Exit 2	Ambient	Draft ("H_2O)	CO_2 (%)	CO (%)
70	10.257	11.156	0.15	0.16	1.82	65	-1.14	1.51	64	-3.6	114	0.060	107	109	15.2	-0.2	491	396	287	341	324	368	995	452	84	54	90	55	67	-0.073	11.89	0.03
71	10.404	11.317	0.15	0.16	1.81	65	-1.33	1.50	65	-3.3	115	0.060	107	108	15.0	-0.1	488	388	289	342	326	367	997	454	85	54	90	55	67	-0.074	12.36	0.02
72	10.552	11.478	0.15	0.16	1.81	66	-1.02	1.51	65	-3.6	114	0.070	100	100	14.9	-0.2	488	379	291	342	328	366	1012	455	85	54	91	56	67	-0.075	13.27	0
73	10.699	11.638	0.15	0.16	1.81	66	-1.43	1.51	65	-3.6	114	0.060	107	107	14.7	-0.2	489	372	292	343	329	365	1012	456	85	54	88	56	68	-0.073	13.3	0
74	10.846	11.799	0.15	0.16	1.81	66	-1.33	1.49	65	-3.5	114	0.060	107	108	14.5	-0.2	490	365	293	344	331	365	1023	457	85	54	84	56	67	-0.074	13.4	0
75	10.993	11.960	0.15	0.16	1.81	66	-1.33	1.49	65	-3.5	113	0.060	107	108	14.4	-0.1	492	359	293	345	335	365	1023	457	85	55	82	56	67	-0.076	13.32	0.01
76	11.140	12.120	0.15	0.16	1.80	66	-1.2	1.49	65	-3.6	114	0.060	107	107	14.2	-0.2	493	354	293	346	336	364	1016	457	85	55	82	56	68	-0.076	13.07	0.02
77	11.287	12.280	0.15	0.16	1.81	66	-1.18	1.48	65	-3.6	114	0.060	107	107	14.1	-0.1	494	349	293	347	338	364	1012	456	85	55	84	56	67	-0.078	12.9	0.02
78	11.434	12.439	0.15	0.16	1.81	66	-1.18	1.47	65	-3.6	115	0.060	107	106	14.0	-0.2	494	345	292	348	340	364	1013	457	86	55	86	56	67	-0.077	12.64	0.03
79	11.581	12.598	0.15	0.16	1.79	66	-1.42	1.47	65	-3.7	115	0.060	107	106	13.8	-0.1	495	341	291	349	341	363	1013	457	86	55	87	56	68	-0.077	12.38	0.04
80	11.728	12.758	0.15	0.16	1.81	66	-0.96	1.46	65	-3.7	115	0.060	107	107	13.7	-0.2	496	338	290	349	343	363	1012	458	86	55	88	56	66	-0.078	12.3	0.03
81	11.875	12.916	0.15	0.16	1.81	66	-1.15	1.46	65	-3.4	115	0.070	99	98	13.5	-0.2	496	335	289	350	345	363	1018	459	86	55	88	56	68	-0.077	12.18	0.05
82	12.022	13.074	0.15	0.16	1.79	66	-0.99	1.46	65	-3.6	116	0.070	99	98	13.4	-0.1	496	332	289	351	347	363	1013	458	87	55	88	56	67	-0.076	12.13	0.04
83	12.169	13.233	0.15	0.16	1.81	66	-1.41	1.47	65	-3.5	114	0.060	107	106	13.2	-0.1	495	330	288	351	348	362	1011	458	87	55	86	56	68	-0.077	11.98	0.04
84	12.315	13.393	0.15	0.16	1.80	66	-1.11	1.47	65	-3.8	116	0.060	107	107	13.1	-0.1	495	328	287	352	350	362	1014	457	87	55	85	56	68	-0.076	11.91	0.04
85	12.462	13.552	0.15	0.16	1.79	66	-0.98	1.47	65	-3.8	114	0.060	107	106	13.0	-0.1	494	326	286	352	351	362	1015	457	87	55	84	56	68	-0.076	11.86	0.04
86	12.609	13.712	0.15	0.16	1.79	66	-0.98	1.51	66	-3.8	115	0.060	107	107	12.8	-0.1	493	325	285	353	352	362	1014	458	87	55	84	56	68	-0.076	11.77	0.05
87	12.756	13.874	0.15	0.16	1.81	66	-1.14	1.50	66	-3.8	115	0.060	107	108	12.7	-0.1	491	323	285	353	354	361	1004	455	88	55	83	57	68	-0.076	11.78	0.03
88	12.903	14.035	0.15	0.16	1.80	66	-1.02	1.50	66	-4	114	0.070	99	99	12.6	-0.1	489	322	284	354	355	361	996	453	88	55	83	57	68	-0.076	11.81	0.03
89	13.049	14.195	0.15	0.16	1.79	67	-1.23	1.49	66	-3.8	114	0.070	98	99	12.4	-0.2	488	320	284	355	356	361	997	452	88	55	84	57	70	-0.076	11.81	0.03
90	13.196	14.356	0.15	0.16	1.81	67	-1.11	1.48	66	-3.8	114	0.070	99	99	12.3	-0.1	486	320	283	355	357	360	993	451	88	55	85	57	68	-0.076	11.77	0.02
91	13.343	14.516	0.15	0.16	1.80	67	-1.43	1.48	66	-4	114	0.070	99	99	12.2	-0.1	484	318	283	355	358	360	984	450	88	55	85	57	68	-0.075	11.72	0.02
92	13.490	14.675	0.15	0.16	1.79	67	-1.2	1.48	66	-3.8	115	0.070	99	98	12.0	-0.1	483	318	282	356	358	359	991	449	88	55	85	57	69	-0.075	11.79	0.02
93	13.637	14.834	0.15	0.16	1.80	67	-1.01	1.46	66	-4	115	0.070	99	98	11.9	-0.1	482	317	282	356	360	359	999	450	88	55	86	57	68	-0.075	11.82	0.02
94	13.784	14.994	0.15	0.16	1.80	67	-1.27	1.47	66	-4.2	114	0.070	99	99	11.8	-0.1	483	316	282	357	360	360	1016	453	88	55	86	57	69	-0.075	11.74	0.03
95	13.931	15.152	0.15	0.16	1.80	67	-1.16	1.46	66	-4	115	0.070	99	98	11.6	-0.1	485	316	281	357	361	360	1027	456	88	55	86	57	69	-0.076	11.6	0.04
96	14.079	15.313	0.15	0.16	1.86	67	-1.49	1.50	66	-4.2	114	0.070	100	99	11.5	-0.1	486	316	281	358	362	361	1025	457	88	56	86	57	68	-0.076	11.43	0.04
97	14.228	15.474	0.15	0.16	1.85	67	-1.27	1.49	66	-4.2	115	0.070	100	100	11.4	-0.1	486	316	281	358	362	361	1020	456	88	56	86	57	67	-0.076	11.28	0.04
98	14.378	15.633	0.15	0.16	1.85	67	-1.05	1.46	66	-4.5	115	0.070	101	98	11.3	-0.1	485	316	281	358	363	361	1020	457	88	56	86	57	69	-0.077	11.16	0.04
99	14.528	15.793	0.15	0.16	1.83	67	-1.21	1.49	66	-4.5	113	0.070	101	99	11.2	-0.1	485	316	280	358	364	361	1025	459	88	56	86	57	69	-0.076	11.08	0.05
100	14.677	15.953	0.15	0.16	1.84	67	-1.52	1.46	66	-4.8	115	0.070	100	99	11.0	-0.1	484	317	281	357	364	361	1023	457	88	56	86	57	69	-0.076	11.05	0.04
101	14.827	16.110	0.15	0.16	1.84	67	-1.42	1.43	66	-4.6	116	0.070	101	97	10.9	-0.1	483	317	280	357	365	360	1009	454	88	56	86	57	68	-0.076	11.11	0.03
102	14.976	16.266	0.15	0.16	1.85	67	-1.49	1.39	66	-4.9	114	0.070	100	96	10.8	-0.1	481	318	281	357	366	361	1004	454	88	56	86	57	69	-0.075	11.24	0.03
103	15.125	16.419	0.15	0.15	1.86	67	-1.41	1.36	67	-5	114	0.070	100	94	10.7	-0.1	479	318	281	357	366	360	1001	453	88	56	86	57	69	-0.075	11.43	0.02
104	15.273	16.580	0.15	0.16	1.85	67	-1.09	1.49	67	-5.5	113	0.070	100	99	10.6	-0.1	478	319	281	358	367	361	995	449	88	56	86	57	69	-0.075	11.7	0.01

Wood Heater Test Data
Hign Burn Emissions Data

Run: 1

Manufacturer: Kuma Stoves
Model: Aspen LE
Tracking No.: 2357
Project No.: 0123WM011E
Test Date: 26-Feb-19
Beginning Clock Time: 11:11

Total Sampling Time: 208 min
Recording Interval: 1 min
Background Sample Volume: 30.432 cubic feet

Meter Box Y Factor: 1.009 (1) 0.996 (2) 0.998 (Amb)

Barometric Pressure:	Begin	Middle	End	Average	
	28.50	28.49	28.47	28.49	0

OMNI Equipment Numbers:

PM Control Modules: 371, 372
Dilution Tunnel MW(dry): 29.00 lb/lb-mole
Dilution Tunnel MW(wet): 28.78 lb/lb-mole
Dilution Tunnel H2O: 2.00 percent
Dilution Tunnel Static: -0.109 "H2O
Tunnel Area: 0.19635 ft2
Pitot Tube Cp: 0.99

Avg. Tunnel Velocity: 18.52 ft/sec.
Initial Tunnel Flow: 199.6 scfm
Average Tunnel Flow: 188.6 scfm
Post-Test Leak Check (1): 0.000 cfm @ 10 in. Hg
Post-Test Leak Check (2): 0.000 cfm @ 10 in. Hg
Average Test Piece Fuel Moisture: 19.22 Dry Basis %

Technician Signature:

Velocity Traverse Data	Pt.1	Pt.2	Pt.3	Pt.4	Pt.5	Pt.6	Pt.7	Pt.8	Center	
Initial dP	0.070	0.078	0.074	0.074	0.068	0.078	0.072	0.064	0.072	"H2O
Temp:	73	73	73	73	73	73	73	73	72	°F

V_{strav} 18.33 ft/sec V_{scent} 18.29 ft/sec F_p 1.002

	Particulate Sampling Data														Fuel Weight (lb)		Temperature Data (°F)													Stack Gas Data		
Elapsed Time (min)	Gas Meter 1 (ft^3)	Gas Meter 2 (ft^3)	Sample Rate 1 (cfm)	Sample Rate 2 (cfm)	Orifice dH 1 ("H_2O)	Meter 1 Temp (°F)	Meter 1 Vacuum ("Hg)	Orifice dH 2 ("H_2O)	Meter 2 Temp (°F)	Meter 2 Vacuum ("Hg)	Dilution Tunnel (°F)	Dilution Tunnel Center dP	Pro. Rate 1	Pro. Rate 2	Scale Reading	Weight Change	Firebox Top	Firebox Bottom	Firebox Back	Firebox Left	Firebox Right	Avg. Stove Surface	Catalyst Exit	Stack	Filter 1	Dryer Exit 1	Filter 2	Dryer Exit 2	Ambient	Draft ("H_2O)	CO_2 (%)	CO (%)
105	15.423	16.741	0.15	0.16	1.85	67	-1.51	1.47	67	-5.8	115	0.070	101	99	10.4	-0.2	476	320	282	358	367	361	991	448	88	56	86	57	69	-0.075	11.94	0
106	15.572	16.898	0.15	0.16	1.85	68	-1.5	1.45	67	-5.7	115	0.070	100	97	10.3	-0.1	476	321	282	358	368	361	990	447	87	56	86	57	69	-0.075	12.2	0
107	15.721	17.059	0.15	0.16	1.84	68	-1.3	1.49	67	-5.9	115	0.070	100	99	10.2	-0.1	475	322	282	359	369	361	988	445	87	56	87	57	70	-0.075	12.45	-0.01
108	15.870	17.219	0.15	0.16	1.83	68	-1.52	1.47	67	-6	114	0.070	100	99	10.0	-0.2	476	323	283	359	369	362	990	447	88	56	87	58	70	-0.075	12.79	-0.01
109	16.019	17.377	0.15	0.16	1.83	68	-1.03	1.46	67	-6	115	0.070	100	97	9.8	-0.2	477	325	283	360	371	363	995	446	88	56	87	58	69	-0.075	13.11	-0.02
110	16.169	17.536	0.15	0.16	1.82	68	-1.04	1.54	67	-6.5	115	0.070	101	98	9.7	-0.1	480	326	284	361	372	365	1011	448	88	56	87	58	70	-0.075	13.58	-0.03
111	16.318	17.698	0.15	0.16	1.85	68	-1.04	1.51	67	-6.6	116	0.070	100	100	9.6	-0.1	485	328	285	362	373	367	1021	451	88	56	87	58	69	-0.076	13.98	-0.03
112	16.467	17.858	0.15	0.16	1.85	68	-1.19	1.48	67	-6.5	115	0.070	100	99	9.4	-0.2	490	331	286	363	374	369	1029	453	88	57	87	58	69	-0.075	14.33	-0.02
113	16.616	18.017	0.15	0.16	1.83	68	-1.27	1.44	67	-6.6	116	0.070	100	98	9.3	-0.1	496	333	287	364	375	371	1025	455	88	57	87	58	69	-0.075	14.47	0.03
114	16.765	18.176	0.15	0.16	1.85	68	-1.2	1.47	67	-7	116	0.070	100	98	9.1	-0.1	501	336	288	366	377	374	1022	454	89	57	87	58	70	-0.077	14.15	0.03
115	16.913	18.329	0.15	0.15	1.85	68	-1.08	1.38	67	-1.7	116	0.070	100	94	9.0	-0.2	505	339	289	367	378	376	1007	453	88	57	87	58	70	-0.075	13.94	-0.02
116	17.063	18.490	0.15	0.16	1.84	68	-1.05	1.52	67	-2.2	115	0.070	101	99	8.9	-0.1	507	341	290	369	380	377	994	450	88	57	88	58	70	-0.075	13.5	-0.03
117	17.212	18.653	0.15	0.16	1.84	68	-1.11	1.53	68	-1.9	114	0.070	100	100	8.8	-0.1	509	344	291	371	381	379	988	446	88	57	88	58	70	-0.075	13.22	-0.03
118	17.361	18.815	0.15	0.16	1.84	68	-1.52	1.53	68	-2.1	115	0.070	100	100	8.6	-0.2	510	346	292	373	382	381	993	448	88	57	88	58	70	-0.075	13.24	-0.01
119	17.510	18.978	0.15	0.16	1.84	68	-1.49	1.54	68	-2.1	115	0.070	100	100	8.5	-0.1	511	348	293	375	384	382	990	449	88	57	88	58	70	-0.074	13.03	-0.03
120	17.659	19.141	0.15	0.16	1.82	69	-1.5	1.53	68	-1.9	115	0.070	100	100	8.4	-0.1	510	350	294	377	385	383	975	446	88	57	88	58	70	-0.073	12.53	-0.03
121	17.808	19.303	0.15	0.16	1.83	69	-1.38	1.52	68	-1.9	114	0.070	100	100	8.3	-0.1	508	352	296	379	387	384	965	442	89	57	87	58	70	-0.073	12.24	-0.03
122	17.957	19.466	0.15	0.16	1.84	69	-1.52	1.53	68	-2.1	114	0.070	100	100	8.2	-0.1	506	354	297	381	389	385	957	440	89	57	87	58	70	-0.073	12.02	-0.03
123	18.107	19.629	0.15	0.16	1.85	69	-1.43	1.53	68	-1.9	113	0.070	101	100	8.0	-0.1	504	356	297	382	391	386	952	438	89	57	87	58	71	-0.072	11.88	-0.03
124	18.255	19.792	0.15	0.16	1.85	69	-1.38	1.54	68	-2	113	0.070	99	100	7.9	-0.1	501	358	298	384	392	387	951	435	89	57	87	58	70	-0.072	11.79	-0.03
125	18.404	19.955	0.15	0.16	1.85	69	-1.04	1.53	68	-1.9	113	0.070	100	100	7.8	-0.1	499	360	299	386	394	388	969	437	89	58	87	58	70	-0.073	11.69	-0.02
126	18.553	20.117	0.15	0.16	1.84	69	-1.52	1.52	68	-2.1	114	0.070	100	100	7.7	-0.1	498	362	300	387	395	388	969	437	88	58	87	58	70	-0.073	11.53	-0.03
127	18.702	20.280	0.15	0.16	1.85	69	-1.24	1.53	68	-2.1	114	0.070	100	100	7.6	-0.1	496	363	301	389	397	389	964	435	88	58	87	58	71	-0.072	11.44	-0.03
128	18.851	20.443	0.15	0.16	1.84	69	-1.34	1.53	68	-1.9	112	0.070	100	100	7.5	-0.1	493	365	302	390	398	390	958	433	88	58	87	58	71	-0.073	11.51	-0.03
129	19.000	20.606	0.15	0.16	1.84	69	-1.42	1.53	68	-1.9	114	0.070	100	100	7.4	-0.1	491	366	303	392	399	390	957	432	88	58	87	58	71	-0.072	11.39	-0.03
130	19.150	20.769	0.15	0.16	1.83	69	-1.41	1.52	68	-1.9	113	0.070	101	100	7.3	-0.1	490	367	304	393	399	391	961	432	88	58	87	58	70	-0.072	11.21	-0.03
131	19.299	20.932	0.15	0.16	1.83	69	-1.38	1.53	68	-1.9	113	0.070	100	100	7.2	-0.1	487	367	304	394	400	390	951	430	88	58	87	58	71	-0.072	10.8	-0.03
132	19.448	21.095	0.15	0.16	1.83	69	-1.21	1.53	68	-2.2	113	0.070	100	100	7.1	-0.1	485	367	305	395	400	390	947	431	88	58	87	58	70	-0.071	10.64	-0.02
133	19.598	21.259	0.15	0.16	1.84	69	-1.47	1.53	69	-1.9	113	0.070	101	101	7.0	-0.1	483	367	305	396	401	390	954	428	88	58	87	58	70	-0.072	10.66	-0.02
134	19.747	21.421	0.15	0.16	1.83	69	-1.03	1.53	69	-2	112	0.070	100	99	6.9	-0.1	482	367	306	397	401	391	970	433	88	58	87	58	70	-0.072	10.45	-0.01
135	19.895	21.584	0.15	0.16	1.85	70	-1.41	1.53	69	-2.1	113	0.070	99	100	6.8	-0.1	480	367	306	398	402	391	959	431	88	58	87	58	70	-0.072	10.24	-0.01
136	20.044	21.748	0.15	0.16	1.84	70	-1.26	1.53	69	-2.1	113	0.070	100	101	6.8	-0.1	478	367	307	398	402	390	949	431	88	58	87	58	70	-0.071	10.19	-0.01
137	20.192	21.911	0.15	0.16	1.83	70	-1.51	1.52	69	-2.1	113	0.070	99	100	6.7	-0.1	475	367	307	399	402	390	948	431	88	58	87	58	71	-0.072	10.07	-0.01
138	20.341	22.073	0.15	0.16	1.84	70	-1.47	1.53	69	-1.9	113	0.070	100	99	6.6	-0.1	472	366	308	400	402	390	942	430	88	58	87	58	70	-0.071	10.02	-0.01
139	20.490	22.237	0.15	0.16	1.83	70	-1.32	1.53	69	-1.9	113	0.070	100	101	6.5	-0.1	470	366	308	400	402	389	943	430	88	58	87	58	72	-0.072	9.95	-0.01

Wood Heater Test Data
Hign Burn Emissions Data

Run: 1

Manufacturer: Kuma Stoves
Model: Aspen LE
Tracking No.: 2357
Project No.: 0123WM011E
Test Date: 26-Feb-19
Beginning Clock Time: 11:11

Total Sampling Time: 208 min
Recording Interval: 1 min
Background Sample Volume: 30.432 cubic feet

Meter Box Y Factor: 1.009 (1) 0.996 (2) 0.998 (Amb)

Barometric Pressure:	Begin	Middle	End	Average	
	28.50	28.49	28.47	28.49	0

OMNI Equipment Numbers:

PM Control Modules: 371, 372
Dilution Tunnel MW(dry): 29.00 lb/lb-mole
Dilution Tunnel MW(wet): 28.78 lb/lb-mole
Dilution Tunnel H2O: 2.00 percent
Dilution Tunnel Static: -0.109 "H2O
Tunnel Area: 0.19635 ft2
Pitot Tube Cp: 0.99

Avg. Tunnel Velocity: 18.52 ft/sec.
Initial Tunnel Flow: 199.6 scfm
Average Tunnel Flow: 188.6 scfm
Post-Test Leak Check (1): 0.000 cfm @ 10 in. Hg
Post-Test Leak Check (2): 0.000 cfm @ 10 in. Hg
Average Test Piece Fuel Moisture: 19.22 Dry Basis %

Technician Signature:

Velocity Traverse Data	Pt.1	Pt.2	Pt.3	Pt.4	Pt.5	Pt.6	Pt.7	Pt.8	Center	
Initial dP	0.070	0.078	0.074	0.074	0.068	0.078	0.072	0.064	0.072	"H2O
Temp:	73	73	73	73	73	73	73	73	72	°F

V_{strav} 18.33 ft/sec V_{scent} 18.29 ft/sec F_p 1.002

	Particulate Sampling Data														Fuel Weight (lb)		Temperature Data (°F)												Stack Gas Data		
Elapsed Time (min)	Gas Meter 1 (ft^3)	Gas Meter 2 (ft^3)	Sample Rate 1 (cfm)	Sample Rate 2 (cfm)	Orifice dH 1 ("H_2O)	Meter 1 Temp (°F)	Meter 1 Vacuum ("Hg)	Orifice dH 2 ("H_2O)	Meter 2 Temp (°F)	Meter 2 Vacuum ("Hg)	Dilution Tunnel (°F)	Dilution Tunnel Center dP	Pro. Rate 1	Pro. Rate 2	Scale Reading	Weight Change	Firebox Top	Firebox Bottom	Firebox Back	Firebox Left	Firebox Right	Avg. Stove Surface	Catalyst Exit	Stack	Filter 1	Dryer Exit 1	Filter 2	Dryer Exit 2	Ambient	Draft ("H_2O)	CO_2 (%)	CO (%)
140	20.638	22.399	0.15	0.16	1.83	70	-1.22	1.53	69	-2.1	113	0.070	99	99	6.4	-0.1	467	365	309	401	402	389	939	429	88	58	87	58	72	-0.071	9.91	-0.01
141	20.787	22.563	0.15	0.16	1.81	70	-1.27	1.54	69	-2.1	113	0.070	100	101	6.3	-0.1	464	365	310	401	402	388	934	429	88	58	87	58	73	-0.071	9.88	-0.01
142	20.935	22.726	0.15	0.16	1.82	70	-1.35	1.53	69	-1.9	112	0.070	99	100	6.2	-0.1	461	365	311	401	402	388	929	429	88	58	87	58	71	-0.071	9.86	-0.01
143	21.084	22.889	0.15	0.16	1.82	70	-1.05	1.53	69	-2.1	113	0.070	100	100	6.2	-0.1	458	365	311	401	402	387	923	427	88	58	87	58	71	-0.071	9.9	-0.01
144	21.233	23.052	0.15	0.16	1.81	70	-1.12	1.52	69	-2.1	112	0.070	100	100	6.1	-0.1	455	365	312	401	402	387	927	427	88	58	87	58	72	-0.071	9.77	-0.01
145	21.382	23.215	0.15	0.16	1.82	70	-1.43	1.53	69	-2.1	113	0.070	100	100	6.0	-0.1	453	365	313	402	402	387	928	428	88	58	87	58	70	-0.071	9.74	-0.01
146	21.530	23.378	0.15	0.16	1.82	70	-1.09	1.53	69	-2	112	0.070	99	100	5.9	-0.1	451	365	315	402	401	387	933	427	88	58	87	58	72	-0.071	9.72	-0.01
147	21.679	23.542	0.15	0.16	1.83	70	-1.06	1.52	69	-2	112	0.070	100	101	5.9	-0.1	450	366	315	402	401	387	930	425	88	58	87	58	71	-0.071	9.59	-0.01
148	21.827	23.704	0.15	0.16	1.80	70	-1.13	1.52	69	-1.9	113	0.070	99	99	5.7	-0.1	448	366	317	402	401	387	920	423	88	58	88	58	70	-0.070	9.47	-0.01
149	21.975	23.867	0.15	0.16	1.83	70	-1.06	1.52	69	-2	112	0.070	99	100	5.7	-0.1	445	366	318	402	401	386	911	422	88	58	88	58	70	-0.070	9.39	-0.01
150	22.123	24.031	0.15	0.16	1.83	70	-1.5	1.53	70	-2.1	112	0.070	99	100	5.6	-0.1	442	367	320	402	401	386	904	420	88	58	88	58	71	-0.070	9.35	-0.01
151	22.271	24.194	0.15	0.16	1.82	71	-1.05	1.53	70	-2	113	0.070	99	100	5.6	-0.1	439	367	321	402	400	386	894	418	88	58	88	58	71	-0.070	9.34	-0.02
152	22.420	24.357	0.15	0.16	1.81	71	-1.5	1.54	70	-1.9	112	0.070	99	100	5.5	-0.1	436	367	323	402	400	386	893	416	88	58	88	58	71	-0.070	9.47	-0.02
153	22.568	24.520	0.15	0.16	1.82	71	-1.14	1.52	70	-2	113	0.070	99	100	5.4	-0.1	434	368	325	402	399	386	887	413	89	58	88	58	71	-0.071	9.49	-0.02
154	22.717	24.683	0.15	0.16	1.82	71	-1.54	1.52	70	-2.1	112	0.070	99	100	5.3	-0.1	431	369	327	402	400	386	887	412	89	58	88	58	72	-0.070	9.49	-0.02
155	22.865	24.846	0.15	0.16	1.82	71	-1.24	1.53	70	-2.1	112	0.070	99	100	5.2	-0.1	428	369	328	402	399	385	890	411	89	58	88	58	71	-0.070	9.58	-0.03
156	23.013	25.010	0.15	0.16	1.81	71	-1.15	1.52	70	-2	112	0.070	99	100	5.1	-0.1	427	370	330	402	399	386	889	411	89	58	88	58	71	-0.069	9.58	-0.03
157	23.161	25.173	0.15	0.16	1.81	71	-1.1	1.53	70	-2.1	112	0.070	99	100	5.1	-0.1	425	371	332	402	399	386	893	410	89	58	88	58	71	-0.069	9.63	-0.03
158	23.310	25.336	0.15	0.16	1.81	71	-1.16	1.53	70	-2.2	112	0.070	99	100	5.0	-0.1	424	372	334	402	398	386	895	410	89	58	88	58	71	-0.069	9.56	-0.03
159	23.458	25.499	0.15	0.16	1.80	71	-1.36	1.53	70	-2.2	112	0.070	99	100	4.9	0.0	423	373	336	402	399	387	897	410	89	58	88	58	70	-0.069	9.56	-0.02
160	23.607	25.662	0.15	0.16	1.80	71	-1.51	1.52	70	-2	112	0.070	99	100	4.9	-0.1	423	375	338	402	398	387	906	412	89	59	88	58	70	-0.069	9.37	-0.02
161	23.755	25.826	0.15	0.16	1.79	71	-1.18	1.53	70	-2.1	112	0.070	99	100	4.8	-0.1	424	376	340	402	399	388	914	415	88	59	88	58	69	-0.069	9.23	-0.02
162	23.903	25.989	0.15	0.16	1.82	71	-1.55	1.53	70	-2	112	0.070	99	100	4.7	-0.1	424	377	342	403	398	389	915	415	88	58	88	58	70	-0.069	9.15	-0.01
163	24.051	26.152	0.15	0.16	1.82	71	-1.28	1.53	70	-1.9	112	0.070	99	100	4.6	-0.1	425	378	343	403	398	389	923	417	88	59	88	58	69	-0.065	9.16	-0.02
164	24.200	26.316	0.15	0.16	1.82	71	-1.14	1.52	70	-2.2	112	0.070	99	100	4.6	-0.1	425	378	344	403	398	390	916	414	88	59	88	58	71	-0.064	9.07	-0.02
165	24.348	26.479	0.15	0.16	1.80	71	-1.48	1.52	70	-2	112	0.070	99	100	4.5	-0.1	424	378	346	403	398	390	904	413	88	59	88	58	71	-0.064	9.16	-0.02
166	24.496	26.642	0.15	0.16	1.83	71	-1.49	1.52	70	-2.2	112	0.070	99	100	4.4	0.0	424	378	346	403	397	390	902	413	88	59	88	58	70	-0.064	9.23	-0.02
167	24.644	26.806	0.15	0.16	1.83	71	-1.09	1.53	70	-2.2	111	0.070	99	100	4.4	-0.1	423	378	347	403	397	390	896	412	88	59	88	58	70	-0.063	9.22	-0.03
168	24.792	26.969	0.15	0.16	1.82	71	-1.45	1.53	71	-2.1	112	0.070	99	100	4.3	-0.1	422	377	347	403	397	389	893	411	88	59	88	58	70	-0.064	9.18	-0.03
169	24.940	27.132	0.15	0.16	1.81	72	-1.09	1.52	71	-1.9	112	0.070	99	100	4.2	-0.1	422	376	347	403	396	389	890	409	88	59	88	58	70	-0.063	9.16	-0.03
170	25.089	27.296	0.15	0.16	1.82	72	-1.19	1.51	71	-2.1	111	0.070	99	100	4.1	-0.1	421	375	347	403	396	388	887	409	88	59	88	58	70	-0.063	9.22	-0.03
171	25.237	27.459	0.15	0.16	1.82	72	-1.38	1.53	71	-2	112	0.070	99	100	4.1	-0.1	421	374	347	404	396	388	889	408	88	59	88	58	70	-0.064	9.28	-0.03
172	25.385	27.623	0.15	0.16	1.81	72	-1.09	1.52	71	-2.2	111	0.070	98	100	4.0	-0.1	421	373	346	404	396	388	888	408	88	59	88	58	70	-0.063	9.32	-0.03
173	25.533	27.786	0.15	0.16	1.81	72	-1.46	1.53	71	-2.2	111	0.070	98	99	3.9	-0.1	421	372	345	404	396	388	886	407	88	59	88	58	70	-0.064	9.33	-0.03
174	25.681	27.950	0.15	0.16	1.80	72	-1.25	1.53	71	-2	112	0.070	99	100	3.8	-0.1	421	371	344	404	396	387	889	407	88	59	88	58	70	-0.063	9.43	-0.03

Wood Heater Test Data
Hign Burn Emissions Data

Run: 1

Manufacturer: Kuma Stoves
Model: Aspen LE
Tracking No.: 2357
Project No.: 0123WM011E
Test Date: 26-Feb-19
Beginning Clock Time: 11:11

Total Sampling Time: 208 min
Recording Interval: 1 min
Background Sample Volume: 30.432 cubic feet

Meter Box Y Factor: 1.009 (1) 0.996 (2) 0.998 (Amb)

Barometric Pressure:	Begin	Middle	End	Average	
	28.50	28.49	28.47	28.49	0

OMNI Equipment Numbers:

PM Control Modules: 371, 372
Dilution Tunnel MW(dry): 29.00 lb/lb-mole
Dilution Tunnel MW(wet): 28.78 lb/lb-mole
Dilution Tunnel H2O: 2.00 percent
Dilution Tunnel Static: -0.109 "H2O
Tunnel Area: 0.19635 ft2
Pitot Tube Cp: 0.99

Avg. Tunnel Velocity: 18.52 ft/sec.
Initial Tunnel Flow: 199.6 scfm
Average Tunnel Flow: 188.6 scfm
Post-Test Leak Check (1): 0.000 cfm @ 10 in. Hg
Post-Test Leak Check (2): 0.000 cfm @ 10 in. Hg
Average Test Piece Fuel Moisture: 19.22 Dry Basis %

Technician Signature:

Velocity Traverse Data	Pt.1	Pt.2	Pt.3	Pt.4	Pt.5	Pt.6	Pt.7	Pt.8	Center	
Initial dP	0.070	0.078	0.074	0.074	0.068	0.078	0.072	0.064	0.072	"H2O
Temp:	73	73	73	73	73	73	73	73	72	°F

V_{strav} 18.33 ft/sec V_{scent} 18.29 ft/sec F_p 1.002

	Particulate Sampling Data														Fuel Weight (lb)		Temperature Data (°F)													Stack Gas Data		
Elapsed Time (min)	Gas Meter 1 (ft^3)	Gas Meter 2 (ft^3)	Sample Rate 1 (cfm)	Sample Rate 2 (cfm)	Orifice dH 1 ("H_2O)	Meter 1 Temp (°F)	Meter 1 Vacuum ("Hg)	Orifice dH 2 ("H_2O)	Meter 2 Temp (°F)	Meter 2 Vacuum ("Hg)	Dilution Tunnel (°F)	Dilution Tunnel Center dP	Pro. Rate 1	Pro. Rate 2	Scale Reading	Weight Change	Firebox Top	Firebox Bottom	Firebox Back	Firebox Left	Firebox Right	Avg. Stove Surface	Catalyst Exit	Stack	Filter 1	Dryer Exit 1	Filter 2	Dryer Exit 2	Ambient	Draft ("H_2O)	CO_2 (%)	CO (%)
175	25.829	28.113	0.15	0.16	1.81	72	-1.56	1.53	71	-1.9	112	0.070	99	100	3.8	-0.1	422	370	343	405	396	387	891	407	88	59	88	58	70	-0.064	9.51	-0.03
176	25.978	28.277	0.15	0.16	1.80	72	-1.14	1.52	71	-2	112	0.070	99	100	3.7	-0.1	422	369	342	405	396	387	890	407	88	59	88	58	70	-0.064	9.61	-0.03
177	26.127	28.441	0.15	0.16	1.80	72	-1.43	1.53	71	-2.1	110	0.070	99	100	3.7	-0.1	423	368	341	406	396	387	892	407	88	59	88	58	69	-0.063	9.59	-0.03
178	26.275	28.604	0.15	0.16	1.79	72	-1.08	1.52	71	-2.2	111	0.070	98	99	3.6	-0.1	423	367	341	407	397	387	895	406	88	59	88	58	69	-0.064	9.59	-0.03
179	26.423	28.767	0.15	0.16	1.81	72	-1.56	1.53	71	-1.9	112	0.070	99	100	3.5	-0.1	424	366	340	408	397	387	893	407	88	59	88	58	70	-0.065	9.81	-0.03
180	26.571	28.931	0.15	0.16	1.82	72	-1.25	1.53	71	-1.9	112	0.070	99	100	3.4	-0.1	424	365	339	408	397	387	894	407	88	59	88	58	70	-0.065	9.88	-0.04
181	26.719	29.094	0.15	0.16	1.81	72	-1.56	1.53	71	-2.2	112	0.070	99	100	3.3	-0.1	425	364	338	409	398	387	894	407	88	59	88	58	70	-0.064	10.25	-0.04
182	26.868	29.258	0.15	0.16	1.80	72	-1.12	1.53	71	-2	112	0.070	99	100	3.3	-0.1	426	363	337	410	398	387	899	407	89	59	89	58	70	-0.064	10.52	-0.04
183	27.016	29.422	0.15	0.16	1.82	72	-1.28	1.53	71	-2.1	111	0.070	98	100	3.1	-0.1	427	363	336	412	399	387	909	407	88	59	88	58	71	-0.064	10.66	-0.04
184	27.163	29.585	0.15	0.16	1.81	72	-1.32	1.52	72	-2	111	0.070	98	99	3.1	0.0	430	363	335	414	399	388	914	409	88	59	88	58	71	-0.065	10.88	-0.04
185	27.311	29.748	0.15	0.16	1.82	72	-1.09	1.53	72	-2.2	112	0.070	99	99	3.0	-0.1	433	362	335	415	400	389	923	412	88	59	87	58	70	-0.065	10.83	-0.04
186	27.459	29.912	0.15	0.16	1.81	72	-1.14	1.53	72	-2.2	111	0.070	98	100	2.9	-0.1	435	362	334	417	401	390	926	412	87	59	87	58	71	-0.065	10.71	-0.04
187	27.608	30.075	0.15	0.16	1.81	73	-1.44	1.53	72	-2.2	112	0.070	99	99	2.8	-0.1	438	361	334	419	402	391	928	413	87	59	87	58	71	-0.066	10.66	-0.04
188	27.756	30.239	0.15	0.16	1.81	73	-1.48	1.53	72	-2.1	113	0.070	98	100	2.8	-0.1	440	361	333	421	403	392	925	414	87	59	86	58	71	-0.066	10.52	-0.04
189	27.904	30.403	0.15	0.16	1.81	73	-1.3	1.53	72	-2.1	112	0.070	98	100	2.7	-0.1	442	360	332	423	404	392	921	413	87	59	86	58	71	-0.065	10.41	-0.04
190	28.051	30.566	0.15	0.16	1.80	73	-1.56	1.52	72	-2.1	113	0.070	98	99	2.6	-0.1	443	360	332	425	405	393	918	412	87	59	86	58	71	-0.065	10.4	-0.04
191	28.199	30.730	0.15	0.16	1.81	73	-1.28	1.53	72	-2	112	0.070	98	100	2.5	-0.1	444	360	331	427	407	394	921	413	87	59	86	58	71	-0.065	10.47	-0.04
192	28.347	30.894	0.15	0.16	1.79	73	-1.1	1.53	72	-2.2	112	0.070	98	100	2.5	-0.1	445	359	331	429	409	395	921	412	87	59	86	58	71	-0.064	10.52	-0.04
193	28.495	31.057	0.15	0.16	1.79	73	-1.58	1.53	72	-2	112	0.070	98	99	2.4	-0.1	446	359	330	431	411	395	914	413	87	59	86	58	71	-0.065	11.2	-0.05
194	28.642	31.220	0.15	0.16	1.78	73	-1.17	1.53	72	-2	113	0.070	98	99	2.3	-0.1	447	359	330	432	412	396	914	411	88	59	86	58	71	-0.064	11.28	-0.04
195	28.789	31.384	0.15	0.16	1.78	73	-1.22	1.53	72	-2	112	0.070	98	100	2.3	-0.1	448	359	330	434	414	397	916	412	88	59	86	58	72	-0.063	11.22	-0.04
196	28.936	31.547	0.15	0.16	1.77	73	-1.37	1.51	72	-2.2	113	0.070	98	99	2.2	-0.1	449	359	330	436	416	398	907	411	87	59	87	58	71	-0.063	11.08	-0.03
197	29.083	31.710	0.15	0.16	1.76	73	-1.21	1.52	72	-1.9	112	0.070	98	99	2.1	-0.1	450	359	330	437	418	399	912	411	87	59	87	58	71	-0.063	10.99	-0.04
198	29.229	31.873	0.15	0.16	1.76	73	-1.58	1.52	72	-2	111	0.070	97	99	2.0	-0.1	451	359	331	439	420	400	917	411	87	59	87	58	71	-0.062	11.04	-0.04
199	29.376	32.036	0.15	0.16	1.76	73	-1.16	1.52	72	-2.1	112	0.070	98	99	1.9	-0.1	452	360	331	440	422	401	911	413	87	59	87	58	71	-0.062	10.9	-0.05
200	29.523	32.199	0.15	0.16	1.76	73	-1.49	1.52	72	-2.2	111	0.070	98	99	1.9	0.0	452	360	332	442	425	402	907	410	87	59	87	58	72	-0.063	10.69	-0.05
201	29.671	32.363	0.15	0.16	1.84	73	-1.7	1.52	72	-2	111	0.070	98	100	1.8	-0.1	452	360	332	443	427	403	909	409	88	59	87	58	71	-0.064	10.75	-0.05
202	29.821	32.525	0.15	0.16	1.83	73	-1.32	1.51	73	-2.1	112	0.070	100	99	1.8	-0.1	451	361	332	445	429	404	905	407	88	59	87	58	71	-0.062	10.71	-0.05
203	29.970	32.688	0.15	0.16	1.84	73	-1.22	1.52	73	-2.2	112	0.070	99	99	1.7	-0.1	450	362	333	447	431	405	901	405	88	59	87	58	72	-0.062	10.36	-0.05
204	30.120	32.852	0.15	0.16	1.84	73	-1.25	1.52	73	-2.2	111	0.070	100	100	1.6	-0.1	449	362	334	449	433	405	896	404	88	59	87	58	71	-0.062	9.97	-0.05
205	30.270	33.014	0.15	0.16	1.84	74	-1.49	1.52	73	-2.1	112	0.070	99	99	1.6	0.0	447	363	335	451	434	406	885	403	88	59	87	58	71	-0.062	9.64	-0.04
206	30.419	33.177	0.15	0.16	1.85	74	-1.43	1.52	73	-2.2	111	0.070	99	99	1.6	-0.1	444	363	336	453	436	406	875	401	88	59	87	58	72	-0.062	9.49	-0.04
207	30.569	33.340	0.15	0.16	1.84	74	-1.26	1.51	73	-2.2	111	0.070	99	99	1.5	-0.1	440	364	337	455	438	407	861	399	88	59	87	58	72	-0.062	9.23	-0.04
208	30.718	33.503	0.15	0.16	1.84	74	-1.71	1.51	73	-2.1	111	0.070	99	99	1.5	0.0	437	364	337	457	440	407	854	397	88	59	87	58	72	-0.061	8.98	-0.04
Avg/Tot	30.718	33.503	0.15	0.16	1.82	67		1.50	67		110	0.069	100	100								350.6				55	87	56	68	-0.068		

Wood Heater Test Data
Hign Burn Emissions Data

Run: 1

Manufacturer: Kuma Stoves
Model: Aspen LE
Tracking No.: 2357
Project No.: 0123WM011E
Test Date: 26-Feb-19
Beginning Clock Time: 11:11

Total Sampling Time: 208 min
Recording Interval: 1 min
Background Sample Volume: 30.432 cubic feet

Meter Box Y Factor: 1.009 (1) 0.996 (2) 0.998 (Amb)

Barometric Pressure:	Begin	Middle	End	Average
	28.50	28.49	28.47	28.49 0

OMNI Equipment Numbers:

PM Control Modules: 371, 372
Dilution Tunnel MW(dry): 29.00 lb/lb-mole
Dilution Tunnel MW(wet): 28.78 lb/lb-mole
Dilution Tunnel H2O: 2.00 percent
Dilution Tunnel Static: -0.109 "H2O
Tunnel Area: 0.19635 ft2
Pitot Tube Cp: 0.99

Avg. Tunnel Velocity: 18.52 ft/sec.
Initial Tunnel Flow: 199.6 scfm
Average Tunnel Flow: 188.6 scfm
Post-Test Leak Check (1): 0.000 cfm @ 10 in. Hg
Post-Test Leak Check (2): 0.000 cfm @ 10 in. Hg
Average Test Piece Fuel Moisture: 19.22 Dry Basis %

Technician Signature:

Velocity Traverse Data	Pt.1	Pt.2	Pt.3	Pt.4	Pt.5	Pt.6	Pt.7	Pt.8	Center	
Initial dP	0.070	0.078	0.074	0.074	0.068	0.078	0.072	0.064	0.072	"H2O
Temp:	73	73	73	73	73	73	73	73	72	°F

V_{strav} 18.33 ft/sec V_{scent} 18.29 ft/sec F_p 1.002

	Particulate Sampling Data													Fuel Weight (lb)		Temperature Data (°F)													Stack Gas Data		
Elapsed Time (min)	Gas Meter 1 (ft^3)	Gas Meter 2 (ft^3)	Sample Rate 1 (cfm)	Sample Rate 2 (cfm)	Orifice dH 1 ("H_2O)	Meter 1 Temp (°F)	Meter 1 Vacuum ("Hg)	Orifice dH 2 ("H_2O)	Meter 2 Temp (°F)	Meter 2 Vacuum ("Hg)	Dilution Tunnel (°F)	Dilution Tunnel Center dP	Pro. Rate 1	Pro. Rate 2	Scale Reading	Weight Change	Firebox Top	Firebox Bottom	Firebox Back	Firebox Left	Firebox Right	Avg. Stove Surface	Catalyst Exit	Stack	Filter 1	Dryer Exit 1	Filter 2	Dryer Exit 2	Ambient	Draft ("H_2O)	CO_2 (%)	CO (%)

Wood Heater Lab Data

Manufacturer:	Kuma Stoves	Equipment Numbers:	
Model:	Aspen LE		
Tracking No.:	2357		
Project No.:	0123WM011E		
Run #:	1		
Date:	2/26/19		

TRAIN 1 (First Hour emissions)

Sample Component	Reagent	Filter, Probe or Dish #	Weights		
			Final, mg	Tare, mg	Particulate, mg
B. Front filter catch	Filter	T124S	91.1	88.7	2.4
C. Rear filter catch	Filter				0.0
D. Probe catch*	Probe				0.0
E. Filter seals catch*	Seals				0.0

Sub-Total	Total Particulate, mg:	2.4

TRAIN 1 (Post First Hour Change-out)

Sample Component	Reagent	Filter, Probe or Dish #	Weights		
			Final, mg	Tare, mg	Particulate, mg
B. Front filter catch	Filter	T53AP	187.1	185.5	1.6
C. Rear filter catch	Filter				0.0
D. Probe catch*	Probe	21	114392.4	114391.3	1.1
E. Filter seals catch*	Seals	R727	3304.3	3304.1	0.2

Sub-Total	Total Particulate, mg:	2.9
Train 1 Aggregate	Total Particulate, mg:	**5.3**

TRAIN 2

Sample Component	Reagent	Filter, Probe or Dish #	Weights		
			Final, mg	Tare, mg	Particulate, mg
A. Front filter catch	Filter	T53BP	190.2	186.2	4.0
B. Rear filter catch	Filter	T131S	88.8	88.0	0.8
C. Probe catch*	Probe	22	114344.3	114343.1	1.2
D. Filter seals catch*	Seals	R728	3578.7	3578.8	0.0

	Total Particulate, mg:	**6.0**

AMBIENT

Sample Component	Reagent	Filter # or Probe #	Weights		
			Final, mg	Tare, mg	Particulate, mg
A. Front filter catch*	Filter	D663	120.7	120.6	0.1

	Total Particulate, mg:	**0.1**

*Particulate catch that results in a negative number, is assumed to be zero for probes and seals, negative numbers for filters are assumed to be part of the seal weight.

Component	Equations:
A. Front filter catch	Final (mg) - Tare (mg) = Particulate, mg
B. Rear filter catch	Final (mg) - Tare (mg) = Particulate, mg
C. Probe catch	Final (mg) - Tare (mg) = Particulate, mg

Technician Signature: 

Wood Heater Test Results

Manufacturer: Kuma Stoves
Model: Aspen LE
Project No.: 0123WM011E
Tracking No.: 2357
Run: 1
Test Date: 02/26/19

Average Tunnel Temperature	110	degrees Fahrenheit
Average Gas Velocity in Dilution Tunnel - vs	18.52	feet/second
Average Gas Flow Rate in Dilution Tunnel - Qsd	11318.7	dscf/hour
Average Delta p	0.069	inches H20
Total Time of Test	208	minutes

	AMBIENT	SAMPLE TRAIN 1	SAMPLE TRAIN 2	FIRST HOUR FILTER (TRAIN 1)
Total Sample Volume - Vm	30.432 cubic feet	30.718 cubic feet	33.503 cubic feet	8.774 cubic feet
Average Gas Meter Temperature	68 degrees Fahrenheit	67 degrees Fahrenheit	67 degrees Fahrenheit	62 degrees Fahrenheit
Total Sample Volume (Standard Conditions) - Vmstd	28.920 dscf	29.676 dscf	31.971 dscf	8.558 dscf
Total Particulates - m_n	0.1 mg	5.3 mg	6 mg	2.4 mg
Particulate Concentration (dry-standard) - C_r/C_s	0.000003 grams/dscf	0.00018 grams/dscf	0.00019 grams/dscf	0.00028 grams/dscf
Total Particulate Emissions - E_T	0.14 grams	6.87 grams	7.23 grams	3.17 grams
Particulate Emission Rate	0.04 grams/hour	1.98 grams/hour	2.09 grams/hour	3.17 grams/hour
Emissions Factor		0.88 g/kg	0.93 g/kg	1.34 g/kg
Difference from Average Total Particulate Emissions		0.18 grams	0.18 grams	
	Dual Train Comparison Results Are Acceptable			

FINAL AVERAGE RESULTS

Complete Test Run	
Total Particulate Emissions - E_T	7.05 grams
Particulate Emission Rate	**2.03 grams/hour**
Emissions Factor	0.90 grams/kg
First Hour Emissions	
Total Particulate Emissions - E_T	3.17 grams
Particulate Emission Rate	3.17 grams/hour
Emissions Factor	1.34 grams/kg
7.5% of Average Total Particulate Emissions	0.53 grams

QUALITY CHECKS

Filter Temps < 90 °F	NOT ACCEPTABLE
Filter Face Velocity (47 mm)	OK
Dryer Exit Temp < 80F	OK
Leakage Rate	OK
Ambient Temp (55-90°F)	OK
Negative Probe Weight Eval.	OK
Pro-Rate Variation	OK

Technician Signature: 

Adjunct to ASTM E XXXX Wood Heater Cordwood Test Method - May 10, 2017 Version

Cordwood Fuel Load Calculators - 10 lb/ft^3 Nominal Load Density

Core 45-65% of Total Load Weight, Remainder 35-55% of Total Load Weight

Values to be input manually

THIS DOCUMENT IS NOT AN ASTM STANDARD; IT IS UNDER CONSIDERATION WITHIN AN ASTM TECHNICAL COMMITTEE BUT HAS NOT RECEIVED ALL APPROVALS REQUIRED TO BECOME AN ASTM STANDARD. IT SHALL NOT BE REPRODUCED OR CIRCULATED OR QUOTED, IN WHOLE OR IN PART, OUTSIDE OF ASTM COMMITTEE ACTIVITIES EXCEPT WITH THE APPROVAL OF THE CHAIRMAN OF THE COMMITTEE HAVING JURISDICTION AND THE PRESIDENT OF THE SOCIETY. *COPYRIGHT ASTM, 100 BARR HARBOR DRIVE, WEST CONSHOHOCKEN, PA 19428. ALL RIGHTS RESERVED.*

For All Usable Firebox Volumes - High Fire Test Only

Nominal Required Load Density (wet basis)	10	lb/ft^3				
Usable Firebox Volume	1.74	ft^3				
Total Nom. Load Wt. Target	17.36	lb				
Total Load Wt. Allowable Range	16.49	to	18.20	lb		
Core Target Wt. Allowable Range	7.80	to	11.30	lb		
Remainder Load Wt. Allowable Range	6.10	to	9.50	lb		
						Mid-Point
Core Load Pc. Wt. Allowable Range	2.60	to	4.30	lb		3.45
Remainder Load Pc. Wt. Allowable Range	1.70	to	9.50	lb		5.60
	Pc. #					
Core Load Piece Wt. Actual	1	3.35	lb	In Range		
	2	3.07	lb	In Range		
	3	3.63	lb	In Range		
Core Load Total. Wt. Actual		10.05	lb	In Range		
	Pc. #					
Remainder Load Piece Wt.	1	1.86	lb	In Range		
(1 to 3 Pcs.)	2	4.58	lb	In Range		
	3		lb	NA		
Remainder Load Tot. Wt. Act		6.44	lb	In Range		
Total Load Wt. Actual		16.49	lb	In Range		
Core % of Total Wt.		61%		In Range	45-65%	
Remainder % of Total Wt.		39%		In Range	35-55%	
Actual Load % of Nominal Target		95%		In Range	95-105%	
Actual Fuel Load Density		9.5	lb/ft^3			
Kindling and Start-up Fuel						
Maximim Kindling Wt. (20% of Tot. Load Wt.)		3.30	lb			
Actual Kindling Wt.		3.27	lb	In Range	19.8%	
Maximum Start-up Fuel Wt. (30% of Tot. Load Wt.)		4.95	lb			
Actual Start-up Fuel Wt.		4.90	lb	In Range	29.7%	
Allowable Residual Start-up Fuel Wt. Range	1.6	to	3.3	lb		Mid-Point
Actual Residual Start-up Fuel Wt.		2	lb	In Range		2.5
Total Wt. All Fuel Added (wet basis)		24.66	lb			
High Fire Test Run End Point Range	Low		High			Mid-Point
Based on Fuel Load Wt. (w/tares)	1.5	to	1.8	lb		1.6
Actual Fuel Load Ending Wt.		1.5	lb	In Range		

Fuel Piece Moisture Reading (%-dry basis)

1	2	3	Ave.		Pc. Wt. Dry Basis			
18.7	19.6	20.6	19.6	In Range	2.80	lb	1.27	kg
17.5	18	22.8	19.4	In Range	2.57	lb	1.17	kg
19.3	18.2	21.4	19.6	In Range	3.03	lb	1.38	kg
20.2	20.9	26.6	22.6	In Range	1.52	lb	0.69	kg
20.4	18.4	36	24.9	In Range	3.67	lb	1.66	kg
			NA	NA	NA	lb	NA	kg

Total Load Ave. MC (%-dry basis)	21.4	In Range			
Total Load Ave. MC % (wet basis)	17.6				
Total Test Load Weight (dry basis) →			13.59	lb	6.16 kg
Kindling Moisture (%-dry basis)					
8.071 8.071 8.071	8.1	In Range	3.02	lb	1.37 kg
Start-up Fuel Moisture Readings (%-dry basis)					
20.266 20.266 20.266	20.3	In Range	4.07	lb	1.85 kg
Total Wt. All Fuel Added (dry basis) →			20.69	lb	9.38 kg
Total Wt. All Fuel Burned (dry basis) →			17.2	lb	7.8 kg

OMNI-Test Laboratories, Inc.

Wood Heater Run Sheets

Client: Kuma Stoves Project Number: 0123WM011E Run Number: 1
Model: K-180 Aspen LE Tracking Number: 2357 Date: 2/26/19
Test Crew: B Davis
OMNI Equipment ID numbers: 133, 243A, 371, 372, 410, 426, 559, 592, 656, 637

Wood Heater Run Notes

Air Control Settings

Primary: fully open

Secondary: fixed

Tertiary/Pilot: N/A

Fan: On High

Preburn Notes

Time	Notes
Ø	Zero weight before test - No fuel in Fire box 439.3
	Torched used for 25 seconds, door closed @ 45 seconds, 15 minutes bypass closed. FAN off for start up load
61	At 20 lbs loaded High fuel load.

Test Notes

Sketch test fuel configuration:

See photo

Start up procedures & Timeline:

Bypass: ~~Not used~~ open until 1:35 min
Fuel loaded by: by 1:35 min
Door closed at: 1:35 min
Primary air: Fully open

Notes: FAN on High at 5:00 min
High burn fuel load 2:27 min

Time	Notes
60	Changed front filter in train A
115	changed front filter in train B

Technician Signature: [signature] Date: 4/3/19

OMNI-Test Laboratories, Inc.

Wood Heater Run Sheets

Client: Kuma Stoves Project Number: 0123WM011E Run Number: 1
Model: K-180 Aspen LE Tracking Number: 2357 Date: 2/26/19
Test Crew: BJ Davis
OMNI Equipment ID numbers:

Wood Heater Supplemental Data

Start Time: 10:54
Stop Time: 1422

Booth #: N/A

Stack Gas Leak Check:
Initial: good Final: good

Sample Train Leak Check:
A: 0.0 @ 10 "Hg
B: 0.0 @ 10 "Hg

Calibrations: Span Gas CO_2: 12.40 CO: 2.48

	Pre Test		Post Test	
	Zero	Span	Zero	Span
Time	10:33	10:36	1450	1450
CO_2	0.00	12.43	0.24	12.40
CO	-0.01	2.48	-0.074	2.37

Air Velocity (ft/min): Initial: 450 Final: 450
Scale Audit (lbs): Initial: 10.0 Final: 10.0
Pitot Tube Leak Test: Initial: good Final: good
Stack Diameter (in): 6"
Induced Draft: 0.0
% Smoke Capture: 100 %
Flue Pipe Cleaned Prior to First Test in Series:
Date: 2/25/19 Initials: BR

	Initial	Middle	Ending
P_b (in/Hg)	28.50		28.47
RH (%)	22%		20%
Ambient (°F)	60		72

Tunnel Traverse

Microtector Reading	dP (in H_2O)	T(°F)
	.070	73
	.078	73
	.074	73
	.074	73
	.068	73
	.078	73
	.072	73
	.064	73
Center:		
	.072	73

Background Filter Volume: 30.432

Tunnel Static Pressure (in H_2O):	
Beginning of Test	End of Test
-.109	-.109

Technician Signature: BJ Davis Date: 4/3/19

Run 1

High Burn 1-minute data

Efficiency and Heat Output Results
Kindling and start-up fuel removed from calculations

Wood Heater Test Data
Hign Burn efficiency Data

Run: 1

Manufacturer: Kuma Stoves
Model: Aspen LE
Tracking No.: 2357
Project No.: 0123WM011E
Test Date: 26-Feb-19
Beginning Clock Time: 11:11

Total Sampling Time: 146 min
Recording Interval: 1 min
Background Sample Volume: _____ cubic feet

Meter Box Y Factor: 1.009 (1) 0.996 (2) 0.998 (Amb)

Barometric Pressure:	Begin	Middle	End	Average
	28.50		28.47	28.49

0

OMNI Equipment Numbers: _____

PM Control Modules: 371, 372
Dilution Tunnel MW(dry): 29.00 lb/lb-mole
Dilution Tunnel MW(wet): 28.78 lb/lb-mole
Dilution Tunnel H2O: 2.00 percent
Dilution Tunnel Static: -0.109 "H2O
Tunnel Area: 0.19635 ft2
Pitot Tube Cp: 0.99

Avg. Tunnel Velocity: #DIV/0! ft/sec.
Initial Tunnel Flow: 199.6 scfm
Average Tunnel Flow: #DIV/0! scfm
Post-Test Leak Check (1): 0.000 cfm @ 10 in. Hg
Post-Test Leak Check (2): 0.000 cfm @ 10 in. Hg
Average Test Piece Fuel Moisture: 21.24 Dry Basis %

Technician Signature: _____

Velocity Traverse Data	Pt.1	Pt.2	Pt.3	Pt.4	Pt.5	Pt.6	Pt.7	Pt.8	Center	
Initial dP	0.070	0.078	0.074	0.074	0.068	0.078	0.072	0.064	0.072	"H2O
Temp:	73	73	73	73	73	73	73	73	72	°F

V_{strav} 18.33 ft/sec V_{scent} 18.29 ft/sec F_p 1.002

	Particulate Sampling Data														Fuel Weight (lb)		Temperature Data (°F)													Stack Gas Data		
Elapsed Time (min)	Gas Meter 1 (ft^3)	Gas Meter 2 (ft^3)	Sample Rate 1 (cfm)	Sample Rate 2 (cfm)	Orifice dH 1 ("H_2O)	Meter 1 Temp (°F)	Meter 1 Vacuum ("Hg)	Orifice dH 2 ("H_2O)	Meter 2 Temp (°F)	Meter 2 Vacuum ("Hg)	Dilution Tunnel (°F)	Dilution Tunnel Center dP	Pro. Rate 1	Pro. Rate 2	Scale Reading	Weight Change	Firebox Top	Firebox Bottom	Firebox Back	Firebox Left	Firebox Right	Avg. Stove Surface	Catalyst Exit	Stack	Filter 1	Dryer Exit 1	Filter 2	Dryer Exit 2	Ambient	Draft ("H_2O)	CO_2 (%)	CO (%)
0															15.0		543	421	227	320	305	363	934	447	87	54	86	55	67	-0.069	10.45	0
1															15.0		541	425	245	324	305	368	654	516	88	54	87	55	66	-0.070	7.76	0.09
2															14.8		526	429	251	328	308	368	633	418	87	54	87	55	66	-0.067	4.35	0.29
3															14.6		523	432	257	331	310	371	841	430	85	54	86	55	66	-0.070	8.4	0.03
4															14.5		523	434	263	334	314	374	900	441	84	54	86	55	66	-0.072	9.66	0.04
5															14.3		525	435	270	337	316	377	935	448	84	54	86	55	66	-0.073	10.47	0.03
6															14.1		507	427	275	338	318	373	961	453	84	54	87	55	65	-0.074	11.48	0.03
7															14.0		501	414	280	340	320	371	974	453	84	54	88	55	67	-0.074	11.83	0.03
8															13.8		495	406	284	340	322	369	988	453	84	54	89	55	68	-0.073	11.83	0.04
9															13.7		491	396	287	341	324	368	995	452	84	54	90	55	67	-0.073	11.89	0.03
10															13.5		488	388	289	342	326	367	997	454	85	54	90	55	67	-0.074	12.36	0.02
11															13.4		488	379	291	342	328	366	1012	455	85	54	91	56	67	-0.075	13.27	0
12															13.2		489	372	292	343	329	365	1012	456	85	54	88	56	68	-0.073	13.3	0
13															13.0		490	365	293	344	331	365	1023	457	85	54	84	56	67	-0.074	13.4	0
14															12.9		492	359	293	345	335	365	1023	457	85	55	82	56	67	-0.076	13.32	0.01
15															12.7		493	354	293	346	336	364	1016	457	85	55	82	56	68	-0.076	13.07	0.02
16															12.6		494	349	293	347	338	364	1012	456	85	55	84	56	67	-0.078	12.9	0.02
17															12.5		494	345	292	348	340	364	1013	457	86	55	86	56	67	-0.077	12.64	0.03
18															12.3		495	341	291	349	341	363	1013	457	86	55	87	56	68	-0.077	12.38	0.04
19															12.2		496	338	290	349	343	363	1012	458	86	55	88	56	66	-0.078	12.3	0.03
20															12.0		496	335	289	350	345	363	1018	459	86	55	88	56	68	-0.077	12.18	0.05
21															11.9		496	332	289	351	347	363	1013	458	87	55	88	56	67	-0.076	12.13	0.04
22															11.7		495	330	288	351	348	362	1011	458	87	55	86	56	68	-0.077	11.98	0.04
23															11.6		495	328	287	352	350	362	1014	457	87	55	85	56	68	-0.076	11.91	0.04
24															11.5		494	326	286	352	351	362	1015	457	87	55	84	56	68	-0.076	11.86	0.04
25															11.3		493	325	285	353	352	362	1014	458	87	55	84	56	68	-0.076	11.77	0.05
26															11.2		491	323	285	353	354	361	1004	455	88	55	83	57	68	-0.076	11.78	0.03
27															11.1		489	322	284	354	355	361	996	453	88	55	83	57	68	-0.076	11.81	0.03
28															10.9		488	320	284	355	356	361	997	452	88	55	84	57	70	-0.076	11.81	0.03
29															10.8		486	320	283	355	357	360	993	451	88	55	85	57	68	-0.076	11.77	0.02
30															10.7		484	318	283	355	358	360	984	450	88	55	85	57	68	-0.075	11.72	0.02
31															10.5		483	318	282	356	358	359	991	449	88	55	85	57	69	-0.075	11.79	0.02
32															10.4		482	317	282	356	360	359	999	450	88	55	86	57	68	-0.075	11.82	0.02
33															10.3		483	316	282	357	360	360	1016	453	88	55	86	57	69	-0.075	11.74	0.03
34															10.1		485	316	281	357	361	360	1027	456	88	55	86	57	69	-0.076	11.6	0.04

Wood Heater Test Data
Hign Burn efficiency Data

Run: 1

Manufacturer: Kuma Stoves
Model: Aspen LE
Tracking No.: 2357
Project No.: 0123WM011E
Test Date: 26-Feb-19
Beginning Clock Time: 11:11

Total Sampling Time: 146 min
Recording Interval: 1 min
Background Sample Volume: _____ cubic feet

Meter Box Y Factor: 1.009 (1) 0.996 (2) 0.998 (Amb)

Barometric Pressure:	Begin	Middle	End	Average
	28.50		28.47	28.49

0

OMNI Equipment Numbers: _____

PM Control Modules: 371, 372
Dilution Tunnel MW(dry): 29.00 lb/lb-mole
Dilution Tunnel MW(wet): 28.78 lb/lb-mole
Dilution Tunnel H2O: 2.00 percent
Dilution Tunnel Static: -0.109 "H2O
Tunnel Area: 0.19635 ft2
Pitot Tube Cp: 0.99

Avg. Tunnel Velocity: #DIV/0! ft/sec.
Initial Tunnel Flow: 199.6 scfm
Average Tunnel Flow: #DIV/0! scfm
Post-Test Leak Check (1): 0.000 cfm @ 10 in. Hg
Post-Test Leak Check (2): 0.000 cfm @ 10 in. Hg
Average Test Piece Fuel Moisture: 21.24 Dry Basis %

Technician Signature: _____

Velocity Traverse Data	Pt.1	Pt.2	Pt.3	Pt.4	Pt.5	Pt.6	Pt.7	Pt.8	Center	
Initial dP	0.070	0.078	0.074	0.074	0.068	0.078	0.072	0.064	0.072	"H2O
Temp:	73	73	73	73	73	73	73	73	72	°F

V_{strav} 18.33 ft/sec V_{scent} 18.29 ft/sec F_p 1.002

	Particulate Sampling Data														Fuel Weight (lb)		Temperature Data (°F)												Stack Gas Data		
Elapsed Time (min)	Gas Meter 1 (ft^3)	Gas Meter 2 (ft^3)	Sample Rate 1 (cfm)	Sample Rate 2 (cfm)	Orifice dH 1 ("H_2O)	Meter 1 Temp (°F)	Meter 1 Vacuum ("Hg)	Orifice dH 2 ("H_2O)	Meter 2 Temp (°F)	Meter 2 Vacuum ("Hg)	Dilution Tunnel (°F)	Dilution Tunnel Center dP	Pro. Rate 1	Pro. Rate 2	Scale Reading	Weight Change	Firebox Top	Firebox Bottom	Firebox Back	Firebox Left	Firebox Right	Avg. Stove Surface	Catalyst Exit	Stack	Filter 1	Dryer Exit 1	Filter 2	Dryer Exit 2	Ambient	Draft ("H_2O)	CO_2 (%)	CO (%)
35															10.0		486	316	281	358	362	361	1025	457	88	56	86	57	68	-0.076	11.43	0.04
36															9.9		486	316	281	358	362	361	1020	456	88	56	86	57	67	-0.076	11.28	0.04
37															9.8		485	316	281	358	363	361	1020	457	88	56	86	57	69	-0.077	11.16	0.04
38															9.7		485	316	280	358	364	361	1025	459	88	56	86	57	69	-0.076	11.08	0.05
39															9.5		484	317	281	357	364	361	1023	457	88	56	86	57	69	-0.076	11.05	0.04
40															9.4		483	317	280	357	365	360	1009	454	88	56	86	57	68	-0.076	11.11	0.03
41															9.3		481	318	281	357	366	361	1004	454	88	56	86	57	69	-0.075	11.24	0.03
42															9.2		479	318	281	357	366	360	1001	453	88	56	86	57	69	-0.075	11.43	0.02
43															9.1		478	319	281	358	367	361	995	449	88	56	86	57	69	-0.075	11.7	0.01
44															8.9		476	320	282	358	367	361	991	448	88	56	86	57	69	-0.075	11.94	0
45															8.8		476	321	282	358	368	361	990	447	87	56	86	57	69	-0.075	12.2	0
46															8.7		475	322	282	359	369	361	988	445	87	56	87	57	70	-0.075	12.45	-0.01
47															8.5		476	323	283	359	369	362	990	447	88	56	87	58	70	-0.075	12.79	-0.01
48															8.3		477	325	283	360	371	363	995	446	88	56	87	58	69	-0.075	13.11	-0.02
49															8.2		480	326	284	361	372	365	1011	448	88	56	87	58	70	-0.075	13.58	-0.03
50															8.1		485	328	285	362	373	367	1021	451	88	56	87	58	69	-0.076	13.98	-0.03
51															7.9		490	331	286	363	374	369	1029	453	88	57	87	58	69	-0.075	14.33	-0.02
52															7.8		496	333	287	364	375	371	1025	455	88	57	87	58	69	-0.075	14.47	0.03
53															7.6		501	336	288	366	377	374	1022	454	89	57	87	58	70	-0.077	14.15	0.03
54															7.5		505	339	289	367	378	376	1007	453	88	57	87	58	70	-0.075	13.94	-0.02
55															7.4		507	341	290	369	380	377	994	450	88	57	88	58	70	-0.075	13.5	-0.03
56															7.3		509	344	291	371	381	379	988	446	88	57	88	58	70	-0.075	13.22	-0.03
57															7.1		510	346	292	373	382	381	993	448	88	57	88	58	70	-0.075	13.24	-0.01
58															7.0		511	348	293	375	384	382	990	449	88	57	88	58	70	-0.074	13.03	-0.03
59															6.9		510	350	294	377	385	383	975	446	88	57	88	58	70	-0.073	12.53	-0.03
60															6.8		508	352	296	379	387	384	965	442	89	57	87	58	70	-0.073	12.24	-0.03
61															6.7		506	354	297	381	389	385	957	440	89	57	87	58	70	-0.073	12.02	-0.03
62															6.5		504	356	297	382	391	386	952	438	89	57	87	58	71	-0.072	11.88	-0.03
63															6.4		501	358	298	384	392	387	951	435	89	57	87	58	70	-0.072	11.79	-0.03
64															6.3		499	360	299	386	394	388	969	437	89	58	87	58	70	-0.073	11.69	-0.02
65															6.2		498	362	300	387	395	388	969	437	88	58	87	58	70	-0.073	11.53	-0.03
66															6.1		496	363	301	389	397	389	964	435	88	58	87	58	71	-0.072	11.44	-0.03
67															6.0		493	365	302	390	398	390	958	433	88	58	87	58	71	-0.073	11.51	-0.03
68															5.9		491	366	303	392	399	390	957	432	88	58	87	58	71	-0.072	11.39	-0.03
69															5.8		490	367	304	393	399	391	961	432	88	58	87	58	70	-0.072	11.21	-0.03

Wood Heater Test Data
Hign Burn efficiency Data

Run: 1

Manufacturer: Kuma Stoves
Model: Aspen LE
Tracking No.: 2357
Project No.: 0123WM011E
Test Date: 26-Feb-19
Beginning Clock Time: 11:11

Total Sampling Time: 146 min
Recording Interval: 1 min
Background Sample Volume: _____ cubic feet

Meter Box Y Factor: 1.009 (1) 0.996 (2) 0.998 (Amb)

Barometric Pressure:	Begin	Middle	End	Average
	28.50		28.47	28.49

0

OMNI Equipment Numbers: _____

PM Control Modules: 371, 372
Dilution Tunnel MW(dry): 29.00 lb/lb-mole
Dilution Tunnel MW(wet): 28.78 lb/lb-mole
Dilution Tunnel H2O: 2.00 percent
Dilution Tunnel Static: -0.109 "H2O
Tunnel Area: 0.19635 ft2
Pitot Tube Cp: 0.99

Avg. Tunnel Velocity: #DIV/0! ft/sec.
Initial Tunnel Flow: 199.6 scfm
Average Tunnel Flow: #DIV/0! scfm
Post-Test Leak Check (1): 0.000 cfm @ 10 in. Hg
Post-Test Leak Check (2): 0.000 cfm @ 10 in. Hg
Average Test Piece Fuel Moisture: 21.24 Dry Basis %

Technician Signature: _____

Velocity Traverse Data	Pt.1	Pt.2	Pt.3	Pt.4	Pt.5	Pt.6	Pt.7	Pt.8	Center	
Initial dP	0.070	0.078	0.074	0.074	0.068	0.078	0.072	0.064	0.072	"H2O
Temp:	73	73	73	73	73	73	73	73	72	°F

V_{strav} 18.33 ft/sec V_{scent} 18.29 ft/sec F_p 1.002

	Particulate Sampling Data														Fuel Weight (lb)		Temperature Data (°F)													Stack Gas Data		
Elapsed Time (min)	Gas Meter 1 (ft^3)	Gas Meter 2 (ft^3)	Sample Rate 1 (cfm)	Sample Rate 2 (cfm)	Orifice dH 1 ("H_2O)	Meter 1 Temp (°F)	Meter 1 Vacuum ("Hg)	Orifice dH 2 ("H_2O)	Meter 2 Temp (°F)	Meter 2 Vacuum ("Hg)	Dilution Tunnel (°F)	Dilution Tunnel Center dP	Pro. Rate 1	Pro. Rate 2	Scale Reading	Weight Change	Firebox Top	Firebox Bottom	Firebox Back	Firebox Left	Firebox Right	Avg. Stove Surface	Catalyst Exit	Stack	Filter 1	Dryer Exit 1	Filter 2	Dryer Exit 2	Ambient	Draft ("H_2O)	CO_2 (%)	CO (%)
70															5.7		487	367	304	394	400	390	951	430	88	58	87	58	71	-0.072	10.8	-0.03
71															5.6		485	367	305	395	400	390	947	431	88	58	87	58	70	-0.071	10.64	-0.02
72															5.5		483	367	305	396	401	390	954	428	88	58	87	58	70	-0.072	10.66	-0.02
73															5.4		482	367	306	397	401	391	970	433	88	58	87	58	70	-0.072	10.45	-0.01
74															5.3		480	367	306	398	402	391	959	431	88	58	87	58	70	-0.072	10.24	-0.01
75															5.3		478	367	307	398	402	390	949	431	88	58	87	58	70	-0.071	10.19	-0.01
76															5.2		475	367	307	399	402	390	948	431	88	58	87	58	71	-0.072	10.07	-0.01
77															5.1		472	366	308	400	402	390	942	430	88	58	87	58	70	-0.071	10.02	-0.01
78															5.0		470	366	308	400	402	389	943	430	88	58	87	58	72	-0.072	9.95	-0.01
79															4.9		467	365	309	401	402	389	939	429	88	58	87	58	72	-0.071	9.91	-0.01
80															4.8		464	365	310	401	402	388	934	429	88	58	87	58	73	-0.071	9.88	-0.01
81															4.7		461	365	311	401	402	388	929	429	88	58	87	58	71	-0.071	9.86	-0.01
82															4.7		458	365	311	401	402	387	923	427	88	58	87	58	71	-0.071	9.9	-0.01
83															4.6		455	365	312	401	402	387	927	427	88	58	87	58	72	-0.071	9.77	-0.01
84															4.5		453	365	313	402	402	387	928	428	88	58	87	58	70	-0.071	9.74	-0.01
85															4.4		451	365	315	402	401	387	933	427	88	58	87	58	72	-0.071	9.72	-0.01
86															4.4		450	366	315	402	401	387	930	425	88	58	87	58	71	-0.071	9.59	-0.01
87															4.2		448	366	317	402	401	387	920	423	88	58	88	58	70	-0.070	9.47	-0.01
88															4.2		445	366	318	402	401	386	911	422	88	58	88	58	70	-0.070	9.39	-0.01
89															4.1		442	367	320	402	401	386	904	420	88	58	88	58	71	-0.070	9.35	-0.01
90															4.1		439	367	321	402	400	386	894	418	88	58	88	58	71	-0.070	9.34	-0.02
91															4.0		436	367	323	402	400	386	893	416	88	58	88	58	71	-0.070	9.47	-0.02
92															3.9		434	368	325	402	399	386	887	413	89	58	88	58	71	-0.071	9.49	-0.02
93															3.8		431	369	327	402	400	386	887	412	89	58	88	58	72	-0.070	9.49	-0.02
94															3.7		428	369	328	402	399	385	890	411	89	58	88	58	71	-0.070	9.58	-0.03
95															3.6		427	370	330	402	399	386	889	411	89	58	88	58	71	-0.069	9.58	-0.03
96															3.6		425	371	332	402	399	386	893	410	89	58	88	58	71	-0.069	9.63	-0.03
97															3.5		424	372	334	402	398	386	895	410	89	58	88	58	71	-0.069	9.56	-0.03
98															3.4		423	373	336	402	399	387	897	410	89	58	88	58	70	-0.069	9.56	-0.02
99															3.4		423	375	338	402	398	387	906	412	89	59	88	58	70	-0.069	9.37	-0.02
100															3.3		424	376	340	402	399	388	914	415	88	59	88	58	69	-0.069	9.23	-0.02
101															3.2		424	377	342	403	398	389	915	415	88	58	88	58	70	-0.069	9.15	-0.01
102															3.1		425	378	343	403	398	389	923	417	88	59	88	58	69	-0.065	9.16	-0.02
103															3.1		425	378	344	403	398	390	916	414	88	59	88	58	71	-0.064	9.07	-0.02
104															3.0		424	378	346	403	398	390	904	413	88	59	88	58	71	-0.064	9.16	-0.02

Wood Heater Test Data
Hign Burn efficiency Data

Run: 1

Manufacturer: Kuma Stoves
Model: Aspen LE
Tracking No.: 2357
Project No.: 0123WM011E
Test Date: 26-Feb-19
Beginning Clock Time: 11:11

Total Sampling Time: 146 min
Recording Interval: 1 min
Background Sample Volume: _____ cubic feet

Meter Box Y Factor: 1.009 (1) 0.996 (2) 0.998 (Amb)

Barometric Pressure:	Begin	Middle	End	Average
	28.50		28.47	28.49

0

OMNI Equipment Numbers: _____

PM Control Modules: 371, 372
Dilution Tunnel MW(dry): 29.00 lb/lb-mole
Dilution Tunnel MW(wet): 28.78 lb/lb-mole
Dilution Tunnel H2O: 2.00 percent
Dilution Tunnel Static: -0.109 "H2O
Tunnel Area: 0.19635 ft2
Pitot Tube Cp: 0.99

Avg. Tunnel Velocity: #DIV/0! ft/sec.
Initial Tunnel Flow: 199.6 scfm
Average Tunnel Flow: #DIV/0! scfm
Post-Test Leak Check (1): 0.000 cfm @ 10 in. Hg
Post-Test Leak Check (2): 0.000 cfm @ 10 in. Hg
Average Test Piece Fuel Moisture: 21.24 Dry Basis %

Technician Signature: _____

Velocity Traverse Data	Pt.1	Pt.2	Pt.3	Pt.4	Pt.5	Pt.6	Pt.7	Pt.8	Center	
Initial dP	0.070	0.078	0.074	0.074	0.068	0.078	0.072	0.064	0.072	"H2O
Temp:	73	73	73	73	73	73	73	73	72	°F

V_{strav} 18.33 ft/sec V_{scent} 18.29 ft/sec F_p 1.002

	Particulate Sampling Data														Fuel Weight (lb)		Temperature Data (°F)													Stack Gas Data		
Elapsed Time (min)	Gas Meter 1 (ft^3)	Gas Meter 2 (ft^3)	Sample Rate 1 (cfm)	Sample Rate 2 (cfm)	Orifice dH 1 ("H_2O)	Meter 1 Temp (°F)	Meter 1 Vacuum ("Hg)	Orifice dH 2 ("H_2O)	Meter 2 Temp (°F)	Meter 2 Vacuum ("Hg)	Dilution Tunnel (°F)	Dilution Tunnel Center dP	Pro. Rate 1	Pro. Rate 2	Scale Reading	Weight Change	Firebox Top	Firebox Bottom	Firebox Back	Firebox Left	Firebox Right	Avg. Stove Surface	Catalyst Exit	Stack	Filter 1	Dryer Exit 1	Filter 2	Dryer Exit 2	Ambient	Draft ("H_2O)	CO_2 (%)	CO (%)
105															2.9		424	378	346	403	397	390	902	413	88	59	88	58	70	-0.064	9.23	-0.02
106															2.9		423	378	347	403	397	390	896	412	88	59	88	58	70	-0.063	9.22	-0.03
107															2.8		422	377	347	403	397	389	893	411	88	59	88	58	70	-0.064	9.18	-0.03
108															2.7		422	376	347	403	396	389	890	409	88	59	88	58	70	-0.063	9.16	-0.03
109															2.6		421	375	347	403	396	388	887	409	88	59	88	58	70	-0.063	9.22	-0.03
110															2.6		421	374	347	404	396	388	889	408	88	59	88	58	70	-0.064	9.28	-0.03
111															2.5		421	373	346	404	396	388	888	408	88	59	88	58	70	-0.063	9.32	-0.03
112															2.4		421	372	345	404	396	388	886	407	88	59	88	58	70	-0.064	9.33	-0.03
113															2.3		421	371	344	404	396	387	889	407	88	59	88	58	70	-0.063	9.43	-0.03
114															2.3		422	370	343	405	396	387	891	407	88	59	88	58	70	-0.064	9.51	-0.03
115															2.2		422	369	342	405	396	387	890	407	88	59	88	58	70	-0.064	9.61	-0.03
116															2.2		423	368	341	406	396	387	892	407	88	59	88	58	69	-0.063	9.59	-0.03
117															2.1		423	367	341	407	397	387	895	406	88	59	88	58	69	-0.064	9.59	-0.03
118															2.0		424	366	340	408	397	387	893	407	88	59	88	58	70	-0.065	9.81	-0.03
119															1.9		424	365	339	408	397	387	894	407	88	59	88	58	70	-0.065	9.88	-0.04
120															1.8		425	364	338	409	398	387	894	407	88	59	88	58	70	-0.064	10.25	-0.04
121															1.8		426	363	337	410	398	387	899	407	89	59	89	58	70	-0.064	10.52	-0.04
122															1.6		427	363	336	412	399	387	909	407	88	59	88	58	71	-0.064	10.66	-0.04
123															1.6		430	363	335	414	399	388	914	409	88	59	88	58	71	-0.065	10.88	-0.04
124															1.5		433	362	335	415	400	389	923	412	88	59	87	58	70	-0.065	10.83	-0.04
125															1.4		435	362	334	417	401	390	926	412	87	59	87	58	71	-0.065	10.71	-0.04
126															1.3		438	361	334	419	402	391	928	413	87	59	87	58	71	-0.066	10.66	-0.04
127															1.3		440	361	333	421	403	392	925	414	87	59	86	58	71	-0.066	10.52	-0.04
128															1.2		442	360	332	423	404	392	921	413	87	59	86	58	71	-0.065	10.41	-0.04
129															1.1		443	360	332	425	405	393	918	412	87	59	86	58	71	-0.065	10.4	-0.04
130															1.0		444	360	331	427	407	394	921	413	87	59	86	58	71	-0.065	10.47	-0.04
131															1.0		445	359	331	429	409	395	921	412	87	59	86	58	71	-0.064	10.52	-0.04
132															0.9		446	359	330	431	411	395	914	413	87	59	86	58	71	-0.065	11.2	-0.05
133															0.8		447	359	330	432	412	396	914	411	88	59	86	58	71	-0.064	11.28	-0.04
134															0.8		448	359	330	434	414	397	916	412	88	59	86	58	72	-0.063	11.22	-0.04
135															0.7		449	359	330	436	416	398	907	411	87	59	87	58	71	-0.063	11.08	-0.03
136															0.6		450	359	330	437	418	399	912	411	87	59	87	58	71	-0.063	10.99	-0.04
137															0.5		451	359	331	439	420	400	917	411	87	59	87	58	71	-0.062	11.04	-0.04
138															0.4		452	360	331	440	422	401	911	413	87	59	87	58	71	-0.062	10.9	-0.05
139															0.4		452	360	332	442	425	402	907	410	87	59	87	58	72	-0.063	10.69	-0.05

Wood Heater Test Data
Hign Burn efficiency Data

Run: 1

Manufacturer: Kuma Stoves
Model: Aspen LE
Tracking No.: 2357
Project No.: 0123WM011E
Test Date: 26-Feb-19
Beginning Clock Time: 11:11

Total Sampling Time: 146 min
Recording Interval: 1 min
Background Sample Volume: _____ cubic feet

Meter Box Y Factor: 1.009 (1) 0.996 (2) 0.998 (Amb)

Barometric Pressure:	Begin	Middle	End	Average
	28.50		28.47	28.49

0

OMNI Equipment Numbers: _____

PM Control Modules: 371, 372
Dilution Tunnel MW(dry): 29.00 lb/lb-mole
Dilution Tunnel MW(wet): 28.78 lb/lb-mole
Dilution Tunnel H2O: 2.00 percent
Dilution Tunnel Static: -0.109 "H2O
Tunnel Area: 0.19635 ft2
Pitot Tube Cp: 0.99

Avg. Tunnel Velocity: #DIV/0! ft/sec.
Initial Tunnel Flow: 199.6 scfm
Average Tunnel Flow: #DIV/0! scfm
Post-Test Leak Check (1): 0.000 cfm @ 10 in. Hg
Post-Test Leak Check (2): 0.000 cfm @ 10 in. Hg
Average Test Piece Fuel Moisture: 21.24 Dry Basis %

Technician Signature: _____

Velocity Traverse Data	Pt.1	Pt.2	Pt.3	Pt.4	Pt.5	Pt.6	Pt.7	Pt.8	Center	
Initial dP	0.070	0.078	0.074	0.074	0.068	0.078	0.072	0.064	0.072	"H2O
Temp:	73	73	73	73	73	73	73	73	72	°F

V_{strav} 18.33 ft/sec V_{scent} 18.29 ft/sec F_p 1.002

	Particulate Sampling Data														Fuel Weight (lb)		Temperature Data (°F)													Stack Gas Data		
Elapsed Time (min)	Gas Meter 1 (ft^3)	Gas Meter 2 (ft^3)	Sample Rate 1 (cfm)	Sample Rate 2 (cfm)	Orifice dH 1 ("H_2O)	Meter 1 Temp (°F)	Meter 1 Vacuum ("Hg)	Orifice dH 2 ("H_2O)	Meter 2 Temp (°F)	Meter 2 Vacuum ("Hg)	Dilution Tunnel (°F)	Dilution Tunnel Center dP	Pro. Rate 1	Pro. Rate 2	Scale Reading	Weight Change	Firebox Top	Firebox Bottom	Firebox Back	Firebox Left	Firebox Right	Avg. Stove Surface	Catalyst Exit	Stack	Filter 1	Dryer Exit 1	Filter 2	Dryer Exit 2	Ambient	Draft ("H_2O)	CO_2 (%)	CO (%)
140															0.3		452	360	332	443	427	403	909	409	88	59	87	58	71	-0.064	10.75	-0.05
141															0.3		451	361	332	445	429	404	905	407	88	59	87	58	71	-0.062	10.71	-0.05
142															0.2		450	362	333	447	431	405	901	405	88	59	87	58	72	-0.062	10.36	-0.05
143															0.1		449	362	334	449	433	405	896	404	88	59	87	58	71	-0.062	9.97	-0.05
144															0.1		447	363	335	451	434	406	885	403	88	59	87	58	71	-0.062	9.64	-0.04
145															0.1		444	363	336	453	436	406	875	401	88	59	87	58	72	-0.062	9.49	-0.04
146															0.0		440	364	337	455	438	407	861	399	88	59	87	58	72	-0.062	9.23	-0.04

Wood Heater Test Data
Hign Burn efficiency Data

Run: 1

Manufacturer: Kuma Stoves
Model: Aspen LE
Tracking No.: 2357
Project No.: 0123WM011E
Test Date: 26-Feb-19
Beginning Clock Time: 11:11

Total Sampling Time: 146 min
Recording Interval: 1 min
Background Sample Volume: _____ cubic feet

Meter Box Y Factor: 1.009 (1) 0.996 (2) 0.998 (Amb)

Barometric Pressure:	Begin	Middle	End	Average
	28.50		28.47	28.49

0

OMNI Equipment Numbers: _____

PM Control Modules: 371, 372
Dilution Tunnel MW(dry): 29.00 lb/lb-mole
Dilution Tunnel MW(wet): 28.78 lb/lb-mole
Dilution Tunnel H2O: 2.00 percent
Dilution Tunnel Static: -0.109 "H2O
Tunnel Area: 0.19635 ft2
Pitot Tube Cp: 0.99

Avg. Tunnel Velocity: #DIV/0! ft/sec.
Initial Tunnel Flow: 199.6 scfm
Average Tunnel Flow: #DIV/0! scfm
Post-Test Leak Check (1): 0.000 cfm @ 10 in. Hg
Post-Test Leak Check (2): 0.000 cfm @ 10 in. Hg
Average Test Piece Fuel Moisture: 21.24 Dry Basis %

Technician Signature: _____

Velocity Traverse Data										
	Pt.1	Pt.2	Pt.3	Pt.4	Pt.5	Pt.6	Pt.7	Pt.8	Center	
Initial dP	0.070	0.078	0.074	0.074	0.068	0.078	0.072	0.064	0.072	"H2O
Temp:	73	73	73	73	73	73	73	73	72	°F

V_{strav} 18.33 ft/sec V_{scent} 18.29 ft/sec F_p 1.002

	Particulate Sampling Data														Fuel Weight (lb)		Temperature Data (°F)													Stack Gas Data		
Elapsed Time (min)	Gas Meter 1 (ft^3)	Gas Meter 2 (ft^3)	Sample Rate 1 (cfm)	Sample Rate 2 (cfm)	Orifice dH 1 ("H_2O)	Meter 1 Temp (°F)	Meter 1 Vacuum ("Hg)	Orifice dH 2 ("H_2O)	Meter 2 Temp (°F)	Meter 2 Vacuum ("Hg)	Dilution Tunnel (°F)	Dilution Tunnel Center dP	Pro. Rate 1	Pro. Rate 2	Scale Reading	Weight Change	Firebox Top	Firebox Bottom	Firebox Back	Firebox Left	Firebox Right	Avg. Stove Surface	Catalyst Exit	Stack	Filter 1	Dryer Exit 1	Filter 2	Dryer Exit 2	Ambient	Draft ("H_2O)	CO_2 (%)	CO (%)
Avg/Tot	0.000	0.000	#DIV/0!	#DIV/0!	#DIV/0!	#DIV/0!		#DIV/0!	#DIV/0!		#DIV/0!	#DIV/0!	#DIV/0!	#DIV/0!								43.6				57	87	57	70	-0.070		

Wood Heater Test Results

Manufacturer: Kuma Stoves
Model: Aspen LE
Project No.: 0123WM011E
Tracking No.: 2357
Run: 1
Test Date: 02/26/19

Burn Rate	**2.26**	**kg/hr dry**
Average Tunnel Temperature	#DIV/0!	degrees Fahrenheit
Average Gas Velocity in Dilution Tunnel - vs	#DIV/0!	feet/second
Average Gas Flow Rate in Dilution Tunnel - Qsd	#DIV/0!	dscf/hour
Average Delta p	#DIV/0!	inches H20
Total Time of Test	146	minutes

Technician Signature: _____

Wood Heater Efficiency Results - CSA B415.1

Manufacturer: Kuma Stoves
Model: Aspen LE
Date: 02/26/19
Run: 1
Control #: 0123WM011E
Test Duration: 146
Output Category: IV

Technician Signature: 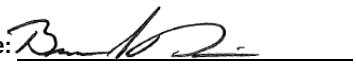

Test Results in Accordance with CSA B415.1-09

	HHV Basis	LHV Basis
Overall Efficiency	75.8%	81.9%
Combustion Efficiency	99.5%	99.5%
Heat Transfer Efficiency	76%	82.3%

Output Rate (kJ/h)	33,861	32,121	**(Btu/h)**
Burn Rate (kg/h)	2.26	4.97	**(lb/h)**
Input (kJ/h)	44,695	42,398	**(Btu/h)**

Test Load Weight (dry kg)	5.49	12.10	**dry lb**
MC wet (%)	17.51897064		
MC dry (%)	21.24		
Particulate (g)	7.15		
CO (g)	2		
Test Duration (h)	2.43		

Emissions	Particulate	CO
g/MJ Output	0.09	0.03
g/kg Dry Fuel	1.30	0.40
g/h	2.94	0.90
lb/MM Btu Output	0.20	0.06

Air/Fuel Ratio (A/F)	10.36

VERSION: **2.2** **12/14/2009**

OMNI-Test Laboratories, Inc.

Wood Heater Run Sheets

Client: Kuma Stoves Project Number: 0123WM011E Run Number: 1
Model: Aspen LE Tracking Number: 2357 Date: 2/26/19
Test Crew: B Davis
OMNI Equipment ID numbers: 133, 243A, 371, 372, 410, 424, 559, 592, 650, 637

Wood Heater Run Notes

Air Control Settings

Primary: fully open

Secondary: fixed

Tertiary/Pilot: N/A

Fan: On High

Preburn Notes

Time	Notes
Ø	Zero weight before test - No fuel in fire box 439.3
	Torched used for 25 seconds, door closed @ 45 seconds, 15 minutes bypass closed. Fan off for start up load
61	At 20 lbs loaded High fuel load.

Test Notes

Sketch test fuel configuration:

See photo

Start up procedures & Timeline:

Bypass: ~~Automatic~~ open until 1:35 min
Fuel loaded by: by 1:35 min
Door closed at: 1:35 min
Primary air: Fully open

Notes: Fan on High at 5:00 min
High burn fuel load 2:27 min

Time	Notes
60	Changed front filter in fan A
115	changed front filter in fan B

Technician Signature: [signature] Date: 4/3/19

OMNI-Test Laboratories, Inc.

Wood Heater Run Sheets

Client: Kuma Stoves Project Number: 0123WM011E Run Number: 1
Model: Aspen LE Tracking Number: 2357 Date: 2/26/19
Test Crew: B Davis
OMNI Equipment ID numbers:

Wood Heater Supplemental Data

Start Time: 10:54
Stop Time: 1422

Booth #: N/A

Stack Gas Leak Check:
Initial: good Final: good

Sample Train Leak Check:
A: 0.0 @ 10 "Hg
B: 0.0 @ 10 "Hg

Calibrations: Span Gas CO_2: 12.40 CO: 2.48

	Pre Test		Post Test	
	Zero	Span	Zero	Span
Time	10:33	10:36	1450	1450
CO_2	0.00	12.43	0.24	12.40
CO	-0.01	2.48	-0.074	2.37

Air Velocity (ft/min): Initial: 450 Final: 450
Scale Audit (lbs): Initial: 10.0 Final: 10.0
Pitot Tube Leak Test: Initial: good Final: good
Stack Diameter (in): 6"
Induced Draft: 0.0
% Smoke Capture: 100 %
Flue Pipe Cleaned Prior to First Test in Series:
Date: 2/25/19 Initials: BN

	Initial	Middle	Ending
P_b (in/Hg)	28.50		28.47
RH (%)	22%		20%
Ambient (°F)	60		72

Tunnel Traverse

Microtector Reading	dP (in H_2O)	T(°F)
	.070	73
	.078	73
	.074	73
	.074	73
	.068	73
	.078	73
	.072	73
	.064	73
Center:		
	.072	73

Tunnel Static Pressure (in H_2O):	
Beginning of Test	End of Test
-.109	-.109

Background Filter Volume: 30.432

Technician Signature:

Date: 4/3/19

Run 2

Low Burn

Wood Heater Test Data
Low Burn Emissions Data

Run: 2

Manufacturer: Kuma Stoves
Model: Aspen LE
Tracking No.: 2357
Project No.: 0123WM011E
Test Date: 26-Feb-19
Beginning Clock Time: 15:15

Total Sampling Time: 659 min
Recording Interval: 1 min
Background Sample Volume: 97.796 cubic feet

Meter Box Y Factor: 1.009 (1) 0.996 (2) 0.996 (Amb)

Barometric Pressure:	Begin	Middle	End	Average	
	28.47	28.44	28.4	28.44	0

OMNI Equipment Numbers:

PM Control Modules: 371, 372
Dilution Tunnel MW(dry): 29.00 lb/lb-mole
Dilution Tunnel MW(wet): 28.78 lb/lb-mole
Dilution Tunnel H2O: 2.00 percent
Dilution Tunnel Static: -0.110 "H2O
Tunnel Area: 0.19635 ft2
Pitot Tube Cp: 0.99

Avg. Tunnel Velocity: 18.29 ft/sec.
Initial Tunnel Flow: 192.7 scfm
Average Tunnel Flow: 194.5 scfm
Post-Test Leak Check (1): 0.000 cfm @ 9 in. Hg
Post-Test Leak Check (2): 0.000 cfm @ 10 in. Hg
Average Test Piece Fuel Moisture: 20.05 Dry Basis %

Technician Signature:

Velocity Traverse Data	Pt.1	Pt.2	Pt.3	Pt.4	Pt.5	Pt.6	Pt.7	Pt.8	Center	
Initial dP	0.068	0.072	0.072	0.070	0.066	0.068	0.076	0.070	0.070	"H2O
Temp:	96	96	96	96	95	95	95	95	96	°F

V_{strav} 18.47 ft/sec V_{scent} 18.45 ft/sec F_p 1.001

	Particulate Sampling Data														Fuel Weight (lb)		Temperature Data (°F)													Stack Gas Data		
Elapsed Time (min)	Gas Meter 1 (ft^3)	Gas Meter 2 (ft^3)	Sample Rate 1 (cfm)	Sample Rate 2 (cfm)	Orifice dH 1 ("H_2O)	Meter 1 Temp (°F)	Meter 1 Vacuum ("Hg)	Orifice dH 2 ("H_2O)	Meter 2 Temp (°F)	Meter 2 Vacuum ("Hg)	Dilution Tunnel (°F)	Dilution Tunnel Center dP	Pro. Rate 1	Pro. Rate 2	Scale Reading	Weight Change	Firebox Top	Firebox Bottom	Firebox Back	Firebox Left	Firebox Right	Avg. Stove Surface	Catalyst Exit	Stack	Filter 1	Dryer Exit 1	Filter 2	Dryer Exit 2	Ambient	Draft ("H_2O)	CO_2 (%)	CO (%)
0	0.000	0.000			2.02	74	-0.79	1.77	74	-1.1	106	0.070			19.9		397	366	299	424	409	379	717	355	85	58	82	58	73	-0.055	5.96	0.07
1	0.145	0.156	0.15	0.16	1.73	74	-0.94	1.39	74	-1.9	141	0.070	102	104	19.9	0	396	368	307	425	409	381	444	353	87	58	83	58	73	-0.049	3.97	0.39
2	0.290	0.311	0.15	0.16	1.72	74	-1.2	1.39	74	-1.8	111	0.070	99	101	19.7	-0.175148	388	369	303	424	408	378	483	309	88	58	83	58	73	-0.053	2.21	0.45
3	0.434	0.467	0.14	0.16	1.69	74	-0.8	1.38	74	-1.7	113	0.070	99	102	19.6	-0.144684	393	370	301	424	408	379	784	354	87	58	83	58	72	-0.062	7.93	0.08
4	0.577	0.621	0.14	0.15	1.69	74	-1.11	1.37	74	-1.8	113	0.070	98	101	19.5	-0.085937	403	370	299	423	407	380	852	386	86	58	83	58	72	-0.064	9.82	0.05
5	0.726	0.777	0.15	0.16	1.84	74	-1	1.40	74	-1.7	114	0.070	102	102	19.3	-0.141174	415	370	297	422	406	382	872	403	85	59	83	58	72	-0.065	10.33	0.05
6	0.875	0.933	0.15	0.16	1.82	74	-1.39	1.39	74	-1.7	114	0.070	102	102	19.2	-0.141938	427	370	295	420	404	383	899	415	84	59	83	58	72	-0.067	10.94	0.04
7	1.024	1.089	0.15	0.16	1.81	74	-1.4	1.39	74	-1.8	114	0.070	102	102	19.1	-0.139312	441	369	294	418	402	385	914	425	83	59	83	58	72	-0.068	11.51	0.03
8	1.173	1.244	0.15	0.16	1.79	74	-1.34	1.38	74	-1.9	116	0.070	102	102	18.9	-0.137513	456	368	293	416	399	386	931	434	83	59	83	58	72	-0.069	12.1	0.03
9	1.321	1.399	0.15	0.16	1.79	74	-1.41	1.38	74	-1.9	116	0.070	102	102	18.7	-0.187103	475	367	292	414	396	389	991	445	83	59	83	58	72	-0.070	13.77	0.03
10	1.469	1.554	0.15	0.16	1.79	74	-1.39	1.37	74	-1.8	117	0.070	102	102	18.6	-0.155365	494	365	291	412	393	391	1005	451	82	59	83	58	72	-0.071	13.71	0.01
11	1.616	1.710	0.15	0.16	1.79	74	-1.23	1.40	74	-1.7	118	0.070	101	102	18.4	-0.188537	514	364	290	410	391	394	1027	457	82	59	83	58	73	-0.072	13.94	0.02
12	1.764	1.866	0.15	0.16	1.79	74	-0.95	1.39	74	-2	119	0.070	102	103	18.2	-0.157258	534	362	289	408	388	396	1044	462	83	59	83	59	73	-0.072	14.25	0.03
13	1.911	2.021	0.15	0.16	1.77	74	-1.05	1.39	74	-1.9	119	0.070	101	102	18.1	-0.144073	553	361	288	407	385	399	1071	468	85	59	83	59	73	-0.072	14.79	0.03
14	2.058	2.177	0.15	0.16	1.80	74	-1.1	1.41	74	-2	119	0.070	101	103	17.9	-0.186096	574	360	287	406	383	402	1090	474	87	59	83	59	73	-0.075	15.19	0.05
15	2.206	2.334	0.15	0.16	1.79	74	-1.06	1.41	74	-2.1	121	0.070	102	103	17.7	-0.172791	593	359	286	404	380	404	1106	479	88	59	82	59	73	-0.075	15.33	0.07
16	2.354	2.492	0.15	0.16	1.80	75	-1.27	1.41	74	-1.8	110	0.070	101	103	17.6	-0.138183	606	358	291	403	379	407	1026	389	90	59	82	59	73	-0.067	15.47	1.52
17	2.501	2.649	0.15	0.16	1.79	75	-1.26	1.42	74	-1.8	109	0.070	100	102	17.5	-0.09549	617	357	294	402	377	409	1045	353	91	59	82	59	73	-0.062	12.33	0.07
18	2.649	2.806	0.15	0.16	1.80	75	-1.38	1.41	74	-2	107	0.070	101	102	17.4	-0.100311	624	356	295	401	375	410	1010	337	91	59	83	59	73	-0.060	9.45	0.04
19	2.797	2.964	0.15	0.16	1.80	75	-1.27	1.41	74	-2	107	0.070	101	103	17.3	-0.049255	624	356	296	400	373	410	966	325	92	59	84	59	72	-0.058	8.15	0.03
20	2.944	3.121	0.15	0.16	1.80	75	-1.29	1.41	74	-2	106	0.070	100	102	17.3	-0.064759	620	355	297	399	371	408	939	317	92	59	84	59	73	-0.057	7.67	0.02
21	3.091	3.277	0.15	0.16	1.80	75	-1.23	1.41	74	-2	105	0.070	100	101	17.2	-0.064789	614	354	297	398	369	406	924	310	92	59	84	59	73	-0.056	7.59	0.02
22	3.239	3.434	0.15	0.16	1.80	75	-1.44	1.41	74	-2	105	0.070	101	102	17.2	-0.045501	607	352	297	397	367	404	917	305	91	59	85	59	72	-0.055	7.69	0.02
23	3.386	3.591	0.15	0.16	1.79	75	-1.31	1.40	74	-1.8	103	0.070	100	102	17.1	-0.072174	599	351	297	395	365	401	914	299	89	59	85	59	72	-0.055	7.84	0.02
24	3.534	3.748	0.15	0.16	1.80	75	-1.21	1.41	74	-2	104	0.070	101	102	17.0	-0.0607	592	350	297	393	363	399	912	297	87	59	85	59	72	-0.054	7.98	0.02
25	3.682	3.905	0.15	0.16	1.78	75	-1.05	1.40	74	-1.8	103	0.070	100	102	17.0	-0.067657	585	348	297	391	361	396	911	294	85	59	85	59	72	-0.055	8.15	0.02
26	3.830	4.062	0.15	0.16	1.79	75	-1.36	1.41	74	-1.8	103	0.070	100	102	16.9	-0.041107	578	347	297	390	359	394	910	292	84	59	85	59	72	-0.054	8.25	0.02
27	3.977	4.219	0.15	0.16	1.80	75	-1.42	1.39	74	-1.9	103	0.070	100	102	16.8	-0.077179	572	345	296	388	356	391	906	289	83	59	85	59	71	-0.053	8.27	0.02
28	4.125	4.376	0.15	0.16	1.79	75	-1.08	1.41	74	-2	102	0.070	100	102	16.8	-0.085816	566	343	296	387	354	389	900	287	83	59	85	60	72	-0.053	8.37	0.03
29	4.272	4.532	0.15	0.16	1.79	75	-0.93	1.41	74	-2	102	0.070	100	101	16.7	-0.047607	559	342	295	385	352	387	896	285	82	59	85	60	72	-0.052	8.45	0.03
30	4.420	4.689	0.15	0.16	1.79	75	-1.06	1.40	74	-1.9	102	0.070	100	102	16.6	-0.096161	553	340	295	384	350	384	894	284	83	59	85	60	73	-0.052	8.52	0.03
31	4.568	4.845	0.15	0.16	1.78	75	-1	1.40	74	-2	101	0.070	100	101	16.6	-0.044586	543	338	295	382	348	381	889	283	85	59	85	60	73	-0.052	8.49	0.03
32	4.715	5.002	0.15	0.16	1.78	75	-1.32	1.39	74	-1.8	101	0.070	100	102	16.5	-0.109192	534	336	295	381	346	378	884	279	87	59	85	60	72	-0.052	8.43	0.03
33	4.863	5.159	0.15	0.16	1.78	75	-1.03	1.40	74	-1.9	100	0.070	100	101	16.4	-0.03418	526	335	294	380	343	376	879	276	88	59	85	60	73	-0.051	8.5	0.03
34	5.010	5.315	0.15	0.16	1.78	75	-1.17	1.40	75	-2	101	0.070	100	101	16.3	-0.078949	518	332	293	378	341	372	874	274	88	59	85	60	73	-0.050	8.63	0.03

Wood Heater Test Data
Low Burn Emissions Data

Run: 2

Manufacturer: Kuma Stoves
Model: Aspen LE
Tracking No.: 2357
Project No.: 0123WM011E
Test Date: 26-Feb-19
Beginning Clock Time: 15:15

Total Sampling Time: 659 min
Recording Interval: 1 min
Background Sample Volume: 97.796 cubic feet

Meter Box Y Factor: 1.009 (1) 0.996 (2) 0.996 (Amb)

Barometric Pressure:	Begin	Middle	End	Average	
	28.47	28.44	28.4	28.44	0

OMNI Equipment Numbers:

PM Control Modules: 371, 372
Dilution Tunnel MW(dry): 29.00 lb/lb-mole
Dilution Tunnel MW(wet): 28.78 lb/lb-mole
Dilution Tunnel H2O: 2.00 percent
Dilution Tunnel Static: -0.110 "H2O
Tunnel Area: 0.19635 ft2
Pitot Tube Cp: 0.99

Avg. Tunnel Velocity: 18.29 ft/sec.
Initial Tunnel Flow: 192.7 scfm
Average Tunnel Flow: 194.5 scfm
Post-Test Leak Check (1): 0.000 cfm @ 9 in. Hg
Post-Test Leak Check (2): 0.000 cfm @ 10 in. Hg
Average Test Piece Fuel Moisture: 20.05 Dry Basis %

Technician Signature:

Velocity Traverse Data	Pt.1	Pt.2	Pt.3	Pt.4	Pt.5	Pt.6	Pt.7	Pt.8	Center	
Initial dP	0.068	0.072	0.072	0.070	0.066	0.068	0.076	0.070	0.070	"H2O
Temp:	96	96	96	96	95	95	95	95	96	°F

V_{strav} 18.47 ft/sec V_{scent} 18.45 ft/sec F_p 1.001

	Particulate Sampling Data														Fuel Weight (lb)		Temperature Data (°F)													Stack Gas Data		
Elapsed Time (min)	Gas Meter 1 (ft^3)	Gas Meter 2 (ft^3)	Sample Rate 1 (cfm)	Sample Rate 2 (cfm)	Orifice dH 1 ("H_2O)	Meter 1 Temp (°F)	Meter 1 Vacuum ("Hg)	Orifice dH 2 ("H_2O)	Meter 2 Temp (°F)	Meter 2 Vacuum ("Hg)	Dilution Tunnel (°F)	Dilution Tunnel Center dP	Pro. Rate 1	Pro. Rate 2	Scale Reading	Weight Change	Firebox Top	Firebox Bottom	Firebox Back	Firebox Left	Firebox Right	Avg. Stove Surface	Catalyst Exit	Stack	Filter 1	Dryer Exit 1	Filter 2	Dryer Exit 2	Ambient	Draft ("H_2O)	CO_2 (%)	CO (%)
35	5.158	5.472	0.15	0.16	1.78	75	-0.97	1.40	75	-1.8	99	0.070	100	101	16.3	-0.05899	511	329	293	377	339	370	873	272	87	59	85	60	74	-0.050	8.64	0.03
36	5.305	5.629	0.15	0.16	1.77	75	-0.97	1.40	75	-2	99	0.070	99	101	16.2	-0.082917	504	326	293	376	337	367	871	270	87	60	85	60	74	-0.050	8.68	0.03
37	5.453	5.786	0.15	0.16	1.78	75	-0.94	1.40	75	-1.8	99	0.070	100	101	16.1	-0.061767	498	323	292	375	335	365	870	268	87	60	85	60	73	-0.049	8.8	0.03
38	5.601	5.942	0.15	0.16	1.77	75	-1.38	1.40	75	-1.8	99	0.070	100	101	16.1	-0.041718	492	320	292	374	332	362	871	266	86	60	85	60	73	-0.049	8.85	0.03
39	5.748	6.099	0.15	0.16	1.76	75	-1.04	1.40	75	-2	98	0.070	99	101	16.0	-0.078033	487	317	291	373	331	360	872	265	86	60	85	60	73	-0.049	8.92	0.03
40	5.896	6.255	0.15	0.16	1.77	75	-1.38	1.40	75	-2	98	0.070	100	100	16.0	-0.05362	483	314	291	372	329	358	873	264	86	60	85	60	72	-0.049	9.04	0.03
41	6.043	6.412	0.15	0.16	1.77	75	-1.37	1.40	75	-2	98	0.070	99	101	15.9	-0.081482	479	311	290	370	327	355	877	263	86	60	85	60	73	-0.049	9.16	0.03
42	6.191	6.569	0.15	0.16	1.78	75	-1.07	1.40	75	-2	98	0.070	100	101	15.8	-0.060211	476	309	290	369	325	354	879	263	86	60	85	60	72	-0.049	9.27	0.03
43	6.339	6.726	0.15	0.16	1.79	75	-0.93	1.40	75	-1.9	97	0.070	100	101	15.8	-0.079071	473	307	290	368	323	352	879	262	86	60	85	60	72	-0.051	9.27	0.03
44	6.487	6.883	0.15	0.16	1.78	75	-1.29	1.41	75	-1.8	98	0.070	100	101	15.7	-0.056152	470	304	289	367	321	350	878	261	86	60	85	60	73	-0.048	9.24	0.03
45	6.634	7.040	0.15	0.16	1.80	75	-1.1	1.40	75	-1.9	97	0.070	99	101	15.6	-0.082794	468	302	289	366	319	349	874	260	86	60	85	60	73	-0.048	9.1	0.03
46	6.782	7.197	0.15	0.16	1.79	75	-0.93	1.40	75	-1.8	97	0.070	100	101	15.6	-0.059143	465	301	288	365	317	347	867	260	85	60	85	60	73	-0.049	9.05	0.03
47	6.930	7.353	0.15	0.16	1.80	75	-1.04	1.41	75	-2	96	0.070	100	100	15.5	-0.035492	461	299	288	363	316	345	858	259	85	60	85	60	73	-0.048	8.99	0.03
48	7.078	7.510	0.15	0.16	1.77	75	-1.42	1.40	75	-1.8	97	0.070	100	101	15.4	-0.074555	458	297	287	362	314	344	853	258	85	60	85	60	72	-0.048	8.97	0.03
49	7.225	7.667	0.15	0.16	1.80	75	-1.37	1.40	75	-2	97	0.070	99	101	15.4	-0.057892	455	296	287	361	312	342	850	256	85	60	85	60	72	-0.048	8.91	0.03
50	7.373	7.824	0.15	0.16	1.80	76	-0.94	1.40	75	-1.9	96	0.070	100	101	15.3	-0.08908	451	295	287	360	311	341	844	255	85	60	85	60	73	-0.047	8.97	0.03
51	7.520	7.981	0.15	0.16	1.80	76	-1.07	1.41	75	-1.9	96	0.070	99	101	15.3	-0.042664	448	293	286	358	309	339	841	254	85	60	85	60	72	-0.047	8.97	0.03
52	7.668	8.138	0.15	0.16	1.79	76	-1.09	1.40	75	-1.8	96	0.070	100	101	15.2	-0.057678	446	292	286	357	307	338	840	253	85	60	85	60	73	-0.047	9.04	0.03
53	7.816	8.295	0.15	0.16	1.79	76	-1.38	1.40	75	-2	96	0.070	100	101	15.1	-0.074768	443	291	286	356	306	336	838	252	85	60	85	60	72	-0.046	9.06	0.03
54	7.964	8.452	0.15	0.16	1.79	76	-0.93	1.41	75	-2	96	0.060	108	109	15.1	-0.052124	440	291	286	355	304	335	837	251	85	60	84	60	72	-0.047	9.09	0.03
55	8.111	8.609	0.15	0.16	1.78	76	-1	1.40	75	-1.8	96	0.070	99	101	15.0	-0.070832	438	290	285	354	303	334	835	250	85	60	84	60	73	-0.046	9.13	0.03
56	8.259	8.766	0.15	0.16	1.79	76	-1.16	1.41	75	-1.8	96	0.070	100	101	14.9	-0.062042	436	289	285	353	301	333	835	250	85	60	84	60	73	-0.047	9.16	0.03
57	8.407	8.923	0.15	0.16	1.79	76	-1.1	1.40	75	-1.8	95	0.070	100	101	14.9	-0.063415	434	289	285	351	300	332	835	250	85	60	84	60	72	-0.046	9.2	0.03
58	8.554	9.080	0.15	0.16	1.79	76	-0.96	1.41	75	-2	97	0.070	99	101	14.8	-0.066956	432	288	285	350	298	331	834	249	85	60	84	60	72	-0.046	9.2	0.03
59	8.702	9.237	0.15	0.16	1.78	76	-1.01	1.40	75	-2	97	0.070	100	101	14.8	-0.054016	431	288	285	349	297	330	832	248	85	60	84	60	73	-0.046	9.23	0.03
60	8.850	9.395	0.15	0.16	1.78	76	-0.99	1.40	75	-1.8	97	0.070	100	102	14.7	-0.062408	429	287	285	348	296	329	832	247	85	60	84	60	73	-0.046	9.23	0.03
61	9.001	9.551	0.15	0.16	1.86	76	-1.03	1.41	75	-1.8	97	0.070	102	100	14.6	-0.043732	427	287	284	347	294	328	832	248	85	60	84	60	74	-0.046	9.25	0.03
62	9.151	9.708	0.15	0.16	1.81	76	-0.9	1.40	75	-1.9	96	0.070	101	101	14.6	-0.094208	426	287	284	346	293	327	834	247	85	60	84	60	74	-0.046	9.2	0.03
63	9.300	9.865	0.15	0.16	1.83	76	-1.17	1.41	75	-1.8	96	0.070	100	101	14.5	-0.047729	426	286	284	345	292	327	833	247	85	60	84	60	74	-0.046	9.22	0.03
64	9.450	10.022	0.15	0.16	1.82	76	-1.35	1.40	75	-2	96	0.070	101	101	14.4	-0.089875	425	286	284	344	290	326	833	246	84	60	84	60	72	-0.045	9.23	0.03
65	9.599	10.179	0.15	0.16	1.84	76	-1.37	1.40	75	-2	95	0.070	100	101	14.4	-0.037048	424	286	284	343	289	325	832	246	83	60	84	60	72	-0.045	9.27	0.03
66	9.749	10.336	0.15	0.16	1.84	76	-1.16	1.40	75	-1.9	96	0.070	101	101	14.3	-0.052856	423	286	284	342	288	325	835	245	83	60	83	60	72	-0.045	9.28	0.03
67	9.898	10.493	0.15	0.16	1.83	76	-0.91	1.40	75	-1.8	96	0.070	100	101	14.3	-0.067658	423	286	284	342	286	324	833	246	82	60	83	60	72	-0.045	9.27	0.03
68	10.048	10.650	0.15	0.16	1.83	76	-1.38	1.40	75	-1.7	96	0.070	101	101	14.2	-0.051361	422	286	283	341	285	323	838	245	82	60	83	60	73	-0.045	9.32	0.03
69	10.197	10.807	0.15	0.16	1.82	76	-1.11	1.40	75	-1.7	96	0.070	100	101	14.1	-0.077728	422	286	283	340	284	323	838	245	82	60	83	60	73	-0.045	9.38	0.03

Wood Heater Test Data
Low Burn Emissions Data

Run: 2

Manufacturer: Kuma Stoves
Model: Aspen LE
Tracking No.: 2357
Project No.: 0123WM011E
Test Date: 26-Feb-19
Beginning Clock Time: 15:15

Total Sampling Time: 659 min
Recording Interval: 1 min
Background Sample Volume: 97.796 cubic feet

Meter Box Y Factor: 1.009 (1) 0.996 (2) 0.996 (Amb)

Barometric Pressure:	Begin	Middle	End	Average	
	28.47	28.44	28.4	28.44	0

OMNI Equipment Numbers:

PM Control Modules: 371, 372
Dilution Tunnel MW(dry): 29.00 lb/lb-mole
Dilution Tunnel MW(wet): 28.78 lb/lb-mole
Dilution Tunnel H2O: 2.00 percent
Dilution Tunnel Static: -0.110 "H2O
Tunnel Area: 0.19635 ft2
Pitot Tube Cp: 0.99

Avg. Tunnel Velocity: 18.29 ft/sec.
Initial Tunnel Flow: 192.7 scfm
Average Tunnel Flow: 194.5 scfm
Post-Test Leak Check (1): 0.000 cfm @ 9 in. Hg
Post-Test Leak Check (2): 0.000 cfm @ 10 in. Hg
Average Test Piece Fuel Moisture: 20.05 Dry Basis %

Technician Signature:

Velocity Traverse Data	Pt.1	Pt.2	Pt.3	Pt.4	Pt.5	Pt.6	Pt.7	Pt.8	Center	
Initial dP	0.068	0.072	0.072	0.070	0.066	0.068	0.076	0.070	0.070	"H2O
Temp:	96	96	96	96	95	95	95	95	96	°F

V_{strav} 18.47 ft/sec V_{scent} 18.45 ft/sec F_p 1.001

	Particulate Sampling Data														Fuel Weight (lb)		Temperature Data (°F)													Stack Gas Data		
Elapsed Time (min)	Gas Meter 1 (ft^3)	Gas Meter 2 (ft^3)	Sample Rate 1 (cfm)	Sample Rate 2 (cfm)	Orifice dH 1 ("H_2O)	Meter 1 Temp (°F)	Meter 1 Vacuum ("Hg)	Orifice dH 2 ("H_2O)	Meter 2 Temp (°F)	Meter 2 Vacuum ("Hg)	Dilution Tunnel (°F)	Dilution Tunnel Center dP	Pro. Rate 1	Pro. Rate 2	Scale Reading	Weight Change	Firebox Top	Firebox Bottom	Firebox Back	Firebox Left	Firebox Right	Avg. Stove Surface	Catalyst Exit	Stack	Filter 1	Dryer Exit 1	Filter 2	Dryer Exit 2	Ambient	Draft ("H_2O)	CO_2 (%)	CO (%)
70	10.347	10.963	0.15	0.16	1.81	76	-1.12	1.41	75	-1.7	96	0.070	101	100	14.1	-0.067444	422	286	283	339	283	323	841	244	82	60	83	60	73	-0.045	9.42	0.03
71	10.497	11.121	0.15	0.16	1.82	76	-1.16	1.40	75	-2	95	0.070	101	101	14.0	-0.046082	422	286	283	338	282	322	844	245	82	60	83	60	73	-0.045	9.43	0.03
72	10.647	11.278	0.15	0.16	1.84	76	-1.1	1.40	75	-1.8	95	0.070	101	101	13.9	-0.06427	422	286	283	337	281	322	847	244	82	60	83	60	74	-0.045	9.53	0.03
73	10.797	11.435	0.15	0.16	1.81	76	-0.94	1.40	75	-1.7	95	0.070	101	101	13.9	-0.049682	423	287	283	336	280	322	851	244	82	60	83	60	73	-0.045	9.61	0.03
74	10.946	11.593	0.15	0.16	1.84	76	-1.38	1.40	75	-1.8	95	0.070	100	101	13.8	-0.088776	424	287	283	336	279	322	854	243	83	60	83	60	72	-0.045	9.67	0.03
75	11.095	11.750	0.15	0.16	1.83	76	-0.96	1.40	75	-2	94	0.070	100	101	13.8	-0.0513	424	287	283	335	278	321	858	244	83	60	83	60	73	-0.045	9.76	0.03
76	11.245	11.907	0.15	0.16	1.83	76	-1.27	1.41	75	-2	95	0.070	101	101	13.7	-0.048248	425	288	283	334	277	321	861	244	83	60	82	60	73	-0.045	9.79	0.03
77	11.395	12.064	0.15	0.16	1.82	76	-1.38	1.41	76	-2	94	0.070	101	101	13.6	-0.066986	426	288	283	333	276	321	864	245	83	60	82	60	72	-0.045	9.82	0.03
78	11.544	12.221	0.15	0.16	1.83	76	-1.27	1.40	75	-1.9	94	0.070	100	101	13.6	-0.037201	427	289	283	332	275	321	868	245	83	60	82	60	72	-0.045	9.91	0.03
79	11.694	12.378	0.15	0.16	1.81	76	-1.2	1.41	75	-1.8	94	0.070	101	101	13.5	-0.076905	428	289	283	332	274	321	869	245	83	60	82	60	73	-0.045	9.88	0.03
80	11.844	12.535	0.15	0.16	1.82	76	-0.88	1.40	76	-1.7	94	0.070	101	101	13.5	-0.075897	430	290	283	331	273	321	872	246	83	60	82	60	73	-0.045	9.92	0.03
81	11.994	12.693	0.15	0.16	1.82	76	-1.36	1.40	76	-1.7	94	0.070	101	101	13.4	-0.042663	431	291	283	330	273	322	874	246	83	60	82	60	72	-0.045	10.03	0.03
82	12.144	12.850	0.15	0.16	1.82	76	-0.89	1.40	76	-1.8	94	0.070	101	101	13.4	-0.057221	432	291	283	329	272	321	875	247	83	60	82	60	73	-0.045	10	0.03
83	12.293	13.007	0.15	0.16	1.83	76	-0.88	1.41	76	-2	94	0.070	100	101	13.3	-0.084778	433	292	283	329	271	322	879	247	83	60	82	60	72	-0.045	10.06	0.03
84	12.443	13.164	0.15	0.16	1.84	76	-1.15	1.41	76	-2	94	0.070	101	101	13.2	-0.054107	434	293	283	328	270	322	882	246	83	60	81	60	74	-0.045	10.06	0.03
85	12.592	13.321	0.15	0.16	1.83	76	-1.35	1.40	76	-2	93	0.070	100	100	13.2	-0.042359	436	294	283	327	270	322	886	246	83	60	81	59	73	-0.045	10.24	0.03
86	12.742	13.479	0.15	0.16	1.82	76	-1.18	1.41	76	-1.9	93	0.070	101	101	13.1	-0.05307	438	295	283	326	269	322	890	247	82	60	81	60	72	-0.045	10.31	0.03
87	12.892	13.636	0.15	0.16	1.82	76	-0.89	1.40	76	-1.9	93	0.070	101	100	13.1	-0.067016	439	296	283	326	268	322	894	247	82	60	81	59	73	-0.045	10.34	0.03
88	13.042	13.794	0.15	0.16	1.82	76	-0.88	1.41	76	-1.8	93	0.070	101	101	13.0	-0.067475	441	297	283	325	267	323	898	248	82	60	81	59	74	-0.045	10.47	0.03
89	13.192	13.951	0.15	0.16	1.84	76	-0.98	1.41	76	-1.9	93	0.070	101	100	12.9	-0.078522	443	298	283	324	267	323	902	248	82	60	81	59	74	-0.045	10.52	0.03
90	13.342	14.108	0.15	0.16	1.81	76	-1.03	1.40	76	-1.8	93	0.070	101	100	12.9	-0.034057	445	299	283	324	266	323	905	248	82	60	81	59	74	-0.046	10.64	0.03
91	13.491	14.265	0.15	0.16	1.84	76	-1.2	1.41	76	-1.8	93	0.070	100	100	12.8	-0.063233	447	300	283	323	265	324	911	250	82	60	81	59	74	-0.046	10.68	0.03
92	13.640	14.422	0.15	0.16	1.84	76	-1.07	1.40	76	-1.9	93	0.070	100	100	12.7	-0.083435	450	301	283	322	265	324	916	249	82	60	81	59	72	-0.046	10.77	0.03
93	13.790	14.580	0.15	0.16	1.83	76	-0.94	1.41	76	-2	93	0.070	101	101	12.7	-0.049438	452	302	283	322	264	325	922	249	82	60	81	59	73	-0.046	10.82	0.03
94	13.940	14.737	0.15	0.16	1.82	76	-1.01	1.40	76	-1.8	93	0.070	101	100	12.6	-0.057648	455	303	283	321	264	325	927	249	82	60	81	59	74	-0.046	10.96	0.03
95	14.090	14.894	0.15	0.16	1.82	76	-0.88	1.40	76	-1.9	93	0.070	101	100	12.5	-0.081848	458	304	283	321	263	326	933	251	82	60	80	59	73	-0.046	11.13	0.04
96	14.240	15.051	0.15	0.16	1.82	76	-1.32	1.41	76	-1.8	93	0.070	101	100	12.5	-0.045166	461	305	283	320	263	326	940	252	82	60	80	59	72	-0.046	11.22	0.04
97	14.390	15.208	0.15	0.16	1.84	76	-1.16	1.40	76	-2	92	0.070	101	100	12.4	-0.081665	465	306	283	319	262	327	949	253	82	60	80	59	74	-0.047	11.3	0.04
98	14.540	15.366	0.15	0.16	1.81	76	-1.36	1.41	76	-2	92	0.070	101	101	12.4	-0.05072	468	307	283	319	262	328	959	254	82	60	80	59	73	-0.047	11.52	0.04
99	14.689	15.523	0.15	0.16	1.84	76	-0.96	1.40	76	-1.9	92	0.070	100	100	12.3	-0.0448	473	308	283	318	261	329	969	254	82	60	80	59	73	-0.047	11.67	0.05
100	14.838	15.681	0.15	0.16	1.84	76	-1.38	1.40	76	-1.8	92	0.070	100	101	12.2	-0.08844	477	309	283	317	261	329	979	256	82	60	80	59	74	-0.047	11.84	0.05
101	14.989	15.838	0.15	0.16	1.84	76	-1.33	1.40	76	-2	92	0.070	101	100	12.2	-0.058746	482	310	283	317	260	330	988	257	82	60	80	59	73	-0.047	11.97	0.05
102	15.138	15.995	0.15	0.16	1.83	76	-1.32	1.41	76	-1.9	92	0.070	100	100	12.1	-0.09729	487	311	283	316	260	331	998	258	82	60	80	59	73	-0.047	12.21	0.05
103	15.288	16.152	0.15	0.16	1.83	76	-0.95	1.41	76	-1.8	92	0.070	101	100	12.0	-0.039978	493	312	283	316	260	333	1009	260	82	60	80	59	73	-0.048	12.39	0.06
104	15.438	16.310	0.15	0.16	1.82	76	-0.89	1.40	76	-1.8	93	0.070	101	101	12.0	-0.066986	499	314	283	315	260	334	1019	261	82	60	81	59	73	-0.048	12.58	0.06

Wood Heater Test Data
Low Burn Emissions Data

Run: 2

Manufacturer: Kuma Stoves
Model: Aspen LE
Tracking No.: 2357
Project No.: 0123WM011E
Test Date: 26-Feb-19
Beginning Clock Time: 15:15

Total Sampling Time: 659 min
Recording Interval: 1 min
Background Sample Volume: 97.796 cubic feet

Meter Box Y Factor: 1.009 (1) 0.996 (2) 0.996 (Amb)

Barometric Pressure:	Begin	Middle	End	Average	
	28.47	28.44	28.4	28.44	0

OMNI Equipment Numbers:

PM Control Modules: 371, 372
Dilution Tunnel MW(dry): 29.00 lb/lb-mole
Dilution Tunnel MW(wet): 28.78 lb/lb-mole
Dilution Tunnel H2O: 2.00 percent
Dilution Tunnel Static: -0.110 "H2O
Tunnel Area: 0.19635 ft2
Pitot Tube Cp: 0.99

Avg. Tunnel Velocity: 18.29 ft/sec.
Initial Tunnel Flow: 192.7 scfm
Average Tunnel Flow: 194.5 scfm
Post-Test Leak Check (1): 0.000 cfm @ 9 in. Hg
Post-Test Leak Check (2): 0.000 cfm @ 10 in. Hg
Average Test Piece Fuel Moisture: 20.05 Dry Basis %

Technician Signature:

Velocity Traverse Data	Pt.1	Pt.2	Pt.3	Pt.4	Pt.5	Pt.6	Pt.7	Pt.8	Center	
Initial dP	0.068	0.072	0.072	0.070	0.066	0.068	0.076	0.070	0.070	"H2O
Temp:	96	96	96	96	95	95	95	95	96	°F

V_{strav} 18.47 ft/sec V_{scent} 18.45 ft/sec F_p 1.001

	Particulate Sampling Data														Fuel Weight (lb)		Temperature Data (°F)													Stack Gas Data		
Elapsed Time (min)	Gas Meter 1 (ft^3)	Gas Meter 2 (ft^3)	Sample Rate 1 (cfm)	Sample Rate 2 (cfm)	Orifice dH 1 ("H_2O)	Meter 1 Temp (°F)	Meter 1 Vacuum ("Hg)	Orifice dH 2 ("H_2O)	Meter 2 Temp (°F)	Meter 2 Vacuum ("Hg)	Dilution Tunnel (°F)	Dilution Tunnel Center dP	Pro. Rate 1	Pro. Rate 2	Scale Reading	Weight Change	Firebox Top	Firebox Bottom	Firebox Back	Firebox Left	Firebox Right	Avg. Stove Surface	Catalyst Exit	Stack	Filter 1	Dryer Exit 1	Filter 2	Dryer Exit 2	Ambient	Draft ("H_2O)	CO_2 (%)	CO (%)
105	15.588	16.467	0.15	0.16	1.84	76	-1.08	1.41	76	-1.9	92	0.070	101	100	11.9	-0.059205	505	315	283	315	259	335	1042	263	82	60	81	59	72	-0.049	12.73	0.06
106	15.739	16.624	0.15	0.16	1.84	76	-1.23	1.40	76	-2	92	0.070	101	100	11.8	-0.101501	515	316	283	314	259	337	1066	265	82	60	81	59	73	-0.049	13.15	0.06
107	15.888	16.782	0.15	0.16	1.85	76	-1.08	1.41	76	-1.8	92	0.070	100	101	11.7	-0.081024	524	317	283	314	259	339	1078	267	82	60	81	59	73	-0.049	13.65	0.06
108	16.038	16.939	0.15	0.16	1.84	76	-1.02	1.40	76	-1.9	93	0.070	101	100	11.7	-0.060974	533	318	284	314	259	342	1085	269	82	60	81	59	73	-0.049	13.89	0.06
109	16.187	17.095	0.15	0.16	1.83	76	-1.37	1.40	76	-1.8	93	0.070	100	100	11.6	-0.077088	542	319	284	313	258	343	1102	270	82	60	81	59	73	-0.049	14.34	0.06
110	16.337	17.252	0.15	0.16	1.83	76	-1.38	1.40	76	-1.8	93	0.070	101	100	11.5	-0.069915	551	320	284	313	258	345	1106	272	82	60	81	59	74	-0.050	14.61	0.06
111	16.487	17.410	0.15	0.16	1.82	76	-1.08	1.40	76	-2	92	0.070	101	101	11.4	-0.090302	560	321	284	313	258	347	1124	274	82	60	81	59	74	-0.049	15	0.07
112	16.637	17.566	0.15	0.16	1.81	76	-0.88	1.41	76	-2	93	0.070	101	100	11.3	-0.087524	570	322	284	313	259	350	1115	275	85	60	82	59	75	-0.050	15.48	0.11
113	16.787	17.724	0.15	0.16	1.82	76	-0.9	1.39	76	-1.8	93	0.070	101	101	11.3	-0.084076	578	324	284	312	258	351	1103	279	88	60	83	59	75	-0.051	15.79	0.22
114	16.937	17.881	0.15	0.16	1.84	76	-1.07	1.40	76	-1.9	93	0.070	101	100	11.2	-0.094208	584	325	284	312	259	353	1076	281	91	60	83	59	75	-0.052	15.95	0.29
115	17.086	18.037	0.15	0.16	1.84	76	-1.28	1.38	76	-2	94	0.070	100	100	11.1	-0.093079	579	326	284	312	259	352	985	280	93	60	84	59	75	-0.050	15.98	0.4
116	17.235	18.194	0.15	0.16	1.84	76	-0.99	1.40	76	-2	94	0.070	100	101	11.0	-0.083099	574	327	284	313	259	351	968	279	94	60	84	59	75	-0.052	16.08	0.83
117	17.385	18.351	0.15	0.16	1.83	76	-1.34	1.40	76	-1.8	93	0.070	101	100	10.9	-0.084595	572	328	284	313	259	351	966	280	92	60	85	59	75	-0.051	16.08	1.16
118	17.535	18.508	0.15	0.16	1.83	76	-1.31	1.39	76	-2	94	0.070	101	101	10.8	-0.098602	570	329	284	314	260	351	961	279	88	60	85	59	73	-0.050	15.99	1.04
119	17.685	18.665	0.15	0.16	1.82	76	-1.38	1.40	76	-1.9	94	0.070	101	101	10.7	-0.069702	569	330	285	315	261	352	953	278	86	60	85	59	75	-0.050	16.04	0.7
120	17.834	18.821	0.15	0.16	1.82	76	-0.88	1.39	76	-1.9	94	0.070	100	100	10.6	-0.112885	568	330	285	316	262	352	950	275	85	60	85	59	76	-0.051	16.04	0.69
121	17.984	18.978	0.15	0.16	1.81	76	-1.01	1.40	76	-2	94	0.070	101	101	10.5	-0.08728	567	331	285	317	263	353	939	274	86	60	85	59	77	-0.050	15.81	0.55
122	18.134	19.135	0.15	0.16	1.83	76	-1.36	1.39	76	-2	94	0.070	101	101	10.4	-0.093018	566	331	285	318	264	353	929	273	86	60	85	59	75	-0.050	15.37	0.52
123	18.284	19.292	0.15	0.16	1.83	76	-0.92	1.39	76	-2	94	0.070	101	101	10.3	-0.086517	564	332	285	319	265	353	921	270	86	60	85	59	76	-0.049	15.14	0.46
124	18.433	19.448	0.15	0.16	1.84	76	-0.99	1.40	76	-2	94	0.070	100	100	10.3	-0.093262	562	332	285	321	266	353	914	267	86	60	85	59	76	-0.049	14.95	0.5
125	18.582	19.605	0.15	0.16	1.84	76	-0.89	1.40	76	-2	95	0.070	100	101	10.2	-0.062866	561	332	285	322	267	353	904	265	85	60	85	59	77	-0.048	14.48	0.35
126	18.732	19.761	0.15	0.16	1.83	76	-1.37	1.40	76	-1.8	94	0.070	101	100	10.1	-0.063843	559	332	285	324	269	354	908	262	85	60	85	59	77	-0.048	14.06	0.53
127	18.882	19.918	0.15	0.16	1.83	76	-0.96	1.39	76	-1.8	94	0.070	101	101	10.1	-0.063934	558	332	285	325	270	354	911	260	85	60	85	59	77	-0.047	13.82	0.35
128	19.031	20.074	0.15	0.16	1.82	76	-1	1.40	76	-2	94	0.070	100	100	10.0	-0.045959	557	332	285	326	271	354	911	258	85	60	85	59	75	-0.046	13.55	0.24
129	19.181	20.231	0.15	0.16	1.81	76	-1.21	1.39	76	-2	94	0.070	101	101	10.0	-0.064545	556	332	284	328	272	354	908	255	85	60	85	59	75	-0.047	13.16	0.05
130	19.331	20.388	0.15	0.16	1.81	76	-0.99	1.40	76	-1.8	94	0.070	101	101	9.9	-0.068909	554	332	284	329	273	354	907	253	85	60	85	59	77	-0.046	12.62	0.03
131	19.481	20.545	0.15	0.16	1.84	76	-0.94	1.40	76	-1.8	94	0.070	101	101	9.8	-0.048401	552	332	284	330	273	354	911	251	85	60	85	59	76	-0.045	12.05	0.03
132	19.631	20.702	0.15	0.16	1.84	76	-1.36	1.40	76	-1.8	94	0.070	101	101	9.8	-0.05191	554	332	283	331	274	355	958	251	85	60	85	59	74	-0.045	11.51	0.05
133	19.780	20.859	0.15	0.16	1.84	76	-1.37	1.38	76	-2	93	0.070	100	100	9.7	-0.053986	555	333	283	331	274	355	965	251	85	60	85	59	76	-0.045	11.15	0.05
134	19.930	21.015	0.15	0.16	1.84	76	-1.07	1.40	76	-1.8	94	0.070	101	100	9.7	-0.036987	555	333	283	332	274	355	956	249	85	59	85	59	75	-0.045	10.91	0.05
135	20.080	21.172	0.15	0.16	1.84	76	-1	1.40	76	-2	93	0.070	101	100	9.7	-0.044403	553	333	282	332	275	355	947	250	85	59	85	59	76	-0.045	10.7	0.05
136	20.230	21.329	0.15	0.16	1.82	76	-0.88	1.39	75	-1.8	93	0.070	101	101	9.6	-0.053192	550	333	282	332	275	354	939	249	85	59	85	59	77	-0.045	10.64	0.05
137	20.380	21.486	0.15	0.16	1.82	76	-0.89	1.40	75	-2	93	0.070	101	101	9.6	-0.030609	546	333	282	332	275	354	933	248	85	59	85	59	77	-0.045	10.62	0.05
138	20.530	21.643	0.15	0.16	1.81	76	-1.2	1.40	75	-2	93	0.070	101	101	9.5	-0.085083	542	333	282	332	275	353	924	248	85	59	85	59	75	-0.045	10.19	0.04
139	20.680	21.800	0.15	0.16	1.84	76	-1.24	1.40	75	-1.9	93	0.070	101	101	9.5	-0.024262	538	334	281	332	275	352	920	247	85	59	85	59	74	-0.045	10.17	0.04

Wood Heater Test Data
Low Burn Emissions Data

Run: 2

Manufacturer: Kuma Stoves
Model: Aspen LE
Tracking No.: 2357
Project No.: 0123WM011E
Test Date: 26-Feb-19
Beginning Clock Time: 15:15

Total Sampling Time: 659 min
Recording Interval: 1 min
Background Sample Volume: 97.796 cubic feet

Meter Box Y Factor: 1.009 (1) 0.996 (2) 0.996 (Amb)

Barometric Pressure:	Begin	Middle	End	Average	
	28.47	28.44	28.4	28.44	0

OMNI Equipment Numbers:

PM Control Modules: 371, 372
Dilution Tunnel MW(dry): 29.00 lb/lb-mole
Dilution Tunnel MW(wet): 28.78 lb/lb-mole
Dilution Tunnel H2O: 2.00 percent
Dilution Tunnel Static: -0.110 "H2O
Tunnel Area: 0.19635 ft2
Pitot Tube Cp: 0.99

Avg. Tunnel Velocity: 18.29 ft/sec.
Initial Tunnel Flow: 192.7 scfm
Average Tunnel Flow: 194.5 scfm
Post-Test Leak Check (1): 0.000 cfm @ 9 in. Hg
Post-Test Leak Check (2): 0.000 cfm @ 10 in. Hg
Average Test Piece Fuel Moisture: 20.05 Dry Basis %

Technician Signature:

Velocity Traverse Data	Pt.1	Pt.2	Pt.3	Pt.4	Pt.5	Pt.6	Pt.7	Pt.8	Center	
Initial dP	0.068	0.072	0.072	0.070	0.066	0.068	0.076	0.070	0.070	"H2O
Temp:	96	96	96	96	95	95	95	95	96	°F

V_{strav} 18.47 ft/sec V_{scent} 18.45 ft/sec F_p 1.001

	Particulate Sampling Data														Fuel Weight (lb)		Temperature Data (°F)													Stack Gas Data		
Elapsed Time (min)	Gas Meter 1 (ft^3)	Gas Meter 2 (ft^3)	Sample Rate 1 (cfm)	Sample Rate 2 (cfm)	Orifice dH 1 ("H_2O)	Meter 1 Temp (°F)	Meter 1 Vacuum ("Hg)	Orifice dH 2 ("H_2O)	Meter 2 Temp (°F)	Meter 2 Vacuum ("Hg)	Dilution Tunnel (°F)	Dilution Tunnel Center dP	Pro. Rate 1	Pro. Rate 2	Scale Reading	Weight Change	Firebox Top	Firebox Bottom	Firebox Back	Firebox Left	Firebox Right	Avg. Stove Surface	Catalyst Exit	Stack	Filter 1	Dryer Exit 1	Filter 2	Dryer Exit 2	Ambient	Draft ("H_2O)	CO_2 (%)	CO (%)
140	20.830	21.957	0.15	0.16	1.84	76	-1.16	1.39	75	-1.8	93	0.070	101	101	9.4	-0.067993	534	334	281	332	275	351	919	246	85	59	85	59	75	-0.044	10.24	0.04
141	20.978	22.114	0.15	0.16	1.84	76	-1.1	1.39	75	-1.8	93	0.070	99	101	9.4	-0.015289	530	334	281	331	275	350	920	245	85	59	85	59	76	-0.044	10.34	0.04
142	21.128	22.270	0.15	0.16	1.83	76	-1.01	1.40	75	-1.9	93	0.070	101	100	9.3	-0.046479	527	334	281	331	275	350	922	245	85	59	85	59	74	-0.045	10.45	0.04
143	21.278	22.427	0.15	0.16	1.83	76	-1.32	1.40	75	-2	93	0.070	101	101	9.2	-0.082824	524	334	281	331	275	349	924	246	85	59	85	59	75	-0.045	10.5	0.04
144	21.428	22.583	0.15	0.16	1.83	76	-1.11	1.40	75	-2	93	0.070	101	100	9.2	-0.050965	522	334	281	330	274	348	927	246	85	59	85	59	75	-0.044	10.62	0.05
145	21.578	22.740	0.15	0.16	1.82	76	-1.32	1.39	75	-2	93	0.070	101	101	9.1	-0.06723	520	334	280	330	274	348	930	246	85	59	85	59	76	-0.044	10.71	0.05
146	21.728	22.897	0.15	0.16	1.82	76	-1.19	1.39	75	-1.9	93	0.070	101	101	9.1	-0.030426	518	334	280	329	274	347	933	246	85	59	85	59	75	-0.044	10.75	0.05
147	21.877	23.054	0.15	0.16	1.82	76	-1.31	1.39	75	-1.8	92	0.070	100	101	9.1	-0.038422	518	334	280	329	274	347	936	245	85	59	85	59	75	-0.045	10.85	0.05
148	22.027	23.211	0.15	0.16	1.83	76	-1.17	1.40	75	-1.8	92	0.070	101	101	9.0	-0.054992	517	334	280	329	274	347	939	245	85	59	85	59	75	-0.044	10.89	0.05
149	22.176	23.368	0.15	0.16	1.84	76	-1.15	1.39	75	-2	93	0.070	100	101	9.0	-0.040528	516	334	280	328	273	346	939	245	85	59	85	59	75	-0.044	10.94	0.05
150	22.326	23.525	0.15	0.16	1.83	76	-1.37	1.40	75	-1.8	93	0.070	101	101	8.9	-0.044097	515	334	279	328	273	346	936	245	85	59	85	59	74	-0.044	10.89	0.05
151	22.476	23.681	0.15	0.16	1.84	76	-1.37	1.40	75	-1.9	93	0.070	101	100	8.9	-0.062745	513	334	279	328	273	345	932	244	85	59	84	59	75	-0.044	10.78	0.05
152	22.626	23.838	0.15	0.16	1.83	76	-0.9	1.40	75	-1.8	92	0.070	101	101	8.8	-0.028808	512	334	279	327	273	345	929	243	85	59	84	59	75	-0.045	10.8	0.05
153	22.775	23.995	0.15	0.16	1.83	76	-1.02	1.40	75	-1.8	92	0.070	100	101	8.8	-0.043183	510	334	279	327	273	345	923	243	85	59	84	59	75	-0.043	10.71	0.05
154	22.926	24.152	0.15	0.16	1.82	76	-1.32	1.39	75	-1.9	92	0.070	101	101	8.7	-0.056304	507	333	279	327	273	344	905	243	85	59	85	59	75	-0.044	10.69	0.03
155	23.075	24.309	0.15	0.16	1.82	76	-0.9	1.40	75	-2	92	0.070	100	101	8.7	-0.038575	504	333	279	327	272	343	894	241	85	59	85	59	75	-0.043	10.6	0.03
156	23.225	24.466	0.15	0.16	1.83	76	-0.96	1.40	75	-1.9	92	0.070	101	101	8.6	-0.044738	500	333	279	326	272	342	885	241	85	59	85	59	75	-0.043	10.54	0.02
157	23.375	24.623	0.15	0.16	1.84	76	-1.12	1.40	75	-1.8	92	0.070	101	101	8.6	-0.053528	497	333	278	326	272	341	879	239	85	59	85	59	74	-0.043	10.52	0.02
158	23.524	24.779	0.15	0.16	1.85	76	-1.05	1.39	75	-1.8	92	0.070	100	100	8.5	-0.042603	493	333	278	326	272	340	873	238	85	59	84	59	73	-0.042	10.47	0.02
159	23.674	24.936	0.15	0.16	1.84	76	-0.96	1.40	75	-1.8	92	0.070	101	101	8.5	-0.050567	490	333	278	325	272	340	869	237	85	59	84	59	72	-0.043	10.47	0.02
160	23.824	25.092	0.15	0.16	1.83	76	-1.18	1.40	75	-2	91	0.070	100	100	8.5	-0.03006	487	333	278	325	273	339	866	236	85	59	84	59	73	-0.042	10.4	0.02
161	23.973	25.250	0.15	0.16	1.83	76	-1.03	1.39	75	-2	91	0.070	100	101	8.4	-0.048035	483	333	278	325	272	338	862	236	85	59	84	59	74	-0.042	10.3	0.02
162	24.123	25.406	0.15	0.16	1.82	76	-0.91	1.40	75	-2	91	0.070	100	100	8.4	-0.046722	480	334	278	325	272	338	858	234	85	59	84	58	74	-0.042	10.26	0.02
163	24.274	25.564	0.15	0.16	1.83	76	-0.96	1.40	75	-1.8	92	0.070	101	101	8.3	-0.035767	478	334	278	325	272	337	855	234	85	59	84	58	74	-0.042	10.18	0.02
164	24.424	25.721	0.15	0.16	1.83	76	-1.26	1.40	75	-2	91	0.070	100	100	8.3	-0.033813	475	334	278	324	272	337	852	232	84	59	84	58	74	-0.042	10.13	0.02
165	24.573	25.878	0.15	0.16	1.81	76	-1.33	1.40	75	-2	91	0.070	100	100	8.2	-0.06189	472	335	278	324	272	336	848	231	84	59	84	58	74	-0.041	10.04	0.02
166	24.723	26.035	0.15	0.16	1.84	76	-0.98	1.40	75	-1.9	91	0.070	100	100	8.2	-0.035461	469	335	278	324	272	336	844	231	84	59	84	58	72	-0.042	10	0.02
167	24.873	26.191	0.15	0.16	1.84	76	-1.24	1.41	75	-2	91	0.070	100	100	8.2	-0.046692	467	335	278	324	272	335	840	230	84	59	84	58	72	-0.041	9.93	0.02
168	25.022	26.349	0.15	0.16	1.84	76	-0.89	1.40	75	-2	90	0.070	100	101	8.1	-0.022248	464	336	279	324	271	335	834	230	84	59	84	58	73	-0.041	9.82	0.02
169	25.172	26.505	0.15	0.16	1.83	76	-1.19	1.40	75	-2	90	0.070	100	100	8.1	-0.032684	461	336	279	323	271	334	829	229	84	59	84	58	74	-0.041	9.76	0.02
170	25.323	26.663	0.15	0.16	1.82	76	-1.17	1.40	75	-1.8	90	0.070	101	101	8.0	-0.055908	458	336	279	323	271	333	824	227	84	59	83	58	74	-0.041	9.74	0.02
171	25.473	26.820	0.15	0.16	1.84	76	-0.89	1.41	75	-1.8	90	0.070	100	100	8.0	-0.025574	455	337	279	322	271	333	818	226	84	59	83	58	74	-0.041	9.66	0.02
172	25.623	26.977	0.15	0.16	1.84	76	-1.09	1.40	75	-2	90	0.070	100	100	8.0	-0.058746	452	337	279	322	271	332	812	224	84	59	83	58	73	-0.040	9.64	0.02
173	25.773	27.134	0.15	0.16	1.85	76	-1.1	1.40	75	-1.8	90	0.070	100	100	7.9	-0.026215	450	338	279	322	271	332	807	224	84	59	83	58	74	-0.040	9.53	0.02
174	25.922	27.291	0.15	0.16	1.84	76	-1.25	1.41	75	-1.9	90	0.070	100	100	7.9	-0.018463	447	339	280	322	271	332	802	223	84	59	83	58	74	-0.040	9.48	0.02

Wood Heater Test Data
Low Burn Emissions Data

Run: 2

Manufacturer: Kuma Stoves
Model: Aspen LE
Tracking No.: 2357
Project No.: 0123WM011E
Test Date: 26-Feb-19
Beginning Clock Time: 15:15

Total Sampling Time: 659 min
Recording Interval: 1 min
Background Sample Volume: 97.796 cubic feet

Meter Box Y Factor: 1.009 (1) 0.996 (2) 0.996 (Amb)

Barometric Pressure:	Begin	Middle	End	Average	
	28.47	28.44	28.4	28.44	0

OMNI Equipment Numbers:

PM Control Modules: 371, 372
Dilution Tunnel MW(dry): 29.00 lb/lb-mole
Dilution Tunnel MW(wet): 28.78 lb/lb-mole
Dilution Tunnel H2O: 2.00 percent
Dilution Tunnel Static: -0.110 "H2O
Tunnel Area: 0.19635 ft2
Pitot Tube Cp: 0.99

Avg. Tunnel Velocity: 18.29 ft/sec.
Initial Tunnel Flow: 192.7 scfm
Average Tunnel Flow: 194.5 scfm
Post-Test Leak Check (1): 0.000 cfm @ 9 in. Hg
Post-Test Leak Check (2): 0.000 cfm @ 10 in. Hg
Average Test Piece Fuel Moisture: 20.05 Dry Basis %

Technician Signature:

Velocity Traverse Data	Pt.1	Pt.2	Pt.3	Pt.4	Pt.5	Pt.6	Pt.7	Pt.8	Center	
Initial dP	0.068	0.072	0.072	0.070	0.066	0.068	0.076	0.070	0.070	"H2O
Temp:	96	96	96	96	95	95	95	95	96	°F

V_{strav} 18.47 ft/sec V_{scent} 18.45 ft/sec F_p 1.001

	Particulate Sampling Data														Fuel Weight (lb)		Temperature Data (°F)													Stack Gas Data		
Elapsed Time (min)	Gas Meter 1 (ft^3)	Gas Meter 2 (ft^3)	Sample Rate 1 (cfm)	Sample Rate 2 (cfm)	Orifice dH 1 ("H_2O)	Meter 1 Temp (°F)	Meter 1 Vacuum ("Hg)	Orifice dH 2 ("H_2O)	Meter 2 Temp (°F)	Meter 2 Vacuum ("Hg)	Dilution Tunnel (°F)	Dilution Tunnel Center dP	Pro. Rate 1	Pro. Rate 2	Scale Reading	Weight Change	Firebox Top	Firebox Bottom	Firebox Back	Firebox Left	Firebox Right	Avg. Stove Surface	Catalyst Exit	Stack	Filter 1	Dryer Exit 1	Filter 2	Dryer Exit 2	Ambient	Draft ("H_2O)	CO_2 (%)	CO (%)
175	26.072	27.448	0.15	0.16	1.84	76	-1.36	1.40	75	-2	90	0.070	100	100	7.9	-0.035797	444	339	280	322	271	331	797	223	84	59	83	58	74	-0.040	9.49	0.02
176	26.222	27.605	0.15	0.16	1.84	76	-1.32	1.40	75	-1.9	89	0.070	100	100	7.8	-0.046051	441	340	280	321	271	331	794	222	84	59	83	58	73	-0.039	9.39	0.03
177	26.372	27.762	0.15	0.16	1.83	76	-1.35	1.39	75	-2	90	0.070	100	100	7.8	-0.01947	438	340	280	321	271	330	794	221	84	59	83	58	73	-0.040	9.39	0.03
178	26.522	27.919	0.15	0.16	1.82	76	-0.94	1.40	75	-2	89	0.070	100	100	7.8	-0.036927	436	341	280	321	271	330	794	219	84	59	83	58	72	-0.039	9.38	0.03
179	26.672	28.076	0.15	0.16	1.83	76	-0.95	1.40	75	-1.8	90	0.070	100	100	7.7	-0.040924	434	341	280	320	271	329	793	219	84	59	83	58	73	-0.039	9.39	0.03
180	26.822	28.233	0.15	0.16	1.84	76	-1.16	1.40	75	-2	89	0.070	100	100	7.7	-0.048919	432	342	280	320	271	329	791	219	84	59	83	58	73	-0.039	9.46	0.03
181	26.972	28.390	0.15	0.16	1.85	76	-1.3	1.41	75	-1.9	89	0.070	100	100	7.7	-0.028687	430	342	281	320	271	329	790	219	84	59	83	58	72	-0.039	9.46	0.03
182	27.121	28.547	0.15	0.16	1.85	75	-1.27	1.40	75	-1.8	89	0.070	100	100	7.6	-0.013458	428	342	281	319	271	328	789	218	84	59	83	58	73	-0.039	9.52	0.03
183	27.271	28.704	0.15	0.16	1.85	75	-1.18	1.40	75	-1.8	88	0.070	100	100	7.6	-0.044769	426	343	281	319	271	328	790	218	84	59	83	58	72	-0.039	9.55	0.03
184	27.421	28.861	0.15	0.16	1.83	75	-1.25	1.39	75	-2	89	0.070	101	100	7.6	-0.030671	426	343	281	319	271	328	791	217	84	59	83	58	73	-0.038	9.62	0.03
185	27.571	29.018	0.15	0.16	1.83	75	-1.02	1.40	75	-2	88	0.070	100	100	7.5	-0.051666	424	343	281	318	270	327	792	217	83	59	83	58	72	-0.039	9.72	0.04
186	27.721	29.176	0.15	0.16	1.82	75	-0.89	1.40	75	-1.9	88	0.070	100	101	7.5	-0.031372	423	343	281	318	270	327	795	217	83	59	83	58	72	-0.039	9.8	0.04
187	27.871	29.333	0.15	0.16	1.83	75	-0.9	1.40	75	-1.8	89	0.070	101	100	7.4	-0.058166	423	343	280	317	270	327	797	217	83	59	83	58	71	-0.039	9.52	0.04
188	28.021	29.489	0.15	0.16	1.82	75	-0.93	1.41	75	-2	89	0.070	101	100	7.4	-0.02591	423	343	280	317	270	327	801	216	83	59	83	58	71	-0.038	5.14	0.04
189	28.171	29.646	0.15	0.16	1.84	75	-1.16	1.40	75	-1.8	89	0.070	101	100	7.4	-0.026733	423	343	280	317	270	327	805	216	83	59	83	58	73	-0.038	8.64	0.04
190	28.320	29.802	0.15	0.16	1.84	75	-0.96	1.41	75	-2	89	0.070	100	100	7.3	-0.060089	423	343	280	316	270	326	808	218	83	59	83	58	73	-0.039	9.61	0.04
191	28.471	29.960	0.15	0.16	1.84	75	-1.37	1.40	75	-1.8	88	0.070	101	101	7.3	-0.016968	424	344	281	316	270	327	811	217	83	58	83	58	74	-0.039	9.95	0.04
192	28.620	30.117	0.15	0.16	1.84	75	-1.37	1.40	75	-1.9	89	0.070	100	100	7.3	-0.021698	424	343	281	316	269	327	814	218	83	58	83	58	73	-0.039	10.11	0.04
193	28.770	30.274	0.15	0.16	1.83	75	-0.9	1.39	75	-1.8	89	0.070	101	100	7.2	-0.037171	425	343	280	315	269	326	818	218	83	58	82	58	73	-0.039	10.24	0.04
194	28.920	30.431	0.15	0.16	1.82	75	-1.33	1.40	75	-1.8	88	0.070	100	100	7.2	-0.041412	426	344	280	315	270	327	822	219	83	58	82	58	71	-0.039	10.34	0.04
195	29.070	30.588	0.15	0.16	1.84	75	-1.2	1.40	75	-2	89	0.070	101	100	7.1	-0.055389	427	344	280	315	269	327	827	218	83	58	82	58	72	-0.039	10.41	0.04
196	29.221	30.745	0.15	0.16	1.84	75	-1	1.40	75	-1.8	88	0.070	101	100	7.1	-0.030609	428	344	280	315	269	327	833	219	83	58	83	58	73	-0.039	10.48	0.04
197	29.370	30.901	0.15	0.16	1.85	75	-1.09	1.40	75	-2	88	0.070	100	100	7.1	-0.046906	430	344	280	314	270	328	838	219	84	58	83	58	73	-0.039	10.52	0.04
198	29.519	31.058	0.15	0.16	1.84	75	-0.91	1.40	75	-2	88	0.070	100	100	7.0	-0.03302	431	344	280	314	270	328	842	220	84	58	83	58	74	-0.039	10.57	0.04
199	29.669	31.215	0.15	0.16	1.83	75	-1.06	1.40	75	-1.8	88	0.070	100	100	7.0	-0.081696	433	344	280	314	270	328	846	219	84	58	83	58	74	-0.039	10.61	0.04
200	29.819	31.372	0.15	0.16	1.83	75	-1.33	1.39	75	-1.8	88	0.070	100	100	7.0	0.011231	434	344	280	314	270	328	848	220	84	58	83	58	74	-0.039	10.61	0.04
201	29.969	31.529	0.15	0.16	1.83	75	-1.17	1.40	75	-2	88	0.070	100	100	6.9	-0.053742	436	344	280	313	270	329	849	221	84	58	83	58	75	-0.039	10.61	0.04
202	30.119	31.686	0.15	0.16	1.82	75	-0.93	1.38	75	-1.8	88	0.070	100	100	6.9	-0.048797	437	344	280	313	270	329	849	221	84	58	83	58	75	-0.040	10.54	0.04
203	30.269	31.843	0.15	0.16	1.82	75	-1.36	1.40	75	-1.9	88	0.070	100	100	6.8	-0.050018	438	344	280	313	270	329	851	220	84	58	83	58	75	-0.040	10.54	0.04
204	30.419	31.999	0.15	0.16	1.84	75	-1.35	1.39	75	-2	88	0.070	100	100	6.8	-0.02298	440	344	279	313	270	329	854	220	84	58	84	58	75	-0.040	10.5	0.04
205	30.568	32.156	0.15	0.16	1.85	75	-0.88	1.40	75	-1.8	88	0.070	100	100	6.7	-0.053467	441	344	279	313	271	330	857	221	84	58	84	58	74	-0.040	10.55	0.04
206	30.717	32.312	0.15	0.16	1.84	75	-1.18	1.40	74	-2	88	0.070	100	100	6.7	-0.041473	442	344	279	313	271	330	858	222	84	58	84	57	74	-0.040	10.57	0.04
207	30.868	32.469	0.15	0.16	1.83	75	-1.24	1.39	74	-1.9	88	0.070	101	100	6.7	-0.032532	443	344	279	313	271	330	859	221	84	58	84	57	75	-0.040	10.53	0.04
208	31.017	32.626	0.15	0.16	1.83	75	-1.35	1.40	74	-1.8	88	0.070	100	100	6.7	-0.009339	444	344	279	313	271	330	858	223	84	58	84	57	74	-0.040	10.5	0.04
209	31.167	32.783	0.15	0.16	1.83	75	-1.38	1.39	74	-2	88	0.070	100	100	6.6	-0.049499	444	344	279	313	272	330	857	223	84	58	84	57	74	-0.040	10.35	0.04

Wood Heater Test Data
Low Burn Emissions Data

Run: 2

Manufacturer: Kuma Stoves
Model: Aspen LE
Tracking No.: 2357
Project No.: 0123WM011E
Test Date: 26-Feb-19
Beginning Clock Time: 15:15

Total Sampling Time: 659 min
Recording Interval: 1 min
Background Sample Volume: 97.796 cubic feet

Meter Box Y Factor: 1.009 (1) 0.996 (2) 0.996 (Amb)

Barometric Pressure:	Begin	Middle	End	Average	
	28.47	28.44	28.4	28.44	0

OMNI Equipment Numbers:

PM Control Modules: 371, 372
Dilution Tunnel MW(dry): 29.00 lb/lb-mole
Dilution Tunnel MW(wet): 28.78 lb/lb-mole
Dilution Tunnel H2O: 2.00 percent
Dilution Tunnel Static: -0.110 "H2O
Tunnel Area: 0.19635 ft2
Pitot Tube Cp: 0.99

Avg. Tunnel Velocity: 18.29 ft/sec.
Initial Tunnel Flow: 192.7 scfm
Average Tunnel Flow: 194.5 scfm
Post-Test Leak Check (1): 0.000 cfm @ 9 in. Hg
Post-Test Leak Check (2): 0.000 cfm @ 10 in. Hg
Average Test Piece Fuel Moisture: 20.05 Dry Basis %

Technician Signature:

Velocity Traverse Data	Pt.1	Pt.2	Pt.3	Pt.4	Pt.5	Pt.6	Pt.7	Pt.8	Center	
Initial dP	0.068	0.072	0.072	0.070	0.066	0.068	0.076	0.070	0.070	"H2O
Temp:	96	96	96	96	95	95	95	95	96	°F

V_{strav} 18.47 ft/sec V_{scent} 18.45 ft/sec F_p 1.001

	Particulate Sampling Data														Fuel Weight (lb)		Temperature Data (°F)													Stack Gas Data		
Elapsed Time (min)	Gas Meter 1 (ft^3)	Gas Meter 2 (ft^3)	Sample Rate 1 (cfm)	Sample Rate 2 (cfm)	Orifice dH 1 ("H_2O)	Meter 1 Temp (°F)	Meter 1 Vacuum ("Hg)	Orifice dH 2 ("H_2O)	Meter 2 Temp (°F)	Meter 2 Vacuum ("Hg)	Dilution Tunnel (°F)	Dilution Tunnel Center dP	Pro. Rate 1	Pro. Rate 2	Scale Reading	Weight Change	Firebox Top	Firebox Bottom	Firebox Back	Firebox Left	Firebox Right	Avg. Stove Surface	Catalyst Exit	Stack	Filter 1	Dryer Exit 1	Filter 2	Dryer Exit 2	Ambient	Draft ("H_2O)	CO_2 (%)	CO (%)
210	31.317	32.940	0.15	0.16	1.83	75	-1.36	1.40	74	-1.8	88	0.070	100	100	6.5	-0.055328	445	344	279	313	272	331	856	222	84	58	84	57	74	-0.040	10.21	0.04
211	31.467	33.097	0.15	0.16	1.81	75	-1.32	1.39	74	-2	88	0.070	100	100	6.5	-0.039643	445	344	279	313	272	331	855	221	84	58	84	57	76	-0.040	10.22	0.04
212	31.616	33.253	0.15	0.16	1.84	75	-0.89	1.39	74	-2	88	0.070	100	100	6.5	-0.02539	445	344	278	313	272	330	855	222	84	58	84	57	76	-0.040	10.21	0.04
213	31.766	33.410	0.15	0.16	1.84	75	-1.33	1.40	74	-1.9	88	0.070	100	100	6.4	-0.059479	445	344	279	313	273	331	851	222	84	58	84	57	76	-0.040	10.19	0.04
214	31.916	33.566	0.15	0.16	1.84	75	-1.23	1.40	74	-2	88	0.070	100	100	6.4	-0.036133	444	344	278	313	273	330	840	222	84	58	84	57	76	-0.040	9.72	0.04
215	32.065	33.722	0.15	0.16	1.83	75	-1.09	1.40	74	-2	89	0.070	100	100	6.4	-0.033081	443	344	278	313	273	330	832	222	84	58	84	57	76	-0.040	9.53	0.04
216	32.215	33.879	0.15	0.16	1.83	75	-1.37	1.39	74	-1.8	88	0.070	100	100	6.3	-0.028046	442	343	278	313	274	330	827	220	84	58	84	57	75	-0.040	9.43	0.04
217	32.365	34.036	0.15	0.16	1.83	75	-1.34	1.40	74	-1.9	88	0.070	100	100	6.3	-0.042907	440	343	278	313	274	330	822	220	84	58	84	57	76	-0.040	9.37	0.04
218	32.514	34.192	0.15	0.16	1.82	75	-0.94	1.39	74	-1.8	88	0.070	100	100	6.2	-0.059449	439	343	278	313	274	329	816	220	84	58	84	57	74	-0.039	9.31	0.04
219	32.664	34.349	0.15	0.16	1.81	75	-1.26	1.40	74	-1.8	88	0.070	100	100	6.2	0.009339	437	343	278	313	275	329	812	218	84	58	84	57	75	-0.039	9.24	0.04
220	32.814	34.505	0.15	0.16	1.82	75	-0.88	1.39	74	-1.8	88	0.070	100	100	6.2	-0.041779	435	342	278	313	275	329	807	219	84	58	84	57	75	-0.039	9.23	0.04
221	32.964	34.662	0.15	0.16	1.84	75	-1.25	1.39	74	-1.8	88	0.070	100	100	6.2	-0.039123	432	342	278	313	275	328	804	218	84	58	84	57	74	-0.039	9.19	0.04
222	33.113	34.819	0.15	0.16	1.84	75	-0.88	1.39	74	-1.9	88	0.070	100	100	6.1	-0.024506	431	341	277	313	275	327	800	217	85	58	84	57	74	-0.039	9.16	0.04
223	33.262	34.975	0.15	0.16	1.84	75	-1.21	1.39	74	-1.8	88	0.070	100	100	6.1	-0.023193	429	341	277	313	276	327	799	216	84	58	84	57	76	-0.039	9.13	0.04
224	33.412	35.131	0.15	0.16	1.83	75	-1.12	1.39	74	-1.9	87	0.070	100	100	6.1	-0.035767	427	340	277	313	276	327	800	216	84	58	84	57	74	-0.038	9.07	0.04
225	33.562	35.287	0.15	0.16	1.83	75	-1.28	1.39	74	-1.8	88	0.070	100	100	6.0	-0.030212	426	340	277	312	276	326	797	215	85	58	84	57	75	-0.038	9.09	0.04
226	33.711	35.444	0.15	0.16	1.82	75	-1.1	1.40	74	-1.8	88	0.070	100	100	6.0	-0.053467	424	339	277	312	276	326	793	214	84	58	84	57	75	-0.038	9.04	0.03
227	33.861	35.601	0.15	0.16	1.82	75	-1.35	1.39	74	-2	88	0.070	100	100	6.0	-0.029724	422	339	276	312	277	325	788	213	84	58	84	57	75	-0.038	8.98	0.03
228	34.011	35.757	0.15	0.16	1.82	75	-1.21	1.40	74	-1.8	88	0.070	100	100	5.9	-0.017761	420	338	276	312	277	325	784	212	84	58	84	57	74	-0.037	8.97	0.03
229	34.161	35.914	0.15	0.16	1.84	75	-1.28	1.39	74	-1.9	87	0.070	100	100	5.9	-0.058594	418	338	276	312	277	324	781	212	84	58	84	57	74	-0.037	8.99	0.03
230	34.311	36.070	0.15	0.16	1.84	75	-0.9	1.40	74	-1.8	87	0.070	100	100	5.9	0.007355	416	337	276	312	277	324	778	211	84	58	84	57	75	-0.037	8.98	0.03
231	34.460	36.227	0.15	0.16	1.84	75	-1.25	1.39	74	-2	88	0.070	100	100	5.8	-0.06189	414	337	276	312	278	323	774	209	84	58	84	57	75	-0.037	8.95	0.03
232	34.609	36.384	0.15	0.16	1.84	75	-1.36	1.39	74	-2	87	0.070	100	100	5.8	-0.026795	412	336	275	312	278	323	770	208	84	58	84	57	74	-0.037	8.92	0.03
233	34.759	36.540	0.15	0.16	1.84	75	-1.37	1.39	74	-1.9	88	0.070	100	100	5.8	-0.010864	409	336	275	312	277	322	766	208	84	58	84	57	76	-0.036	8.88	0.03
234	34.909	36.697	0.15	0.16	1.83	75	-1.32	1.40	74	-1.8	87	0.070	100	100	5.8	-0.03244	407	336	275	311	278	321	762	206	84	58	84	57	75	-0.036	8.85	0.03
235	35.058	36.853	0.15	0.16	1.83	75	-1.27	1.39	74	-1.9	87	0.070	100	100	5.7	-0.052093	405	335	275	311	278	321	757	206	84	58	83	57	75	-0.036	8.83	0.03
236	35.208	37.009	0.15	0.16	1.82	75	-0.92	1.40	74	-1.9	87	0.070	100	100	5.7	-0.017945	403	335	274	311	279	320	753	205	84	58	83	57	75	-0.035	8.78	0.03
237	35.358	37.165	0.15	0.16	1.81	75	-1.22	1.40	74	-2	87	0.070	100	100	5.7	0.003662	400	335	274	311	279	320	748	204	84	58	84	57	75	-0.035	8.74	0.03
238	35.508	37.322	0.15	0.16	1.84	75	-0.89	1.39	74	-2	87	0.070	100	100	5.6	-0.048034	398	335	274	311	279	319	743	203	84	58	84	57	74	-0.035	8.7	0.03
239	35.658	37.478	0.15	0.16	1.84	75	-0.93	1.39	74	-1.8	87	0.070	100	100	5.6	-0.032288	395	334	274	311	279	319	739	201	84	58	84	57	74	-0.035	8.66	0.03
240	35.807	37.635	0.15	0.16	1.84	75	-1.33	1.39	74	-1.8	86	0.070	100	100	5.6	-0.011291	393	334	274	310	279	318	734	201	84	58	84	57	75	-0.035	8.65	0.03
241	35.957	37.792	0.15	0.16	1.84	75	-0.89	1.40	74	-1.8	86	0.070	100	100	5.6	-0.020081	391	334	274	310	279	318	730	200	84	58	84	57	74	-0.035	8.59	0.03
242	36.106	37.948	0.15	0.16	1.83	75	-1.06	1.39	74	-1.9	86	0.070	100	100	5.6	-0.012116	388	333	274	310	279	317	726	199	84	58	84	57	74	-0.034	8.61	0.03
243	36.256	38.105	0.15	0.16	1.83	75	-0.89	1.40	74	-1.8	86	0.070	100	100	5.5	-0.04544	386	333	274	310	279	316	723	199	84	58	83	57	73	-0.034	8.63	0.03
244	36.405	38.262	0.15	0.16	1.83	75	-1.12	1.38	74	-2	86	0.070	100	100	5.5	-0.006134	384	333	274	310	279	316	718	198	84	58	83	57	74	-0.034	8.53	0.03

Wood Heater Test Data
Low Burn Emissions Data

Run: 2

Manufacturer: Kuma Stoves
Model: Aspen LE
Tracking No.: 2357
Project No.: 0123WM011E
Test Date: 26-Feb-19
Beginning Clock Time: 15:15

Total Sampling Time: 659 min
Recording Interval: 1 min
Background Sample Volume: 97.796 cubic feet

Meter Box Y Factor: 1.009 (1) 0.996 (2) 0.996 (Amb)

Barometric Pressure:	Begin	Middle	End	Average
	28.47	28.44	28.4	28.44 0

OMNI Equipment Numbers:

PM Control Modules: 371, 372
Dilution Tunnel MW(dry): 29.00 lb/lb-mole
Dilution Tunnel MW(wet): 28.78 lb/lb-mole
Dilution Tunnel H2O: 2.00 percent
Dilution Tunnel Static: -0.110 "H2O
Tunnel Area: 0.19635 ft2
Pitot Tube Cp: 0.99

Avg. Tunnel Velocity: 18.29 ft/sec.
Initial Tunnel Flow: 192.7 scfm
Average Tunnel Flow: 194.5 scfm
Post-Test Leak Check (1): 0.000 cfm @ 9 in. Hg
Post-Test Leak Check (2): 0.000 cfm @ 10 in. Hg
Average Test Piece Fuel Moisture: 20.05 Dry Basis %

Technician Signature:

Velocity Traverse Data	Pt.1	Pt.2	Pt.3	Pt.4	Pt.5	Pt.6	Pt.7	Pt.8	Center	
Initial dP	0.068	0.072	0.072	0.070	0.066	0.068	0.076	0.070	0.070	"H2O
Temp:	96	96	96	96	95	95	95	95	96	°F

V_{strav} 18.47 ft/sec V_{scent} 18.45 ft/sec F_p 1.001

	Particulate Sampling Data														Fuel Weight (lb)		Temperature Data (°F)													Stack Gas Data		
Elapsed Time (min)	Gas Meter 1 (ft^3)	Gas Meter 2 (ft^3)	Sample Rate 1 (cfm)	Sample Rate 2 (cfm)	Orifice dH 1 ("H_2O)	Meter 1 Temp (°F)	Meter 1 Vacuum ("Hg)	Orifice dH 2 ("H_2O)	Meter 2 Temp (°F)	Meter 2 Vacuum ("Hg)	Dilution Tunnel (°F)	Dilution Tunnel Center dP	Pro. Rate 1	Pro. Rate 2	Scale Reading	Weight Change	Firebox Top	Firebox Bottom	Firebox Back	Firebox Left	Firebox Right	Avg. Stove Surface	Catalyst Exit	Stack	Filter 1	Dryer Exit 1	Filter 2	Dryer Exit 2	Ambient	Draft ("H_2O)	CO_2 (%)	CO (%)
245	36.555	38.418	0.15	0.16	1.82	75	-1.31	1.40	74	-1.9	86	0.070	100	100	5.5	-0.022705	381	333	274	310	279	315	715	196	84	58	83	57	74	-0.034	8.52	0.03
246	36.705	38.574	0.15	0.16	1.84	75	-0.99	1.40	74	-1.8	87	0.070	100	100	5.5	-0.019745	379	333	274	310	279	315	712	196	84	58	83	57	74	-0.034	8.51	0.03
247	36.856	38.731	0.15	0.16	1.84	75	-0.9	1.39	74	-1.8	86	0.070	101	100	5.4	-0.028565	377	332	274	310	279	314	709	195	84	58	83	57	74	-0.034	8.49	0.03
248	37.005	38.887	0.15	0.16	1.85	75	-1.07	1.40	74	-2	86	0.070	100	100	5.4	-0.018768	375	332	274	310	279	314	708	195	84	58	83	57	75	-0.034	8.48	0.03
249	37.154	39.044	0.15	0.16	1.84	74	-1.36	1.39	74	-1.9	86	0.070	100	100	5.4	-0.033478	373	332	274	309	280	314	706	194	83	58	83	57	74	-0.033	8.42	0.03
250	37.304	39.201	0.15	0.16	1.84	74	-1.32	1.39	74	-2	86	0.070	100	100	5.4	-0.011627	371	332	274	309	279	313	706	193	83	58	83	57	74	-0.033	8.45	0.03
251	37.453	39.357	0.15	0.16	1.84	74	-0.93	1.39	74	-2	86	0.070	100	100	5.3	-0.030273	370	331	274	309	280	313	705	193	83	58	83	57	74	-0.033	8.47	0.03
252	37.603	39.514	0.15	0.16	1.83	74	-1.37	1.40	74	-1.9	86	0.070	100	100	5.3	-0.012024	369	331	274	309	280	313	706	192	83	58	83	56	74	-0.033	8.51	0.03
253	37.754	39.671	0.15	0.16	1.83	74	-1.34	1.38	74	-1.8	86	0.070	101	100	5.3	-0.034912	367	331	274	309	280	312	706	191	83	58	83	57	74	-0.033	8.61	0.03
254	37.903	39.828	0.15	0.16	1.84	74	-1.32	1.40	74	-2	86	0.070	100	100	5.3	-0.005921	366	330	274	309	280	312	707	191	83	58	83	56	74	-0.033	8.55	0.03
255	38.053	39.984	0.15	0.16	1.84	74	-0.92	1.39	74	-1.8	85	0.070	100	99	5.3	-0.0448	365	330	274	309	280	312	705	191	83	58	83	56	73	-0.033	8.34	0.03
256	38.203	40.140	0.15	0.16	1.84	74	-1.34	1.40	74	-2	86	0.070	100	100	5.2	-0.016418	364	330	275	309	280	312	703	190	83	58	82	56	74	-0.033	8.24	0.03
257	38.352	40.297	0.15	0.16	1.84	74	-1.17	1.40	74	-1.8	85	0.070	100	100	5.2	-0.01178	362	329	275	309	280	311	700	190	83	58	82	56	73	-0.033	8.16	0.03
258	38.502	40.454	0.15	0.16	1.84	74	-1.37	1.39	74	-1.8	85	0.070	100	100	5.2	-0.019714	361	329	275	309	280	311	699	190	83	58	82	56	74	-0.032	8.19	0.03
259	38.651	40.611	0.15	0.16	1.84	74	-1.34	1.40	74	-1.9	85	0.070	100	100	5.1	-0.056	360	329	275	310	280	311	698	189	83	57	82	56	73	-0.032	8.22	0.03
260	38.801	40.767	0.15	0.16	1.83	74	-1.28	1.40	74	-2	85	0.070	100	99	5.2	0.005646	359	328	275	310	280	310	698	188	83	58	82	56	73	-0.032	8.24	0.03
261	38.951	40.924	0.15	0.16	1.82	74	-0.98	1.40	74	-1.7	85	0.070	100	100	5.2	-0.00116	357	328	275	310	280	310	698	188	83	58	82	56	73	-0.032	8.26	0.03
262	39.101	41.081	0.15	0.16	1.82	74	-1.11	1.40	74	-2	86	0.070	100	100	5.1	-0.033752	356	328	275	310	280	310	698	187	83	58	82	56	72	-0.032	8.36	0.03
263	39.251	41.238	0.15	0.16	1.84	74	-0.95	1.39	74	-1.9	85	0.070	100	100	5.1	-0.027588	356	328	275	310	280	310	698	188	83	58	82	56	72	-0.032	8.44	0.03
264	39.401	41.394	0.15	0.16	1.85	74	-1.36	1.40	74	-1.8	85	0.070	100	99	5.1	-0.027802	355	327	275	310	280	309	699	188	83	57	83	56	72	-0.032	8.5	0.03
265	39.550	41.551	0.15	0.16	1.85	74	-0.9	1.40	74	-1.9	85	0.070	100	100	5.1	-0.008941	354	327	275	310	280	309	700	188	83	57	83	56	73	-0.032	8.42	0.03
266	39.700	41.707	0.15	0.16	1.84	74	-1.14	1.40	74	-1.8	84	0.070	100	99	5.0	-0.024384	353	327	275	310	280	309	699	187	83	57	83	56	74	-0.032	8.38	0.03
267	39.850	41.864	0.15	0.16	1.84	74	-0.92	1.39	74	-1.9	84	0.070	100	100	5.0	-0.014221	353	327	275	310	281	309	699	187	83	57	83	56	73	-0.032	8.41	0.03
268	40.000	42.020	0.15	0.16	1.83	74	-1.29	1.40	74	-1.9	85	0.070	100	99	5.0	-0.032318	352	326	275	310	280	309	700	187	83	57	83	56	72	-0.032	8.4	0.03
269	40.149	42.177	0.15	0.16	1.83	74	-1.06	1.39	74	-1.8	84	0.070	100	100	5.0	-0.010315	352	326	275	310	280	309	702	187	83	58	83	56	73	-0.032	8.48	0.03
270	40.300	42.334	0.15	0.16	1.82	74	-1.14	1.40	74	-2	84	0.070	101	100	4.9	-0.038849	351	326	275	310	281	309	704	187	83	57	83	56	72	-0.032	8.49	0.03
271	40.450	42.491	0.15	0.16	1.84	74	-1	1.39	74	-2	84	0.070	100	100	4.9	-0.009216	351	326	275	310	281	309	706	187	83	57	83	56	73	-0.032	8.52	0.03
272	40.600	42.648	0.15	0.16	1.83	74	-1.04	1.39	74	-1.8	84	0.070	100	100	4.9	-0.026032	351	325	275	311	281	309	709	187	83	57	83	56	72	-0.032	8.59	0.03
273	40.749	42.804	0.15	0.16	1.85	74	-0.87	1.40	74	-1.8	84	0.070	100	99	4.9	-0.022003	352	325	275	311	281	309	711	186	83	57	83	56	73	-0.032	8.59	0.03
274	40.898	42.961	0.15	0.16	1.83	74	-1.1	1.39	74	-2	84	0.070	100	100	4.9	-0.011566	352	325	275	311	282	309	714	186	83	57	83	56	72	-0.032	8.66	0.03
275	41.048	43.117	0.15	0.16	1.84	74	-1.23	1.40	74	-1.8	84	0.070	100	99	4.8	-0.026459	352	325	275	311	281	309	718	186	83	57	83	56	73	-0.032	8.76	0.03
276	41.198	43.274	0.15	0.16	1.83	74	-1.36	1.39	74	-1.9	84	0.070	100	100	4.8	-0.050293	352	325	275	311	281	309	721	187	83	57	83	56	73	-0.033	8.78	0.03
277	41.348	43.430	0.15	0.16	1.83	74	-0.87	1.40	74	-1.9	84	0.070	100	99	4.8	-0.003296	353	325	275	311	282	309	725	187	83	57	83	56	73	-0.032	8.87	0.04
278	41.498	43.587	0.15	0.16	1.83	74	-1.13	1.39	74	-1.9	84	0.070	100	100	4.8	-0.028412	354	325	275	311	282	309	729	187	82	57	83	56	73	-0.033	8.95	0.04
279	41.648	43.744	0.15	0.16	1.83	74	-1	1.40	74	-1.9	84	0.070	100	100	4.7	-0.017273	355	325	275	311	281	309	734	187	82	57	83	56	73	-0.033	9.03	0.04

Wood Heater Test Data
Low Burn Emissions Data

Run: 2

Manufacturer: Kuma Stoves
Model: Aspen LE
Tracking No.: 2357
Project No.: 0123WM011E
Test Date: 26-Feb-19
Beginning Clock Time: 15:15

Total Sampling Time: 659 min
Recording Interval: 1 min
Background Sample Volume: 97.796 cubic feet

Meter Box Y Factor: 1.009 (1) 0.996 (2) 0.996 (Amb)

Barometric Pressure:	Begin	Middle	End	Average
	28.47	28.44	28.4	28.44 0

OMNI Equipment Numbers:

PM Control Modules: 371, 372
Dilution Tunnel MW(dry): 29.00 lb/lb-mole
Dilution Tunnel MW(wet): 28.78 lb/lb-mole
Dilution Tunnel H2O: 2.00 percent
Dilution Tunnel Static: -0.110 "H2O
Tunnel Area: 0.19635 ft2
Pitot Tube Cp: 0.99

Avg. Tunnel Velocity: 18.29 ft/sec.
Initial Tunnel Flow: 192.7 scfm
Average Tunnel Flow: 194.5 scfm
Post-Test Leak Check (1): 0.000 cfm @ 9 in. Hg
Post-Test Leak Check (2): 0.000 cfm @ 10 in. Hg
Average Test Piece Fuel Moisture: 20.05 Dry Basis %

Technician Signature:

Velocity Traverse Data	Pt.1	Pt.2	Pt.3	Pt.4	Pt.5	Pt.6	Pt.7	Pt.8	Center	
Initial dP	0.068	0.072	0.072	0.070	0.066	0.068	0.076	0.070	0.070	"H2O
Temp:	96	96	96	96	95	95	95	95	96	°F

V_{strav} 18.47 ft/sec V_{scent} 18.45 ft/sec F_p 1.001

	Particulate Sampling Data														Fuel Weight (lb)		Temperature Data (°F)													Stack Gas Data		
Elapsed Time (min)	Gas Meter 1 (ft^3)	Gas Meter 2 (ft^3)	Sample Rate 1 (cfm)	Sample Rate 2 (cfm)	Orifice dH 1 ("H_2O)	Meter 1 Temp (°F)	Meter 1 Vacuum ("Hg)	Orifice dH 2 ("H_2O)	Meter 2 Temp (°F)	Meter 2 Vacuum ("Hg)	Dilution Tunnel (°F)	Dilution Tunnel Center dP	Pro. Rate 1	Pro. Rate 2	Scale Reading	Weight Change	Firebox Top	Firebox Bottom	Firebox Back	Firebox Left	Firebox Right	Avg. Stove Surface	Catalyst Exit	Stack	Filter 1	Dryer Exit 1	Filter 2	Dryer Exit 2	Ambient	Draft ("H_2O)	CO_2 (%)	CO (%)
280	41.798	43.901	0.15	0.16	1.84	74	-1.34	1.39	74	-1.9	83	0.070	100	100	4.7	-0.025299	356	325	275	311	282	310	738	187	82	57	83	56	73	-0.033	9.03	0.04
281	41.947	44.058	0.15	0.16	1.85	74	-1.1	1.40	74	-1.8	84	0.070	100	100	4.7	-0.017303	357	325	275	311	281	310	742	189	82	57	83	56	72	-0.033	9.13	0.04
282	42.097	44.214	0.15	0.16	1.85	74	-1.36	1.39	74	-2	84	0.070	100	99	4.7	-0.025421	358	325	275	312	282	310	746	189	82	57	83	56	73	-0.033	9.15	0.04
283	42.247	44.371	0.15	0.16	1.85	74	-0.94	1.40	74	-1.9	84	0.070	100	100	4.6	-0.05774	359	325	275	312	282	311	751	189	82	57	82	56	72	-0.033	9.27	0.04
284	42.397	44.527	0.15	0.16	1.83	74	-0.88	1.40	73	-1.8	84	0.070	100	100	4.6	-0.013122	361	325	275	312	282	311	757	189	82	57	83	56	70	-0.033	9.31	0.04
285	42.546	44.683	0.15	0.16	1.83	74	-1.36	1.39	74	-1.9	84	0.070	100	99	4.6	-0.024414	363	325	275	312	282	311	762	190	82	57	83	56	70	-0.033	9.4	0.04
286	42.697	44.840	0.15	0.16	1.82	74	-0.87	1.39	73	-2	84	0.070	101	100	4.6	-0.023407	364	325	275	312	283	312	767	190	82	57	83	56	72	-0.033	9.49	0.04
287	42.846	44.997	0.15	0.16	1.83	74	-1.27	1.39	73	-1.9	84	0.070	100	100	4.5	-0.037934	366	325	275	312	283	312	774	191	82	57	83	56	72	-0.033	9.57	0.04
288	42.996	45.153	0.15	0.16	1.83	74	-1.02	1.40	73	-1.9	83	0.070	100	99	4.5	-0.028869	368	325	275	312	283	313	781	193	82	57	83	56	71	-0.034	9.68	0.04
289	43.146	45.310	0.15	0.16	1.82	74	-1.3	1.39	73	-2	83	0.070	100	100	4.5	-0.026062	370	325	275	312	283	313	786	193	82	57	82	56	71	-0.034	9.72	0.04
290	43.295	45.466	0.15	0.16	1.84	74	-1.28	1.40	73	-1.9	83	0.070	99	99	4.4	-0.03537	373	325	275	313	283	314	792	194	82	57	82	56	71	-0.034	9.81	0.04
291	43.445	45.623	0.15	0.16	1.85	74	-1.34	1.39	73	-1.9	83	0.070	100	100	4.4	-0.004913	376	325	275	313	284	315	800	195	82	57	82	56	72	-0.035	9.88	0.04
292	43.594	45.780	0.15	0.16	1.83	74	-1.04	1.39	73	-1.9	84	0.070	100	100	4.4	-0.051453	378	325	275	313	284	315	809	196	82	57	82	56	72	-0.035	9.98	0.04
293	43.744	45.936	0.15	0.16	1.82	74	-0.95	1.39	73	-2	83	0.070	100	99	4.3	-0.037537	382	325	275	313	285	316	818	196	82	57	82	56	69	-0.035	10.09	0.05
294	43.894	46.092	0.15	0.16	1.82	74	-1.34	1.39	73	-2	83	0.070	100	99	4.3	-0.016723	385	325	275	313	285	317	822	197	83	57	83	56	70	-0.035	10.04	0.04
295	44.044	46.248	0.15	0.16	1.83	74	-0.98	1.39	73	-1.8	84	0.070	100	100	4.3	-0.021088	388	325	275	313	285	317	827	197	83	57	83	56	70	-0.035	10.07	0.05
296	44.193	46.404	0.15	0.16	1.82	74	-1.34	1.39	73	-1.8	83	0.070	99	99	4.2	-0.053436	391	326	275	314	285	318	833	199	84	57	83	56	71	-0.036	10.1	0.04
297	44.343	46.561	0.15	0.16	1.83	74	-1.25	1.39	73	-1.9	84	0.070	100	100	4.2	-0.028626	393	326	275	314	286	319	837	200	84	57	84	56	71	-0.036	10.09	0.04
298	44.492	46.717	0.15	0.16	1.84	74	-1.34	1.38	73	-1.8	84	0.070	100	100	4.2	-0.017151	396	326	275	314	286	319	839	200	84	57	84	56	71	-0.036	10.08	0.04
299	44.641	46.873	0.15	0.16	1.83	74	-1.29	1.39	73	-1.8	84	0.070	100	100	4.2	-0.017272	399	326	274	314	287	320	840	201	84	57	84	56	70	-0.036	10.06	0.04
300	44.791	47.030	0.15	0.16	1.83	74	-1.2	1.38	73	-2	84	0.070	100	100	4.1	-0.037415	401	327	274	315	287	321	840	202	84	57	84	56	70	-0.036	10	0.04
301	44.941	47.186	0.15	0.16	1.83	74	-1.06	1.39	73	-1.8	83	0.070	100	99	4.1	-0.020355	402	327	274	315	287	321	837	201	85	57	84	56	70	-0.036	9.88	0.04
302	45.090	47.343	0.15	0.16	1.83	74	-0.94	1.39	73	-2	84	0.070	100	100	4.1	-0.05072	404	327	274	315	288	322	833	202	84	57	84	56	70	-0.036	9.8	0.04
303	45.240	47.499	0.15	0.16	1.82	74	-1.33	1.40	73	-2	84	0.070	100	100	4.0	-0.028656	404	327	274	315	289	322	831	202	84	57	84	56	70	-0.036	9.79	0.04
304	45.390	47.655	0.15	0.16	1.81	74	-1.32	1.38	73	-1.8	84	0.070	100	100	4.0	-0.023896	406	327	274	315	289	322	831	201	84	57	84	56	70	-0.036	9.75	0.04
305	45.539	47.812	0.15	0.16	1.85	74	-1.14	1.39	73	-2	84	0.070	100	100	4.0	-0.046356	406	328	274	316	289	323	828	202	84	57	84	56	70	-0.036	9.67	0.04
306	45.689	47.968	0.15	0.16	1.84	74	-1.02	1.39	73	-1.7	84	0.070	100	100	4.0	0.000336	407	328	274	316	290	323	824	202	85	57	84	56	72	-0.036	9.64	0.04
307	45.838	48.124	0.15	0.16	1.84	74	-1.24	1.39	73	-2	84	0.070	100	100	3.9	-0.048859	407	328	274	316	290	323	821	201	85	57	84	56	70	-0.036	9.58	0.04
308	45.987	48.280	0.15	0.16	1.84	74	-0.93	1.39	73	-2	84	0.070	100	100	3.9	-0.032104	407	328	274	316	291	323	818	202	85	57	84	56	71	-0.036	9.55	0.04
309	46.137	48.436	0.15	0.16	1.84	74	-1.27	1.39	73	-1.9	85	0.070	100	100	3.9	-0.004914	406	328	274	317	291	323	813	201	85	57	84	56	71	-0.036	9.46	0.04
310	46.287	48.592	0.15	0.16	1.83	74	-1.34	1.39	73	-1.8	84	0.070	100	100	3.8	-0.036987	406	328	274	317	292	323	808	201	85	57	84	56	72	-0.036	9.35	0.04
311	46.436	48.748	0.15	0.16	1.83	74	-1.35	1.38	73	-2	84	0.070	100	100	3.8	-0.046722	405	328	274	317	293	323	802	200	85	57	84	56	71	-0.035	9.22	0.04
312	46.586	48.904	0.15	0.16	1.82	74	-0.92	1.39	73	-2	85	0.070	100	100	3.8	-0.01355	404	329	273	317	293	323	796	201	85	57	84	56	70	-0.035	9.04	0.04
313	46.735	49.061	0.15	0.16	1.82	74	-1.28	1.38	73	-1.8	84	0.070	100	100	3.8	-0.0094	402	329	273	317	294	323	790	200	85	57	84	56	70	-0.035	9	0.04
314	46.885	49.217	0.15	0.16	1.84	73	-1.26	1.39	73	-1.8	84	0.070	100	100	3.8	-0.021698	400	328	273	318	295	323	784	199	85	57	84	56	71	-0.035	8.88	0.03

Wood Heater Test Data
Low Burn Emissions Data

Run: 2

Manufacturer: Kuma Stoves
Model: Aspen LE
Tracking No.: 2357
Project No.: 0123WM011E
Test Date: 26-Feb-19
Beginning Clock Time: 15:15

Total Sampling Time: 659 min
Recording Interval: 1 min
Background Sample Volume: 97.796 cubic feet

Meter Box Y Factor: 1.009 (1) 0.996 (2) 0.996 (Amb)

Barometric Pressure:	Begin	Middle	End	Average	
	28.47	28.44	28.4	28.44	0

OMNI Equipment Numbers:

PM Control Modules: 371, 372
Dilution Tunnel MW(dry): 29.00 lb/lb-mole
Dilution Tunnel MW(wet): 28.78 lb/lb-mole
Dilution Tunnel H2O: 2.00 percent
Dilution Tunnel Static: -0.110 "H2O
Tunnel Area: 0.19635 ft2
Pitot Tube Cp: 0.99

Avg. Tunnel Velocity: 18.29 ft/sec.
Initial Tunnel Flow: 192.7 scfm
Average Tunnel Flow: 194.5 scfm
Post-Test Leak Check (1): 0.000 cfm @ 9 in. Hg
Post-Test Leak Check (2): 0.000 cfm @ 10 in. Hg
Average Test Piece Fuel Moisture: 20.05 Dry Basis %

Technician Signature:

Velocity Traverse Data	Pt.1	Pt.2	Pt.3	Pt.4	Pt.5	Pt.6	Pt.7	Pt.8	Center	
Initial dP	0.068	0.072	0.072	0.070	0.066	0.068	0.076	0.070	0.070	"H2O
Temp:	96	96	96	96	95	95	95	95	96	°F

V_{strav} 18.47 ft/sec V_{scent} 18.45 ft/sec F_p 1.001

	Particulate Sampling Data														Fuel Weight (lb)		Temperature Data (°F)													Stack Gas Data		
Elapsed Time (min)	Gas Meter 1 (ft^3)	Gas Meter 2 (ft^3)	Sample Rate 1 (cfm)	Sample Rate 2 (cfm)	Orifice dH 1 ("H_2O)	Meter 1 Temp (°F)	Meter 1 Vacuum ("Hg)	Orifice dH 2 ("H_2O)	Meter 2 Temp (°F)	Meter 2 Vacuum ("Hg)	Dilution Tunnel (°F)	Dilution Tunnel Center dP	Pro. Rate 1	Pro. Rate 2	Scale Reading	Weight Change	Firebox Top	Firebox Bottom	Firebox Back	Firebox Left	Firebox Right	Avg. Stove Surface	Catalyst Exit	Stack	Filter 1	Dryer Exit 1	Filter 2	Dryer Exit 2	Ambient	Draft ("H_2O)	CO_2 (%)	CO (%)
315	47.035	49.373	0.15	0.16	1.82	73	-1.36	1.38	73	-2	84	0.070	100	100	3.7	-0.0354	398	328	273	318	296	323	778	197	85	57	84	56	71	-0.035	8.81	0.03
316	47.184	49.529	0.15	0.16	1.84	73	-1.06	1.39	73	-1.9	84	0.070	100	100	3.7	-0.011993	397	328	273	318	296	322	772	198	85	57	84	56	71	-0.035	8.75	0.03
317	47.333	49.685	0.15	0.16	1.84	73	-0.88	1.38	73	-1.8	84	0.070	100	100	3.7	-0.032074	394	328	274	319	297	322	764	196	85	57	84	56	72	-0.035	8.6	0.03
318	47.482	49.841	0.15	0.16	1.84	73	-0.97	1.39	73	-1.8	84	0.070	100	100	3.6	-0.024781	392	328	273	319	298	322	758	196	85	57	84	56	73	-0.034	8.55	0.03
319	47.632	49.998	0.15	0.16	1.82	73	-0.96	1.38	73	-1.9	84	0.070	100	100	3.6	-0.036071	390	328	273	319	298	322	753	194	85	57	84	56	72	-0.034	8.38	0.03
320	47.781	50.154	0.15	0.16	1.82	73	-1.18	1.39	73	-2	84	0.070	100	100	3.6	-0.002747	388	328	273	319	298	321	747	193	85	57	84	56	72	-0.034	8.15	0.03
321	47.931	50.310	0.15	0.16	1.82	73	-1.36	1.39	73	-2	84	0.070	100	100	3.6	-0.026123	385	328	273	319	299	321	740	193	85	57	84	56	73	-0.034	8.03	0.03
322	48.081	50.466	0.15	0.16	1.82	73	-0.94	1.39	73	-2	83	0.070	100	99	3.6	0.010254	382	328	273	319	299	320	733	192	85	57	84	56	71	-0.034	7.94	0.03
323	48.230	50.622	0.15	0.16	1.84	73	-1.36	1.39	73	-1.9	84	0.070	100	100	3.6	-0.023529	380	327	273	319	300	320	725	192	85	57	84	56	71	-0.033	7.89	0.03
324	48.380	50.778	0.15	0.16	1.83	73	-1.35	1.39	73	-1.9	84	0.070	100	100	3.5	-0.029114	377	327	273	319	300	319	717	191	85	57	84	56	72	-0.033	7.84	0.03
325	48.529	50.934	0.15	0.16	1.84	73	-1.36	1.39	73	-1.9	84	0.070	100	100	3.5	-0.017944	374	327	273	319	301	319	710	189	85	57	84	56	71	-0.033	7.77	0.03
326	48.678	51.090	0.15	0.16	1.84	73	-1.06	1.39	73	-1.8	84	0.070	100	100	3.5	-0.031281	371	326	273	319	302	318	703	187	85	57	84	56	71	-0.032	7.68	0.03
327	48.828	51.246	0.15	0.16	1.83	73	-0.92	1.39	73	-1.9	84	0.070	100	100	3.5	-0.00061	367	326	273	319	302	317	696	187	85	57	84	56	71	-0.032	7.66	0.03
328	48.978	51.402	0.15	0.16	1.83	73	-1.24	1.39	73	-2	84	0.070	100	100	3.5	-0.013977	365	325	273	320	303	317	690	186	85	57	84	56	70	-0.032	7.72	0.03
329	49.127	51.558	0.15	0.16	1.83	73	-1.03	1.39	73	-1.8	83	0.070	100	99	3.4	-0.03183	362	324	273	320	303	316	685	185	85	57	84	56	71	-0.032	7.67	0.03
330	49.277	51.715	0.15	0.16	1.82	73	-0.96	1.38	73	-2	83	0.070	100	100	3.4	-0.024994	359	324	273	320	304	316	679	184	85	57	84	56	71	-0.031	7.6	0.03
331	49.427	51.871	0.15	0.16	1.82	73	-1.32	1.39	73	-1.9	83	0.070	100	99	3.4	0.003906	356	323	273	320	305	315	673	183	84	57	84	56	71	-0.031	7.54	0.03
332	49.576	52.027	0.15	0.16	1.84	73	-1.19	1.38	73	-1.8	83	0.070	100	99	3.4	-0.018066	353	322	273	320	305	315	668	182	84	57	84	56	71	-0.031	7.49	0.03
333	49.726	52.183	0.15	0.16	1.83	73	-0.98	1.39	73	-1.8	83	0.070	100	99	3.4	-0.022614	350	322	273	320	306	314	662	181	84	57	84	56	71	-0.031	7.42	0.03
334	49.875	52.340	0.15	0.16	1.85	73	-0.94	1.39	73	-1.9	83	0.070	100	100	3.4	-0.004669	348	321	273	320	306	314	658	180	84	57	84	56	70	-0.030	7.44	0.03
335	50.025	52.496	0.15	0.16	1.84	73	-1.36	1.39	73	-2	83	0.070	100	99	3.3	-0.051208	345	320	273	320	306	313	654	178	84	57	84	56	72	-0.030	7.45	0.03
336	50.174	52.653	0.15	0.16	1.84	73	-1.35	1.38	73	-2	83	0.070	100	100	3.3	-0.002411	343	320	273	320	307	313	650	177	84	57	84	56	72	-0.030	7.44	0.03
337	50.324	52.809	0.15	0.16	1.83	73	-1.12	1.39	73	-2	83	0.070	100	99	3.3	0.004791	340	319	273	320	307	312	647	177	84	57	84	56	70	-0.030	7.42	0.03
338	50.473	52.965	0.15	0.16	1.83	73	-0.87	1.40	73	-1.8	83	0.070	100	99	3.3	-0.003662	338	318	273	320	307	311	644	176	84	57	84	56	70	-0.030	7.39	0.03
339	50.623	53.121	0.15	0.16	1.82	73	-1.09	1.39	73	-2	82	0.070	100	99	3.3	-0.017456	336	318	273	320	307	311	642	176	84	57	83	56	71	-0.030	7.41	0.03
340	50.773	53.277	0.15	0.16	1.83	73	-0.88	1.39	73	-1.9	83	0.070	100	99	3.3	-0.008148	334	317	272	320	308	310	640	175	84	57	83	56	70	-0.030	7.41	0.03
341	50.923	53.433	0.15	0.16	1.84	73	-1.11	1.39	73	-2	82	0.070	100	99	3.3	-0.035889	332	316	272	321	307	310	637	174	84	57	83	56	70	-0.030	7.36	0.03
342	51.072	53.589	0.15	0.16	1.82	73	-0.94	1.39	73	-2	82	0.070	100	99	3.3	-0.001617	330	316	272	321	308	309	636	174	84	57	83	56	69	-0.029	7.32	0.04
343	51.221	53.746	0.15	0.16	1.84	73	-1.34	1.38	73	-1.8	83	0.070	100	100	3.2	-0.021759	328	315	272	321	308	309	633	173	84	57	83	56	70	-0.029	7.33	0.04
344	51.371	53.902	0.15	0.16	1.84	73	-0.89	1.39	73	-2	82	0.070	100	99	3.2	0.004302	327	314	272	321	308	308	630	173	84	57	83	56	69	-0.029	7.27	0.03
345	51.521	54.058	0.15	0.16	1.84	73	-0.94	1.38	73	-1.8	82	0.070	100	99	3.2	-0.024047	325	313	272	321	308	308	628	172	84	57	83	56	70	-0.029	7.24	0.03
346	51.670	54.214	0.15	0.16	1.83	73	-0.87	1.39	73	-2	82	0.070	100	99	3.2	0.00412	323	312	272	321	309	307	625	172	84	57	83	56	69	-0.029	7.27	0.03
347	51.820	54.371	0.15	0.16	1.82	73	-1.16	1.39	73	-2	82	0.070	100	100	3.2	-0.022187	321	311	272	321	309	307	623	172	84	57	83	56	70	-0.029	7.26	0.03
348	51.970	54.527	0.15	0.16	1.82	73	-1.32	1.39	73	-2	82	0.070	100	99	3.2	0.000946	320	311	272	321	309	307	621	171	84	57	83	56	69	-0.029	7.27	0.04
349	52.120	54.684	0.15	0.16	1.83	73	-1.17	1.39	73	-1.8	82	0.070	100	100	3.2	-0.039215	318	310	272	321	309	306	621	170	84	57	83	55	69	-0.028	7.31	0.04

Wood Heater Test Data
Low Burn Emissions Data

Run: 2

Manufacturer: Kuma Stoves
Model: Aspen LE
Tracking No.: 2357
Project No.: 0123WM011E
Test Date: 26-Feb-19
Beginning Clock Time: 15:15

Total Sampling Time: 659 min
Recording Interval: 1 min
Background Sample Volume: 97.796 cubic feet

Meter Box Y Factor: 1.009 (1) 0.996 (2) 0.996 (Amb)

Barometric Pressure:	Begin	Middle	End	Average	
	28.47	28.44	28.4	28.44	0

OMNI Equipment Numbers:

PM Control Modules: 371, 372
Dilution Tunnel MW(dry): 29.00 lb/lb-mole
Dilution Tunnel MW(wet): 28.78 lb/lb-mole
Dilution Tunnel H2O: 2.00 percent
Dilution Tunnel Static: -0.110 "H2O
Tunnel Area: 0.19635 ft2
Pitot Tube Cp: 0.99

Avg. Tunnel Velocity: 18.29 ft/sec.
Initial Tunnel Flow: 192.7 scfm
Average Tunnel Flow: 194.5 scfm
Post-Test Leak Check (1): 0.000 cfm @ 9 in. Hg
Post-Test Leak Check (2): 0.000 cfm @ 10 in. Hg
Average Test Piece Fuel Moisture: 20.05 Dry Basis %

Technician Signature:

Velocity Traverse Data	Pt.1	Pt.2	Pt.3	Pt.4	Pt.5	Pt.6	Pt.7	Pt.8	Center	
Initial dP	0.068	0.072	0.072	0.070	0.066	0.068	0.076	0.070	0.070	"H2O
Temp:	96	96	96	96	95	95	95	95	96	°F

V_{strav} 18.47 ft/sec V_{scent} 18.45 ft/sec F_p 1.001

	Particulate Sampling Data														Fuel Weight (lb)		Temperature Data (°F)													Stack Gas Data		
Elapsed Time (min)	Gas Meter 1 (ft^3)	Gas Meter 2 (ft^3)	Sample Rate 1 (cfm)	Sample Rate 2 (cfm)	Orifice dH 1 ("H_2O)	Meter 1 Temp (°F)	Meter 1 Vacuum ("Hg)	Orifice dH 2 ("H_2O)	Meter 2 Temp (°F)	Meter 2 Vacuum ("Hg)	Dilution Tunnel (°F)	Dilution Tunnel Center dP	Pro. Rate 1	Pro. Rate 2	Scale Reading	Weight Change	Firebox Top	Firebox Bottom	Firebox Back	Firebox Left	Firebox Right	Avg. Stove Surface	Catalyst Exit	Stack	Filter 1	Dryer Exit 1	Filter 2	Dryer Exit 2	Ambient	Draft ("H_2O)	CO_2 (%)	CO (%)
350	52.270	54.840	0.15	0.16	1.83	73	-1.15	1.39	73	-1.8	81	0.070	100	99	3.2	-0.001068	317	309	272	321	309	306	623	170	84	57	83	55	70	-0.029	7.38	0.04
351	52.419	54.996	0.15	0.16	1.82	73	-1.25	1.39	73	-2	81	0.070	99	99	3.2	-0.000793	316	309	272	322	309	306	626	170	84	57	83	55	70	-0.028	7.46	0.04
352	52.568	55.153	0.15	0.16	1.85	73	-1.33	1.39	73	-1.8	81	0.070	99	100	3.1	-0.036164	315	308	272	322	310	305	627	168	84	57	83	55	69	-0.028	7.48	0.04
353	52.718	55.308	0.15	0.16	1.84	73	-0.89	1.39	73	-1.8	82	0.070	100	99	3.1	-0.013733	314	307	272	322	310	305	627	169	84	57	83	55	69	-0.028	7.49	0.04
354	52.867	55.465	0.15	0.16	1.83	73	-1.31	1.39	73	-1.8	82	0.070	100	100	3.1	0.003022	313	306	272	322	310	305	627	167	83	57	83	55	69	-0.028	7.54	0.04
355	53.017	55.621	0.15	0.16	1.83	73	-1.13	1.39	73	-1.7	81	0.070	100	99	3.1	0.000946	313	305	271	322	310	304	626	168	83	57	83	55	69	-0.028	7.54	0.04
356	53.167	55.777	0.15	0.16	1.83	73	-1.25	1.38	73	-1.8	81	0.070	100	99	3.1	-0.029847	312	304	271	322	311	304	625	168	83	57	83	55	70	-0.028	7.56	0.04
357	53.317	55.933	0.15	0.16	1.83	73	-1	1.39	73	-2	80	0.070	100	99	3.1	-0.032379	311	303	271	322	311	304	624	168	84	57	83	55	69	-0.027	7.56	0.04
358	53.466	56.090	0.15	0.16	1.83	73	-1.31	1.38	73	-2	81	0.070	99	100	3.0	-0.008514	311	302	271	322	311	303	623	167	83	57	83	55	69	-0.026	7.52	0.04
359	53.616	56.246	0.15	0.16	1.84	73	-0.93	1.39	73	-2	80	0.070	100	99	3.0	-0.010986	310	302	271	322	312	303	621	166	83	57	83	55	70	-0.027	7.52	0.04
360	53.765	56.403	0.15	0.16	1.85	73	-1.14	1.39	73	-1.9	80	0.070	99	100	3.0	0.001342	309	301	271	323	312	303	620	166	83	57	83	55	69	-0.027	7.5	0.04
361	53.914	56.559	0.15	0.16	1.84	73	-0.88	1.40	73	-2	80	0.070	99	99	3.0	-0.007721	308	300	271	323	313	303	618	166	83	57	83	55	70	-0.027	7.48	0.04
362	54.064	56.715	0.15	0.16	1.83	73	-1.36	1.39	73	-1.8	80	0.070	100	99	3.0	-0.001861	307	299	271	323	313	303	617	166	83	57	83	55	69	-0.027	7.49	0.04
363	54.214	56.872	0.15	0.16	1.83	73	-1.26	1.39	73	-1.9	80	0.070	100	100	3.0	-0.04834	307	298	270	323	313	302	615	165	83	57	83	55	69	-0.027	7.44	0.04
364	54.363	57.028	0.15	0.16	1.83	73	-0.9	1.39	73	-1.8	80	0.070	99	99	3.0	0.008606	306	297	270	323	314	302	615	165	83	57	83	55	68	-0.027	7.47	0.04
365	54.513	57.184	0.15	0.16	1.83	73	-1.03	1.39	73	-2	80	0.070	100	99	3.0	-0.02478	305	297	270	323	314	302	617	165	83	57	83	55	69	-0.027	7.66	0.04
366	54.663	57.340	0.15	0.16	1.82	73	-1.33	1.39	73	-1.8	80	0.070	100	99	3.0	0.00061	305	296	270	324	315	302	615	164	83	57	83	55	69	-0.027	7.86	0.04
367	54.813	57.497	0.15	0.16	1.84	73	-1.29	1.39	73	-1.9	80	0.070	100	100	3.0	0.001007	304	295	270	324	315	302	610	164	83	57	83	55	71	-0.027	7.8	0.03
368	54.963	57.653	0.15	0.16	1.84	73	-0.87	1.40	73	-1.9	80	0.070	100	99	2.9	-0.031647	303	295	270	324	316	302	606	164	83	57	83	55	71	-0.027	7.68	0.03
369	55.111	57.809	0.15	0.16	1.85	73	-0.95	1.38	73	-1.8	80	0.070	99	99	2.9	-0.024841	302	294	270	324	316	301	605	164	83	57	83	55	71	-0.027	7.54	0.03
370	55.261	57.966	0.15	0.16	1.84	73	-1.34	1.39	73	-2	80	0.070	100	100	2.9	0.002533	302	293	270	325	317	301	604	164	83	56	83	55	69	-0.027	7.49	0.04
371	55.411	58.122	0.15	0.16	1.84	73	-1.35	1.39	72	-2	80	0.070	100	99	2.9	-0.016998	301	292	269	325	318	301	604	162	83	56	83	55	68	-0.026	7.51	0.04
372	55.560	58.278	0.15	0.16	1.84	73	-1.01	1.39	72	-1.8	80	0.070	99	99	2.9	-0.010468	300	292	269	325	317	301	602	162	83	57	83	55	69	-0.027	7.5	0.04
373	55.709	58.435	0.15	0.16	1.83	73	-0.93	1.39	72	-2	80	0.070	99	100	2.9	-0.008728	299	291	269	325	318	300	601	162	83	57	82	55	68	-0.026	7.53	0.04
374	55.859	58.591	0.15	0.16	1.82	73	-0.88	1.40	72	-1.8	80	0.070	100	99	2.9	0.000794	299	290	269	325	318	300	600	162	83	56	82	55	69	-0.026	7.53	0.03
375	56.009	58.748	0.15	0.16	1.82	73	-1.31	1.39	72	-2	80	0.070	100	100	2.9	-0.025879	298	289	268	325	318	300	598	161	83	56	82	55	69	-0.026	7.54	0.03
376	56.159	58.904	0.15	0.16	1.84	73	-0.93	1.39	72	-2	80	0.070	100	99	2.8	-0.035919	297	288	268	325	319	299	597	160	83	56	82	55	68	-0.026	7.55	0.03
377	56.309	59.060	0.15	0.16	1.82	73	-0.9	1.40	72	-1.8	80	0.070	100	99	2.8	0	296	288	268	325	319	299	596	160	83	56	83	55	68	-0.026	7.52	0.03
378	56.457	59.217	0.15	0.16	1.84	73	-0.9	1.39	72	-1.9	80	0.070	99	100	2.8	-0.015717	296	287	268	325	319	299	594	160	83	56	83	55	69	-0.026	7.44	0.03
379	56.607	59.373	0.15	0.16	1.84	73	-1.02	1.39	72	-2	80	0.070	100	99	2.8	0.001953	295	286	268	325	320	299	593	159	83	56	83	55	69	-0.026	7.44	0.04
380	56.757	59.529	0.15	0.16	1.84	73	-1.08	1.39	72	-1.7	80	0.070	100	99	2.8	-0.040008	294	285	268	325	320	298	592	159	83	56	83	55	68	-0.026	7.47	0.04
381	56.906	59.685	0.15	0.16	1.82	73	-0.93	1.39	72	-1.7	80	0.070	99	99	2.8	-0.006531	294	285	268	325	321	299	591	159	83	56	83	55	68	-0.026	7.48	0.04
382	57.056	59.841	0.15	0.16	1.83	73	-0.89	1.38	72	-1.7	80	0.070	100	99	2.8	0.004089	293	284	267	325	321	298	592	159	83	56	83	55	69	-0.026	7.58	0.04
383	57.205	59.998	0.15	0.16	1.83	73	-1.05	1.39	72	-1.8	79	0.070	99	100	2.7	-0.027405	292	283	267	325	321	298	592	158	83	56	83	55	69	-0.025	7.61	0.04
384	57.355	60.154	0.15	0.16	1.83	73	-1.27	1.39	72	-1.7	80	0.070	100	99	2.7	0.004639	292	283	267	325	321	298	591	158	83	56	83	55	68	-0.026	7.57	0.04

Wood Heater Test Data
Low Burn Emissions Data

Run: 2

Manufacturer: Kuma Stoves
Model: Aspen LE
Tracking No.: 2357
Project No.: 0123WM011E
Test Date: 26-Feb-19
Beginning Clock Time: 15:15

Total Sampling Time: 659 min
Recording Interval: 1 min
Background Sample Volume: 97.796 cubic feet

Meter Box Y Factor: 1.009 (1) 0.996 (2) 0.996 (Amb)

Barometric Pressure:	Begin	Middle	End	Average	
	28.47	28.44	28.4	28.44	0

OMNI Equipment Numbers:

PM Control Modules: 371, 372
Dilution Tunnel MW(dry): 29.00 lb/lb-mole
Dilution Tunnel MW(wet): 28.78 lb/lb-mole
Dilution Tunnel H2O: 2.00 percent
Dilution Tunnel Static: -0.110 "H2O
Tunnel Area: 0.19635 ft2
Pitot Tube Cp: 0.99

Avg. Tunnel Velocity: 18.29 ft/sec.
Initial Tunnel Flow: 192.7 scfm
Average Tunnel Flow: 194.5 scfm
Post-Test Leak Check (1): 0.000 cfm @ 9 in. Hg
Post-Test Leak Check (2): 0.000 cfm @ 10 in. Hg
Average Test Piece Fuel Moisture: 20.05 Dry Basis %

Technician Signature:

Velocity Traverse Data	Pt.1	Pt.2	Pt.3	Pt.4	Pt.5	Pt.6	Pt.7	Pt.8	Center	
Initial dP	0.068	0.072	0.072	0.070	0.066	0.068	0.076	0.070	0.070	"H2O
Temp:	96	96	96	96	95	95	95	95	96	°F

V_{strav} 18.47 ft/sec V_{scent} 18.45 ft/sec F_p 1.001

	Particulate Sampling Data														Fuel Weight (lb)		Temperature Data (°F)													Stack Gas Data		
Elapsed Time (min)	Gas Meter 1 (ft^3)	Gas Meter 2 (ft^3)	Sample Rate 1 (cfm)	Sample Rate 2 (cfm)	Orifice dH 1 ("H_2O)	Meter 1 Temp (°F)	Meter 1 Vacuum ("Hg)	Orifice dH 2 ("H_2O)	Meter 2 Temp (°F)	Meter 2 Vacuum ("Hg)	Dilution Tunnel (°F)	Dilution Tunnel Center dP	Pro. Rate 1	Pro. Rate 2	Scale Reading	Weight Change	Firebox Top	Firebox Bottom	Firebox Back	Firebox Left	Firebox Right	Avg. Stove Surface	Catalyst Exit	Stack	Filter 1	Dryer Exit 1	Filter 2	Dryer Exit 2	Ambient	Draft ("H_2O)	CO_2 (%)	CO (%)
385	57.505	60.310	0.15	0.16	1.84	73	-1.33	1.39	72	-1.8	80	0.070	100	99	2.7	-0.005554	291	282	267	325	322	297	590	158	83	56	83	55	69	-0.025	7.5	0.04
386	57.654	60.467	0.15	0.16	1.84	73	-0.94	1.39	72	-1.9	80	0.070	99	100	2.7	-0.018006	291	281	267	325	322	297	587	158	83	56	83	55	69	-0.026	7.45	0.04
387	57.803	60.623	0.15	0.16	1.85	73	-1.13	1.40	72	-1.9	79	0.070	99	99	2.7	-0.00357	290	281	267	325	323	297	586	157	83	56	83	55	69	-0.025	7.42	0.04
388	57.953	60.780	0.15	0.16	1.83	73	-1.34	1.39	72	-1.9	80	0.070	100	100	2.7	-0.013306	290	280	266	325	322	297	587	157	83	56	83	55	69	-0.025	7.49	0.04
389	58.102	60.936	0.15	0.16	1.83	72	-1.36	1.39	72	-1.9	80	0.070	100	99	2.7	-0.005859	289	279	266	325	321	296	587	157	83	56	83	55	69	-0.025	7.48	0.04
390	58.252	61.092	0.15	0.16	1.83	72	-0.89	1.39	72	-2	80	0.070	100	99	2.7	-0.009705	289	278	265	324	322	296	588	157	83	56	83	55	69	-0.025	7.48	0.04
391	58.401	61.248	0.15	0.16	1.83	72	-1.08	1.39	72	-1.8	80	0.070	100	99	2.7	-0.000427	288	278	265	325	322	296	589	157	83	56	83	55	69	-0.025	7.45	0.04
392	58.551	61.404	0.15	0.16	1.82	72	-0.93	1.39	72	-1.7	80	0.070	100	99	2.6	-0.058075	288	277	265	325	322	295	588	156	83	56	83	55	69	-0.025	7.47	0.04
393	58.700	61.561	0.15	0.16	1.82	72	-1.06	1.39	72	-1.8	80	0.070	100	100	2.6	0.010834	287	276	265	325	323	295	587	156	83	56	82	55	70	-0.025	7.46	0.04
394	58.850	61.717	0.15	0.16	1.84	72	-1.31	1.40	72	-2	80	0.070	100	99	2.6	-0.000672	287	276	264	324	322	295	587	156	83	56	82	55	69	-0.025	7.51	0.04
395	58.999	61.873	0.15	0.16	1.81	72	-0.9	1.39	72	-1.8	80	0.070	100	99	2.6	0.000824	287	275	264	324	322	294	588	155	83	56	83	55	69	-0.025	7.51	0.04
396	59.148	62.029	0.15	0.16	1.82	72	-0.9	1.39	72	-1.8	80	0.070	100	99	2.6	-0.020233	287	274	264	324	323	294	588	155	83	56	83	55	70	-0.025	7.53	0.04
397	59.297	62.186	0.15	0.16	1.84	72	-1.34	1.39	72	-2	80	0.070	100	100	2.6	-0.02893	286	274	263	324	323	294	587	155	83	56	83	55	71	-0.024	7.49	0.04
398	59.447	62.342	0.15	0.16	1.84	72	-0.92	1.39	72	-1.8	80	0.070	100	99	2.6	0.003143	286	273	263	325	323	294	587	155	83	56	83	55	70	-0.024	7.52	0.04
399	59.596	62.498	0.15	0.16	1.83	72	-1.12	1.38	72	-1.9	80	0.070	100	99	2.6	-0.001526	286	273	263	325	323	294	588	155	83	56	83	55	70	-0.025	7.54	0.04
400	59.746	62.654	0.15	0.16	1.83	72	-0.9	1.39	72	-1.9	80	0.070	100	99	2.5	-0.039947	286	272	263	325	324	294	588	155	83	56	83	55	71	-0.025	7.56	0.04
401	59.895	62.811	0.15	0.16	1.82	72	-1.31	1.39	72	-2	80	0.070	100	100	2.6	0.01004	286	272	263	325	324	294	588	154	83	56	83	54	72	-0.024	7.51	0.04
402	60.045	62.967	0.15	0.16	1.81	72	-1.02	1.39	72	-2	80	0.070	100	99	2.5	-0.015137	286	271	262	325	324	294	588	155	83	56	83	54	72	-0.024	7.52	0.04
403	60.194	63.123	0.15	0.16	1.81	72	-0.87	1.39	72	-1.8	80	0.070	100	99	2.5	-0.004364	285	271	262	325	324	293	588	154	83	56	83	54	71	-0.024	7.52	0.04
404	60.343	63.280	0.15	0.16	1.84	72	-0.98	1.39	72	-1.7	80	0.070	100	100	2.5	-0.026886	285	270	261	325	324	293	587	154	83	56	83	54	70	-0.025	7.52	0.04
405	60.493	63.436	0.15	0.16	1.84	72	-1.34	1.38	72	-1.9	80	0.070	100	99	2.5	-0.019195	285	270	261	325	325	293	587	154	84	56	83	55	70	-0.024	7.49	0.04
406	60.642	63.592	0.15	0.16	1.84	72	-1.29	1.39	72	-2	80	0.070	100	99	2.5	-0.001862	285	269	261	325	326	293	586	154	83	56	83	54	70	-0.025	7.49	0.04
407	60.791	63.748	0.15	0.16	1.84	72	-0.88	1.40	72	-1.9	80	0.070	100	99	2.5	0.002411	285	269	261	325	325	293	586	153	83	56	83	54	70	-0.024	7.51	0.04
408	60.940	63.904	0.15	0.16	1.84	72	-1.16	1.39	72	-1.7	80	0.070	100	99	2.5	-0.038696	284	268	261	325	325	293	586	153	83	56	83	54	71	-0.024	7.49	0.04
409	61.089	64.060	0.15	0.16	1.83	72	-0.91	1.39	72	-2	80	0.070	100	99	2.5	0.005188	284	268	260	325	326	293	585	153	83	56	83	54	69	-0.024	7.43	0.04
410	61.239	64.216	0.15	0.16	1.83	72	-1.24	1.39	72	-2	80	0.070	100	99	2.4	-0.008484	284	267	260	326	326	293	585	153	84	56	83	54	71	-0.024	7.46	0.04
411	61.388	64.372	0.15	0.16	1.82	72	-0.89	1.39	72	-1.7	80	0.070	100	99	2.4	-0.001587	284	267	260	326	326	293	585	153	84	56	84	54	71	-0.024	7.44	0.04
412	61.538	64.528	0.15	0.16	1.81	72	-1.35	1.38	72	-1.7	80	0.070	100	99	2.4	-0.03418	284	266	260	326	326	292	585	153	84	56	84	55	73	-0.024	7.46	0.04
413	61.687	64.685	0.15	0.16	1.81	72	-1.05	1.39	72	-2	80	0.070	100	100	2.4	0.001007	284	266	259	326	326	292	585	153	84	56	84	54	71	-0.024	7.46	0.04
414	61.836	64.841	0.15	0.16	1.84	72	-1.18	1.39	72	-1.8	80	0.070	100	99	2.4	0.008881	283	266	259	326	326	292	585	153	84	56	84	54	73	-0.024	7.47	0.04
415	61.985	64.997	0.15	0.16	1.82	72	-1.32	1.39	72	-1.8	80	0.070	100	99	2.4	-0.015076	283	265	259	326	326	292	585	152	84	56	84	54	72	-0.024	7.45	0.04
416	62.134	65.153	0.15	0.16	1.84	72	-1.34	1.39	72	-1.7	80	0.070	100	99	2.4	-0.047729	283	265	259	326	326	292	585	152	84	56	84	54	71	-0.024	7.49	0.04
417	62.283	65.310	0.15	0.16	1.84	72	-0.92	1.39	72	-2	80	0.070	100	100	2.3	-0.012879	283	264	258	326	327	292	586	152	84	56	84	54	72	-0.024	7.49	0.04
418	62.433	65.466	0.15	0.16	1.83	72	-1.36	1.39	72	-1.9	80	0.070	100	99	2.3	-0.001282	283	264	258	326	326	291	585	153	84	56	84	54	72	-0.024	7.47	0.04
419	62.581	65.622	0.15	0.16	1.83	72	-1.09	1.39	72	-2	80	0.070	99	99	2.3	0.000672	283	264	258	326	327	292	585	152	84	56	84	54	72	-0.024	7.42	0.04

Wood Heater Test Data
Low Burn Emissions Data

Run: 2

Manufacturer: Kuma Stoves
Model: Aspen LE
Tracking No.: 2357
Project No.: 0123WM011E
Test Date: 26-Feb-19
Beginning Clock Time: 15:15

Total Sampling Time: 659 min
Recording Interval: 1 min
Background Sample Volume: 97.796 cubic feet

Meter Box Y Factor: 1.009 (1) 0.996 (2) 0.996 (Amb)

Barometric Pressure:	Begin	Middle	End	Average	
	28.47	28.44	28.4	28.44	0

OMNI Equipment Numbers:

PM Control Modules: 371, 372
Dilution Tunnel MW(dry): 29.00 lb/lb-mole
Dilution Tunnel MW(wet): 28.78 lb/lb-mole
Dilution Tunnel H2O: 2.00 percent
Dilution Tunnel Static: -0.110 "H2O
Tunnel Area: 0.19635 ft2
Pitot Tube Cp: 0.99

Avg. Tunnel Velocity: 18.29 ft/sec.
Initial Tunnel Flow: 192.7 scfm
Average Tunnel Flow: 194.5 scfm
Post-Test Leak Check (1): 0.000 cfm @ 9 in. Hg
Post-Test Leak Check (2): 0.000 cfm @ 10 in. Hg
Average Test Piece Fuel Moisture: 20.05 Dry Basis %

Technician Signature:

Velocity Traverse Data	Pt.1	Pt.2	Pt.3	Pt.4	Pt.5	Pt.6	Pt.7	Pt.8	Center	
Initial dP	0.068	0.072	0.072	0.070	0.066	0.068	0.076	0.070	0.070	"H2O
Temp:	96	96	96	96	95	95	95	95	96	°F

V_{strav} 18.47 ft/sec V_{scent} 18.45 ft/sec F_p 1.001

	Particulate Sampling Data														Fuel Weight (lb)		Temperature Data (°F)													Stack Gas Data		
Elapsed Time (min)	Gas Meter 1 (ft^3)	Gas Meter 2 (ft^3)	Sample Rate 1 (cfm)	Sample Rate 2 (cfm)	Orifice dH 1 ("H_2O)	Meter 1 Temp (°F)	Meter 1 Vacuum ("Hg)	Orifice dH 2 ("H_2O)	Meter 2 Temp (°F)	Meter 2 Vacuum ("Hg)	Dilution Tunnel (°F)	Dilution Tunnel Center dP	Pro. Rate 1	Pro. Rate 2	Scale Reading	Weight Change	Firebox Top	Firebox Bottom	Firebox Back	Firebox Left	Firebox Right	Avg. Stove Surface	Catalyst Exit	Stack	Filter 1	Dryer Exit 1	Filter 2	Dryer Exit 2	Ambient	Draft ("H_2O)	CO_2 (%)	CO (%)
420	62.731	65.778	0.15	0.16	1.82	72	-1.31	1.38	72	-1.9	80	0.070	100	99	2.3	-0.003052	283	263	257	327	327	291	585	152	84	56	84	54	72	-0.024	7.36	0.04
421	62.880	65.934	0.15	0.16	1.82	72	-1.36	1.39	72	-2	80	0.070	100	99	2.3	-0.017456	283	263	258	327	327	292	585	152	84	56	84	54	72	-0.024	7.44	0.04
422	63.030	66.090	0.15	0.16	1.81	72	-0.86	1.40	72	-1.8	80	0.070	100	99	2.3	-0.013733	282	262	257	327	327	291	585	152	84	56	84	54	73	-0.024	7.46	0.04
423	63.179	66.246	0.15	0.16	1.83	72	-0.88	1.39	72	-1.7	80	0.070	100	99	2.3	0.003296	282	262	257	327	327	291	585	152	84	56	84	54	73	-0.024	7.38	0.04
424	63.328	66.402	0.15	0.16	1.83	72	-1.01	1.39	72	-1.8	80	0.070	100	99	2.3	-0.051636	282	262	257	327	327	291	584	152	84	56	84	54	73	-0.024	7.35	0.04
425	63.477	66.558	0.15	0.16	1.82	72	-1.19	1.39	72	-1.8	80	0.070	100	99	2.3	0.003723	282	261	256	327	327	291	584	152	84	56	84	54	73	-0.024	7.42	0.04
426	63.626	66.714	0.15	0.16	1.84	72	-1.32	1.39	72	-2	80	0.070	100	99	2.3	-0.006408	282	261	256	328	327	291	583	152	84	56	84	54	73	-0.024	7.35	0.04
427	63.775	66.870	0.15	0.16	1.84	72	-1.12	1.38	72	-1.8	80	0.070	100	99	2.3	-0.001953	281	260	256	328	328	291	581	151	84	56	84	54	72	-0.024	7.24	0.04
428	63.924	67.026	0.15	0.16	1.83	72	-1.27	1.39	72	-1.9	80	0.070	100	99	2.3	0.003021	281	260	255	328	328	290	579	152	84	56	84	54	72	-0.023	7.18	0.04
429	64.074	67.183	0.15	0.16	1.83	72	-1.06	1.38	72	-2	80	0.070	100	100	2.2	-0.036347	281	260	255	328	328	290	578	151	84	55	84	54	73	-0.024	7.18	0.04
430	64.223	67.338	0.15	0.15	1.83	72	-1.3	1.39	72	-1.8	80	0.070	100	99	2.2	-0.000457	280	259	254	329	328	290	578	151	84	56	84	54	71	-0.024	7.13	0.04
431	64.372	67.495	0.15	0.16	1.82	72	-1.34	1.38	72	-1.8	80	0.070	100	100	2.2	-0.029328	280	259	254	329	328	290	577	151	84	56	84	54	72	-0.024	7.14	0.04
432	64.521	67.651	0.15	0.16	1.81	72	-1.33	1.39	72	-1.8	80	0.070	100	99	2.2	-0.000824	279	259	254	329	328	290	576	151	84	56	84	54	72	-0.024	7.14	0.04
433	64.671	67.807	0.15	0.16	1.82	72	-1.21	1.39	72	-1.8	80	0.070	100	99	2.2	-0.021881	279	258	253	329	328	289	576	150	84	56	84	54	72	-0.023	7.14	0.04
434	64.820	67.964	0.15	0.16	1.82	72	-0.87	1.39	71	-2	80	0.070	100	100	2.2	-0.00058	279	258	253	329	328	289	576	151	84	55	84	54	70	-0.023	7.16	0.05
435	64.969	68.120	0.15	0.16	1.83	72	-1.2	1.38	71	-1.8	80	0.070	100	100	2.2	0.004883	278	257	252	330	328	289	576	151	84	56	84	54	71	-0.023	7.18	0.05
436	65.118	68.276	0.15	0.16	1.84	72	-0.87	1.39	71	-1.7	80	0.070	100	100	2.2	-0.014496	278	257	252	330	329	289	576	151	84	55	83	54	71	-0.024	7.16	0.05
437	65.267	68.432	0.15	0.16	1.83	72	-1.14	1.38	71	-1.9	80	0.070	100	100	2.2	-0.000335	278	257	252	330	329	289	576	150	84	55	83	54	70	-0.024	7.17	0.05
438	65.416	68.588	0.15	0.16	1.84	72	-1.27	1.39	71	-1.7	80	0.070	100	100	2.1	-0.024659	277	256	251	330	329	289	575	150	84	55	84	54	72	-0.024	7.17	0.05
439	65.566	68.744	0.15	0.16	1.83	72	-1.04	1.40	71	-2	80	0.070	100	100	2.1	0.003907	277	256	251	331	329	289	575	150	84	55	84	54	72	-0.023	7.17	0.05
440	65.715	68.900	0.15	0.16	1.82	72	-0.87	1.39	71	-1.9	80	0.070	100	100	2.1	-0.016449	276	255	251	331	329	288	574	150	84	55	83	54	72	-0.023	7.07	0.05
441	65.864	69.056	0.15	0.16	1.82	72	-1.03	1.39	71	-1.8	80	0.070	100	100	2.1	-0.002991	276	255	250	331	329	288	573	150	84	55	83	54	72	-0.023	7.07	0.05
442	66.013	69.212	0.15	0.16	1.82	72	-1.15	1.38	71	-1.8	80	0.070	100	100	2.1	-0.029755	276	254	250	332	329	288	573	150	84	55	83	54	72	-0.023	7.07	0.05
443	66.163	69.368	0.15	0.16	1.81	72	-1.24	1.40	71	-1.9	80	0.070	100	100	2.1	0.000367	276	254	249	332	329	288	572	150	84	55	83	54	71	-0.023	7.09	0.05
444	66.312	69.525	0.15	0.16	1.84	72	-1.24	1.38	71	-2	80	0.070	100	100	2.1	-0.007477	275	254	249	332	329	288	573	150	84	55	83	54	72	-0.023	7.09	0.05
445	66.461	69.681	0.15	0.16	1.84	72	-1.32	1.39	71	-1.8	80	0.070	100	100	2.1	-0.007691	275	253	249	333	329	288	573	150	84	56	83	54	70	-0.023	7.1	0.05
446	66.610	69.837	0.15	0.16	1.83	72	-1.35	1.38	71	-1.8	80	0.070	100	100	2.0	-0.034881	274	253	248	333	329	287	572	150	84	55	83	54	71	-0.023	7.06	0.05
447	66.759	69.993	0.15	0.16	1.84	72	-1.21	1.40	71	-1.8	80	0.070	100	100	2.1	0.011627	274	252	248	333	329	287	572	149	84	55	83	54	72	-0.023	7.04	0.05
448	66.908	70.149	0.15	0.16	1.84	72	-1.3	1.39	71	-1.7	80	0.070	100	100	2.0	-0.015534	274	252	248	334	329	287	572	149	84	55	84	54	73	-0.023	7	0.05
449	67.057	70.306	0.15	0.16	1.84	72	-0.92	1.39	71	-2	80	0.070	100	100	2.0	-0.003021	274	251	247	334	329	287	572	150	84	55	84	54	70	-0.024	7	0.05
450	67.207	70.462	0.15	0.16	1.83	72	-1.28	1.39	71	-1.8	80	0.070	100	100	2.0	0.000824	273	251	247	334	329	287	572	149	84	55	84	54	71	-0.023	7.04	0.05
451	67.356	70.618	0.15	0.16	1.82	72	-1.14	1.39	71	-1.9	80	0.070	100	100	2.0	-0.024811	273	251	246	335	329	287	572	149	84	55	84	54	72	-0.023	7.03	0.05
452	67.505	70.774	0.15	0.16	1.82	72	-1.19	1.38	71	-1.9	80	0.070	100	100	2.0	-0.003082	273	250	246	335	328	286	575	149	84	55	84	54	71	-0.023	7.07	0.05
453	67.655	70.930	0.15	0.16	1.81	72	-0.87	1.39	71	-2	80	0.070	100	100	2.0	-0.021454	274	250	246	336	328	287	584	149	84	56	84	54	71	-0.023	7.3	0.05
454	67.804	71.086	0.15	0.16	1.83	72	-0.92	1.40	71	-2	80	0.070	100	100	2.0	0.000244	274	249	245	336	328	286	589	150	84	55	84	54	71	-0.023	7.42	0.06

Wood Heater Test Data
Low Burn Emissions Data

Run: 2

Manufacturer: Kuma Stoves
Model: Aspen LE
Tracking No.: 2357
Project No.: 0123WM011E
Test Date: 26-Feb-19
Beginning Clock Time: 15:15

Total Sampling Time: 659 min
Recording Interval: 1 min
Background Sample Volume: 97.796 cubic feet

Meter Box Y Factor: 1.009 (1) 0.996 (2) 0.996 (Amb)

Barometric Pressure:	Begin	Middle	End	Average	
	28.47	28.44	28.4	28.44	0

OMNI Equipment Numbers:

PM Control Modules: 371, 372
Dilution Tunnel MW(dry): 29.00 lb/lb-mole
Dilution Tunnel MW(wet): 28.78 lb/lb-mole
Dilution Tunnel H2O: 2.00 percent
Dilution Tunnel Static: -0.110 "H2O
Tunnel Area: 0.19635 ft2
Pitot Tube Cp: 0.99

Avg. Tunnel Velocity: 18.29 ft/sec.
Initial Tunnel Flow: 192.7 scfm
Average Tunnel Flow: 194.5 scfm
Post-Test Leak Check (1): 0.000 cfm @ 9 in. Hg
Post-Test Leak Check (2): 0.000 cfm @ 10 in. Hg
Average Test Piece Fuel Moisture: 20.05 Dry Basis %

Technician Signature:

Velocity Traverse Data	Pt.1	Pt.2	Pt.3	Pt.4	Pt.5	Pt.6	Pt.7	Pt.8	Center	
Initial dP	0.068	0.072	0.072	0.070	0.066	0.068	0.076	0.070	0.070	"H2O
Temp:	96	96	96	96	95	95	95	95	96	°F

V_{strav} 18.47 ft/sec V_{scent} 18.45 ft/sec F_p 1.001

	Particulate Sampling Data														Fuel Weight (lb)		Temperature Data (°F)													Stack Gas Data		
Elapsed Time (min)	Gas Meter 1 (ft^3)	Gas Meter 2 (ft^3)	Sample Rate 1 (cfm)	Sample Rate 2 (cfm)	Orifice dH 1 ("H_2O)	Meter 1 Temp (°F)	Meter 1 Vacuum ("Hg)	Orifice dH 2 ("H_2O)	Meter 2 Temp (°F)	Meter 2 Vacuum ("Hg)	Dilution Tunnel (°F)	Dilution Tunnel Center dP	Pro. Rate 1	Pro. Rate 2	Scale Reading	Weight Change	Firebox Top	Firebox Bottom	Firebox Back	Firebox Left	Firebox Right	Avg. Stove Surface	Catalyst Exit	Stack	Filter 1	Dryer Exit 1	Filter 2	Dryer Exit 2	Ambient	Draft ("H_2O)	CO_2 (%)	CO (%)
455	67.953	71.242	0.15	0.16	1.84	72	-1.33	1.39	71	-1.8	80	0.070	100	100	2.0	-0.024475	274	249	245	336	328	286	591	150	84	55	84	54	71	-0.023	7.49	0.06
456	68.102	71.398	0.15	0.16	1.81	72	-1.07	1.39	71	-1.9	80	0.070	100	100	2.0	0.010651	275	249	245	337	328	287	592	150	84	55	84	54	72	-0.024	7.44	0.06
457	68.251	71.554	0.15	0.16	1.84	72	-1.3	1.39	71	-1.9	80	0.070	100	100	1.9	-0.027802	275	248	244	337	328	286	595	150	84	55	84	54	70	-0.024	7.54	0.06
458	68.400	71.710	0.15	0.16	1.84	72	-0.87	1.39	71	-1.9	80	0.070	100	100	1.9	0.001618	276	248	244	337	328	287	595	149	84	55	84	54	71	-0.023	7.56	0.06
459	68.549	71.866	0.15	0.16	1.83	72	-0.89	1.38	71	-1.8	80	0.070	100	100	1.9	-0.000488	276	248	244	338	328	287	595	150	84	55	84	54	70	-0.023	7.59	0.06
460	68.698	72.022	0.15	0.16	1.83	72	-0.87	1.39	71	-1.8	80	0.070	100	100	1.9	-0.060547	276	247	243	338	327	286	595	150	84	55	84	54	70	-0.024	7.58	0.05
461	68.847	72.178	0.15	0.16	1.82	72	-1.27	1.38	71	-1.8	80	0.070	100	100	1.9	0.013305	277	247	243	338	327	286	594	150	83	55	83	54	69	-0.024	7.57	0.05
462	68.996	72.334	0.15	0.16	1.82	72	-1.05	1.39	71	-2	80	0.070	100	100	1.9	-0.000854	277	247	242	339	327	286	593	150	83	55	83	54	70	-0.024	7.56	0.05
463	69.146	72.490	0.15	0.16	1.81	72	-1.12	1.38	71	-1.9	80	0.070	100	100	1.9	-0.027008	277	246	242	339	326	286	592	150	83	55	83	54	71	-0.023	7.54	0.05
464	69.295	72.646	0.15	0.16	1.81	72	-1.03	1.38	71	-1.8	80	0.070	100	100	1.9	0.000305	277	246	242	340	326	286	591	149	83	55	83	54	69	-0.024	7.55	0.05
465	69.444	72.802	0.15	0.16	1.81	72	-1.27	1.38	71	-2	80	0.070	100	100	1.9	-0.014832	277	246	241	340	326	286	590	150	83	55	83	54	69	-0.024	7.56	0.05
466	69.593	72.958	0.15	0.16	1.83	72	-1.27	1.39	71	-1.8	80	0.070	100	100	1.9	-0.0018	277	246	241	341	326	286	590	150	83	55	83	54	70	-0.024	7.56	0.05
467	69.742	73.114	0.15	0.16	1.83	72	-1.26	1.38	71	-1.7	80	0.070	100	100	1.8	-0.024658	277	245	240	341	325	286	589	149	83	55	83	54	69	-0.023	7.51	0.05
468	69.891	73.270	0.15	0.16	1.83	72	-0.87	1.38	71	-1.9	80	0.070	100	100	1.8	-0.010254	277	245	240	342	325	286	589	150	83	55	83	54	69	-0.023	7.54	0.05
469	70.040	73.426	0.15	0.16	1.83	72	-1.03	1.38	71	-1.8	80	0.070	100	100	1.8	-0.008881	277	245	240	342	325	286	588	150	83	55	83	54	70	-0.023	7.47	0.05
470	70.189	73.582	0.15	0.16	1.83	72	-1.14	1.39	71	-1.8	80	0.070	100	100	1.8	0.003815	277	244	239	343	325	286	588	149	83	55	83	54	70	-0.023	7.51	0.05
471	70.338	73.738	0.15	0.16	1.82	72	-0.87	1.38	71	-2	80	0.070	100	100	1.8	-0.023743	277	244	239	344	325	286	587	149	83	55	83	54	69	-0.024	7.49	0.05
472	70.487	73.894	0.15	0.16	1.82	72	-1.19	1.38	71	-2	80	0.070	100	100	1.8	-0.01416	277	244	238	345	325	286	587	149	83	55	83	54	70	-0.023	7.47	0.05
473	70.636	74.050	0.15	0.16	1.82	72	-1.24	1.39	71	-2	80	0.070	100	100	1.8	0.01474	277	243	238	345	325	286	587	149	83	55	84	54	71	-0.023	7.51	0.05
474	70.785	74.206	0.15	0.16	1.81	72	-1.09	1.39	71	-2	80	0.070	100	100	1.8	-0.023926	277	243	238	346	324	286	586	149	83	55	84	54	70	-0.023	7.49	0.05
475	70.934	74.361	0.15	0.16	1.82	72	-1.25	1.39	71	-1.9	80	0.070	100	99	1.8	-0.016845	277	243	238	347	324	286	586	149	83	55	83	54	72	-0.023	7.48	0.05
476	71.084	74.517	0.15	0.16	1.82	72	-1.13	1.39	71	-1.9	80	0.070	100	100	1.7	-0.021821	277	243	238	348	324	286	586	149	83	55	83	54	71	-0.023	7.48	0.05
477	71.233	74.673	0.15	0.16	1.83	72	-0.92	1.39	71	-1.8	80	0.070	100	100	1.7	-0.000152	277	242	237	349	324	286	586	149	83	55	83	54	70	-0.023	7.47	0.05
478	71.382	74.829	0.15	0.16	1.84	72	-0.89	1.38	71	-1.7	80	0.070	100	100	1.7	-0.004852	277	242	237	349	324	286	585	149	83	55	83	54	71	-0.023	7.47	0.05
479	71.530	74.985	0.15	0.16	1.84	72	-1.1	1.39	71	-2	80	0.070	99	100	1.7	0.000274	276	242	237	350	324	286	585	149	83	55	83	54	71	-0.023	7.46	0.05
480	71.679	75.141	0.15	0.16	1.83	72	-1.29	1.38	71	-1.9	80	0.070	100	100	1.7	-0.028717	276	242	236	351	323	286	584	149	83	55	83	54	71	-0.023	7.44	0.05
481	71.828	75.297	0.15	0.16	1.83	72	-0.93	1.38	71	-1.9	80	0.070	100	100	1.7	-0.00885	276	241	236	352	323	286	584	148	83	55	83	54	70	-0.023	7.44	0.05
482	71.977	75.453	0.15	0.16	1.82	72	-0.87	1.38	71	-1.7	80	0.070	100	100	1.7	-0.013824	276	241	236	352	323	286	586	149	83	55	83	54	70	-0.023	7.62	0.05
483	72.127	75.609	0.15	0.16	1.82	72	-1.31	1.39	71	-1.7	80	0.070	100	100	1.6	-0.033905	276	241	235	353	323	286	589	149	83	55	83	54	71	-0.023	7.8	0.06
484	72.276	75.765	0.15	0.16	1.82	72	-1	1.38	71	-1.9	80	0.070	100	100	1.6	0.000702	277	241	235	354	322	286	590	148	83	55	83	54	70	-0.023	7.86	0.06
485	72.425	75.921	0.15	0.16	1.81	72	-1.12	1.39	71	-1.8	79	0.070	99	99	1.6	-0.033021	277	240	235	355	322	286	590	148	83	55	83	54	71	-0.023	7.78	0.05
486	72.574	76.077	0.15	0.16	1.81	72	-1.32	1.38	71	-1.7	80	0.070	100	100	1.6	0.00055	277	240	235	355	322	286	589	148	83	55	83	54	70	-0.023	7.66	0.05
487	72.723	76.233	0.15	0.16	1.83	72	-0.88	1.39	71	-1.8	79	0.070	99	99	1.6	0	277	240	234	356	322	286	589	148	83	55	83	54	70	-0.023	7.63	0.05
488	72.873	76.389	0.15	0.16	1.82	72	-0.91	1.38	71	-1.9	79	0.070	100	99	1.6	-0.016724	277	240	234	356	321	286	588	148	83	55	83	54	68	-0.023	7.58	0.05
489	73.022	76.545	0.15	0.16	1.81	72	-1.18	1.39	71	-1.8	79	0.070	99	99	1.6	0.010193	278	239	234	357	321	286	587	148	83	55	83	54	68	-0.023	7.56	0.05

Wood Heater Test Data
Low Burn Emissions Data

Run: 2

Manufacturer: Kuma Stoves
Model: Aspen LE
Tracking No.: 2357
Project No.: 0123WM011E
Test Date: 26-Feb-19
Beginning Clock Time: 15:15

Total Sampling Time: 659 min
Recording Interval: 1 min
Background Sample Volume: 97.796 cubic feet

Meter Box Y Factor: 1.009 (1) 0.996 (2) 0.996 (Amb)

Barometric Pressure:	Begin	Middle	End	Average	
	28.47	28.44	28.4	28.44	0

OMNI Equipment Numbers:

PM Control Modules: 371, 372
Dilution Tunnel MW(dry): 29.00 lb/lb-mole
Dilution Tunnel MW(wet): 28.78 lb/lb-mole
Dilution Tunnel H2O: 2.00 percent
Dilution Tunnel Static: -0.110 "H2O
Tunnel Area: 0.19635 ft2
Pitot Tube Cp: 0.99

Avg. Tunnel Velocity: 18.29 ft/sec.
Initial Tunnel Flow: 192.7 scfm
Average Tunnel Flow: 194.5 scfm
Post-Test Leak Check (1): 0.000 cfm @ 9 in. Hg
Post-Test Leak Check (2): 0.000 cfm @ 10 in. Hg
Average Test Piece Fuel Moisture: 20.05 Dry Basis %

Technician Signature:

Velocity Traverse Data	Pt.1	Pt.2	Pt.3	Pt.4	Pt.5	Pt.6	Pt.7	Pt.8	Center	
Initial dP	0.068	0.072	0.072	0.070	0.066	0.068	0.076	0.070	0.070	"H2O
Temp:	96	96	96	96	95	95	95	95	96	°F

V_{strav} 18.47 ft/sec V_{scent} 18.45 ft/sec F_p 1.001

	Particulate Sampling Data														Fuel Weight (lb)		Temperature Data (°F)													Stack Gas Data		
Elapsed Time (min)	Gas Meter 1 (ft^3)	Gas Meter 2 (ft^3)	Sample Rate 1 (cfm)	Sample Rate 2 (cfm)	Orifice dH 1 ("H_2O)	Meter 1 Temp (°F)	Meter 1 Vacuum ("Hg)	Orifice dH 2 ("H_2O)	Meter 2 Temp (°F)	Meter 2 Vacuum ("Hg)	Dilution Tunnel (°F)	Dilution Tunnel Center dP	Pro. Rate 1	Pro. Rate 2	Scale Reading	Weight Change	Firebox Top	Firebox Bottom	Firebox Back	Firebox Left	Firebox Right	Avg. Stove Surface	Catalyst Exit	Stack	Filter 1	Dryer Exit 1	Filter 2	Dryer Exit 2	Ambient	Draft ("H_2O)	CO_2 (%)	CO (%)
490	73.170	76.701	0.15	0.16	1.84	72	-1.28	1.39	71	-1.7	79	0.070	99	99	1.6	-0.014496	278	239	233	358	321	286	587	149	83	55	83	54	69	-0.023	7.53	0.05
491	73.319	76.857	0.15	0.16	1.83	72	-0.87	1.39	71	-1.9	79	0.070	99	99	1.6	-0.000885	278	239	233	358	320	286	586	148	83	55	83	54	68	-0.023	7.49	0.05
492	73.468	77.013	0.15	0.16	1.83	72	-1.28	1.37	71	-1.8	79	0.070	99	99	1.5	-0.049408	278	239	233	359	320	286	586	148	83	55	83	54	69	-0.023	7.49	0.05
493	73.617	77.169	0.15	0.16	1.83	72	-0.87	1.39	71	-1.9	79	0.070	99	99	1.5	-0.001434	278	239	233	359	321	286	586	148	83	55	83	54	70	-0.023	7.47	0.05
494	73.767	77.325	0.15	0.16	1.82	72	-1.21	1.39	71	-1.8	79	0.070	100	99	1.5	0.013061	278	238	232	359	320	285	586	148	83	55	83	54	70	-0.023	7.49	0.05
495	73.916	77.481	0.15	0.16	1.81	72	-0.99	1.39	71	-1.9	79	0.070	99	99	1.5	-0.006439	278	238	232	360	319	285	585	148	83	55	83	54	69	-0.023	7.49	0.05
496	74.065	77.637	0.15	0.16	1.81	72	-0.9	1.38	71	-1.8	79	0.070	99	99	1.5	0.000153	278	238	232	360	320	286	585	148	83	55	83	54	70	-0.023	7.46	0.05
497	74.215	77.793	0.15	0.16	1.81	72	-0.91	1.39	71	-2	79	0.070	100	99	1.5	-0.023133	278	238	232	360	320	286	585	148	83	55	83	54	69	-0.023	7.47	0.05
498	74.364	77.948	0.15	0.15	1.84	71	-1.18	1.40	71	-2	79	0.070	100	99	1.5	-0.031829	278	238	231	361	319	285	584	148	83	55	82	54	68	-0.023	7.46	0.05
499	74.513	78.105	0.15	0.16	1.84	71	-1.32	1.39	71	-2	79	0.070	100	100	1.5	0.00296	278	238	231	361	318	285	584	147	83	55	82	54	68	-0.023	7.46	0.05
500	74.662	78.261	0.15	0.16	1.84	72	-1.35	1.39	71	-2	79	0.070	99	99	1.5	-0.02887	278	238	230	361	318	285	584	148	83	55	82	54	68	-0.023	7.42	0.05
501	74.811	78.417	0.15	0.16	1.83	71	-1.06	1.38	71	-1.7	79	0.070	100	99	1.5	0.002533	277	237	230	361	318	285	584	148	82	55	82	54	69	-0.023	7.4	0.05
502	74.960	78.573	0.15	0.16	1.83	71	-1.34	1.39	71	-2	79	0.070	100	99	1.5	-0.010071	277	237	230	362	317	285	583	148	82	55	82	54	68	-0.024	7.39	0.05
503	75.109	78.729	0.15	0.16	1.84	71	-0.98	1.38	71	-1.8	78	0.070	100	99	1.4	-0.005035	277	237	230	362	317	285	582	147	82	55	82	54	69	-0.024	7.39	0.05
504	75.258	78.885	0.15	0.16	1.83	71	-1.3	1.39	71	-1.9	78	0.070	100	99	1.5	0.002228	277	237	230	362	318	285	582	148	82	55	82	54	68	-0.023	7.37	0.05
505	75.407	79.041	0.15	0.16	1.82	71	-1.14	1.38	71	-2	78	0.070	100	99	1.4	-0.026215	277	237	229	362	317	284	581	148	82	55	82	54	68	-0.023	7.38	0.05
506	75.557	79.197	0.15	0.16	1.81	71	-1.28	1.39	71	-1.8	78	0.070	100	99	1.4	-0.015961	277	237	229	362	317	284	581	147	82	55	82	54	68	-0.023	7.34	0.05
507	75.706	79.353	0.15	0.16	1.81	71	-0.88	1.39	71	-2	78	0.070	100	99	1.4	-0.000213	277	237	229	362	316	284	581	147	82	55	82	54	68	-0.023	7.39	0.05
508	75.855	79.510	0.15	0.16	1.83	71	-1.02	1.39	71	-1.9	78	0.070	100	100	1.4	0.000763	276	237	229	362	316	284	581	147	82	55	82	54	68	-0.023	7.42	0.05
509	76.005	79.666	0.15	0.16	1.82	71	-1.35	1.39	71	-1.9	78	0.070	100	99	1.4	0.000427	276	237	229	362	316	284	581	147	82	55	82	54	69	-0.023	7.39	0.05
510	76.154	79.822	0.15	0.16	1.81	71	-1.18	1.39	71	-1.7	78	0.070	100	99	1.4	-0.032165	276	236	228	362	316	284	580	147	82	55	82	54	69	-0.023	7.39	0.05
511	76.302	79.978	0.15	0.16	1.84	71	-0.86	1.37	71	-1.9	78	0.070	99	99	1.4	-0.001282	276	236	228	362	315	283	579	147	82	55	82	54	68	-0.023	7.35	0.05
512	76.452	80.134	0.15	0.16	1.82	71	-1.03	1.39	71	-1.7	78	0.070	100	99	1.4	-0.020081	276	236	228	362	315	283	579	148	82	55	82	54	69	-0.023	7.37	0.05
513	76.601	80.290	0.15	0.16	1.83	71	-1.07	1.40	71	-2	78	0.070	100	99	1.3	-0.037872	276	236	228	362	315	283	579	147	82	55	82	54	68	-0.023	7.3	0.05
514	76.750	80.446	0.15	0.16	1.83	71	-1.27	1.39	71	-2	78	0.070	100	99	1.3	-0.001099	275	236	228	362	315	283	578	147	82	55	82	54	68	-0.024	7.3	0.05
515	76.899	80.602	0.15	0.16	1.83	71	-1.2	1.39	71	-2	78	0.070	100	99	1.3	0.001587	275	236	227	362	314	283	577	147	82	55	81	54	68	-0.024	7.24	0.05
516	77.048	80.758	0.15	0.16	1.82	71	-1.31	1.39	71	-1.9	78	0.070	100	99	1.3	-0.0065	275	236	227	362	314	283	577	147	82	55	81	54	68	-0.023	7.23	0.05
517	77.198	80.914	0.15	0.16	1.82	71	-1.09	1.39	71	-1.9	78	0.070	100	99	1.3	0.000153	275	236	227	362	314	283	576	147	83	55	81	54	68	-0.023	7.25	0.05
518	77.347	81.070	0.15	0.16	1.82	71	-1.05	1.38	71	-1.8	78	0.070	100	99	1.3	-0.000367	275	236	227	362	314	283	576	146	83	55	81	54	68	-0.023	7.24	0.05
519	77.496	81.226	0.15	0.16	1.83	71	-0.95	1.39	71	-1.9	77	0.070	99	99	1.3	-0.023712	275	236	227	361	313	282	575	147	83	55	82	54	68	-0.023	7.25	0.05
520	77.645	81.383	0.15	0.16	1.84	71	-0.96	1.38	71	-1.9	77	0.070	99	100	1.3	0	274	236	226	361	314	282	574	147	84	55	82	54	68	-0.023	7.25	0.05
521	77.794	81.539	0.15	0.16	1.84	71	-0.97	1.39	71	-2	77	0.070	99	99	1.3	-0.02478	274	236	226	361	313	282	574	146	84	55	81	54	67	-0.023	7.18	0.05
522	77.943	81.695	0.15	0.16	1.83	71	-0.89	1.38	71	-1.9	77	0.070	99	99	1.3	-0.008972	274	236	226	361	313	282	573	146	84	55	81	54	68	-0.024	7.16	0.05
523	78.093	81.851	0.15	0.16	1.83	71	-0.86	1.39	71	-1.9	77	0.070	100	99	1.3	0.000702	274	236	226	361	313	282	572	146	84	55	81	54	68	-0.023	7.14	0.05
524	78.242	82.007	0.15	0.16	1.83	71	-1.3	1.39	71	-1.9	77	0.070	99	99	1.3	0.001983	273	236	226	360	312	281	571	146	84	55	81	54	68	-0.023	7.11	0.05

Wood Heater Test Data
Low Burn Emissions Data

Run: 2

Manufacturer: Kuma Stoves
Model: Aspen LE
Tracking No.: 2357
Project No.: 0123WM011E
Test Date: 26-Feb-19
Beginning Clock Time: 15:15

Total Sampling Time: 659 min
Recording Interval: 1 min
Background Sample Volume: 97.796 cubic feet

Meter Box Y Factor: 1.009 (1) 0.996 (2) 0.996 (Amb)

Barometric Pressure:	Begin	Middle	End	Average	
	28.47	28.44	28.4	28.44	0

OMNI Equipment Numbers:

PM Control Modules: 371, 372
Dilution Tunnel MW(dry): 29.00 lb/lb-mole
Dilution Tunnel MW(wet): 28.78 lb/lb-mole
Dilution Tunnel H2O: 2.00 percent
Dilution Tunnel Static: -0.110 "H2O
Tunnel Area: 0.19635 ft2
Pitot Tube Cp: 0.99

Avg. Tunnel Velocity: 18.29 ft/sec.
Initial Tunnel Flow: 192.7 scfm
Average Tunnel Flow: 194.5 scfm
Post-Test Leak Check (1): 0.000 cfm @ 9 in. Hg
Post-Test Leak Check (2): 0.000 cfm @ 10 in. Hg
Average Test Piece Fuel Moisture: 20.05 Dry Basis %

Technician Signature:

Velocity Traverse Data	Pt.1	Pt.2	Pt.3	Pt.4	Pt.5	Pt.6	Pt.7	Pt.8	Center	
Initial dP	0.068	0.072	0.072	0.070	0.066	0.068	0.076	0.070	0.070	"H2O
Temp:	96	96	96	96	95	95	95	95	96	°F

V_{strav} 18.47 ft/sec V_{scent} 18.45 ft/sec F_p 1.001

	Particulate Sampling Data														Fuel Weight (lb)		Temperature Data (°F)												Stack Gas Data		
Elapsed Time (min)	Gas Meter 1 (ft^3)	Gas Meter 2 (ft^3)	Sample Rate 1 (cfm)	Sample Rate 2 (cfm)	Orifice dH 1 ("H_2O)	Meter 1 Temp (°F)	Meter 1 Vacuum ("Hg)	Orifice dH 2 ("H_2O)	Meter 2 Temp (°F)	Meter 2 Vacuum ("Hg)	Dilution Tunnel (°F)	Dilution Tunnel Center dP	Pro. Rate 1	Pro. Rate 2	Scale Reading	Weight Change	Firebox Top	Firebox Bottom	Firebox Back	Firebox Left	Firebox Right	Avg. Stove Surface	Catalyst Exit	Stack	Filter 1	Dryer Exit 1	Filter 2	Dryer Exit 2	Ambient	Draft ("H_2O)	CO_2 (%)	CO (%)
525	78.391	82.163	0.15	0.16	1.82	71	-0.86	1.39	71	-1.9	77	0.070	99	99	1.2	-0.029999	273	236	225	360	312	281	571	146	84	55	81	54	67	-0.024	7.11	0.05
526	78.540	82.320	0.15	0.16	1.82	71	-1.05	1.38	71	-1.9	77	0.070	99	100	1.2	0.004761	273	236	225	360	311	281	571	146	84	55	81	54	67	-0.024	7.07	0.05
527	78.690	82.476	0.15	0.16	1.81	71	-1.35	1.39	71	-1.7	77	0.070	100	99	1.2	-0.05307	272	236	225	360	312	281	570	146	84	55	81	54	67	-0.024	7.1	0.05
528	78.839	82.632	0.15	0.16	1.81	71	-0.87	1.39	71	-1.8	77	0.070	99	99	1.2	0.006104	272	235	225	359	311	280	570	146	84	55	81	54	68	-0.024	7.04	0.05
529	78.988	82.788	0.15	0.16	1.83	71	-1.11	1.39	71	-1.8	77	0.070	99	99	1.2	-0.006867	272	235	225	359	311	280	570	146	84	55	81	54	67	-0.024	7.04	0.05
530	79.137	82.944	0.15	0.16	1.82	71	-1.34	1.39	71	-2	77	0.070	99	99	1.2	0.000824	271	235	224	359	311	280	569	146	84	55	81	54	67	-0.023	7.03	0.05
531	79.286	83.100	0.15	0.16	1.83	71	-1.06	1.39	71	-2	77	0.070	99	99	1.2	0.000977	271	235	224	358	311	280	569	146	84	55	81	54	66	-0.024	7	0.05
532	79.435	83.256	0.15	0.16	1.84	71	-0.86	1.40	71	-1.9	77	0.070	99	99	1.2	0.001526	271	235	224	358	311	280	568	146	84	55	80	54	67	-0.024	7	0.05
533	79.585	83.412	0.15	0.16	1.84	71	-0.93	1.39	71	-2	76	0.070	100	99	1.2	-0.030701	271	235	224	358	311	280	568	146	84	55	80	54	66	-0.024	7	0.05
534	79.734	83.568	0.15	0.16	1.84	71	-0.95	1.39	71	-2	76	0.070	99	99	1.1	-0.001373	270	235	224	358	310	279	567	146	83	55	80	54	67	-0.023	7.02	0.05
535	79.883	83.725	0.15	0.16	1.83	71	-0.87	1.39	70	-1.8	77	0.070	99	100	1.1	-0.019226	270	235	224	358	310	279	567	146	83	55	80	54	66	-0.024	7.02	0.05
536	80.032	83.881	0.15	0.16	1.82	71	-0.88	1.40	71	-2	76	0.070	99	99	1.1	-0.026062	270	235	223	358	310	279	568	146	86	55	79	54	67	-0.024	7.04	0.05
537	80.182	84.037	0.15	0.16	1.81	71	-1.1	1.39	70	-1.9	76	0.070	100	99	1.1	3E-05	269	234	223	358	309	279	568	146	86	55	79	54	67	-0.024	6.97	0.05
538	80.331	84.194	0.15	0.16	1.81	71	-1.21	1.40	70	-1.7	76	0.070	99	100	1.1	-0.023437	269	234	223	357	309	278	567	146	84	55	79	54	67	-0.024	6.95	0.05
539	80.480	84.350	0.15	0.16	1.84	71	-0.96	1.39	70	-2	76	0.070	99	99	1.1	0.002746	269	234	223	357	309	278	568	146	81	55	82	54	66	-0.024	7.02	0.05
540	80.630	84.507	0.15	0.16	1.82	71	-1.21	1.38	70	-1.8	76	0.070	100	100	1.1	-0.000885	268	234	223	357	309	278	568	146	80	55	85	54	67	-0.024	7	0.05
541	80.779	84.663	0.15	0.16	1.82	71	-1.28	1.38	70	-2	76	0.070	99	99	1.1	-0.002197	268	234	223	357	308	278	568	146	80	55	88	54	68	-0.024	6.98	0.05
542	80.928	84.819	0.15	0.16	1.84	71	-1.1	1.39	70	-1.9	75	0.070	99	99	1.0	-0.037109	268	234	223	357	308	278	567	146	80	55	89	54	66	-0.024	6.97	0.05
543	81.078	84.975	0.15	0.16	1.84	71	-1.17	1.38	70	-1.9	76	0.070	100	99	1.1	0.01007	267	234	223	356	308	278	567	146	80	55	89	54	67	-0.024	6.98	0.05
544	81.227	85.131	0.15	0.16	1.83	71	-1.15	1.39	70	-2	76	0.070	99	99	1.0	-0.0195	267	234	223	356	307	277	567	145	81	55	88	54	66	-0.024	6.95	0.05
545	81.376	85.287	0.15	0.16	1.82	71	-0.88	1.40	70	-1.9	75	0.070	99	99	1.0	0.000335	267	233	222	356	307	277	566	146	81	55	87	54	65	-0.024	6.97	0.05
546	81.525	85.443	0.15	0.16	1.83	70	-1.32	1.39	70	-1.8	75	0.070	99	99	1.0	-0.032226	266	233	223	356	307	277	566	145	82	55	86	54	67	-0.024	6.92	0.05
547	81.675	85.599	0.15	0.16	1.81	70	-0.98	1.39	70	-2	75	0.070	100	99	1.0	-0.002716	266	233	222	355	306	276	565	145	82	55	85	54	66	-0.023	6.95	0.05
548	81.825	85.756	0.15	0.16	1.82	70	-1	1.38	70	-1.9	75	0.070	100	100	1.0	0.00122	266	233	222	355	306	276	565	145	82	55	85	54	67	-0.024	7	0.05
549	81.974	85.912	0.15	0.16	1.84	70	-1.33	1.39	70	-2	75	0.070	99	99	1.0	-0.004272	266	233	222	355	306	276	566	145	82	55	86	54	66	-0.024	7	0.05
550	82.123	86.068	0.15	0.16	1.84	70	-0.93	1.38	70	-1.9	75	0.070	99	99	1.0	0.004333	265	233	222	355	305	276	566	145	82	55	86	54	66	-0.024	6.99	0.05
551	82.272	86.224	0.15	0.16	1.84	70	-1.32	1.39	70	-1.8	75	0.070	99	99	1.0	-0.02713	265	233	222	355	306	276	567	145	82	55	87	54	67	-0.024	7.03	0.05
552	82.421	86.381	0.15	0.16	1.84	70	-0.86	1.39	70	-2	75	0.070	99	100	1.0	0.003571	265	233	222	354	305	276	565	145	82	55	87	53	66	-0.024	7	0.05
553	82.571	86.537	0.15	0.16	1.84	70	-0.99	1.39	70	-1.9	75	0.070	100	99	1.0	-0.017914	265	233	222	354	305	276	565	145	82	55	88	53	67	-0.023	6.93	0.05
554	82.720	86.693	0.15	0.16	1.83	70	-1.16	1.39	70	-1.7	75	0.070	99	99	1.0	0.001831	264	233	222	354	305	276	564	144	82	55	88	54	67	-0.024	6.9	0.05
555	82.869	86.850	0.15	0.16	1.83	70	-0.89	1.40	70	-1.8	75	0.070	99	100	0.9	-0.028656	264	233	222	353	304	275	563	144	82	55	88	53	67	-0.024	6.9	0.05
556	83.019	87.006	0.15	0.16	1.82	70	-0.87	1.39	70	-1.9	74	0.070	100	99	0.9	-0.001831	264	233	222	353	305	275	562	144	82	55	88	53	67	-0.024	6.89	0.05
557	83.168	87.162	0.15	0.16	1.81	70	-1.25	1.39	70	-2	74	0.070	99	99	0.9	-0.01886	264	233	222	352	304	275	562	145	82	55	87	53	67	-0.024	6.85	0.05
558	83.318	87.318	0.15	0.16	1.84	70	-0.85	1.39	70	-1.9	75	0.070	100	99	0.9	-0.008606	264	233	222	352	304	275	561	144	82	55	87	53	67	-0.024	6.83	0.05
559	83.467	87.474	0.15	0.16	1.84	70	-1.31	1.39	70	-1.7	75	0.070	99	99	0.9	0.002167	263	233	222	351	303	274	561	144	82	55	87	53	67	-0.023	6.83	0.05

Wood Heater Test Data
Low Burn Emissions Data

Run: 2

Manufacturer: Kuma Stoves
Model: Aspen LE
Tracking No.: 2357
Project No.: 0123WM011E
Test Date: 26-Feb-19
Beginning Clock Time: 15:15

Total Sampling Time: 659 min
Recording Interval: 1 min
Background Sample Volume: 97.796 cubic feet

Meter Box Y Factor: 1.009 (1) 0.996 (2) 0.996 (Amb)

Barometric Pressure:	Begin	Middle	End	Average	
	28.47	28.44	28.4	28.44	0

OMNI Equipment Numbers:

PM Control Modules: 371, 372
Dilution Tunnel MW(dry): 29.00 lb/lb-mole
Dilution Tunnel MW(wet): 28.78 lb/lb-mole
Dilution Tunnel H2O: 2.00 percent
Dilution Tunnel Static: -0.110 "H2O
Tunnel Area: 0.19635 ft2
Pitot Tube Cp: 0.99

Avg. Tunnel Velocity: 18.29 ft/sec.
Initial Tunnel Flow: 192.7 scfm
Average Tunnel Flow: 194.5 scfm
Post-Test Leak Check (1): 0.000 cfm @ 9 in. Hg
Post-Test Leak Check (2): 0.000 cfm @ 10 in. Hg
Average Test Piece Fuel Moisture: 20.05 Dry Basis %

Technician Signature:

Velocity Traverse Data	Pt.1	Pt.2	Pt.3	Pt.4	Pt.5	Pt.6	Pt.7	Pt.8	Center	
Initial dP	0.068	0.072	0.072	0.070	0.066	0.068	0.076	0.070	0.070	"H2O
Temp:	96	96	96	96	95	95	95	95	96	°F

V_{strav} 18.47 ft/sec V_{scent} 18.45 ft/sec F_p 1.001

	Particulate Sampling Data														Fuel Weight (lb)		Temperature Data (°F)													Stack Gas Data		
Elapsed Time (min)	Gas Meter 1 (ft^3)	Gas Meter 2 (ft^3)	Sample Rate 1 (cfm)	Sample Rate 2 (cfm)	Orifice dH 1 ("H_2O)	Meter 1 Temp (°F)	Meter 1 Vacuum ("Hg)	Orifice dH 2 ("H_2O)	Meter 2 Temp (°F)	Meter 2 Vacuum ("Hg)	Dilution Tunnel (°F)	Dilution Tunnel Center dP	Pro. Rate 1	Pro. Rate 2	Scale Reading	Weight Change	Firebox Top	Firebox Bottom	Firebox Back	Firebox Left	Firebox Right	Avg. Stove Surface	Catalyst Exit	Stack	Filter 1	Dryer Exit 1	Filter 2	Dryer Exit 2	Ambient	Draft ("H_2O)	CO_2 (%)	CO (%)
560	83.616	87.630	0.15	0.16	1.84	70	-1.34	1.40	70	-1.9	74	0.070	99	99	0.9	-0.002167	263	233	221	351	303	274	560	144	82	55	86	53	67	-0.023	6.85	0.05
561	83.765	87.786	0.15	0.16	1.84	70	-1.29	1.39	70	-2	75	0.070	99	99	0.9	-0.016785	262	233	221	350	303	274	559	144	82	55	86	53	66	-0.024	6.79	0.05
562	83.914	87.942	0.15	0.16	1.84	70	-0.94	1.40	70	-2	74	0.070	99	99	0.9	-0.003784	262	233	221	350	303	274	558	144	82	55	86	53	67	-0.023	6.73	0.05
563	84.063	88.099	0.15	0.16	1.84	70	-0.9	1.39	70	-2	74	0.070	99	100	0.9	-0.001617	262	233	221	350	302	274	556	144	82	54	86	53	67	-0.023	6.67	0.05
564	84.213	88.255	0.15	0.16	1.83	70	-1.1	1.40	70	-1.9	74	0.070	100	99	0.9	0.001007	262	233	221	349	302	273	555	144	82	54	85	53	66	-0.023	6.63	0.05
565	84.362	88.411	0.15	0.16	1.83	70	-1.31	1.39	70	-2	74	0.070	99	99	0.8	-0.044922	261	233	221	349	302	273	554	144	82	54	85	53	65	-0.023	6.58	0.05
566	84.511	88.568	0.15	0.16	1.83	70	-1.33	1.39	70	-1.9	74	0.070	99	100	0.8	0.004059	260	233	221	348	302	273	554	143	82	54	85	53	65	-0.023	6.57	0.05
567	84.661	88.724	0.15	0.16	1.81	70	-1.26	1.39	70	-1.9	74	0.070	100	99	0.8	-0.007568	260	233	221	348	302	273	553	143	82	54	85	53	66	-0.023	6.57	0.05
568	84.810	88.880	0.15	0.16	1.83	70	-1.21	1.39	70	-1.8	74	0.070	99	99	0.8	0.001617	260	233	221	347	301	272	552	143	82	54	84	53	65	-0.023	6.62	0.05
569	84.959	89.037	0.15	0.16	1.83	70	-1.12	1.39	70	-1.8	74	0.070	99	100	0.8	-0.03421	259	233	221	347	301	272	552	143	82	54	84	53	66	-0.023	6.58	0.05
570	85.109	89.193	0.15	0.16	1.82	70	-0.86	1.39	70	-2	74	0.070	100	99	0.8	-3.1E-05	259	233	221	346	301	272	552	143	82	54	84	53	66	-0.024	6.59	0.05
571	85.257	89.349	0.15	0.16	1.84	70	-1.24	1.38	70	-2	74	0.070	99	99	0.8	-0.02774	259	233	221	346	301	272	552	143	82	54	84	53	66	-0.024	6.62	0.05
572	85.406	89.506	0.15	0.16	1.84	70	-0.91	1.40	69	-1.7	74	0.070	99	100	0.8	0.004425	258	233	221	346	300	272	552	143	82	54	84	53	67	-0.023	6.55	0.05
573	85.556	89.662	0.15	0.16	1.83	70	-0.88	1.40	69	-1.7	74	0.070	100	99	0.8	0.000244	258	233	221	345	300	271	551	143	82	54	83	53	67	-0.023	6.54	0.05
574	85.705	89.818	0.15	0.16	1.83	70	-0.96	1.39	69	-1.8	74	0.070	99	99	0.8	-0.003571	257	233	221	344	300	271	550	142	82	54	83	53	66	-0.023	6.54	0.05
575	85.854	89.974	0.15	0.16	1.83	70	-0.94	1.40	69	-1.7	74	0.070	99	99	0.7	-0.032013	257	233	221	344	300	271	550	142	82	54	83	53	65	-0.024	6.53	0.05
576	86.003	90.131	0.15	0.16	1.83	70	-1.07	1.39	69	-1.7	74	0.070	99	100	0.7	-0.002624	257	232	221	343	299	270	549	143	82	54	83	53	66	-0.023	6.5	0.05
577	86.153	90.287	0.15	0.16	1.82	70	-0.95	1.39	69	-1.9	73	0.070	100	99	0.7	-0.003143	256	232	221	343	299	270	548	142	82	54	84	53	65	-0.024	6.51	0.05
578	86.302	90.443	0.15	0.16	1.82	70	-0.84	1.39	69	-1.8	74	0.070	99	99	0.7	0.000152	256	232	221	342	298	270	547	142	83	54	85	53	66	-0.023	6.45	0.05
579	86.451	90.599	0.15	0.16	1.82	70	-1.32	1.39	69	-1.7	73	0.070	99	99	0.7	-0.013489	256	232	221	342	298	270	547	142	83	54	86	53	66	-0.024	6.45	0.05
580	86.600	90.755	0.15	0.16	1.83	70	-0.99	1.39	69	-2	73	0.070	99	99	0.7	0.000855	255	232	220	341	298	269	546	142	83	54	87	53	66	-0.023	6.43	0.05
581	86.749	90.911	0.15	0.16	1.84	70	-0.87	1.39	69	-2	73	0.070	99	99	0.7	-0.000763	255	232	220	341	297	269	545	142	83	54	87	53	65	-0.024	6.37	0.05
582	86.898	91.068	0.15	0.16	1.84	69	-1.34	1.39	69	-2	74	0.070	100	100	0.7	-0.021027	255	232	221	341	296	269	545	142	83	54	88	53	66	-0.023	6.35	0.05
583	87.047	91.224	0.15	0.16	1.84	70	-0.98	1.39	69	-1.8	73	0.070	99	99	0.7	0.002747	254	233	220	340	296	269	544	142	84	54	89	53	64	-0.023	6.32	0.05
584	87.196	91.380	0.15	0.16	1.83	70	-0.9	1.39	69	-1.7	74	0.070	99	99	0.7	-0.039032	254	233	220	340	296	269	544	142	84	54	89	53	64	-0.024	6.34	0.05
585	87.345	91.536	0.15	0.16	1.82	69	-1.33	1.39	69	-1.7	73	0.070	99	99	0.7	-0.009338	253	233	220	339	295	268	543	142	83	54	88	53	65	-0.024	6.29	0.05
586	87.495	91.692	0.15	0.16	1.82	69	-1.08	1.39	69	-1.9	73	0.070	100	99	0.7	0.000213	253	233	220	339	295	268	542	141	83	54	87	53	64	-0.024	6.24	0.05
587	87.644	91.849	0.15	0.16	1.82	69	-1.08	1.39	69	-2	73	0.070	99	100	0.7	0.0047	252	233	220	338	294	267	541	142	83	54	86	53	64	-0.024	6.21	0.05
588	87.793	92.005	0.15	0.16	1.82	69	-1.33	1.40	69	-1.8	73	0.070	99	99	0.7	-0.006439	252	233	220	338	294	267	540	141	83	54	85	53	64	-0.023	6.19	0.05
589	87.943	92.161	0.15	0.16	1.84	69	-0.85	1.40	69	-1.7	73	0.070	100	99	0.6	-0.026856	252	233	220	337	294	267	540	142	83	54	84	53	65	-0.023	6.17	0.05
590	88.092	92.317	0.15	0.16	1.84	69	-0.97	1.40	69	-1.8	73	0.070	99	99	0.6	0.000153	251	233	220	337	293	267	539	142	83	54	83	53	65	-0.023	6.15	0.05
591	88.241	92.474	0.15	0.16	1.84	69	-1.1	1.39	69	-1.9	73	0.070	99	100	0.6	-0.000305	251	233	220	336	293	267	538	142	83	54	82	53	64	-0.023	6.15	0.05
592	88.390	92.630	0.15	0.16	1.83	69	-0.84	1.39	69	-1.9	73	0.070	99	99	0.6	-0.006958	250	232	220	335	293	266	537	141	83	54	82	53	65	-0.023	6.2	0.06
593	88.539	92.786	0.15	0.16	1.84	69	-1.23	1.39	69	-1.9	73	0.070	99	99	0.6	-0.006958	250	232	220	335	292	266	536	141	83	54	83	53	65	-0.023	6.16	0.06
594	88.688	92.943	0.15	0.16	1.84	69	-0.85	1.40	69	-1.8	72	0.070	99	100	0.6	0.005005	249	232	220	334	291	265	536	141	83	54	83	53	65	-0.023	6.13	0.05

Wood Heater Test Data
Low Burn Emissions Data

Run: 2

Manufacturer: Kuma Stoves
Model: Aspen LE
Tracking No.: 2357
Project No.: 0123WM011E
Test Date: 26-Feb-19
Beginning Clock Time: 15:15

Total Sampling Time: 659 min
Recording Interval: 1 min
Background Sample Volume: 97.796 cubic feet

Meter Box Y Factor: 1.009 (1) 0.996 (2) 0.996 (Amb)

Barometric Pressure:	Begin	Middle	End	Average
	28.47	28.44	28.4	28.44 0

OMNI Equipment Numbers:

PM Control Modules: 371, 372
Dilution Tunnel MW(dry): 29.00 lb/lb-mole
Dilution Tunnel MW(wet): 28.78 lb/lb-mole
Dilution Tunnel H2O: 2.00 percent
Dilution Tunnel Static: -0.110 "H2O
Tunnel Area: 0.19635 ft2
Pitot Tube Cp: 0.99

Avg. Tunnel Velocity: 18.29 ft/sec.
Initial Tunnel Flow: 192.7 scfm
Average Tunnel Flow: 194.5 scfm
Post-Test Leak Check (1): 0.000 cfm @ 9 in. Hg
Post-Test Leak Check (2): 0.000 cfm @ 10 in. Hg
Average Test Piece Fuel Moisture: 20.05 Dry Basis %

Technician Signature:

Velocity Traverse Data	Pt.1	Pt.2	Pt.3	Pt.4	Pt.5	Pt.6	Pt.7	Pt.8	Center	
Initial dP	0.068	0.072	0.072	0.070	0.066	0.068	0.076	0.070	0.070	"H2O
Temp:	96	96	96	96	95	95	95	95	96	°F

V_{strav} 18.47 ft/sec V_{scent} 18.45 ft/sec F_p 1.001

	Particulate Sampling Data														Fuel Weight (lb)		Temperature Data (°F)													Stack Gas Data		
Elapsed Time (min)	Gas Meter 1 (ft^3)	Gas Meter 2 (ft^3)	Sample Rate 1 (cfm)	Sample Rate 2 (cfm)	Orifice dH 1 ("H_2O)	Meter 1 Temp (°F)	Meter 1 Vacuum ("Hg)	Orifice dH 2 ("H_2O)	Meter 2 Temp (°F)	Meter 2 Vacuum ("Hg)	Dilution Tunnel (°F)	Dilution Tunnel Center dP	Pro. Rate 1	Pro. Rate 2	Scale Reading	Weight Change	Firebox Top	Firebox Bottom	Firebox Back	Firebox Left	Firebox Right	Avg. Stove Surface	Catalyst Exit	Stack	Filter 1	Dryer Exit 1	Filter 2	Dryer Exit 2	Ambient	Draft ("H_2O)	CO_2 (%)	CO (%)
595	88.837	93.100	0.15	0.16	1.83	69	-0.92	1.39	69	-1.7	72	0.070	99	100	0.6	-0.033326	249	232	219	334	291	265	535	141	83	54	84	53	64	-0.023	6.1	0.06
596	88.987	93.256	0.15	0.16	1.83	69	-0.84	1.40	69	-1.9	72	0.070	100	99	0.6	-0.021179	248	232	219	333	291	265	534	140	83	54	85	53	64	-0.023	6.03	0.05
597	89.136	93.412	0.15	0.16	1.83	69	-0.85	1.39	69	-1.9	73	0.070	99	99	0.6	0	248	232	219	333	290	264	533	140	83	54	86	53	65	-0.023	6	0.05
598	89.286	93.568	0.15	0.16	1.81	69	-0.9	1.39	69	-2	72	0.070	100	99	0.6	-0.000519	248	232	219	332	290	264	531	140	83	54	87	53	64	-0.023	5.98	0.05
599	89.435	93.725	0.15	0.16	1.84	69	-0.93	1.39	69	-1.8	72	0.070	99	100	0.6	-0.002136	247	232	219	332	289	264	530	140	82	54	88	53	65	-0.023	5.96	0.06
600	89.584	93.881	0.15	0.16	1.84	69	-1.16	1.39	69	-2	72	0.070	99	99	0.5	-0.021026	246	232	219	331	289	263	528	140	82	54	89	53	65	-0.023	5.93	0.06
601	89.733	94.037	0.15	0.16	1.83	69	-0.87	1.40	69	-1.9	72	0.070	99	99	0.5	-0.001587	246	232	219	331	288	263	527	140	82	54	89	53	65	-0.023	5.93	0.06
602	89.882	94.193	0.15	0.16	1.84	69	-0.9	1.40	69	-1.8	72	0.070	99	99	0.5	0.009979	246	232	219	330	288	263	525	140	83	54	89	53	66	-0.023	5.95	0.06
603	90.031	94.349	0.15	0.16	1.84	69	-1.26	1.40	69	-1.7	72	0.070	99	99	0.5	-0.023651	245	232	218	329	288	262	525	139	83	54	89	53	66	-0.023	5.94	0.06
604	90.180	94.505	0.15	0.16	1.84	69	-1.14	1.39	69	-1.9	72	0.070	99	99	0.5	-0.003571	245	232	218	329	288	262	523	139	83	54	90	53	65	-0.023	5.92	0.06
605	90.329	94.661	0.15	0.16	1.83	69	-1.25	1.39	69	-1.7	72	0.070	99	99	0.5	-0.060364	244	232	218	328	287	262	522	139	83	54	89	53	65	-0.023	5.89	0.06
606	90.479	94.818	0.15	0.16	1.83	69	-0.91	1.39	69	-1.7	72	0.070	100	100	0.5	-0.001861	244	232	218	328	286	262	521	139	83	54	88	53	65	-0.023	5.9	0.06
607	90.628	94.974	0.15	0.16	1.83	69	-1.26	1.39	69	-1.7	73	0.070	99	99	0.5	0.01416	243	232	218	327	286	261	519	139	83	54	87	53	65	-0.023	5.89	0.06
608	90.778	95.131	0.15	0.16	1.82	69	-1.32	1.39	69	-1.8	72	0.070	100	100	0.5	-0.002472	242	232	218	327	286	261	518	139	83	54	86	53	66	-0.023	5.88	0.06
609	90.927	95.287	0.15	0.16	1.83	69	-0.88	1.40	69	-2	72	0.070	99	99	0.5	0.004761	242	232	218	326	286	261	516	138	83	54	85	53	66	-0.022	5.88	0.06
610	91.076	95.444	0.15	0.16	1.83	69	-0.9	1.39	69	-1.8	73	0.070	99	100	0.5	-0.002289	241	232	218	325	285	260	516	138	83	54	84	53	66	-0.022	5.9	0.06
611	91.225	95.600	0.15	0.16	1.83	69	-1.17	1.39	69	-1.8	73	0.070	99	99	0.5	-0.022278	241	232	218	325	285	260	514	138	83	54	83	53	66	-0.022	5.91	0.06
612	91.374	95.756	0.15	0.16	1.84	69	-1.09	1.39	69	-1.8	73	0.070	99	99	0.5	0.006745	240	231	217	324	285	259	512	138	83	54	82	53	66	-0.022	5.84	0.06
613	91.522	95.913	0.15	0.16	1.84	69	-0.87	1.40	69	-2	73	0.070	99	100	0.5	-0.004578	240	231	217	324	285	259	510	138	83	54	81	53	66	-0.022	5.8	0.06
614	91.672	96.069	0.15	0.16	1.84	69	-1.3	1.40	69	-1.9	73	0.070	100	99	0.4	-0.022766	239	231	217	323	285	259	508	137	83	54	81	53	65	-0.022	5.77	0.06
615	91.821	96.225	0.15	0.16	1.83	69	-0.91	1.39	69	-1.9	73	0.070	99	99	0.4	0.003265	238	231	217	322	284	258	506	137	83	54	82	53	66	-0.022	5.75	0.06
616	91.970	96.381	0.15	0.16	1.82	69	-0.88	1.40	68	-1.7	73	0.070	99	99	0.4	-0.025177	237	231	217	322	284	258	505	137	83	54	83	53	66	-0.022	5.72	0.06
617	92.119	96.538	0.15	0.16	1.82	69	-0.99	1.39	68	-1.7	73	0.070	99	100	0.4	0.002625	237	231	217	321	283	258	505	136	83	54	83	53	66	-0.022	5.73	0.06
618	92.268	96.694	0.15	0.16	1.82	69	-1.3	1.39	68	-2	73	0.070	99	99	0.4	0.002136	236	231	217	320	283	257	505	137	83	54	84	53	66	-0.022	5.75	0.06
619	92.417	96.851	0.15	0.16	1.81	69	-1.23	1.39	68	-1.9	73	0.070	99	100	0.4	-0.020844	236	231	217	320	283	257	505	136	83	54	85	53	67	-0.022	5.77	0.06
620	92.566	97.007	0.15	0.16	1.83	69	-0.86	1.40	68	-1.8	73	0.070	99	99	0.4	-0.001709	235	231	216	319	283	257	504	136	83	54	85	52	67	-0.022	5.7	0.06
621	92.715	97.163	0.15	0.16	1.84	69	-1.19	1.39	68	-1.9	73	0.070	99	99	0.4	-0.009491	235	231	216	318	282	256	502	136	83	54	86	52	66	-0.022	5.63	0.06
622	92.865	97.319	0.15	0.16	1.81	69	-1	1.39	68	-2	73	0.070	100	99	0.4	-0.02008	234	230	216	317	282	256	501	136	83	54	86	52	67	-0.022	5.61	0.06
623	93.013	97.476	0.15	0.16	1.84	69	-1.2	1.39	68	-2	73	0.070	99	100	0.4	0.000641	234	230	216	317	282	256	500	136	83	54	87	52	67	-0.022	5.63	0.06
624	93.162	97.632	0.15	0.16	1.84	69	-1.34	1.39	68	-1.8	73	0.070	99	99	0.4	-0.000977	233	230	216	316	281	255	499	136	83	54	86	52	66	-0.022	5.64	0.06
625	93.311	97.788	0.15	0.16	1.83	69	-0.95	1.38	68	-1.7	73	0.070	99	99	0.3	-0.016388	232	230	216	315	281	255	498	135	83	54	85	52	65	-0.022	5.61	0.06
626	93.460	97.944	0.15	0.16	1.83	69	-1.33	1.39	68	-1.8	73	0.070	99	99	0.3	0.002564	232	230	216	315	280	255	498	135	83	54	85	52	66	-0.022	5.6	0.06
627	93.609	98.100	0.15	0.16	1.82	69	-0.93	1.40	68	-1.8	73	0.070	99	99	0.3	-0.001038	232	230	216	314	280	254	497	135	84	54	84	52	66	-0.022	5.61	0.06
628	93.758	98.256	0.15	0.16	1.82	69	-0.94	1.39	68	-1.9	73	0.070	99	99	0.3	-0.049438	231	229	215	313	280	254	497	135	84	54	83	52	67	-0.022	5.59	0.06
629	93.907	98.412	0.15	0.16	1.82	68	-0.93	1.40	68	-1.8	73	0.070	100	99	0.3	0.025116	231	229	215	312	280	253	496	134	84	54	82	52	66	-0.022	5.59	0.06

Wood Heater Test Data
Low Burn Emissions Data

Run: 2

Manufacturer: Kuma Stoves
Model: Aspen LE
Tracking No.: 2357
Project No.: 0123WM011E
Test Date: 26-Feb-19
Beginning Clock Time: 15:15

Total Sampling Time: 659 min
Recording Interval: 1 min
Background Sample Volume: 97.796 cubic feet

Meter Box Y Factor: 1.009 (1) 0.996 (2) 0.996 (Amb)

Barometric Pressure:	Begin	Middle	End	Average	
	28.47	28.44	28.4	28.44	0

OMNI Equipment Numbers:

PM Control Modules: 371, 372
Dilution Tunnel MW(dry): 29.00 lb/lb-mole
Dilution Tunnel MW(wet): 28.78 lb/lb-mole
Dilution Tunnel H2O: 2.00 percent
Dilution Tunnel Static: -0.110 "H2O
Tunnel Area: 0.19635 ft2
Pitot Tube Cp: 0.99

Avg. Tunnel Velocity: 18.29 ft/sec.
Initial Tunnel Flow: 192.7 scfm
Average Tunnel Flow: 194.5 scfm
Post-Test Leak Check (1): 0.000 cfm @ 9 in. Hg
Post-Test Leak Check (2): 0.000 cfm @ 10 in. Hg
Average Test Piece Fuel Moisture: 20.05 Dry Basis %

Technician Signature:

Velocity Traverse Data	Pt.1	Pt.2	Pt.3	Pt.4	Pt.5	Pt.6	Pt.7	Pt.8	Center	
Initial dP	0.068	0.072	0.072	0.070	0.066	0.068	0.076	0.070	0.070	"H2O
Temp:	96	96	96	96	95	95	95	95	96	°F

V_{strav} 18.47 ft/sec V_{scent} 18.45 ft/sec F_p 1.001

	Particulate Sampling Data														Fuel Weight (lb)		Temperature Data (°F)													Stack Gas Data		
Elapsed Time (min)	Gas Meter 1 (ft^3)	Gas Meter 2 (ft^3)	Sample Rate 1 (cfm)	Sample Rate 2 (cfm)	Orifice dH 1 ("H_2O)	Meter 1 Temp (°F)	Meter 1 Vacuum ("Hg)	Orifice dH 2 ("H_2O)	Meter 2 Temp (°F)	Meter 2 Vacuum ("Hg)	Dilution Tunnel (°F)	Dilution Tunnel Center dP	Pro. Rate 1	Pro. Rate 2	Scale Reading	Weight Change	Firebox Top	Firebox Bottom	Firebox Back	Firebox Left	Firebox Right	Avg. Stove Surface	Catalyst Exit	Stack	Filter 1	Dryer Exit 1	Filter 2	Dryer Exit 2	Ambient	Draft ("H_2O)	CO_2 (%)	CO (%)
630	94.056	98.569	0.15	0.16	1.81	68	-1.01	1.40	68	-1.7	73	0.070	100	100	0.3	-0.013642	230	229	215	312	279	253	496	134	84	54	81	52	65	-0.021	5.59	0.06
631	94.205	98.725	0.15	0.16	1.81	68	-1.16	1.40	68	-1.9	73	0.070	100	99	0.3	-0.001648	230	229	215	311	279	253	496	134	84	54	80	52	66	-0.021	5.59	0.06
632	94.354	98.882	0.15	0.16	1.84	68	-0.86	1.39	68	-1.7	74	0.070	100	100	0.3	-0.000152	230	229	215	310	279	253	496	134	84	54	80	52	67	-0.021	5.6	0.06
633	94.503	99.038	0.15	0.16	1.81	68	-1.14	1.40	68	-1.8	74	0.070	100	100	0.3	0.003082	229	229	215	309	278	252	496	134	84	54	82	52	66	-0.021	5.59	0.06
634	94.652	99.195	0.15	0.16	1.81	68	-1.06	1.39	68	-2	74	0.070	100	100	0.3	-0.035553	229	229	215	308	278	252	495	134	84	54	84	52	67	-0.021	5.58	0.06
635	94.801	99.351	0.15	0.16	1.84	68	-1.33	1.39	68	-1.7	74	0.070	100	100	0.3	0.003723	229	229	215	307	278	252	494	134	84	54	86	52	66	-0.021	5.54	0.06
636	94.949	99.507	0.15	0.16	1.84	68	-0.95	1.39	68	-1.8	74	0.070	99	100	0.3	-0.014831	228	228	214	307	277	251	494	134	84	54	88	52	66	-0.021	5.53	0.06
637	95.098	99.663	0.15	0.16	1.83	68	-0.98	1.39	68	-2	74	0.070	100	100	0.3	0.001526	228	228	214	306	277	251	493	133	84	54	89	52	66	-0.021	5.51	0.06
638	95.247	99.819	0.15	0.16	1.83	68	-1.15	1.39	68	-1.9	74	0.070	100	100	0.3	-0.002564	227	228	214	305	277	250	493	133	84	54	90	52	67	-0.021	5.52	0.06
639	95.396	99.975	0.15	0.16	1.82	68	-0.89	1.38	68	-1.7	74	0.070	100	100	0.3	-0.00354	227	228	214	304	277	250	494	133	84	54	92	52	65	-0.021	5.54	0.06
640	95.545	100.131	0.15	0.16	1.82	68	-1.15	1.39	68	-1.8	74	0.070	100	100	0.2	-0.031555	227	228	214	303	277	250	495	133	84	54	91	52	64	-0.021	5.55	0.06
641	95.694	100.287	0.15	0.16	1.82	68	-0.97	1.40	68	-1.9	74	0.070	100	100	0.2	-0.02948	227	228	213	302	276	249	496	133	84	54	86	52	64	-0.021	5.58	0.06
642	95.843	100.443	0.15	0.16	1.81	68	-0.84	1.40	68	-2	74	0.070	100	100	0.2	-0.003143	227	228	213	301	276	249	495	132	84	54	80	52	65	-0.021	5.57	0.06
643	95.992	100.599	0.15	0.16	1.83	68	-0.84	1.40	68	-1.7	74	0.070	100	100	0.2	0.000671	227	228	213	300	275	249	496	132	84	54	77	52	65	-0.021	5.54	0.06
644	96.141	100.755	0.15	0.16	1.82	68	-1.07	1.40	68	-1.8	74	0.070	100	100	0.2	-0.016846	227	228	213	300	275	249	495	132	84	54	75	52	65	-0.021	5.5	0.06
645	96.290	100.912	0.15	0.16	1.83	68	-0.89	1.39	68	-2	74	0.070	100	100	0.2	0.000824	226	228	213	299	275	248	494	132	85	54	74	52	65	-0.021	5.43	0.06
646	96.439	101.068	0.15	0.16	1.84	68	-1.3	1.40	68	-2	74	0.070	100	100	0.2	-0.002472	226	228	213	298	275	248	494	132	85	54	76	52	65	-0.021	5.42	0.06
647	96.587	101.225	0.15	0.16	1.83	68	-1.13	1.39	68	-2	74	0.070	99	100	0.2	0.002655	226	228	212	297	275	248	493	132	85	54	79	52	66	-0.021	5.41	0.06
648	96.736	101.380	0.15	0.16	1.84	68	-0.94	1.39	68	-1.9	74	0.070	100	99	0.2	-0.000335	226	228	212	296	274	247	493	132	85	54	83	52	67	-0.021	5.4	0.06
649	96.885	101.537	0.15	0.16	1.84	68	-0.84	1.38	68	-1.9	74	0.070	100	100	0.2	-0.006226	225	227	212	295	274	247	492	132	85	54	87	52	68	-0.021	5.4	0.06
650	97.034	101.692	0.15	0.15	1.82	68	-0.88	1.38	68	-1.7	74	0.070	100	99	0.2	-0.004303	225	227	212	294	274	246	492	132	85	54	90	52	68	-0.021	5.38	0.06
651	97.183	101.848	0.15	0.16	1.82	68	-1.32	1.38	68	-1.9	74	0.070	100	100	0.2	-0.017609	225	227	212	294	274	246	491	132	85	54	93	52	68	-0.021	5.35	0.06
652	97.332	102.004	0.15	0.16	1.82	68	-0.91	1.38	68	-1.8	74	0.070	100	100	0.1	-0.027313	225	227	212	293	273	246	492	133	85	54	97	52	68	-0.021	5.35	0.07
653	97.481	102.160	0.15	0.16	1.81	68	-0.96	1.38	68	-1.9	75	0.070	100	100	0.1	0.002716	224	227	212	292	273	246	491	132	85	54	98	52	67	-0.020	5.63	0.08
654	97.630	102.315	0.15	0.16	1.81	68	-1.21	1.39	68	-2	75	0.070	100	99	0.1	-0.001556	224	227	212	291	273	245	489	132	85	54	98	52	66	-0.020	5.57	0.07
655	97.778	102.471	0.15	0.16	1.81	68	-0.88	1.38	68	-1.7	75	0.070	99	100	0.1	-0.022797	224	227	212	290	273	245	485	132	85	54	94	52	66	-0.021	5.5	0.07
656	97.927	102.627	0.15	0.16	1.83	68	-0.9	1.38	68	-2	75	0.070	100	100	0.1	-0.010528	223	226	211	289	274	245	482	131	85	54	87	52	67	-0.021	5.41	0.06
657	98.076	102.783	0.15	0.16	1.80	68	-1.23	1.38	68	-1.8	75	0.070	100	100	0.1	-0.000336	223	226	211	288	274	244	480	131	85	54	83	52	67	-0.021	5.38	0.07
658	98.224	102.939	0.15	0.16	1.81	68	-1.06	1.39	68	-1.8	75	0.070	99	100	0.1	0.003143	223	226	211	287	273	244	479	130	85	54	83	52	68	-0.020	5.37	0.06
659	98.373	103.095	0.15	0.16	1.84	68	-1.13	1.38	68	-1.8	75	0.070	100	100	0.0	-0.093707	222	226	210	286	273	243	479	131	85	54	84	52	68	-0.020	5.35	0.07
Avg/Tot	98.373	103.095	0.15	0.16	1.83	73		1.39	73		85	0.070	100	100								135.6				57	84	56	71	-0.033		

Wood Heater Lab Data

Manufacturer:	Kuma Stoves	Equipment Numbers:	
Model:	Aspen LE		
Tracking No.:	2357		
Project No.:	0123WM011E		
Run #:	2		
Date:	2/26/19		

TRAIN 1 (First Hour emissions)

Sample Component	Reagent	Filter, Probe or Dish #	Weights		
			Final, mg	Tare, mg	Particulate, mg
B. Front filter catch	Filter	T132S	88.7	87.9	0.8
C. Rear filter catch	Filter				0.0
D. Probe catch*	Probe				0.0
E. Filter seals catch*	Seals				0.0

Sub-Total | Total Particulate, mg: | 0.8

TRAIN 1 (Post First Hour Change-out)

Sample Component	Reagent	Filter, Probe or Dish #	Weights		
			Final, mg	Tare, mg	Particulate, mg
B. Front filter catch	Filter	T127AP	168.8	167.6	1.2
C. Rear filter catch	Filter				0.0
D. Probe catch*	Probe	23	114076.9	114075.9	1.0
E. Filter seals catch*	Seals	R729	3402.1	3402.2	0.0

Sub-Total | Total Particulate, mg: | 2.2

Train 1 Aggregate | Total Particulate, mg: | **3.0**

TRAIN 2

Sample Component	Reagent	Filter, Probe or Dish #	Weights		
			Final, mg	Tare, mg	Particulate, mg
A. Front filter catch	Filter	T127BP	182.9	180.3	2.6
B. Rear filter catch	Filter				0.0
C. Probe catch*	Probe	31	114367.4	114366.8	0.6
D. Filter seals catch*	Seals	R730	3324.9	3324.9	0.0

Total Particulate, mg: | **3.2**

AMBIENT

Sample Component	Reagent	Filter # or Probe #	Weights		
			Final, mg	Tare, mg	Particulate, mg
A. Front filter catch*	Filter	D664	121.5	121.5	0.0

Total Particulate, mg: | **0.0**

*Particulate catch that results in a negative number, is assumed to be zero for probes and seals, negative numbers for filters are assumed to be part of the seal weight.

Component	Equations:
A. Front filter catch	Final (mg) - Tare (mg) = Particulate, mg
B. Rear filter catch	Final (mg) - Tare (mg) = Particulate, mg
C. Probe catch	Final (mg) - Tare (mg) = Particulate, mg

Technician Signature: 

Wood Heater Test Results

Manufacturer: Kuma Stoves
Model: Aspen LE
Project No.: 0123WM011E
Tracking No.: 2357
Run: 2
Test Date: 02/26/19

Burn Rate	**0.68 kg/hr dry**
Average Tunnel Temperature	85 degrees Fahrenheit
Average Gas Velocity in Dilution Tunnel - vs	18.29 feet/second
Average Gas Flow Rate in Dilution Tunnel - Qsd	11668.8 dscf/hour
Average Delta p	0.070 inches H20
Total Time of Test	659 minutes

	AMBIENT	SAMPLE TRAIN 1	SAMPLE TRAIN 2	FIRST HOUR FILTER (TRAIN 1)
Total Sample Volume - Vm	97.796 cubic feet	98.373 cubic feet	103.095 cubic feet	8.850 cubic feet
Average Gas Meter Temperature	71 degrees Fahrenheit	73 degrees Fahrenheit	73 degrees Fahrenheit	75 degrees Fahrenheit
Total Sample Volume (Standard Conditions) - Vmstd	92.054 dscf	93.849 dscf	97.057 dscf	8.413 dscf
Total Particulates - m_n	0 mg	3 mg	3.2 mg	0.8 mg
Particulate Concentration (dry-standard) - C_r/C_s	0.000000 grams/dscf	0.00003 grams/dscf	0.00003 grams/dscf	0.00010 grams/dscf
Total Particulate Emissions - E_T	0.00 grams	4.10 grams	4.23 grams	1.11 grams
Particulate Emission Rate	0.00 grams/hour	0.37 grams/hour	0.38 grams/hour	1.11 grams/hour
Emissions Factor		0.55 g/kg	0.56 g/kg	0.57 g/kg
Difference from Average Total Particulate Emissions		0.06 grams	0.06 grams	
	Dual Train Comparison Results Are Acceptable			

FINAL AVERAGE RESULTS

Complete Test Run	
Total Particulate Emissions - E_T	4.16 grams
Particulate Emission Rate	**0.38 grams/hour**
Emissions Factor	0.56 grams/kg
First Hour Emissions	
Total Particulate Emissions - E_T	1.11 grams
Particulate Emission Rate	1.11 grams/hour
Emissions Factor	0.57 grams/kg
7.5% of Average Total Particulate Emissions	0.31 grams

QUALITY CHECKS

Filter Temps < 90 °F	NOT ACCEPTABLE
Filter Face Velocity (47 mm)	OK
Dryer Exit Temp < 80F	OK
Leakage Rate	OK
Ambient Temp (55-90°F)	OK
Negative Probe Weight Eval.	OK
Pro-Rate Variation	OK

Technician Signature: 

Wood Heater Efficiency Results - CSA B415.1

Manufacturer: Kuma Stoves
Model: Aspen LE
Date: 02/26/19
Run: 2
Control #: 0123WM011E
Test Duration: 659
Output Category: I

Technician Signature: 

Test Results in Accordance with CSA B415.1-09

	HHV Basis	LHV Basis
Overall Efficiency	82.6%	89.2%
Combustion Efficiency	99.5%	99.5%
Heat Transfer Efficiency	83%	89.7%

Output Rate (kJ/h)	11,189	10,614	**(Btu/h)**
Burn Rate (kg/h)	0.68	1.51	**(lb/h)**
Input (kJ/h)	13,552	12,856	**(Btu/h)**

Test Load Weight (dry kg)	7.51	16.56	**dry lb**
MC wet (%)	16.69906148		
MC dry (%)	20.05		
Particulate (g)	4.16		
CO (g)	73		
Test Duration (h)	10.98		

Emissions	Particulate	CO
g/MJ Output	0.03	0.59
g/kg Dry Fuel	0.55	9.73
g/h	0.38	6.66
lb/MM Btu Output	0.08	1.38

Air/Fuel Ratio (A/F)	12.98

VERSION: **2.2** **12/14/2009**

Adjunct to ASTM E XXXX Wood Heater Cordwood Test Method - May 10, 2017 Version

Cordwood Fuel Load Calculators - 12 lb/ft^3 Nominal Load Density

Core 45-65% of Total Load Weight, Remainder 35-55% of Total Load Weight

Values to be input manually

THIS DOCUMENT IS NOT AN ASTM STANDARD; IT IS UNDER CONSIDERATION WITHIN AN ASTM TECHNICAL COMMITTEE BUT HAS NOT RECEIVED ALL APPROVALS REQUIRED TO BECOME AN ASTM STANDARD. IT SHALL NOT BE REPRODUCED OR CIRCULATED OR QUOTED, IN WHOLE OR IN PART, OUTSIDE OF ASTM COMMITTEE ACTIVITIES EXCEPT WITH THE APPROVAL OF THE CHAIRMAN OF THE COMMITTEE HAVING JURISDICTION AND THE PRESIDENT OF THE SOCIETY. *COPYRIGHT ASTM, 100 BARR HARBOR DRIVE, WEST CONSHOHOCKEN, PA 19428. ALL RIGHTS RESERVED.*

For Usable Firebox Volumes up to 3.0 ft^3 - Low and Medium Fire

Nominal Required Load Density (wet basis)	12	lb/ft^3				
Usable Firebox Volume	1.74	ft^3				
Total Nom. Load Wt. Target	20.88	lb				
Total Load Wt. Allowable Range	19.84	to	21.92	lb		
Core Target Wt. Allowable Range	9.396	to	13.57	lb		
Remainder Load Wt. Allowable Range	7.31	to	11.48	lb		
						Mid-Point
Core Load Fuel Pc. Wt. Allowable Range	3.13	to	5.22	lb		4.18
Remainder Load Pc. Wt. Allowable Range	2.09	to	6.26	lb		4.18
	Pc. #					
Core Load Piece Wt. Actual	1	4.13	lb	In Range		
	2	3.29	lb	In Range		
	3	5.06	lb	In Range		
Core Load Total. Wt. Actual		12.47	lb	In Range		
	Pc. #					
Remainder Load Piece Wt.	1	5.25	lb	In Range		
(2 or 3 Pcs.)	2	2.16	lb	In Range		
	3		lb	NA		
Remainder Load Piece Weight Ratio - Small/Large		41%		In Range		≤ 67%
Remainder Load Tot. Wt. Act		7.41	lb	In Range		
Total Load Wt. Actual		19.88	lb	In Range		
Core % of Total Wt.		63%		In Range		45-65%
Remainder % of Total Wt.		37%		In Range		35-55%
Actual Load % of Nominal Target		95%		In Range		95-105%
Actual Fuel Load Density		11.4	lb/ft^3			
Allowable Charcoal Bed Wt. Range (lb)	2.0	to	3.9			Mid-Point
Actual Charcoal Bed Wt.		2.5	lb	In Range		3.0
Actual Fuel Load Ending Wt.		0.0	lb	Valid Test		≥ 90%
Total Wt. of Fuel Burned During Test Run lb.		19.9	lb			

Fuel Piece Moisture Reading (%-dry basis)

1	2	3	Ave.		Pc. Wt. Dry Basis			
18.8	18.6	23.8	20.4	In Range	3.43	lb	1.55	kg
17.7	19.2	22.6	19.8	In Range	2.74	lb	1.24	kg
18.9	19.4	23.3	20.5	In Range	4.20	lb	1.90	kg
18.7	18.8	23	20.2	In Range	4.37	lb	1.98	kg
17.1	18.6	22.2	19.3	In Range	1.81	lb	0.82	kg
			NA	NA	NA	lb	NA	kg

Total Load Ave. MC % (dry basis)	20.2	In Range			
Total Load Ave. MC % (wet basis)	16.8				
Total Test Load Weight (dry basis) →			16.55	lb	7.51 kg
Total Fuel Weight Burned During Test Run (dry basis)			16.5	lb	7.51 kg

OMNI-Test Laboratories, Inc.

Wood Heater Run Sheets

Client: Kuma Stoves Project Number: 0123WM011E Run Number: 2
Model: Aspen LE Tracking Number: 2357 Date: 2/26/19
Test Crew: B Dan
OMNI Equipment ID numbers:

Wood Heater Run Notes

Air Control Settings

Primary:

5/16" open, Air control fully closed.

Secondary: fixed

Tertiary/Pilot: n/a

Fan: on Low

Preburn Notes

Time	Notes
	Burned high burn fuel down to 2.5 Lbs and loaded low Burn.

Test Notes

Sketch test fuel configuration:

See photo

Start up procedures & Timeline:

Bypass: closed by 72 seconds
Fuel loaded by: 72 seconds
Door closed at: 72 seconds
Primary air: fully open on for 15 min, Then set to full closed 5/16 open

Notes: Fan on Low at 30 min

Time	Notes
60	Changed front filter to from A.

Technician Signature: B D

Date: 4/3/19

OMNI-Test Laboratories, Inc.

Wood Heater Run Sheets

Client: Kuma Stoves Project Number: 0123WM011E Run Number: 2
Model: Aspen LE Tracking Number: 2357 Date: 2/26/15
Test Crew: DD Acs
OMNI Equipment ID numbers:

Wood Heater Supplemental Data

Start Time: 1515 Booth #: N/A
Stop Time: 0214

Stack Gas Leak Check:
Initial: good Final: good

Sample Train Leak Check:
A: 0.0 @ 9 "Hg
B: 0.0 @ 10 "Hg

Calibrations: Span Gas CO_2: 12.40 CO: 2.48

	Pre Test		Post Test	
	Zero	Span	Zero	Span
Time	1455	1455 ~~12.41~~	0218	0218
CO_2	0.00	12.41	0.00	12.37
CO	0.000	2.48	-0.001	2.492

Air Velocity (ft/min): Initial: <50 Final: <50
Scale Audit (lbs): Initial: 10.0 Final: 10.0
Pitot Tube Leak Test: Initial: good Final: good
Stack Diameter (in): 6"
Induced Draft: 0.0
% Smoke Capture: 100%
Flue Pipe Cleaned Prior to First Test in Series:
Date: 2/25/19 Initials: DC

	Initial	Middle	Ending
P_b (in/Hg)	28.47		28.40
RH (%)	20%		16
Ambient (°F)	73		68

Background Filter Volume: 97.796

Tunnel Traverse		
Microtector Reading	dP (in H_2O)	T(°F)
	.068	96
	.072	96
	.072	96
	.070	96
	.066	95
	.068	95
	.076	95
	.070	95
Center:		
	.070	96

Tunnel Static Pressure (in H_2O):	
Beginning of Test	End of Test
-.110	-.110

Technician Signature: DD Date: 4/3/15

Run 3

Non-Particulate Sampling High Burn

Wood Heater Test Data
Hign Burn Emissions Data

Run: 3

Manufacturer: Kuma Stoves
Model: Aspen LE
Tracking No.: 2357
Project No.: 0123WM011E
Test Date: 28-Feb-19
Beginning Clock Time: 11:07

Total Sampling Time: 132 min
Recording Interval: 1 min
Background Sample Volume: _____ cubic feet

Meter Box Y Factor: 1.009 (1) 0.996 (2) 0.998 (Amb)

Barometric Pressure: Begin _____ Middle _____ End _____ Average 0

OMNI Equipment Numbers: _____

PM Control Modules: 371, 372
Dilution Tunnel MW(dry): 29.00 lb/lb-mole
Dilution Tunnel MW(wet): 28.78 lb/lb-mole
Dilution Tunnel H2O: 2.00 percent
Dilution Tunnel Static: -0.109 "H2O
Tunnel Area: 0.19635 ft2
Pitot Tube Cp: 0.99

Avg. Tunnel Velocity: #DIV/0! ft/sec.
Initial Tunnel Flow: #DIV/0! scfm
Average Tunnel Flow: #DIV/0! scfm
Post-Test Leak Check (1): _____ cfm @ _____ in. Hg
Post-Test Leak Check (2): _____ cfm @ _____ in. Hg
Average Test Piece Fuel Moisture: 18.08 Dry Basis %

Technician Signature: 

Velocity Traverse Data

	Pt.1	Pt.2	Pt.3	Pt.4	Pt.5	Pt.6	Pt.7	Pt.8	Center	
Initial dP										"H2O
Temp:										°F

V_{strav} _____ ft/sec V_{scent} _____ ft/sec F_p _____

	Particulate Sampling Data														Fuel Weight (lb)		Temperature Data (°F)													Stack Gas Data		
Elapsed Time (min)	Gas Meter 1 (ft^3)	Gas Meter 2 (ft^3)	Sample Rate 1 (cfm)	Sample Rate 2 (cfm)	Orifice dH 1 ("H_2O)	Meter 1 Temp (°F)	Meter 1 Vacuum ("Hg)	Orifice dH 2 ("H_2O)	Meter 2 Temp (°F)	Meter 2 Vacuum ("Hg)	Dilution Tunnel (°F)	Dilution Tunnel Center dP	Pro. Rate 1	Pro. Rate 2	Scale Reading	Weight Change	Firebox Top	Firebox Bottom	Firebox Back	Firebox Left	Firebox Right	Avg. Stove Surface	Catalyst Exit	Stack	Filter 1	Dryer Exit 1	Filter 2	Dryer Exit 2	Ambient	Draft ("H_2O)	CO_2 (%)	CO (%)
0															8.4		69	66	66	67	67	67	70	73					68	0.000		
1															8.4		70	66	66	67	67	67	93	91					68	-0.006		
2															8.5		72	66	66	67	67	68	97	88					67	-0.004		
3															8.4		74	66	66	67	67	68	102	87					68	-0.005		
4															8.3		76	67	66	68	67	69	121	92					68	-0.010		
5															8.3		81	67	65	69	68	70	143	112					67	-0.018		
6															8.2		90	67	65	70	69	72	187	144					68	-0.029		
7															8.1		103	68	65	71	70	75	292	196					67	-0.041		
8															8.0		121	69	65	74	71	80	442	244					68	-0.050		
9															7.9		134	70	65	77	73	84	528	295					68	-0.056		
10															7.8		144	72	65	80	75	87	521	327					68	-0.059		
11															7.7		157	74	65	84	78	92	506	349					68	-0.062		
12															7.6		174	77	65	88	81	97	511	363					68	-0.064		
13															7.5		190	80	65	92	84	102	528	384					68	-0.067		
14															7.3		206	84	65	97	87	108	561	409					68	-0.070		
15															7.2		223	88	65	102	91	114	613	426					68	-0.072		
16															7.0		248	93	66	108	95	122	881	398					69	-0.068		
17															6.8		283	99	66	114	100	132	980	413					69	-0.070		
18															6.7		318	106	66	120	104	143	1027	432					69	-0.072		
19															6.5		354	113	66	127	110	154	1061	446					70	-0.073		
20															6.4		389	121	66	134	115	165	1113	456					69	-0.076		
21															6.2		426	129	67	141	120	177	1151	467					69	-0.075		
22															6.0		458	137	67	148	126	187	1146	475					69	-0.075		
23															5.8		485	145	67	155	131	197	1098	480					68	-0.075		
24															5.7		508	154	68	162	137	206	1081	484					68	-0.076		
25															5.6		528	162	68	168	143	214	1082	491					68	-0.077		
26															5.4		545	170	69	175	148	221	1064	490					68	-0.076		
27															5.2		559	177	70	182	154	228	1044	489					69	-0.076		
28															5.1		567	185	71	189	159	234	1005	487					68	-0.076		
29															5.0		576	191	72	196	164	240	1014	488					68	-0.075		
30															4.8		584	197	73	202	169	245	1054	489					68	-0.076		
31															4.6		593	203	75	208	174	251	1061	491					69	-0.076		
32															4.5		600	209	77	215	179	256	1044	490					69	-0.076		
33															4.4		604	214	79	221	184	260	1033	488					69	-0.076		
34															4.2		610	219	82	228	189	266	1055	487					69	-0.075		

Wood Heater Test Data
Hign Burn Emissions Data

Run: 3

Manufacturer: Kuma Stoves
Model: Aspen LE
Tracking No.: 2357
Project No.: 0123WM011E
Test Date: 28-Feb-19
Beginning Clock Time: 11:07

Total Sampling Time: 132 min
Recording Interval: 1 min
Background Sample Volume: _____ cubic feet

Meter Box Y Factor: 1.009 (1) 0.996 (2) 0.998 (Amb)

Barometric Pressure: Begin _____ Middle _____ End _____ Average 0

OMNI Equipment Numbers: _____

PM Control Modules: 371, 372
Dilution Tunnel MW(dry): 29.00 lb/lb-mole
Dilution Tunnel MW(wet): 28.78 lb/lb-mole
Dilution Tunnel H2O: 2.00 percent
Dilution Tunnel Static: -0.109 "H2O
Tunnel Area: 0.19635 ft2
Pitot Tube Cp: 0.99

Avg. Tunnel Velocity: #DIV/0! ft/sec.
Initial Tunnel Flow: #DIV/0! scfm
Average Tunnel Flow: #DIV/0! scfm
Post-Test Leak Check (1): _____ cfm @ _____ in. Hg
Post-Test Leak Check (2): _____ cfm @ _____ in. Hg
Average Test Piece Fuel Moisture: 18.08 Dry Basis %

Technician Signature: _____

Velocity Traverse Data									
	Pt.1	Pt.2	Pt.3	Pt.4	Pt.5	Pt.6	Pt.7	Pt.8	Center
Initial dP									"H2O
Temp:									°F

V_{strav} _____ ft/sec V_{scent} _____ ft/sec F_p _____

	Particulate Sampling Data														Fuel Weight (lb)		Temperature Data (°F)												Stack Gas Data		
Elapsed Time (min)	Gas Meter 1 (ft^3)	Gas Meter 2 (ft^3)	Sample Rate 1 (cfm)	Sample Rate 2 (cfm)	Orifice dH 1 ("H_2O)	Meter 1 Temp (°F)	Meter 1 Vacuum ("Hg)	Orifice dH 2 ("H_2O)	Meter 2 Temp (°F)	Meter 2 Vacuum ("Hg)	Dilution Tunnel (°F)	Dilution Tunnel Center dP	Pro. Rate 1	Pro. Rate 2	Scale Reading	Weight Change	Firebox Top	Firebox Bottom	Firebox Back	Firebox Left	Firebox Right	Avg. Stove Surface	Catalyst Exit	Stack	Filter 1	Dryer Exit 1	Filter 2	Dryer Exit 2	Ambient	Draft ("H_2O)	CO_2 (%)	CO (%)
35															4.0		616	224	84	235	194	271	1067	487					69	-0.075		
36															3.9		623	228	87	242	199	276	1094	489					68	-0.076		
37															3.8		629	232	91	249	205	281	1088	492					69	-0.076		
38															3.6		637	237	94	256	210	287	1092	494					69	-0.076		
39															3.5		643	242	98	264	216	293	1087	493					69	-0.074		
40															3.3		648	246	102	271	221	298	1083	489					69	-0.074		
41															3.2		650	251	106	280	227	303	1051	486					69	-0.074		
42															3.1		649	256	110	288	233	307	1024	483					70	-0.073		
43															3.0		648	261	114	296	240	312	1019	478					70	-0.073		
44															2.8		647	266	119	304	246	316	1014	476					70	-0.073		
45															2.7		643	272	123	312	252	320	1000	473					70	-0.072		
46															2.6		641	277	128	320	259	325	993	467					70	-0.071		
47															2.6		636	283	133	328	266	329	973	460					70	-0.070		
48															2.5		631	288	139	336	272	333	958	456					70	-0.069		
49															2.4		625	294	144	344	279	337	944	452					71	-0.069		
50															2.3		620	299	149	351	285	341	927	446					71	-0.069		
51															2.2		614	305	153	359	292	345	910	441					71	-0.069		
52															2.2		608	310	158	366	299	348	894	436					71	-0.068		
53															2.1		602	316	162	372	305	351	892	434					70	-0.067		
54															2.0		595	321	166	378	311	354	892	431					71	-0.067		
55															2.0		589	327	170	384	316	357	885	426					71	-0.066		
56															2.0		583	332	173	390	322	360	879	424					70	-0.067		
57															18.8		572	337	182	395	325	362	594	506					70	-0.073		
58															18.4		557	343	183	400	330	363	757	420					70	-0.073		
59															18.3		557	348	186	404	335	366	948	440					70	-0.076		
60															18.2		557	352	189	408	338	369	946	448					70	-0.076		
61															18.0		559	356	193	410	341	372	991	454					70	-0.078		
62															17.9		543	354	196	411	341	369	1045	463					71	-0.079		
63															17.7		539	348	200	412	343	368	1050	468					71	-0.079		
64															17.5		538	342	203	412	344	368	1081	468					71	-0.078		
65															17.3		539	338	206	412	345	368	1092	470					72	-0.080		
66															17.2		541	333	208	412	347	368	1104	472					71	-0.078		
67															17.0		542	329	210	412	348	368	1106	472					71	-0.079		
68															16.8		544	326	212	412	349	369	1108	469					71	-0.078		
69															16.7		545	322	213	412	351	369	1099	468					71	-0.079		

Wood Heater Test Data
Hign Burn Emissions Data

Run: 3

Manufacturer: Kuma Stoves
Model: Aspen LE
Tracking No.: 2357
Project No.: 0123WM011E
Test Date: 28-Feb-19
Beginning Clock Time: 11:07

Total Sampling Time: 132 min
Recording Interval: 1 min
Background Sample Volume: _____ cubic feet

Meter Box Y Factor: 1.009 (1) 0.996 (2) 0.998 (Amb)

Barometric Pressure: Begin _____ Middle _____ End _____ Average 0

OMNI Equipment Numbers: _____

PM Control Modules: 371, 372
Dilution Tunnel MW(dry): 29.00 lb/lb-mole
Dilution Tunnel MW(wet): 28.78 lb/lb-mole
Dilution Tunnel H2O: 2.00 percent
Dilution Tunnel Static: -0.109 "H2O
Tunnel Area: 0.19635 ft2
Pitot Tube Cp: 0.99

Avg. Tunnel Velocity: #DIV/0! ft/sec.
Initial Tunnel Flow: #DIV/0! scfm
Average Tunnel Flow: #DIV/0! scfm
Post-Test Leak Check (1): _____ cfm @ _____ in. Hg
Post-Test Leak Check (2): _____ cfm @ _____ in. Hg
Average Test Piece Fuel Moisture: 18.08 Dry Basis %

Technician Signature: 

Velocity Traverse Data

	Pt.1	Pt.2	Pt.3	Pt.4	Pt.5	Pt.6	Pt.7	Pt.8	Center	
Initial dP										"H2O
Temp:										°F

V_{strav} _____ ft/sec V_{scent} _____ ft/sec F_p _____

	Particulate Sampling Data														Fuel Weight (lb)		Temperature Data (°F)													Stack Gas Data		
Elapsed Time (min)	Gas Meter 1 (ft^3)	Gas Meter 2 (ft^3)	Sample Rate 1 (cfm)	Sample Rate 2 (cfm)	Orifice dH 1 ("H_2O)	Meter 1 Temp (°F)	Meter 1 Vacuum ("Hg)	Orifice dH 2 ("H_2O)	Meter 2 Temp (°F)	Meter 2 Vacuum ("Hg)	Dilution Tunnel (°F)	Dilution Tunnel Center dP	Pro. Rate 1	Pro. Rate 2	Scale Reading	Weight Change	Firebox Top	Firebox Bottom	Firebox Back	Firebox Left	Firebox Right	Avg. Stove Surface	Catalyst Exit	Stack	Filter 1	Dryer Exit 1	Filter 2	Dryer Exit 2	Ambient	Draft ("H_2O)	CO_2 (%)	CO (%)
70															16.5		545	320	215	413	352	369	1087	467					71	-0.079		
71															16.3		546	317	216	413	353	369	1086	468					71	-0.079		
72															16.2		547	315	217	413	355	369	1087	468					71	-0.078		
73															16.0		547	313	218	414	357	370	1076	466					71	-0.078		
74															15.8		546	312	218	415	359	370	1065	463					71	-0.078		
75															15.7		546	311	219	416	361	371	1064	463					71	-0.079		
76															15.5		546	311	219	417	363	371	1061	462					71	-0.078		
77															15.3		545	311	220	418	365	372	1056	460					72	-0.078		
78															15.2		543	311	220	419	367	372	1045	457					71	-0.079		
79															15.0		541	311	220	420	369	372	1035	457					71	-0.078		
80															14.9		538	311	221	422	371	373	1024	454					72	-0.076		
81															14.7		535	312	221	423	373	373	1021	454					72	-0.078		
82															14.6		533	312	221	424	375	373	1022	452					71	-0.077		
83															14.4		531	313	222	425	377	374	1017	451					71	-0.076		
84															14.2		529	314	222	427	379	374	1015	450					70	-0.077		
85															14.1		527	314	222	428	381	374	1011	448					71	-0.076		
86															14.0		525	315	223	429	383	375	1010	446					71	-0.075		
87															13.8		524	316	224	430	384	376	1018	447					71	-0.076		
88															13.6		524	317	224	430	386	376	1033	449					71	-0.077		
89															13.4		525	318	225	431	388	377	1042	452					72	-0.076		
90															13.3		527	319	226	431	391	379	1045	453					72	-0.076		
91															13.1		529	320	227	432	392	380	1043	452					72	-0.077		
92															13.0		531	321	228	432	394	381	1041	451					72	-0.076		
93															12.8		532	321	229	433	397	382	1039	452					72	-0.077		
94															12.7		534	322	230	433	399	384	1037	452					72	-0.076		
95															12.5		534	323	231	434	401	385	1027	450					72	-0.076		
96															12.4		534	324	233	434	403	386	1018	448					71	-0.076		
97															12.2		534	325	234	435	405	387	1011	448					72	-0.076		
98															12.1		533	326	236	435	406	387	1007	446					71	-0.076		
99															11.9		532	328	237	436	407	388	1001	444					72	-0.075		
100															11.8		531	329	239	437	409	389	1000	442					72	-0.075		
101															11.7		529	331	241	437	411	390	1004	442					73	-0.075		
102															11.5		529	333	243	438	412	391	1008	442					73	-0.075		
103															11.4		528	335	245	439	412	392	1004	444					72	-0.075		
104															11.2		528	338	247	439	413	393	1005	443					73	-0.075		

Wood Heater Test Data
Hign Burn Emissions Data

Run: 3

Manufacturer: Kuma Stoves
Model: Aspen LE
Tracking No.: 2357
Project No.: 0123WM011E
Test Date: 28-Feb-19
Beginning Clock Time: 11:07

Total Sampling Time: 132 min
Recording Interval: 1 min
Background Sample Volume: _____ cubic feet

Meter Box Y Factor: 1.009 (1) 0.996 (2) 0.998 (Amb)

Barometric Pressure: Begin _____ Middle _____ End _____ Average 0

OMNI Equipment Numbers: _____

PM Control Modules: 371, 372
Dilution Tunnel MW(dry): 29.00 lb/lb-mole
Dilution Tunnel MW(wet): 28.78 lb/lb-mole
Dilution Tunnel H2O: 2.00 percent
Dilution Tunnel Static: -0.109 "H2O
Tunnel Area: 0.19635 ft2
Pitot Tube Cp: 0.99

Avg. Tunnel Velocity: #DIV/0! ft/sec.
Initial Tunnel Flow: #DIV/0! scfm
Average Tunnel Flow: #DIV/0! scfm
Post-Test Leak Check (1): _____ cfm @ _____ in. Hg
Post-Test Leak Check (2): _____ cfm @ _____ in. Hg
Average Test Piece Fuel Moisture: 18.08 Dry Basis %

Technician Signature: _____

Velocity Traverse Data										
	Pt.1	Pt.2	Pt.3	Pt.4	Pt.5	Pt.6	Pt.7	Pt.8	Center	
Initial dP										"H2O
Temp:										°F

V_{strav} _____ ft/sec V_{scent} _____ ft/sec F_p _____

	Particulate Sampling Data														Fuel Weight (lb)		Temperature Data (°F)													Stack Gas Data		
Elapsed Time (min)	Gas Meter 1 (ft^3)	Gas Meter 2 (ft^3)	Sample Rate 1 (cfm)	Sample Rate 2 (cfm)	Orifice dH 1 ("H_2O)	Meter 1 Temp (°F)	Meter 1 Vacuum ("Hg)	Orifice dH 2 ("H_2O)	Meter 2 Temp (°F)	Meter 2 Vacuum ("Hg)	Dilution Tunnel (°F)	Dilution Tunnel Center dP	Pro. Rate 1	Pro. Rate 2	Scale Reading	Weight Change	Firebox Top	Firebox Bottom	Firebox Back	Firebox Left	Firebox Right	Avg. Stove Surface	Catalyst Exit	Stack	Filter 1	Dryer Exit 1	Filter 2	Dryer Exit 2	Ambient	Draft ("H_2O)	CO_2 (%)	CO (%)
105															11.1		529	340	249	440	413	394	1017	442					73	-0.075		
106															11.0		529	343	251	441	414	396	1028	443					72	-0.075		
107															10.8		530	345	253	442	414	397	1028	444					73	-0.075		
108															10.7		530	348	255	443	415	398	1011	443					73	-0.075		
109															10.6		529	352	257	444	415	399	992	441					73	-0.074		
110															10.5		527	355	259	445	415	400	977	438					73	-0.074		
111															10.3		525	358	261	446	415	401	971	436					73	-0.073		
112															10.2		523	362	263	447	416	402	965	434					74	-0.073		
113															10.1		520	365	266	448	416	403	962	432					73	-0.073		
114															10.0		517	368	268	449	416	404	962	431					74	-0.074		
115															9.9		516	370	270	450	416	404	965	430					72	-0.073		
116															9.7		514	373	272	451	417	405	965	431					73	-0.073		
117															9.6		512	375	275	452	416	406	964	430					73	-0.073		
118															9.5		510	378	277	453	417	407	966	429					73	-0.073		
119															9.4		509	380	280	454	416	408	967	428					72	-0.072		
120															9.3		508	382	283	455	417	409	970	428					73	-0.073		
121															9.2		506	385	286	455	417	410	971	427					73	-0.072		
122															9.0		506	387	289	457	417	411	971	426					73	-0.072		
123															8.9		505	389	292	457	417	412	977	427					72	-0.072		
124															8.8		505	391	295	458	418	413	985	428					72	-0.072		
125															8.7		506	393	298	459	421	415	980	428					73	-0.071		
126															8.6		506	395	302	460	422	417	978	427					73	-0.071		
127															8.5		506	397	305	461	422	418	967	425					73	-0.070		
128															8.4		504	398	308	462	423	419	963	424					74	-0.071		
129															8.3		502	399	311	463	423	420	953	423					73	-0.070		
130															8.2		499	399	314	464	423	420	945	422					73	-0.071		
131															8.1		495	400	317	465	424	420	939	420					73	-0.070		
132															8.0		491	400	320	465	423	420	937	419					73	-0.070		
															7.9		487	400	324	466	424	420	930	417					73	-0.069		
															7.8		484	400	327	466	425	420	927	415					73	-0.069		
															7.7		480	400	331	467	426	421	931	415					72	-0.069		
															7.7		477	400	335	467	427	421	933	414					73	-0.069		
															7.6		475	399	338	467	428	421	936	414					72	-0.069		
															7.5		472	399	342	467	429	422	932	416					73	-0.070		
															7.4		470	398	346	468	430	422	942	415					73	-0.069		

Wood Heater Test Data
Hign Burn Emissions Data

Run: 3

Manufacturer: Kuma Stoves
Model: Aspen LE
Tracking No.: 2357
Project No.: 0123WM011E
Test Date: 28-Feb-19
Beginning Clock Time: 11:07

Total Sampling Time: 132 min
Recording Interval: 1 min
Background Sample Volume: _____ cubic feet

Meter Box Y Factor: 1.009 (1) 0.996 (2) 0.998 (Amb)

Barometric Pressure: Begin _____ Middle _____ End _____ Average 0

OMNI Equipment Numbers: _____

PM Control Modules: 371, 372
Dilution Tunnel MW(dry): 29.00 lb/lb-mole
Dilution Tunnel MW(wet): 28.78 lb/lb-mole
Dilution Tunnel H2O: 2.00 percent
Dilution Tunnel Static: -0.109 "H2O
Tunnel Area: 0.19635 ft2
Pitot Tube Cp: 0.99

Avg. Tunnel Velocity: #DIV/0! ft/sec.
Initial Tunnel Flow: #DIV/0! scfm
Average Tunnel Flow: #DIV/0! scfm
Post-Test Leak Check (1): _____ cfm @ _____ in. Hg
Post-Test Leak Check (2): _____ cfm @ _____ in. Hg
Average Test Piece Fuel Moisture: 18.08 Dry Basis %

Technician Signature: 

Velocity Traverse Data										
	Pt.1	Pt.2	Pt.3	Pt.4	Pt.5	Pt.6	Pt.7	Pt.8	Center	
Initial dP										"H2O
Temp:										°F

V_{strav} _____ ft/sec V_{scent} _____ ft/sec F_p _____

	Particulate Sampling Data														Fuel Weight (lb)		Temperature Data (°F)													Stack Gas Data		
Elapsed Time (min)	Gas Meter 1 (ft^3)	Gas Meter 2 (ft^3)	Sample Rate 1 (cfm)	Sample Rate 2 (cfm)	Orifice dH 1 ("H_2O)	Meter 1 Temp (°F)	Meter 1 Vacuum ("Hg)	Orifice dH 2 ("H_2O)	Meter 2 Temp (°F)	Meter 2 Vacuum ("Hg)	Dilution Tunnel (°F)	Dilution Tunnel Center dP	Pro. Rate 1	Pro. Rate 2	Scale Reading	Weight Change	Firebox Top	Firebox Bottom	Firebox Back	Firebox Left	Firebox Right	Avg. Stove Surface	Catalyst Exit	Stack	Filter 1	Dryer Exit 1	Filter 2	Dryer Exit 2	Ambient	Draft ("H_2O)	CO_2 (%)	CO (%)
															7.3		471	397	350	468	431	423	976	420					72	-0.068		
															7.2		473	396	354	468	432	425	986	422					73	-0.067		
															7.1		476	395	358	469	433	426	991	424					74	-0.067		
															7.0		479	394	361	470	434	428	993	424					72	-0.068		
															6.8		482	393	365	472	435	429	993	425					73	-0.068		
															6.8		484	392	368	474	436	431	990	426					73	-0.067		
															6.7		487	391	370	476	437	432	988	426					72	-0.068		
															6.5		489	391	373	478	439	434	987	425					73	-0.067		
															6.5		490	390	375	481	441	435	978	425					73	-0.068		
															6.4		490	389	377	484	443	437	961	422					73	-0.067		
															6.3		490	388	379	486	444	437	953	419					73	-0.067		
															6.2		489	388	381	489	446	439	947	419					72	-0.067		
															6.1		488	388	382	491	447	439	943	418					72	-0.067		
															6.0		488	388	384	494	449	441	943	418					72	-0.067		
															5.9		488	387	385	497	450	441	979	420					73	-0.067		
															5.8		488	387	386	499	453	443	975	421					73	-0.067		
															5.7		488	387	388	501	454	444	975	421					74	-0.067		
															5.6		488	387	389	503	455	444	969	420					73	-0.067		
															5.6		488	387	390	505	457	445	962	419					72	-0.066		
															5.5		487	388	392	507	459	447	965	419					73	-0.067		
															5.4		486	388	393	508	461	447	955	417					73	-0.066		
															5.3		484	388	394	510	462	448	945	414					72	-0.066		
															5.2		483	387	395	510	464	448	934	413					73	-0.066		
															5.2		479	387	395	512	466	448	921	412					72	-0.065		
															5.1		477	387	396	513	468	448	916	409					72	-0.064		
															5.0		474	386	396	513	471	448	908	408					73	-0.065		
															4.9		471	385	396	514	472	448	906	406					73	-0.064		
															4.9		469	384	395	515	474	447	898	406					73	-0.064		
															4.8		465	383	395	515	476	447	897	405					73	-0.066		
															4.7		463	383	395	515	478	447	897	403					73	-0.064		
															4.6		461	382	395	516	478	446	898	402					73	-0.064		
															4.6		458	382	395	516	480	446	896	402					73	-0.064		
															4.5		456	381	395	517	482	446	892	401					73	-0.064		
															4.5		454	381	395	517	483	446	886	400					73	-0.064		
															4.4		451	381	395	517	484	446	879	397					73	-0.063		

Wood Heater Test Data
Hign Burn Emissions Data

Run: 3

Manufacturer: Kuma Stoves
Model: Aspen LE
Tracking No.: 2357
Project No.: 0123WM011E
Test Date: 28-Feb-19
Beginning Clock Time: 11:07

Total Sampling Time: 132 min
Recording Interval: 1 min
Background Sample Volume: _____ cubic feet

Meter Box Y Factor: 1.009 (1) 0.996 (2) 0.998 (Amb)

Barometric Pressure:	Begin	Middle	End	Average
				0

OMNI Equipment Numbers: _____

PM Control Modules: 371, 372
Dilution Tunnel MW(dry): 29.00 lb/lb-mole
Dilution Tunnel MW(wet): 28.78 lb/lb-mole
Dilution Tunnel H2O: 2.00 percent
Dilution Tunnel Static: -0.109 "H2O
Tunnel Area: 0.19635 ft2
Pitot Tube Cp: 0.99

Avg. Tunnel Velocity: #DIV/0! ft/sec.
Initial Tunnel Flow: #DIV/0! scfm
Average Tunnel Flow: #DIV/0! scfm
Post-Test Leak Check (1): _____ cfm @ _____ in. Hg
Post-Test Leak Check (2): _____ cfm @ _____ in. Hg
Average Test Piece Fuel Moisture: 18.08 Dry Basis %

Technician Signature: _____

Velocity Traverse Data										
	Pt.1	Pt.2	Pt.3	Pt.4	Pt.5	Pt.6	Pt.7	Pt.8	Center	
Initial dP										"H2O
Temp:										°F

V_{strav} _____ ft/sec V_{scent} _____ ft/sec F_p _____

	Particulate Sampling Data														Fuel Weight (lb)		Temperature Data (°F)											Stack Gas Data		
Elapsed Time (min)	Gas Meter 1 (ft^3)	Gas Meter 2 (ft^3)	Sample Rate 1 (cfm)	Sample Rate 2 (cfm)	Orifice dH 1 ("H_2O)	Meter 1 Temp (°F)	Meter 1 Vacuum ("Hg)	Orifice dH 2 ("H_2O)	Meter 2 Temp (°F)	Meter 2 Vacuum ("Hg)	Dilution Tunnel (°F)	Dilution Tunnel Center dP	Pro. Rate 1	Pro. Rate 2	Scale Reading	Weight Change	Firebox Top	Firebox Bottom	Firebox Back	Firebox Left	Firebox Right	Avg. Stove Surface	Catalyst Exit	Stack	Filter 1	Dryer Exit 1	Filter 2	Dryer Exit 2	Ambient	Draft ("H_2O)	CO_2 (%)	CO (%)
															4.3		448	380	396	518	486	446	875	395					73	-0.063		
															4.3		446	380	396	518	487	445	875	396					73	-0.063		
															4.2		443	380	396	518	487	445	866	395					73	-0.063		
															4.1		441	380	397	518	488	445	877	396					73	-0.063		
															4.1		441	381	397	519	489	445	895	401					73	-0.063		
															4.0		441	381	398	519	489	446	898	402					73	-0.063		
															4.0		441	382	399	520	490	446	917	403					73	-0.064		
															3.9		442	382	400	520	491	447	920	404					73	-0.062		
															3.8		443	383	400	520	491	447	923	405					73	-0.063		
															3.8		443	383	401	521	492	448	917	404					73	-0.063		
															3.7		442	384	401	521	493	448	894	402					73	-0.063		
															3.7		440	385	402	522	495	449	879	399					73	-0.063		
															3.6		438	386	403	522	496	449	867	395					73	-0.063		
															3.6		434	387	405	523	498	449	854	393					73	-0.061		
															3.5		431	388	406	524	499	450	846	390					73	-0.060		
Avg/Tot	0.000	0.000	#DIV/0!	#DIV/0!	#DIV/0!	#DIV/0!		#DIV/0!	#DIV/0!		#DIV/0!	#DIV/0!	#DIV/0!	#DIV/0!								352.8				#DIV/0!	#DIV/0!	#DIV/0!	71	-0.069		

Wood Heater Test Results

Manufacturer: Kuma Stoves
Model: Aspen LE
Project No.: 0123WM011E
Tracking No.: 2357
Run: 3
Test Date: 02/28/19

Burn Rate	**2.89**	**kg/hr dry**
Average Tunnel Temperature		degrees Fahrenheit
Average Gas Velocity in Dilution Tunnel - vs		feet/second
Average Gas Flow Rate in Dilution Tunnel - Qsd		dscf/hour
Average Delta p		inches H20
Total Time of Test	132	minutes

Technician Signature: _____

Adjunct to ASTM E XXXX Wood Heater Cordwood Test Method - May 10, 2017 Version

Cordwood Fuel Load Calculators - 10 lb/ft^3 Nominal Load Density

Core 45-65% of Total Load Weight, Remainder 35-55% of Total Load Weight

Values to be input manually

THIS DOCUMENT IS NOT AN ASTM STANDARD; IT IS UNDER CONSIDERATION WITHIN AN ASTM TECHNICAL COMMITTEE BUT HAS NOT RECEIVED ALL APPROVALS REQUIRED TO BECOME AN ASTM STANDARD. IT SHALL NOT BE REPRODUCED OR CIRCULATED OR QUOTED, IN WHOLE OR IN PART, OUTSIDE OF ASTM COMMITTEE ACTIVITIES EXCEPT WITH THE APPROVAL OF THE CHAIRMAN OF THE COMMITTEE HAVING JURISDICTION AND THE PRESIDENT OF THE SOCIETY. *COPYRIGHT ASTM, 100 BARR HARBOR DRIVE, WEST CONSHOHOCKEN, PA 19428. ALL RIGHTS RESERVED.*

For All Usable Firebox Volumes - High Fire Test Only

Nominal Required Load Density (wet basis)	10	lb/ft^3				
Usable Firebox Volume	1.74	ft^3				
Total Nom. Load Wt. Target	17.40	lb				
Total Load Wt. Allowable Range	16.50	to	18.30	lb		
Core Target Wt. Allowable Range	7.80	to	11.30	lb		
Remainder Load Wt. Allowable Range	6.10	to	9.60	lb		
						Mid-Point
Core Load Pc. Wt. Allowable Range	2.60	to	4.40	lb		3.50
Remainder Load Pc. Wt. Allowable Range	1.70	to	9.60	lb		5.65
	Pc. #					
Core Load Piece Wt. Actual	1	3.58	lb	In Range		
	2	3.35	lb	In Range		
	3	2.86	lb	In Range		
Core Load Total. Wt. Actual		9.79	lb	In Range		
	Pc. #					
Remainder Load Piece Wt.	1	2.57	lb	In Range		
(1 to 3 Pcs.)	2	4.43	lb	In Range		
	3		lb	NA		
Remainder Load Tot. Wt. Act		7.00	lb	In Range		
Total Load Wt. Actual		16.78	lb	In Range		
Core % of Total Wt.		58%		In Range	45-65%	
Remainder % of Total Wt.		42%		In Range	35-55%	
Actual Load % of Nominal Target		96%		In Range	95-105%	
Actual Fuel Load Density		9.6	lb/ft^3			
Kindling and Start-up Fuel						
Maximim Kindling Wt. (20% of Tot. Load Wt.)		3.36	lb			
Actual Kindling Wt.		3.36	lb	In Range	20.0%	
Maximum Start-up Fuel Wt. (30% of Tot. Load Wt.)		5.04	lb			
Actual Start-up Fuel Wt.		5.03	lb	In Range	30.0%	
Allowable Residual Start-up Fuel Wt. Range	1.7	to	3.4	lb		Mid-Point
Actual Residual Start-up Fuel Wt.		2	lb	In Range		2.5
Total Wt. All Fuel Added (wet basis)		25.17	lb			
High Fire Test Run End Point Range	Low		High			Mid-Point
Based on Fuel Load Wt. (w/tares)	1.5	to	1.8	lb		1.7
Actual Fuel Load Ending Wt.		1.6	lb	In Range		

Fuel Piece Moisture Reading (%-dry basis)

1	2	3	Ave.		Pc. Wt. Dry Basis			
17.4	18.1	22.3	19.3	In Range	3.00	lb	1.36	kg
17.3	17.6	22	19.0	In Range	2.82	lb	1.28	kg
17.3	19.2	26.2	20.9	In Range	2.36	lb	1.07	kg
17.3	17	23.6	19.3	In Range	2.15	lb	0.98	kg
19	20.1	23.1	20.7	In Range	3.67	lb	1.66	kg
			NA	NA	NA	lb	NA	kg

Total Load Ave. MC (%-dry basis)	19.9	In Range			
Total Load Ave. MC % (wet basis)	16.6				
Total Test Load Weight (dry basis) →			14.00	lb	6.35 kg
Kindling Moisture (%-dry basis)					
8.408 8.408 8.408	8.4	In Range	3.10	lb	1.40 kg
Start-up Fuel Moisture Readings (%-dry basis)					
19.019 19.019 19.019	19.0	In Range	4.23	lb	1.92 kg
Total Wt. All Fuel Added (dry basis) →			21.33	lb	9.67 kg
Total Wt. All Fuel Burned (dry basis) →			17.7	lb	8.0 kg

OMNI-Test Laboratories, Inc.

Wood Heater Run Sheets

Client: Kuma Stoves Project Number: 0123WM011E Run Number: 3
Model: K-180 Aspen LE Tracking Number: 2357 Date: 2/28/19
Test Crew: B Davis
OMNI Equipment ID numbers:

Wood Heater Run Notes

Air Control Settings

Primary: Now-Sampling High

Empty weight = 439.3

Secondary: fixed

Tertiary/Pilot: N/A

Fan: on High

Preburn Notes

Time	Notes
0	Torch used for 20 seconds, door closed by 35 seconds Bypass closed at 15 min. Comb Air fully open. FAN Not used during kindling/startup.

Test Notes

Sketch test fuel configuration:

see photo

Start up procedures & Timeline:

Bypass: closed at 1:15
Fuel loaded by: 1:15
Door closed at: 1:15
Primary air: fully open entire test

Notes: FAN turned on at 5:00 min.

Time	Notes
	Stopped test @ 2:13 hrs

Technician Signature: BD Date: 4/3/19

Run 4

Medium Burn

Wood Heater Test Data
Low Burn Emissions Data

Run: 4

Manufacturer: Kuma Stoves
Model: Aspen LE
Tracking No.: 2357
Project No.: 0123WM011E
Test Date: 26-Feb-19
Beginning Clock Time: 15:13

Total Sampling Time: 605 min
Recording Interval: 1 min
Background Sample Volume: 89.485 cubic feet

Meter Box Y Factor: 1.009 (1) 0.996 (2) 0.996 (Amb)

Barometric Pressure:	Begin	Middle	End	Average	
	28.33	28.37	28.41	28.37	0

OMNI Equipment Numbers:

PM Control Modules: 371, 372
Dilution Tunnel MW(dry): 29.00 lb/lb-mole
Dilution Tunnel MW(wet): 28.78 lb/lb-mole
Dilution Tunnel H2O: 2.00 percent
Dilution Tunnel Static: -0.110 "H2O
Tunnel Area: 0.19635 ft2
Pitot Tube Cp: 0.99

Avg. Tunnel Velocity: 18.35 ft/sec.
Initial Tunnel Flow: 193.2 scfm
Average Tunnel Flow: 193.0 scfm
Post-Test Leak Check (1): 0.000 cfm @ 9 in. Hg
Post-Test Leak Check (2): 0.000 cfm @ 10 in. Hg
Average Test Piece Fuel Moisture: 20.37 Dry Basis %

Technician Signature:

Velocity Traverse Data	Pt.1	Pt.2	Pt.3	Pt.4	Pt.5	Pt.6	Pt.7	Pt.8	Center	
Initial dP	0.068	0.074	0.072	0.070	0.070	0.074	0.068	0.066	0.070	"H2O
Temp:	92	92	91	91	91	91	91	91	92	°F

V_{strav} 18.44 ft/sec V_{scent} 18.43 ft/sec F_p 1.001

	Particulate Sampling Data														Fuel Weight (lb)		Temperature Data (°F)													Stack Gas Data		
Elapsed Time (min)	Gas Meter 1 (ft^3)	Gas Meter 2 (ft^3)	Sample Rate 1 (cfm)	Sample Rate 2 (cfm)	Orifice dH 1 ("H_2O)	Meter 1 Temp (°F)	Meter 1 Vacuum ("Hg)	Orifice dH 2 ("H_2O)	Meter 2 Temp (°F)	Meter 2 Vacuum ("Hg)	Dilution Tunnel (°F)	Dilution Tunnel Center dP	Pro. Rate 1	Pro. Rate 2	Scale Reading	Weight Change	Firebox Top	Firebox Bottom	Firebox Back	Firebox Left	Firebox Right	Avg. Stove Surface	Catalyst Exit	Stack	Filter 1	Dryer Exit 1	Filter 2	Dryer Exit 2	Ambient	Draft ("H_2O)	CO_2 (%)	CO (%)
0	0.000	0.000			0.00	76	1.56	0.01	76	1.5	93	0.070			19.8		319	367	378	417	411	378	383	202	83	62	87	62	76	-0.026	3.89	1.19
1	0.128	0.137	0.13	0.14	1.81	76	-0.91	1.40	76	-1.7	119	0.070	88	90	19.7	-0.092468	317	366	377	416	408	377	354	247	82	61	86	61	76	-0.039	2.63	0.22
2	0.277	0.294	0.15	0.16	1.78	76	-1.31	1.40	76	-1.7	99	0.070	101	101	19.7	-0.026917	312	365	368	415	407	373	342	225	82	61	85	61	76	-0.036	1.24	0.28
3	0.425	0.451	0.15	0.16	1.76	76	-1.31	1.38	76	-1.8	98	0.070	100	101	19.6	-0.072448	308	363	360	413	405	370	389	230	82	61	84	61	76	-0.040	2.61	0.78
4	0.572	0.606	0.15	0.16	1.74	76	-1.17	1.37	76	-2	98	0.070	99	100	19.5	-0.085907	305	362	355	411	403	367	410	235	83	61	84	61	76	-0.041	3.19	0.78
5	0.718	0.761	0.15	0.16	1.72	76	-0.97	1.36	76	-1.7	97	0.070	99	99	19.4	-0.1026	303	360	350	408	400	364	429	242	83	61	83	61	76	-0.042	4.25	0.88
6	0.867	0.917	0.15	0.16	1.84	76	-0.96	1.41	76	-1.8	97	0.070	101	100	19.3	-0.084595	300	358	346	405	396	361	433	245	84	61	83	61	75	-0.042	4.43	1.04
7	1.017	1.074	0.15	0.16	1.82	76	-1.06	1.39	76	-2	97	0.070	101	101	19.3	-0.092255	299	356	342	402	393	358	435	249	84	61	82	61	75	-0.043	4.7	0.98
8	1.166	1.231	0.15	0.16	1.79	76	-1.22	1.39	76	-1.8	97	0.070	101	101	19.1	-0.109863	297	354	338	399	389	355	436	253	85	61	82	61	75	-0.043	4.76	1.01
9	1.313	1.386	0.15	0.16	1.72	76	-1.25	1.37	76	-1.8	97	0.070	99	99	19.0	-0.102356	295	352	335	395	386	353	437	255	85	61	82	61	75	-0.044	4.85	1.02
10	1.459	1.543	0.15	0.16	1.71	76	-1.6	1.39	76	-2.3	98	0.070	99	101	19.0	-0.088776	294	350	332	392	383	350	434	255	85	61	81	61	75	-0.044	4.89	1.1
11	1.601	1.697	0.14	0.15	1.72	76	-2.32	1.39	76	-2.8	98	0.070	96	99	18.8	-0.11502	293	348	329	389	380	348	430	254	85	61	82	61	76	-0.043	4.82	1.09
12	1.743	1.847	0.14	0.15	1.76	76	-6.69	1.15	76	-5.3	98	0.070	96	96	18.7	-0.097199	292	345	326	385	377	345	439	255	85	61	83	61	75	-0.044	5.08	1.06
13	1.888	2.001	0.15	0.15	1.56	76	-9.35	1.20	76	-10	98	0.070	98	99	18.7	-0.085449	290	343	324	382	374	343	429	255	85	61	85	61	76	-0.045	4.88	1.05
14	2.031	2.147	0.14	0.15	1.96	76	-11.86	1.17	76	-12.2	97	0.070	97	94	18.5	-0.136566	289	341	322	379	372	341	425	253	85	61	86	62	76	-0.044	4.83	1.05
15	2.170	2.325	0.14	0.18	1.43	76	-12.58	0.80	76	-1.6	99	0.070	94	114	18.5	-0.051056	287	339	319	376	369	338	424	253	86	62	87	62	76	-0.044	4.92	1.06
16	2.312	2.480	0.14	0.16	1.46	76	-0.49	1.40	76	-2	95	0.070	96	99	18.4	-0.071655	287	337	324	373	367	338	433	222	86	63	88	62	76	-0.039	5.62	1.47
17	2.460	2.637	0.15	0.16	1.81	76	-0.95	1.40	76	-1.9	93	0.070	100	100	18.3	-0.058442	286	335	325	369	365	336	441	208	87	62	87	62	76	-0.038	5.16	1.13
18	2.609	2.794	0.15	0.16	1.81	76	-1.21	1.39	76	-1.9	93	0.070	100	100	18.3	-0.054901	285	333	326	366	363	335	428	200	87	62	86	62	76	-0.036	4.54	0.93
19	2.758	2.951	0.15	0.16	1.81	76	-1.35	1.40	76	-1.7	93	0.070	100	100	18.2	-0.047394	283	330	326	363	360	332	417	196	86	62	84	62	76	-0.035	4.44	0.91
20	2.906	3.107	0.15	0.16	1.80	76	-0.89	1.40	76	-2	92	0.070	100	100	18.2	-0.040802	281	328	326	360	358	331	408	191	85	62	83	62	76	-0.035	4.43	0.96
21	3.054	3.264	0.15	0.16	1.80	76	-0.89	1.40	76	-1.7	92	0.070	100	100	18.2	-0.042877	279	326	326	357	355	329	401	188	84	62	82	62	76	-0.034	4.49	1.01
22	3.203	3.420	0.15	0.16	1.79	76	-1.34	1.40	76	-1.8	92	0.070	100	100	18.1	-0.043243	277	324	325	354	353	327	395	186	84	62	82	62	77	-0.034	4.59	1.07
23	3.351	3.577	0.15	0.16	1.79	76	-1.05	1.38	76	-1.9	91	0.070	100	100	18.1	-0.051056	275	322	325	351	351	325	391	183	83	62	81	62	75	-0.033	4.65	1.1
24	3.499	3.733	0.15	0.16	1.78	76	-1.36	1.39	76	-1.8	91	0.070	100	100	18.0	-0.037628	272	320	324	348	349	323	386	182	83	62	81	62	76	-0.033	4.55	1.16
25	3.647	3.889	0.15	0.16	1.78	77	-0.91	1.38	76	-1.9	91	0.070	99	100	18.0	-0.049622	270	317	323	345	346	320	381	180	82	62	81	62	75	-0.032	4.61	1.2
26	3.795	4.045	0.15	0.16	1.77	77	-1.32	1.38	76	-2	91	0.070	99	100	17.9	-0.029815	268	315	322	342	344	318	377	179	82	62	81	62	75	-0.032	4.7	1.28
27	3.942	4.200	0.15	0.16	1.77	77	-0.87	1.37	76	-1.8	91	0.070	99	99	17.9	-0.065033	266	313	321	340	342	316	373	177	82	62	82	62	75	-0.032	4.78	1.36
28	4.090	4.356	0.15	0.16	1.80	77	-0.94	1.44	76	-2.1	91	0.070	99	100	17.8	-0.046051	264	311	320	337	340	314	370	176	82	62	82	62	75	-0.031	4.88	1.43
29	4.240	4.515	0.15	0.16	1.80	77	-1.35	1.42	76	-2	90	0.070	101	101	17.8	-0.053162	262	309	319	334	338	312	368	176	82	62	83	62	75	-0.031	5	1.51
30	4.389	4.673	0.15	0.16	1.79	77	-1.25	1.42	76	-1.9	91	0.070	100	101	17.7	-0.092316	260	307	318	331	336	310	367	175	82	62	83	62	75	-0.032	5.11	1.57
31	4.538	4.831	0.15	0.16	1.78	77	-0.93	1.41	77	-1.9	90	0.070	100	101	17.6	-0.066559	256	304	317	329	335	308	365	175	83	62	83	62	75	-0.032	5.19	1.63
32	4.687	4.988	0.15	0.16	1.79	77	-1.22	1.39	77	-2.2	90	0.070	100	100	17.6	-0.049957	253	300	316	326	333	306	364	173	83	62	84	62	75	-0.031	5.3	1.71
33	4.835	5.145	0.15	0.16	1.78	77	-0.94	1.38	77	-1.9	90	0.070	99	100	17.5	-0.08255	249	296	315	324	331	303	361	173	84	62	84	62	75	-0.031	5.4	1.74
34	4.983	5.301	0.15	0.16	1.76	77	-1.38	1.36	77	-2.1	90	0.070	99	99	17.4	-0.050293	246	292	313	321	329	300	361	172	84	62	84	62	76	-0.031	5.48	1.8

Wood Heater Test Data
Low Burn Emissions Data

Run: 4

Manufacturer: Kuma Stoves
Model: Aspen LE
Tracking No.: 2357
Project No.: 0123WM011E
Test Date: 26-Feb-19
Beginning Clock Time: 15:13

Total Sampling Time: 605 min
Recording Interval: 1 min
Background Sample Volume: 89.485 cubic feet

Meter Box Y Factor: 1.009 (1) 0.996 (2) 0.996 (Amb)

Barometric Pressure:	Begin	Middle	End	Average	
	28.33	28.37	28.41	28.37	0

OMNI Equipment Numbers:

PM Control Modules: 371, 372
Dilution Tunnel MW(dry): 29.00 lb/lb-mole
Dilution Tunnel MW(wet): 28.78 lb/lb-mole
Dilution Tunnel H2O: 2.00 percent
Dilution Tunnel Static: -0.110 "H2O
Tunnel Area: 0.19635 ft2
Pitot Tube Cp: 0.99

Avg. Tunnel Velocity: 18.35 ft/sec.
Initial Tunnel Flow: 193.2 scfm
Average Tunnel Flow: 193.0 scfm
Post-Test Leak Check (1): 0.000 cfm @ 9 in. Hg
Post-Test Leak Check (2): 0.000 cfm @ 10 in. Hg
Average Test Piece Fuel Moisture: 20.37 Dry Basis %

Technician Signature:

Velocity Traverse Data	Pt.1	Pt.2	Pt.3	Pt.4	Pt.5	Pt.6	Pt.7	Pt.8	Center	
Initial dP	0.068	0.074	0.072	0.070	0.070	0.074	0.068	0.066	0.070	"H2O
Temp:	92	92	91	91	91	91	91	91	92	°F

V_{strav} 18.44 ft/sec V_{scent} 18.43 ft/sec F_p 1.001

	Particulate Sampling Data														Fuel Weight (lb)		Temperature Data (°F)													Stack Gas Data		
Elapsed Time (min)	Gas Meter 1 (ft^3)	Gas Meter 2 (ft^3)	Sample Rate 1 (cfm)	Sample Rate 2 (cfm)	Orifice dH 1 ("H_2O)	Meter 1 Temp (°F)	Meter 1 Vacuum ("Hg)	Orifice dH 2 ("H_2O)	Meter 2 Temp (°F)	Meter 2 Vacuum ("Hg)	Dilution Tunnel (°F)	Dilution Tunnel Center dP	Pro. Rate 1	Pro. Rate 2	Scale Reading	Weight Change	Firebox Top	Firebox Bottom	Firebox Back	Firebox Left	Firebox Right	Avg. Stove Surface	Catalyst Exit	Stack	Filter 1	Dryer Exit 1	Filter 2	Dryer Exit 2	Ambient	Draft ("H_2O)	CO_2 (%)	CO (%)
35	5.130	5.455	0.15	0.15	1.79	77	-1.33	1.40	77	-2.2	90	0.070	99	98	17.4	-0.058411	243	288	312	319	327	298	362	171	84	62	84	62	76	-0.031	5.55	1.78
36	5.278	5.611	0.15	0.16	1.78	77	-1	1.35	77	-2.2	90	0.070	99	99	17.3	-0.076385	240	285	311	316	325	295	363	171	84	62	84	62	76	-0.031	5.58	1.77
37	5.427	5.769	0.15	0.16	1.82	77	-1.53	1.38	77	-2.7	90	0.070	100	101	17.2	-0.067688	237	282	310	314	324	293	364	170	84	62	84	62	76	-0.031	5.61	1.79
38	5.577	5.924	0.15	0.16	1.80	77	-1.37	1.36	77	-2.8	90	0.070	101	99	17.1	-0.081451	234	279	309	312	322	291	363	170	84	63	84	63	76	-0.031	5.63	1.79
39	5.725	6.077	0.15	0.15	1.79	77	-1.16	1.33	77	-3.3	90	0.070	99	97	17.1	-0.055146	232	277	308	310	321	290	361	169	85	63	85	63	76	-0.031	5.66	1.82
40	5.872	6.233	0.15	0.16	1.78	77	-1.12	1.33	77	-4.3	90	0.070	99	99	17.0	-0.054321	229	274	307	307	320	287	358	169	85	63	85	63	76	-0.031	5.68	1.92
41	6.020	6.387	0.15	0.15	1.78	77	-1.67	1.38	77	-5.3	90	0.070	99	98	17.0	-0.041107	227	271	306	305	318	285	354	168	85	63	85	62	76	-0.030	5.66	1.92
42	6.169	6.542	0.15	0.16	1.85	77	-1.79	1.33	77	-6.6	90	0.070	100	99	16.9	-0.085968	225	269	305	303	317	284	351	167	85	63	85	63	78	-0.030	5.7	1.93
43	6.319	6.697	0.15	0.16	1.80	77	-1.61	1.41	77	-7.9	90	0.070	101	99	16.8	-0.074555	223	267	304	301	316	282	348	167	85	63	85	63	77	-0.035	5.7	1.95
44	6.469	6.853	0.15	0.16	1.75	77	-1.83	1.33	77	-8.6	90	0.070	101	99	16.8	-0.051117	220	265	303	299	315	280	347	166	85	63	85	63	77	-0.034	5.8	1.94
45	6.617	7.008	0.15	0.16	1.76	77	-1.96	1.35	77	-9.3	90	0.070	99	99	16.7	-0.046997	218	263	301	297	313	278	346	166	85	63	85	63	77	-0.034	5.86	1.95
46	6.766	7.164	0.15	0.16	1.84	77	-1.74	1.36	77	-10.1	90	0.070	100	99	16.7	-0.072967	217	261	300	295	312	277	346	166	85	63	85	63	77	-0.034	5.96	2
47	6.916	7.321	0.15	0.16	1.75	77	-2.28	1.39	77	-10.8	90	0.070	101	100	16.6	-0.07013	215	259	299	293	311	275	347	166	85	63	85	63	76	-0.034	6.03	2.02
48	7.064	7.476	0.15	0.16	1.78	77	-2.45	1.37	77	-11.3	90	0.070	99	99	16.5	-0.085296	214	258	298	291	310	274	347	165	85	63	85	63	76	-0.034	6.11	2.04
49	7.211	7.636	0.15	0.16	1.77	77	-2.43	3.00	77	-6.5	90	0.070	99	102	16.5	-0.055206	212	256	297	289	309	273	349	165	85	63	85	63	77	-0.034	6.24	2.06
50	7.356	7.792	0.15	0.16	1.72	77	-2.97	1.41	77	-2	91	0.070	97	99	16.4	-0.082978	211	254	296	287	309	271	350	165	85	63	86	63	77	-0.034	6.28	2.11
51	7.504	7.949	0.15	0.16	1.86	77	-3.91	1.41	77	-2	91	0.070	99	100	16.3	-0.057739	210	253	295	285	308	270	352	165	85	63	86	63	78	-0.034	6.32	2.12
52	7.653	8.105	0.15	0.16	1.88	77	-4.59	1.41	77	-2	91	0.070	100	99	16.2	-0.089386	209	251	294	284	307	269	353	165	85	63	86	63	76	-0.034	6.42	2.15
53	7.801	8.263	0.15	0.16	1.83	77	-5.36	1.39	77	-2	91	0.070	99	101	16.2	-0.048126	208	250	293	282	306	268	355	165	85	63	85	63	77	-0.034	6.47	2.15
54	7.949	8.420	0.15	0.16	1.76	77	-6.42	1.40	77	-1.8	91	0.070	99	100	16.1	-0.077179	208	249	292	280	305	267	357	165	84	63	85	63	77	-0.034	6.5	2.17
55	8.097	8.577	0.15	0.16	1.72	77	-7.07	1.39	77	-2	91	0.070	99	100	16.0	-0.058685	207	248	291	279	304	266	359	165	84	63	85	63	76	-0.034	6.55	2.19
56	8.244	8.734	0.15	0.16	1.79	78	-8	1.39	77	-2	91	0.070	98	100	16.0	-0.088563	207	246	290	277	304	265	362	165	84	63	84	63	77	-0.035	6.64	2.22
57	8.392	8.890	0.15	0.16	1.76	78	-8.91	1.38	77	-1.8	91	0.070	99	99	15.9	-0.057983	206	245	289	276	303	264	365	165	84	63	84	63	76	-0.034	6.76	2.24
58	8.539	9.046	0.15	0.16	1.71	78	-9.31	1.38	77	-1.8	91	0.070	98	99	15.8	-0.072754	206	244	288	274	302	263	366	165	84	63	84	63	77	-0.034	6.94	2.22
59	8.687	9.202	0.15	0.16	1.76	78	-10.13	1.37	77	-1.8	90	0.070	99	99	15.8	-0.055389	206	243	287	273	302	262	368	165	83	63	84	63	77	-0.034	6.88	2.22
60	8.849	9.357	0.16	0.15	3.24	78	-2.95	1.41	77	-2.2	91	0.070	109	99	15.7	-0.078308	206	242	286	271	301	261	369	165	84	64	84	63	77	-0.034	6.75	2.28
61	8.998	9.515	0.15	0.16	1.84	78	-1.31	1.41	77	-2.1	90	0.070	100	101	15.6	-0.061676	206	241	285	270	301	261	370	165	84	63	84	63	78	-0.034	6.53	2.58
62	9.147	9.672	0.15	0.16	1.82	78	-1.03	1.39	77	-1.9	91	0.070	100	100	15.6	-0.057984	205	240	284	269	300	260	370	165	84	63	84	63	77	-0.034	6.48	2.58
63	9.297	9.828	0.15	0.16	1.82	78	-0.91	1.38	77	-2.1	91	0.070	100	99	15.5	-0.073913	205	239	283	268	300	259	371	165	84	63	84	63	77	-0.034	6.47	2.54
64	9.447	9.984	0.15	0.16	1.80	78	-0.93	1.38	77	-2	90	0.070	100	99	15.4	-0.074707	205	239	282	266	298	258	371	164	84	63	84	63	76	-0.034	6.53	2.54
65	9.597	10.140	0.15	0.16	1.79	78	-1.38	1.37	77	-2.2	90	0.070	100	99	15.3	-0.073761	205	238	281	265	298	257	372	164	83	63	84	63	77	-0.034	6.52	2.52
66	9.746	10.298	0.15	0.16	1.79	78	-1.25	1.42	77	-2.5	90	0.070	100	101	15.3	-0.063446	205	237	281	264	297	257	373	164	83	63	84	63	76	-0.033	6.56	2.53
67	9.895	10.456	0.15	0.16	1.77	78	-1.22	1.39	77	-2.4	90	0.070	100	101	15.2	-0.072907	205	236	280	263	297	256	374	164	83	63	83	63	77	-0.033	6.57	2.53
68	10.044	10.612	0.15	0.16	1.77	78	-0.94	1.38	77	-2.6	90	0.070	100	99	15.2	-0.027222	205	236	279	262	297	256	374	164	83	63	83	63	77	-0.033	6.6	2.51
69	10.193	10.769	0.15	0.16	1.82	78	-1.5	1.39	77	-2.9	90	0.070	100	100	15.1	-0.081298	205	235	278	261	296	255	376	164	83	63	83	63	77	-0.033	6.6	2.5

Wood Heater Test Data
Low Burn Emissions Data

Run: 4

Manufacturer: Kuma Stoves
Model: Aspen LE
Tracking No.: 2357
Project No.: 0123WM011E
Test Date: 26-Feb-19
Beginning Clock Time: 15:13

Total Sampling Time: 605 min
Recording Interval: 1 min
Background Sample Volume: 89.485 cubic feet

Meter Box Y Factor: 1.009 (1) 0.996 (2) 0.996 (Amb)

Barometric Pressure:	Begin	Middle	End	Average	
	28.33	28.37	28.41	28.37	0

OMNI Equipment Numbers:

PM Control Modules: 371, 372
Dilution Tunnel MW(dry): 29.00 lb/lb-mole
Dilution Tunnel MW(wet): 28.78 lb/lb-mole
Dilution Tunnel H2O: 2.00 percent
Dilution Tunnel Static: -0.110 "H2O
Tunnel Area: 0.19635 ft2
Pitot Tube Cp: 0.99

Avg. Tunnel Velocity: 18.35 ft/sec.
Initial Tunnel Flow: 193.2 scfm
Average Tunnel Flow: 193.0 scfm
Post-Test Leak Check (1): 0.000 cfm @ 9 in. Hg
Post-Test Leak Check (2): 0.000 cfm @ 10 in. Hg
Average Test Piece Fuel Moisture: 20.37 Dry Basis %

Technician Signature:

Velocity Traverse Data	Pt.1	Pt.2	Pt.3	Pt.4	Pt.5	Pt.6	Pt.7	Pt.8	Center	
Initial dP	0.068	0.074	0.072	0.070	0.070	0.074	0.068	0.066	0.070	"H2O
Temp:	92	92	91	91	91	91	91	91	92	°F

V_{strav} 18.44 ft/sec V_{scent} 18.43 ft/sec F_p 1.001

	Particulate Sampling Data														Fuel Weight (lb)		Temperature Data (°F)													Stack Gas Data		
Elapsed Time (min)	Gas Meter 1 (ft^3)	Gas Meter 2 (ft^3)	Sample Rate 1 (cfm)	Sample Rate 2 (cfm)	Orifice dH 1 ("H_2O)	Meter 1 Temp (°F)	Meter 1 Vacuum ("Hg)	Orifice dH 2 ("H_2O)	Meter 2 Temp (°F)	Meter 2 Vacuum ("Hg)	Dilution Tunnel (°F)	Dilution Tunnel Center dP	Pro. Rate 1	Pro. Rate 2	Scale Reading	Weight Change	Firebox Top	Firebox Bottom	Firebox Back	Firebox Left	Firebox Right	Avg. Stove Surface	Catalyst Exit	Stack	Filter 1	Dryer Exit 1	Filter 2	Dryer Exit 2	Ambient	Draft ("H_2O)	CO_2 (%)	CO (%)
70	10.343	10.924	0.15	0.15	1.80	78	-1.13	1.37	77	-3.1	90	0.070	100	99	15.0	-0.067139	206	234	277	260	296	255	377	164	83	63	83	63	77	-0.033	6.59	2.49
71	10.492	11.080	0.15	0.16	1.81	78	-1.36	1.38	77	-3.3	90	0.070	100	99	15.0	-0.075012	206	234	276	259	296	254	379	163	83	63	83	63	77	-0.033	6.57	2.48
72	10.641	11.236	0.15	0.16	1.78	78	-1.07	1.37	77	-3.8	90	0.070	100	99	14.9	-0.064057	206	233	276	258	295	254	381	163	83	63	83	63	77	-0.033	6.65	2.49
73	10.789	11.391	0.15	0.15	1.77	78	-1.47	1.34	78	-4	90	0.070	99	98	14.8	-0.0802	206	233	275	257	295	253	382	163	83	63	83	63	77	-0.033	6.66	2.5
74	10.937	11.546	0.15	0.15	1.85	78	-1.38	1.37	78	-4.9	90	0.070	99	98	14.7	-0.06842	206	232	274	256	295	253	384	163	83	63	83	63	77	-0.033	6.64	2.49
75	11.087	11.702	0.15	0.16	1.80	78	-1.48	1.39	78	-5.9	90	0.070	100	99	14.7	-0.043732	207	231	273	255	294	252	385	163	83	63	83	63	77	-0.033	6.66	2.49
76	11.236	11.857	0.15	0.15	1.77	78	-1.46	1.32	78	-6.6	90	0.070	100	98	14.6	-0.064209	207	231	273	254	294	252	389	163	83	63	83	63	78	-0.033	6.74	2.51
77	11.385	12.013	0.15	0.16	1.80	78	-1.72	1.40	78	-7.9	90	0.070	100	99	14.6	-0.063293	207	231	272	253	294	251	392	163	83	63	83	63	77	-0.033	6.81	2.53
78	11.534	12.168	0.15	0.15	1.76	78	-1.6	1.38	78	-8.7	90	0.070	100	98	14.5	-0.076081	208	230	271	252	294	251	395	163	83	63	83	63	77	-0.033	6.89	2.58
79	11.681	12.323	0.15	0.16	1.73	78	-1.71	1.34	78	-9.2	90	0.070	98	98	14.4	-0.059997	208	230	270	251	294	251	398	163	83	63	83	63	77	-0.033	6.9	2.57
80	11.830	12.479	0.15	0.16	1.75	78	-1.96	1.40	78	-10.2	90	0.070	100	99	14.4	-0.042755	208	229	270	250	294	250	402	163	83	63	83	63	77	-0.033	6.9	2.58
81	11.979	12.634	0.15	0.16	1.76	78	-2.01	1.34	78	-10.6	90	0.070	100	98	14.3	-0.082978	209	229	269	250	293	250	404	163	83	63	84	63	76	-0.033	6.91	2.57
82	12.127	12.789	0.15	0.15	1.73	78	-2.74	1.39	78	-11.3	90	0.070	99	98	14.3	-0.058075	209	228	268	249	293	249	407	163	83	63	84	63	76	-0.033	6.93	2.6
83	12.275	12.943	0.15	0.15	1.82	78	-2.93	1.31	78	-11.6	90	0.070	99	98	14.2	-0.087921	210	228	268	248	293	249	410	163	83	63	84	63	77	-0.033	6.99	2.62
84	12.422	13.100	0.15	0.16	1.70	78	-3.42	1.42	78	-2	90	0.070	98	100	14.1	-0.061432	210	228	267	247	293	249	413	163	83	63	84	64	77	-0.033	6.97	2.6
85	12.571	13.257	0.15	0.16	2.05	78	-4.6	1.41	78	-1.8	90	0.060	108	108	14.1	-0.03482	211	227	266	246	293	249	415	163	83	63	85	63	78	-0.034	6.99	2.62
86	12.718	13.416	0.15	0.16	1.85	78	-4.77	1.41	78	-2	90	0.060	106	109	14.0	-0.095886	211	227	266	246	293	249	417	163	83	63	85	63	77	-0.034	7.01	2.64
87	12.865	13.574	0.15	0.16	1.74	78	-5.69	1.41	78	-2	90	0.070	98	100	13.9	-0.048615	212	227	265	245	294	249	420	164	83	63	85	63	78	-0.034	7.05	2.62
88	13.011	13.732	0.15	0.16	1.77	78	-6.32	1.41	78	-1.9	90	0.070	98	100	13.8	-0.090088	212	226	265	244	293	248	422	164	83	63	84	63	76	-0.034	7.06	2.63
89	13.159	13.889	0.15	0.16	1.79	78	-7.02	1.40	78	-1.8	90	0.070	99	100	13.8	-0.028931	213	226	264	244	293	248	425	164	83	63	84	63	77	-0.035	7.1	2.62
90	13.306	14.047	0.15	0.16	1.78	78	-7.77	1.40	78	-1.9	90	0.070	98	100	13.7	-0.081451	213	226	263	243	293	248	427	163	83	64	84	63	77	-0.034	7.11	2.63
91	13.455	14.204	0.15	0.16	1.77	78	-8.2	1.40	78	-2	90	0.070	100	100	13.7	-0.0737	214	226	263	242	293	248	429	164	83	64	84	63	78	-0.035	7.17	2.64
92	13.602	14.362	0.15	0.16	1.74	78	-8.81	1.40	78	-1.9	90	0.070	98	100	13.6	-0.077942	214	225	262	242	293	247	433	164	83	64	84	63	77	-0.035	7.19	2.63
93	13.752	14.519	0.15	0.16	1.81	78	-9.32	1.40	78	-1.8	90	0.070	100	100	13.5	-0.049408	215	225	262	241	293	247	436	164	83	64	84	63	76	-0.034	7.24	2.67
94	13.901	14.676	0.15	0.16	1.77	78	-9.63	1.39	78	-1.8	90	0.070	100	100	13.5	-0.067901	216	225	261	241	293	247	441	164	83	64	84	63	76	-0.034	7.27	2.67
95	14.050	14.833	0.15	0.16	1.76	78	-10.01	1.39	78	-2.1	90	0.070	100	100	13.4	-0.039673	217	225	261	240	294	247	446	165	83	64	84	63	77	-0.035	7.32	2.68
96	14.198	14.989	0.15	0.16	1.75	78	-10.28	1.39	78	-1.9	90	0.070	99	99	13.3	-0.071137	218	225	260	239	294	247	487	165	83	64	84	63	77	-0.035	7.35	2.67
97	14.346	15.146	0.15	0.16	1.77	78	-10.91	1.38	78	-2.1	90	0.070	99	100	13.3	-0.069427	224	224	260	239	294	248	593	167	83	64	84	63	76	-0.034	7.58	2.57
98	14.495	15.302	0.15	0.16	1.82	78	-11.56	1.38	78	-1.9	90	0.070	100	99	13.2	-0.068604	233	224	259	238	294	250	570	169	83	64	84	63	78	-0.034	8.28	2.4
99	14.643	15.458	0.15	0.16	1.73	78	-11.65	1.37	78	-1.9	90	0.070	99	99	13.1	-0.063659	244	224	259	238	294	252	658	172	83	64	84	63	77	-0.035	9.25	2.18
100	14.792	15.614	0.15	0.16	1.76	79	-12.15	1.37	78	-2	90	0.070	100	99	13.1	-0.089447	260	224	258	238	295	255	755	176	83	64	84	63	77	-0.037	10.07	1.85
101	14.939	15.771	0.15	0.16	1.71	79	-12.4	1.39	78	-2.1	90	0.070	98	100	13.0	-0.062683	271	224	258	237	295	257	825	183	83	64	84	63	77	-0.038	11.15	1.34
102	15.091	15.928	0.15	0.16	1.84	79	-1.23	1.42	78	-2.2	90	0.070	102	100	12.9	-0.067231	285	224	257	237	295	260	866	191	83	64	84	63	77	-0.040	12.22	0.74
103	15.241	16.087	0.15	0.16	1.82	79	-1.1	1.41	78	-2.1	91	0.070	100	101	12.9	-0.058838	300	224	257	236	295	262	889	198	84	64	84	63	78	-0.041	12.83	0.31
104	15.391	16.244	0.15	0.16	1.83	79	-1.27	1.41	78	-2	91	0.060	108	108	12.8	-0.07843	315	225	256	236	295	265	904	203	85	64	84	63	77	-0.042	12.73	0.19

Wood Heater Test Data
Low Burn Emissions Data

Run: 4

Manufacturer: Kuma Stoves
Model: Aspen LE
Tracking No.: 2357
Project No.: 0123WM011E
Test Date: 26-Feb-19
Beginning Clock Time: 15:13

Total Sampling Time: 605 min
Recording Interval: 1 min
Background Sample Volume: 89.485 cubic feet

Meter Box Y Factor: 1.009 (1) 0.996 (2) 0.996 (Amb)

Barometric Pressure:	Begin	Middle	End	Average	
	28.33	28.37	28.41	28.37	0

OMNI Equipment Numbers:

PM Control Modules: 371, 372
Dilution Tunnel MW(dry): 29.00 lb/lb-mole
Dilution Tunnel MW(wet): 28.78 lb/lb-mole
Dilution Tunnel H2O: 2.00 percent
Dilution Tunnel Static: -0.110 "H2O
Tunnel Area: 0.19635 ft2
Pitot Tube Cp: 0.99

Avg. Tunnel Velocity: 18.35 ft/sec.
Initial Tunnel Flow: 193.2 scfm
Average Tunnel Flow: 193.0 scfm
Post-Test Leak Check (1): 0.000 cfm @ 9 in. Hg
Post-Test Leak Check (2): 0.000 cfm @ 10 in. Hg
Average Test Piece Fuel Moisture: 20.37 Dry Basis %

Technician Signature:

Velocity Traverse Data	Pt.1	Pt.2	Pt.3	Pt.4	Pt.5	Pt.6	Pt.7	Pt.8	Center	
Initial dP	0.068	0.074	0.072	0.070	0.070	0.074	0.068	0.066	0.070	"H2O
Temp:	92	92	91	91	91	91	91	91	92	°F

V_{strav} 18.44 ft/sec V_{scent} 18.43 ft/sec F_p 1.001

	Particulate Sampling Data														Fuel Weight (lb)		Temperature Data (°F)													Stack Gas Data		
Elapsed Time (min)	Gas Meter 1 (ft^3)	Gas Meter 2 (ft^3)	Sample Rate 1 (cfm)	Sample Rate 2 (cfm)	Orifice dH 1 ("H_2O)	Meter 1 Temp (°F)	Meter 1 Vacuum ("Hg)	Orifice dH 2 ("H_2O)	Meter 2 Temp (°F)	Meter 2 Vacuum ("Hg)	Dilution Tunnel (°F)	Dilution Tunnel Center dP	Pro. Rate 1	Pro. Rate 2	Scale Reading	Weight Change	Firebox Top	Firebox Bottom	Firebox Back	Firebox Left	Firebox Right	Avg. Stove Surface	Catalyst Exit	Stack	Filter 1	Dryer Exit 1	Filter 2	Dryer Exit 2	Ambient	Draft ("H_2O)	CO_2 (%)	CO (%)
105	15.541	16.402	0.15	0.16	1.81	79	-0.98	1.41	78	-2.2	91	0.070	100	100	12.7	-0.052887	329	225	256	236	296	268	917	207	85	64	84	63	78	-0.043	12.75	0.17
106	15.691	16.560	0.15	0.16	1.80	79	-1.38	1.40	78	-2	91	0.070	100	100	12.6	-0.091247	342	225	255	235	296	271	930	211	85	64	84	63	79	-0.044	12.79	0.16
107	15.841	16.718	0.15	0.16	1.80	79	-1.29	1.40	78	-2	92	0.070	100	101	12.6	-0.040283	355	226	255	235	296	273	945	215	86	64	84	63	77	-0.044	12.89	0.16
108	15.991	16.876	0.15	0.16	1.81	79	-1.38	1.40	78	-2.2	92	0.070	100	101	12.5	-0.079194	368	226	254	235	297	276	960	217	86	64	84	63	78	-0.045	13.04	0.16
109	16.141	17.033	0.15	0.16	1.80	79	-1.29	1.41	78	-2	92	0.070	100	100	12.5	-0.070953	381	227	254	235	297	279	973	221	86	64	84	63	77	-0.045	13.07	0.16
110	16.290	17.190	0.15	0.16	1.81	79	-1.35	1.41	78	-2.2	92	0.070	100	100	12.4	-0.089355	394	228	254	235	298	282	986	225	86	64	84	63	77	-0.046	13.18	0.15
111	16.439	17.348	0.15	0.16	1.81	79	-1.1	1.40	78	-2.2	92	0.070	100	101	12.3	-0.069184	406	228	253	235	298	284	997	229	86	64	84	63	78	-0.047	13.26	0.15
112	16.589	17.506	0.15	0.16	1.81	79	-1.06	1.40	78	-1.9	92	0.070	100	101	12.2	-0.054107	417	229	253	235	299	287	1008	231	86	64	84	63	78	-0.047	13.33	0.15
113	16.738	17.664	0.15	0.16	1.80	79	-1.27	1.39	78	-2.1	93	0.070	100	101	12.2	-0.074402	429	230	253	235	299	289	1018	234	86	64	84	63	79	-0.048	13.41	0.15
114	16.888	17.821	0.15	0.16	1.80	79	-1.38	1.39	78	-2.2	93	0.070	100	100	12.1	-0.070496	440	231	252	235	300	292	1027	238	86	64	84	64	78	-0.048	13.49	0.15
115	17.038	17.978	0.15	0.16	1.79	79	-1.32	1.40	78	-1.9	93	0.070	100	100	12.0	-0.07254	450	232	252	235	301	294	1035	240	86	64	84	64	78	-0.048	13.54	0.15
116	17.187	18.135	0.15	0.16	1.79	79	-1.3	1.39	78	-2.1	93	0.070	100	100	11.9	-0.080628	460	233	252	236	301	296	1044	241	85	64	84	64	78	-0.049	13.68	0.15
117	17.337	18.292	0.15	0.16	1.80	79	-1.16	1.40	78	-2	93	0.070	100	100	11.9	-0.074646	470	234	252	236	302	299	1053	243	85	64	84	64	78	-0.049	13.71	0.16
118	17.486	18.449	0.15	0.16	1.81	79	-1.08	1.39	78	-2	94	0.070	100	100	11.8	-0.071319	479	234	251	236	303	301	1059	247	85	64	84	64	77	-0.050	13.73	0.16
119	17.635	18.607	0.15	0.16	1.80	79	-1.39	1.39	78	-2	94	0.070	100	101	11.7	-0.063996	487	235	251	237	304	303	1063	249	85	64	84	64	77	-0.050	13.82	0.16
120	17.783	18.764	0.15	0.16	1.80	79	-1.24	1.39	78	-2.1	94	0.070	99	100	11.7	-0.081482	496	236	251	237	305	305	1070	250	85	64	84	64	78	-0.050	14	0.16
121	17.933	18.921	0.15	0.16	1.81	79	-1.4	1.39	78	-2.2	94	0.070	101	100	11.6	-0.091033	504	237	251	238	305	307	1078	252	85	64	84	64	77	-0.050	14.15	0.16
122	18.082	19.077	0.15	0.16	1.80	79	-0.94	1.39	78	-2	94	0.070	100	99	11.5	-0.103363	511	238	250	238	306	309	1079	255	85	64	84	64	77	-0.051	14.27	0.16
123	18.231	19.234	0.15	0.16	1.80	79	-0.94	1.39	78	-2.1	94	0.070	100	100	11.4	-0.059968	516	239	250	239	307	310	1062	257	85	64	84	64	78	-0.052	14.32	0.14
124	18.380	19.391	0.15	0.16	1.78	79	-1.24	1.39	78	-2	95	0.060	108	108	11.3	-0.086181	519	240	250	239	308	311	1047	259	85	64	85	64	78	-0.051	14.42	0.12
125	18.529	19.548	0.15	0.16	1.78	79	-1.37	1.38	78	-2.2	95	0.060	108	108	11.2	-0.086273	521	242	250	240	309	312	1037	260	85	64	85	64	77	-0.051	14.77	0.11
126	18.678	19.705	0.15	0.16	1.78	79	-1.38	1.39	78	-2	95	0.070	100	100	11.1	-0.093476	522	243	249	241	310	313	1017	262	85	64	85	64	79	-0.052	15.52	0.19
127	18.828	19.861	0.15	0.16	1.78	79	-1.22	1.38	78	-2.2	95	0.070	101	100	11.0	-0.092621	522	244	249	242	311	314	1005	264	85	64	85	64	78	-0.053	16.16	0.49
128	18.977	20.018	0.15	0.16	1.80	79	-1.1	1.39	78	-2.1	95	0.070	100	100	10.9	-0.140472	523	245	249	243	313	315	1001	266	85	64	85	64	78	-0.054	16.53	0.93
129	19.126	20.174	0.15	0.16	1.79	79	-1.13	1.38	79	-2.1	96	0.070	100	99	10.8	-0.096161	525	246	249	244	314	316	996	269	85	64	85	64	78	-0.054	16.64	1.47
130	19.274	20.331	0.15	0.16	1.80	79	-1.38	1.38	79	-2	96	0.060	107	108	10.7	-0.082031	527	247	249	246	315	317	986	270	85	64	85	64	78	-0.055	16.44	1.9
131	19.422	20.487	0.15	0.16	1.80	79	-1.04	1.39	79	-2.2	96	0.070	99	99	10.6	-0.09964	529	248	249	248	317	318	982	270	85	64	85	64	79	-0.055	16.35	1.97
132	19.571	20.643	0.15	0.16	1.79	79	-1.06	1.38	79	-2	97	0.070	100	99	10.5	-0.120331	530	249	249	250	318	319	977	271	85	64	85	64	79	-0.054	16.37	1.92
133	19.720	20.799	0.15	0.16	1.79	79	-1.39	1.38	79	-2	96	0.070	100	99	10.4	-0.098266	532	250	249	252	320	321	969	271	85	64	85	64	78	-0.052	16.42	2
134	19.869	20.956	0.15	0.16	1.80	79	-0.99	1.38	79	-2.2	96	0.070	100	100	10.3	-0.096039	534	251	249	254	321	322	966	271	85	64	85	64	77	-0.053	16.35	1.85
135	20.018	21.111	0.15	0.16	1.79	79	-1.35	1.38	79	-2	96	0.070	100	99	10.2	-0.132843	535	252	249	256	323	323	961	270	85	64	85	64	78	-0.052	16.41	2.07
136	20.167	21.268	0.15	0.16	1.79	79	-1.31	1.37	79	-2	97	0.070	100	100	10.1	-0.092194	536	253	249	258	324	324	961	270	85	64	85	64	78	-0.054	16.31	2.04
137	20.316	21.424	0.15	0.16	1.78	79	-1.17	1.38	79	-2	97	0.070	100	99	10.0	-0.097748	538	254	249	261	325	325	952	270	85	64	85	64	78	-0.054	16.34	2.12
138	20.465	21.580	0.15	0.16	1.78	79	-0.96	1.37	79	-2	97	0.070	100	99	9.9	-0.078338	539	255	249	263	327	327	944	269	85	64	85	64	78	-0.054	16.27	2.21
139	20.615	21.736	0.15	0.16	1.78	79	-1.37	1.37	79	-2	96	0.070	101	99	9.8	-0.105561	539	256	249	266	328	328	936	266	85	64	85	64	79	-0.053	16.21	1.91

Wood Heater Test Data
Low Burn Emissions Data

Run: 4

Manufacturer: Kuma Stoves
Model: Aspen LE
Tracking No.: 2357
Project No.: 0123WM011E
Test Date: 26-Feb-19
Beginning Clock Time: 15:13

Total Sampling Time: 605 min
Recording Interval: 1 min
Background Sample Volume: 89.485 cubic feet

Meter Box Y Factor: 1.009 (1) 0.996 (2) 0.996 (Amb)

Barometric Pressure:	Begin	Middle	End	Average
	28.33	28.37	28.41	28.37 0

OMNI Equipment Numbers:

PM Control Modules: 371, 372
Dilution Tunnel MW(dry): 29.00 lb/lb-mole
Dilution Tunnel MW(wet): 28.78 lb/lb-mole
Dilution Tunnel H2O: 2.00 percent
Dilution Tunnel Static: -0.110 "H2O
Tunnel Area: 0.19635 ft2
Pitot Tube Cp: 0.99

Avg. Tunnel Velocity: 18.35 ft/sec.
Initial Tunnel Flow: 193.2 scfm
Average Tunnel Flow: 193.0 scfm
Post-Test Leak Check (1): 0.000 cfm @ 9 in. Hg
Post-Test Leak Check (2): 0.000 cfm @ 10 in. Hg
Average Test Piece Fuel Moisture: 20.37 Dry Basis %

Technician Signature:

Velocity Traverse Data	Pt.1	Pt.2	Pt.3	Pt.4	Pt.5	Pt.6	Pt.7	Pt.8	Center	
Initial dP	0.068	0.074	0.072	0.070	0.070	0.074	0.068	0.066	0.070	"H2O
Temp:	92	92	91	91	91	91	91	91	92	°F

V_{strav} 18.44 ft/sec V_{scent} 18.43 ft/sec F_p 1.001

	Particulate Sampling Data														Fuel Weight (lb)		Temperature Data (°F)													Stack Gas Data		
Elapsed Time (min)	Gas Meter 1 (ft^3)	Gas Meter 2 (ft^3)	Sample Rate 1 (cfm)	Sample Rate 2 (cfm)	Orifice dH 1 ("H_2O)	Meter 1 Temp (°F)	Meter 1 Vacuum ("Hg)	Orifice dH 2 ("H_2O)	Meter 2 Temp (°F)	Meter 2 Vacuum ("Hg)	Dilution Tunnel (°F)	Dilution Tunnel Center dP	Pro. Rate 1	Pro. Rate 2	Scale Reading	Weight Change	Firebox Top	Firebox Bottom	Firebox Back	Firebox Left	Firebox Right	Avg. Stove Surface	Catalyst Exit	Stack	Filter 1	Dryer Exit 1	Filter 2	Dryer Exit 2	Ambient	Draft ("H_2O)	CO_2 (%)	CO (%)
140	20.764	21.891	0.15	0.15	1.79	79	-1.4	1.36	79	-2.1	96	0.070	100	99	9.7	-0.081543	540	257	249	268	330	329	939	263	85	64	85	64	79	-0.051	16.16	1.3
141	20.913	22.047	0.15	0.16	1.79	79	-1.29	1.37	79	-2.1	96	0.070	100	99	9.6	-0.096313	541	258	249	270	331	330	956	261	85	64	85	64	79	-0.051	16.24	0.71
142	21.062	22.203	0.15	0.16	1.80	79	-1.41	1.40	79	-2.3	96	0.070	100	99	9.6	-0.052307	543	259	249	273	333	331	955	260	85	64	85	64	79	-0.051	16.25	0.31
143	21.211	22.362	0.15	0.16	1.80	79	-1.1	1.40	79	-2.2	96	0.060	108	109	9.5	-0.088806	545	261	249	275	334	333	956	259	85	64	85	64	78	-0.049	16.26	0.15
144	21.360	22.519	0.15	0.16	1.80	79	-1.03	1.41	79	-2.1	96	0.070	100	100	9.4	-0.049652	547	262	250	277	335	334	948	258	85	64	85	64	78	-0.050	16.05	0.11
145	21.509	22.677	0.15	0.16	1.79	79	-1.42	1.40	79	-2.3	96	0.070	100	101	9.3	-0.100373	548	263	250	280	337	336	945	257	85	64	85	64	78	-0.050	15.9	0.09
146	21.658	22.835	0.15	0.16	1.79	79	-0.97	1.41	79	-2.3	96	0.060	108	109	9.3	-0.078613	550	264	250	282	338	337	950	256	85	64	85	64	79	-0.051	16.14	0.15
147	21.808	22.993	0.15	0.16	1.79	79	-1.08	1.40	79	-2.2	97	0.060	109	109	9.2	-0.063171	552	265	250	284	339	338	956	255	85	64	85	64	79	-0.050	16.18	0.17
148	21.957	23.151	0.15	0.16	1.78	79	-1.36	1.40	79	-2.4	96	0.060	108	109	9.1	-0.069611	553	266	250	286	340	339	954	255	85	64	85	64	77	-0.050	16.23	0.18
149	22.106	23.308	0.15	0.16	1.80	79	-1.11	1.41	79	-2.4	96	0.060	108	108	9.1	-0.063232	554	267	250	288	342	340	946	254	85	64	85	64	79	-0.050	16.25	0.19
150	22.255	23.466	0.15	0.16	1.80	79	-1.41	1.40	79	-2.3	96	0.070	100	101	9.0	-0.100586	554	268	250	290	343	341	944	253	85	64	85	64	78	-0.049	15.8	0.08
151	22.405	23.624	0.15	0.16	1.78	79	-1.22	1.41	79	-2.2	97	0.070	101	101	8.9	-0.09842	555	270	250	292	345	342	952	253	85	64	85	64	78	-0.050	15.7	0.08
152	22.554	23.782	0.15	0.16	1.81	79	-1.42	1.40	79	-2.3	97	0.070	100	101	8.8	-0.021789	556	271	250	294	346	343	948	252	85	64	85	64	79	-0.049	15.28	0.07
153	22.702	23.940	0.15	0.16	1.81	79	-0.93	1.40	79	-2.3	96	0.070	99	101	8.7	-0.08905	557	272	251	296	347	345	964	251	85	64	85	64	79	-0.049	15.08	0.07
154	22.852	24.097	0.15	0.16	1.79	79	-1.2	1.41	79	-2.1	96	0.060	109	108	8.7	-0.056092	560	273	251	297	349	346	986	251	85	64	85	64	78	-0.050	15.23	0.07
155	23.001	24.255	0.15	0.16	1.80	79	-1.26	1.40	79	-2.2	97	0.070	100	101	8.6	-0.045807	562	275	251	299	350	347	984	252	85	64	85	64	78	-0.049	15.42	0.08
156	23.150	24.413	0.15	0.16	1.80	79	-1.21	1.41	79	-2.2	96	0.070	100	101	8.6	-0.07257	564	276	251	300	351	348	975	252	85	64	85	64	78	-0.050	15.6	0.08
157	23.299	24.571	0.15	0.16	1.79	79	-1.39	1.40	79	-2.2	97	0.070	100	101	8.5	-0.063935	563	278	251	301	352	349	956	252	85	64	85	64	78	-0.049	15.74	0.09
158	23.448	24.729	0.15	0.16	1.78	79	-0.99	1.41	79	-2.2	96	0.070	100	101	8.4	-0.085602	562	280	251	302	354	350	949	252	85	64	85	64	78	-0.049	15.7	0.08
159	23.598	24.886	0.15	0.16	1.79	79	-1.41	1.41	79	-2.2	97	0.070	101	100	8.4	-0.038024	561	281	252	303	355	350	950	251	85	64	85	64	79	-0.049	15.6	0.07
160	23.747	25.044	0.15	0.16	1.79	79	-0.94	1.40	79	-2.3	96	0.070	100	101	8.3	-0.071259	561	283	252	304	356	351	949	250	85	64	85	64	79	-0.049	15.36	0.08
161	23.897	25.201	0.15	0.16	1.80	79	-0.98	1.40	79	-2.4	97	0.070	101	100	8.2	-0.063782	561	285	252	305	357	352	948	250	85	64	85	64	79	-0.048	15.33	0.07
162	24.045	25.359	0.15	0.16	1.81	79	-1.11	1.40	79	-2.3	97	0.070	100	101	8.2	-0.045166	561	287	252	306	358	353	951	249	85	64	85	65	78	-0.049	14.8	0.07
163	24.194	25.517	0.15	0.16	1.81	79	-1.27	1.40	79	-2.1	97	0.070	100	101	8.1	-0.06192	560	289	252	307	359	353	948	248	85	64	85	64	78	-0.049	14.72	0.06
164	24.343	25.675	0.15	0.16	1.80	79	-1.41	1.41	79	-2.4	97	0.070	100	101	8.1	-0.043213	558	290	252	308	360	354	943	247	85	64	85	64	78	-0.049	14.67	0.06
165	24.492	25.833	0.15	0.16	1.80	79	-1.42	1.40	79	-2.1	97	0.070	100	101	8.0	-0.082	556	292	253	309	361	354	941	247	85	64	85	64	78	-0.049	14.48	0.06
166	24.642	25.990	0.15	0.16	1.79	79	-1.28	1.41	79	-2.3	97	0.070	101	100	8.0	-0.047547	555	294	253	310	362	355	929	246	85	64	85	64	77	-0.048	14.48	0.06
167	24.791	26.148	0.15	0.16	1.79	79	-0.98	1.40	79	-2.2	97	0.070	100	101	7.9	-0.050201	553	295	253	310	363	355	927	245	85	64	85	64	79	-0.049	14.27	0.06
168	24.940	26.306	0.15	0.16	1.79	80	-1.27	1.40	79	-2.4	96	0.070	100	101	7.9	-0.061798	551	297	254	311	364	355	929	244	85	65	85	64	77	-0.048	14.27	0.06
169	25.089	26.463	0.15	0.16	1.78	80	-1.15	1.41	79	-2.3	97	0.070	100	100	7.8	-0.074616	550	298	254	312	365	356	935	243	85	65	85	64	79	-0.048	14.29	0.06
170	25.239	26.621	0.15	0.16	1.78	80	-0.99	1.40	79	-2.1	96	0.070	101	101	7.7	-0.049438	548	300	254	313	366	356	938	243	85	65	85	64	78	-0.047	14.18	0.06
171	25.388	26.779	0.15	0.16	1.80	80	-1.1	1.41	79	-2.1	96	0.070	100	101	7.7	-0.058655	548	301	255	314	367	357	942	242	85	65	85	64	78	-0.047	14.03	0.06
172	25.538	26.937	0.15	0.16	1.80	80	-1.23	1.40	79	-2.3	96	0.060	109	109	7.7	-0.021332	546	303	255	314	368	357	938	242	85	65	85	64	78	-0.047	13.89	0.06
173	25.686	27.095	0.15	0.16	1.81	80	-1.13	1.40	79	-2.3	96	0.070	99	101	7.6	-0.053284	545	304	255	315	368	357	933	242	85	65	85	64	78	-0.046	13.71	0.06
174	25.835	27.252	0.15	0.16	1.80	80	-1.21	1.41	79	-2.4	96	0.070	100	100	7.5	-0.056762	541	305	256	315	369	357	914	240	85	65	85	64	78	-0.046	13.68	0.06

Wood Heater Test Data
Low Burn Emissions Data

Run: 4

Manufacturer: Kuma Stoves
Model: Aspen LE
Tracking No.: 2357
Project No.: 0123WM011E
Test Date: 26-Feb-19
Beginning Clock Time: 15:13

Total Sampling Time: 605 min
Recording Interval: 1 min
Background Sample Volume: 89.485 cubic feet

Meter Box Y Factor: 1.009 (1) 0.996 (2) 0.996 (Amb)

Barometric Pressure:	Begin	Middle	End	Average
	28.33	28.37	28.41	28.37 0

OMNI Equipment Numbers:

PM Control Modules: 371, 372
Dilution Tunnel MW(dry): 29.00 lb/lb-mole
Dilution Tunnel MW(wet): 28.78 lb/lb-mole
Dilution Tunnel H2O: 2.00 percent
Dilution Tunnel Static: -0.110 "H2O
Tunnel Area: 0.19635 ft2
Pitot Tube Cp: 0.99

Avg. Tunnel Velocity: 18.35 ft/sec.
Initial Tunnel Flow: 193.2 scfm
Average Tunnel Flow: 193.0 scfm
Post-Test Leak Check (1): 0.000 cfm @ 9 in. Hg
Post-Test Leak Check (2): 0.000 cfm @ 10 in. Hg
Average Test Piece Fuel Moisture: 20.37 Dry Basis %

Technician Signature:

Velocity Traverse Data	Pt.1	Pt.2	Pt.3	Pt.4	Pt.5	Pt.6	Pt.7	Pt.8	Center	
Initial dP	0.068	0.074	0.072	0.070	0.070	0.074	0.068	0.066	0.070	"H2O
Temp:	92	92	91	91	91	91	91	91	92	°F

V_{strav} 18.44 ft/sec V_{scent} 18.43 ft/sec F_p 1.001

	Particulate Sampling Data														Fuel Weight (lb)		Temperature Data (°F)													Stack Gas Data		
Elapsed Time (min)	Gas Meter 1 (ft^3)	Gas Meter 2 (ft^3)	Sample Rate 1 (cfm)	Sample Rate 2 (cfm)	Orifice dH 1 ("H_2O)	Meter 1 Temp (°F)	Meter 1 Vacuum ("Hg)	Orifice dH 2 ("H_2O)	Meter 2 Temp (°F)	Meter 2 Vacuum ("Hg)	Dilution Tunnel (°F)	Dilution Tunnel Center dP	Pro. Rate 1	Pro. Rate 2	Scale Reading	Weight Change	Firebox Top	Firebox Bottom	Firebox Back	Firebox Left	Firebox Right	Avg. Stove Surface	Catalyst Exit	Stack	Filter 1	Dryer Exit 1	Filter 2	Dryer Exit 2	Ambient	Draft ("H_2O)	CO_2 (%)	CO (%)
175	25.985	27.410	0.15	0.16	1.80	80	-1.18	1.40	79	-2.2	96	0.070	101	101	7.5	-0.022187	537	306	256	316	370	357	901	238	85	65	85	64	78	-0.046	13.48	0.06
176	26.134	27.568	0.15	0.16	1.79	80	-1	1.41	79	-2.1	96	0.070	100	101	7.5	-0.065399	533	307	257	316	370	357	886	236	85	65	85	64	78	-0.045	13.32	0.06
177	26.283	27.726	0.15	0.16	1.79	80	-1.21	1.40	79	-2.2	96	0.070	100	101	7.4	-0.052887	529	308	257	317	371	356	879	235	85	65	85	64	78	-0.047	13.12	0.06
178	26.433	27.884	0.15	0.16	1.79	80	-0.94	1.41	79	-2.2	96	0.070	101	101	7.4	-0.025421	524	309	257	317	371	356	872	233	85	65	85	64	78	-0.045	12.92	0.05
179	26.582	28.042	0.15	0.16	1.79	80	-1.31	1.41	79	-2.1	96	0.070	100	101	7.3	-0.049927	520	309	258	318	372	355	869	231	85	65	85	64	78	-0.044	12.75	0.06
180	26.732	28.200	0.15	0.16	1.81	80	-1.33	1.40	79	-2.4	96	0.070	101	101	7.3	-0.036804	516	310	259	318	372	355	864	229	85	65	85	64	78	-0.044	12.51	0.05
181	26.882	28.358	0.15	0.16	1.81	80	-0.97	1.41	79	-2.2	95	0.060	109	109	7.2	-0.067322	512	310	259	318	373	354	854	227	85	65	85	64	77	-0.043	12.18	0.05
182	27.031	28.516	0.15	0.16	1.81	80	-1.27	1.41	79	-2.3	95	0.060	108	109	7.2	0.00705	507	311	260	319	373	354	849	226	85	65	85	64	77	-0.043	12.07	0.05
183	27.179	28.674	0.15	0.16	1.81	80	-1.1	1.40	79	-2.1	96	0.070	99	101	7.2	-0.052521	503	311	260	319	373	353	846	225	85	65	85	64	77	-0.044	12.08	0.05
184	27.329	28.831	0.15	0.16	1.81	80	-0.96	1.41	79	-2.3	96	0.070	101	100	7.1	-0.04187	499	311	260	319	374	353	842	224	85	65	85	64	79	-0.043	11.99	0.05
185	27.479	28.990	0.15	0.16	1.80	80	-0.93	1.40	79	-2.2	95	0.070	100	101	7.1	-0.040283	495	311	261	319	375	352	838	223	85	65	85	64	78	-0.043	11.96	0.05
186	27.628	29.148	0.15	0.16	1.79	80	-1.41	1.41	79	-2.3	95	0.070	100	101	7.0	-0.051514	491	312	262	319	374	352	834	222	85	65	85	64	78	-0.042	11.97	0.05
187	27.777	29.306	0.15	0.16	1.79	80	-1.06	1.39	79	-2.3	95	0.070	100	101	7.0	-0.028076	487	312	262	319	375	351	831	220	85	65	85	64	78	-0.042	11.91	0.05
188	27.927	29.464	0.15	0.16	1.79	80	-1.41	1.41	79	-2.1	95	0.070	100	101	7.0	-0.028595	483	312	263	319	375	350	827	220	85	65	85	64	78	-0.041	11.87	0.05
189	28.077	29.622	0.15	0.16	1.80	80	-0.93	1.42	79	-2.2	95	0.070	100	101	6.9	-0.041717	479	312	264	319	375	350	823	219	85	65	85	64	78	-0.041	11.87	0.05
190	28.226	29.780	0.15	0.16	1.80	80	-0.99	1.40	79	-2.4	95	0.070	100	101	6.9	-0.020325	476	312	264	319	375	349	819	217	85	65	85	64	78	-0.041	11.88	0.05
191	28.376	29.938	0.15	0.16	1.80	80	-1.12	1.41	80	-2.3	95	0.070	100	100	6.9	-0.0719	472	312	265	319	376	349	815	216	85	65	85	64	77	-0.041	11.85	0.05
192	28.525	30.097	0.15	0.16	1.81	80	-1.38	1.41	80	-2.2	95	0.070	100	101	6.8	-0.041198	469	312	265	318	376	348	811	216	85	65	85	64	78	-0.041	11.83	0.05
193	28.674	30.254	0.15	0.16	1.80	80	-1.25	1.41	80	-2.1	94	0.070	100	100	6.8	-0.008728	466	313	266	318	376	348	809	215	85	65	85	64	77	-0.041	11.75	0.05
194	28.824	30.412	0.15	0.16	1.81	80	-0.94	1.41	80	-2.1	94	0.070	100	100	6.8	-0.051239	463	313	267	318	377	348	806	214	85	65	85	64	77	-0.041	11.69	0.05
195	28.973	30.571	0.15	0.16	1.80	80	-1.31	1.41	80	-2.4	94	0.070	100	101	6.7	-0.013794	460	313	267	318	377	347	802	213	85	65	85	64	77	-0.040	11.66	0.05
196	29.122	30.729	0.15	0.16	1.80	80	-1.16	1.41	79	-2.3	94	0.070	100	101	6.7	-0.023926	457	313	268	318	377	347	796	212	85	65	85	64	77	-0.040	11.69	0.04
197	29.272	30.887	0.15	0.16	1.79	80	-0.93	1.42	80	-2.1	94	0.070	100	100	6.7	-0.049255	454	313	269	317	378	346	791	211	85	65	85	64	77	-0.040	11.64	0.04
198	29.422	31.045	0.15	0.16	1.79	80	-0.96	1.40	80	-2.2	94	0.070	100	100	6.6	-0.032074	451	313	269	317	378	346	785	210	85	65	85	64	79	-0.040	11.66	0.04
199	29.572	31.204	0.15	0.16	1.81	80	-1.18	1.41	80	-2.2	94	0.070	100	101	6.6	-0.045014	448	313	270	317	378	345	780	209	85	65	85	64	78	-0.039	11.59	0.04
200	29.722	31.362	0.15	0.16	1.80	80	-1.05	1.40	80	-2.3	94	0.070	100	100	6.6	-0.025696	445	313	271	317	379	345	774	209	85	65	85	64	77	-0.039	11.59	0.04
201	29.870	31.520	0.15	0.16	1.81	80	-0.98	1.41	80	-2.1	94	0.070	99	100	6.5	-0.027374	442	314	271	317	379	345	770	207	85	65	85	64	77	-0.039	11.5	0.04
202	30.020	31.678	0.15	0.16	1.81	80	-1.24	1.42	80	-2.1	94	0.070	100	100	6.5	-0.023468	439	314	272	316	379	344	768	207	85	65	85	64	78	-0.039	11.48	0.04
203	30.169	31.836	0.15	0.16	1.81	80	-1.4	1.41	80	-2.3	94	0.070	100	100	6.5	-0.037323	436	314	272	316	380	344	765	206	85	65	85	64	79	-0.039	11.51	0.04
204	30.319	31.995	0.15	0.16	1.79	80	-1.35	1.41	80	-2.2	93	0.070	100	101	6.4	-0.039825	434	314	273	316	380	343	761	204	85	65	85	64	78	-0.039	11.47	0.04
205	30.469	32.153	0.15	0.16	1.80	80	-0.96	1.41	80	-2.3	93	0.070	100	100	6.4	-0.042817	431	315	274	316	380	343	757	203	85	65	85	64	78	-0.038	11.46	0.04
206	30.619	32.311	0.15	0.16	1.79	80	-1	1.40	80	-2.2	93	0.070	100	100	6.4	-0.018096	428	315	275	316	381	343	753	203	85	65	85	64	77	-0.038	11.46	0.04
207	30.769	32.469	0.15	0.16	1.80	80	-1.38	1.41	80	-2.1	93	0.070	100	100	6.4	-0.019471	425	315	275	316	381	342	749	202	85	65	85	64	78	-0.038	11.39	0.04
208	30.918	32.628	0.15	0.16	1.79	80	-0.92	1.41	80	-2.1	93	0.070	100	101	6.3	-0.008484	423	316	276	315	381	342	745	202	85	65	85	64	78	-0.037	11.34	0.04
209	31.068	32.786	0.15	0.16	1.78	80	-0.99	1.41	80	-2.3	93	0.070	100	100	6.3	-0.046814	420	316	277	315	381	342	742	201	85	65	85	64	77	-0.037	11.36	0.03

Wood Heater Test Data
Low Burn Emissions Data

Run: 4

Manufacturer: Kuma Stoves
Model: Aspen LE
Tracking No.: 2357
Project No.: 0123WM011E
Test Date: 26-Feb-19
Beginning Clock Time: 15:13

Total Sampling Time: 605 min
Recording Interval: 1 min
Background Sample Volume: 89.485 cubic feet

Meter Box Y Factor: 1.009 (1) 0.996 (2) 0.996 (Amb)

Barometric Pressure:	Begin	Middle	End	Average
	28.33	28.37	28.41	28.37 0

OMNI Equipment Numbers:

PM Control Modules: 371, 372
Dilution Tunnel MW(dry): 29.00 lb/lb-mole
Dilution Tunnel MW(wet): 28.78 lb/lb-mole
Dilution Tunnel H2O: 2.00 percent
Dilution Tunnel Static: -0.110 "H2O
Tunnel Area: 0.19635 ft2
Pitot Tube Cp: 0.99

Avg. Tunnel Velocity: 18.35 ft/sec.
Initial Tunnel Flow: 193.2 scfm
Average Tunnel Flow: 193.0 scfm
Post-Test Leak Check (1): 0.000 cfm @ 9 in. Hg
Post-Test Leak Check (2): 0.000 cfm @ 10 in. Hg
Average Test Piece Fuel Moisture: 20.37 Dry Basis %

Technician Signature:

Velocity Traverse Data	Pt.1	Pt.2	Pt.3	Pt.4	Pt.5	Pt.6	Pt.7	Pt.8	Center	
Initial dP	0.068	0.074	0.072	0.070	0.070	0.074	0.068	0.066	0.070	"H2O
Temp:	92	92	91	91	91	91	91	91	92	°F

V_{strav} 18.44 ft/sec V_{scent} 18.43 ft/sec F_p 1.001

	Particulate Sampling Data														Fuel Weight (lb)		Temperature Data (°F)												Stack Gas Data		
Elapsed Time (min)	Gas Meter 1 (ft^3)	Gas Meter 2 (ft^3)	Sample Rate 1 (cfm)	Sample Rate 2 (cfm)	Orifice dH 1 ("H_2O)	Meter 1 Temp (°F)	Meter 1 Vacuum ("Hg)	Orifice dH 2 ("H_2O)	Meter 2 Temp (°F)	Meter 2 Vacuum ("Hg)	Dilution Tunnel (°F)	Dilution Tunnel Center dP	Pro. Rate 1	Pro. Rate 2	Scale Reading	Weight Change	Firebox Top	Firebox Bottom	Firebox Back	Firebox Left	Firebox Right	Avg. Stove Surface	Catalyst Exit	Stack	Filter 1	Dryer Exit 1	Filter 2	Dryer Exit 2	Ambient	Draft ("H_2O)	CO_2 (%)	CO (%)
210	31.216	32.944	0.15	0.16	1.81	80	-1.36	1.42	80	-2.2	93	0.070	99	100	6.3	-0.025329	418	317	277	315	382	342	737	200	85	65	85	64	79	-0.037	11.24	0.03
211	31.366	33.102	0.15	0.16	1.81	80	-1.37	1.41	80	-2.1	92	0.070	100	100	6.2	-0.032562	415	317	278	315	382	341	732	199	85	65	85	64	79	-0.037	11.3	0.03
212	31.516	33.261	0.15	0.16	1.81	80	-0.92	1.41	80	-2.1	93	0.070	100	101	6.2	-0.024506	412	318	279	315	382	341	728	198	85	65	85	64	78	-0.037	11.3	0.03
213	31.666	33.419	0.15	0.16	1.80	80	-1.42	1.41	80	-2.3	93	0.070	100	100	6.2	-0.015533	410	318	279	314	383	341	723	197	85	65	85	64	79	-0.037	11.26	0.03
214	31.815	33.577	0.15	0.16	1.80	80	-0.93	1.41	80	-2.2	92	0.070	100	100	6.2	-0.041779	407	319	280	314	383	341	719	197	85	65	85	64	79	-0.036	11.26	0.03
215	31.965	33.735	0.15	0.16	1.79	80	-0.92	1.41	80	-2.2	93	0.070	100	100	6.1	-0.041809	405	319	281	314	383	340	715	196	85	65	85	64	78	-0.036	11.22	0.03
216	32.115	33.894	0.15	0.16	1.80	80	-0.92	1.41	80	-2.3	92	0.070	100	101	6.1	0.002441	402	320	281	314	384	340	712	194	85	65	85	64	77	-0.036	11.17	0.03
217	32.265	34.052	0.15	0.16	1.80	80	-0.94	1.41	80	-2.1	92	0.070	100	100	6.1	-0.030395	400	320	282	313	384	340	709	194	85	65	85	64	78	-0.036	11.19	0.03
218	32.414	34.210	0.15	0.16	1.82	80	-0.93	1.42	80	-2.3	92	0.070	100	100	6.1	-0.018585	398	321	283	313	385	340	707	193	85	65	85	64	79	-0.035	11.21	0.03
219	32.564	34.369	0.15	0.16	1.81	80	-0.95	1.41	80	-2.1	92	0.070	100	101	6.0	-0.029999	395	321	283	313	386	340	704	193	84	64	85	64	79	-0.035	11.22	0.03
220	32.714	34.527	0.15	0.16	1.81	80	-1.01	1.42	80	-2.1	92	0.070	100	100	6.0	-0.018158	394	322	284	313	386	340	703	193	84	65	85	64	80	-0.035	11.22	0.02
221	32.864	34.686	0.15	0.16	1.80	80	-1	1.41	80	-2.3	92	0.070	100	101	6.0	-0.032196	392	322	285	312	386	339	700	192	84	65	84	64	80	-0.035	11.22	0.02
222	33.013	34.843	0.15	0.16	1.80	80	-1.14	1.42	80	-2.3	92	0.070	100	100	5.9	-0.07016	390	323	285	312	387	339	698	191	84	64	84	64	79	-0.035	11.23	0.02
223	33.163	35.002	0.15	0.16	1.80	80	-1.13	1.42	80	-2.3	91	0.070	100	101	5.9	0.003509	387	324	286	312	387	339	697	191	84	64	84	64	78	-0.035	11.22	0.02
224	33.313	35.160	0.15	0.16	1.80	80	-1.02	1.41	80	-2.2	91	0.070	100	100	5.9	-0.014495	386	324	286	312	388	339	696	190	84	64	84	64	79	-0.034	11.24	0.02
225	33.463	35.319	0.15	0.16	1.80	80	-1.41	1.42	80	-2.1	92	0.070	100	101	5.9	-0.027802	384	325	287	311	388	339	694	189	84	64	84	63	80	-0.034	11.33	0.02
226	33.613	35.477	0.15	0.16	1.79	80	-0.93	1.41	80	-2.1	92	0.070	100	100	5.9	-0.023315	383	325	287	311	388	339	693	189	84	64	84	63	79	-0.034	11.3	0.02
227	33.762	35.636	0.15	0.16	1.82	80	-1.15	1.41	80	-2.4	92	0.070	100	101	5.8	-0.016785	382	326	288	311	389	339	692	188	84	64	84	63	78	-0.034	11.34	0.02
228	33.912	35.794	0.15	0.16	1.82	80	-1.01	1.42	80	-2.3	91	0.070	100	100	5.8	-0.0354	380	327	289	311	389	339	691	188	84	64	84	63	78	-0.034	11.32	0.02
229	34.062	35.953	0.15	0.16	1.81	80	-1.24	1.40	80	-2.1	91	0.070	100	101	5.8	-0.009156	379	327	289	310	390	339	690	188	84	64	84	63	79	-0.034	11.33	0.02
230	34.212	36.111	0.15	0.16	1.80	80	-1.01	1.41	80	-2.1	91	0.070	100	100	5.8	-0.042633	378	328	290	310	390	339	689	187	84	64	84	63	79	-0.034	11.35	0.02
231	34.362	36.269	0.15	0.16	1.79	80	-1.39	1.41	80	-2.2	91	0.070	100	100	5.7	-0.035248	377	329	290	310	391	339	694	187	84	64	84	63	80	-0.034	11.12	0.03
232	34.512	36.428	0.15	0.16	1.81	80	-1.4	1.41	80	-2.2	91	0.070	100	101	5.7	-0.014007	376	329	291	310	391	339	698	187	84	64	84	63	79	-0.034	11	0.03
233	34.662	36.586	0.15	0.16	1.81	80	-1.41	1.41	80	-2.1	92	0.070	100	100	5.7	-0.029175	375	329	291	310	391	339	699	187	84	64	84	63	78	-0.034	10.98	0.03
234	34.812	36.744	0.15	0.16	1.81	80	-1.04	1.42	80	-2.1	91	0.070	100	100	5.6	-0.0289	375	330	292	309	392	340	699	186	84	64	84	63	79	-0.033	10.91	0.03
235	34.961	36.903	0.15	0.16	1.81	80	-0.96	1.40	80	-2.1	91	0.070	99	101	5.6	-0.011047	374	330	292	309	392	339	699	185	84	64	84	63	79	-0.033	10.85	0.03
236	35.111	37.062	0.15	0.16	1.82	80	-0.98	1.42	80	-2.4	91	0.070	100	101	5.6	-0.015137	374	330	293	309	392	340	698	185	84	64	84	63	78	-0.033	10.91	0.03
237	35.261	37.220	0.15	0.16	1.81	80	-1.39	1.41	80	-2.3	91	0.070	100	100	5.6	-0.043579	373	330	293	309	392	339	698	185	84	64	84	63	78	-0.033	10.92	0.03
238	35.410	37.378	0.15	0.16	1.80	80	-0.93	1.41	80	-2.2	91	0.070	99	100	5.6	-0.00708	372	330	294	308	393	339	698	185	84	64	84	63	78	-0.033	10.94	0.03
239	35.560	37.536	0.15	0.16	1.79	80	-1.41	1.42	80	-2.1	92	0.070	100	100	5.5	-0.026001	371	329	294	308	393	339	698	184	84	64	84	63	78	-0.033	10.97	0.03
240	35.710	37.695	0.15	0.16	1.79	80	-1.16	1.41	80	-2.2	91	0.070	100	101	5.5	-0.028656	371	329	294	308	393	339	697	184	84	64	84	63	78	-0.033	10.98	0.03
241	35.860	37.853	0.15	0.16	1.82	80	-1.39	1.41	80	-2.3	92	0.070	100	100	5.5	-0.041199	370	329	295	308	393	339	696	183	84	64	84	63	77	-0.033	11.01	0.03
242	36.010	38.011	0.15	0.16	1.83	80	-1.4	1.42	80	-2.1	91	0.070	100	100	5.5	-0.002441	370	329	295	308	393	339	696	183	84	64	84	63	79	-0.032	11.05	0.03
243	36.160	38.170	0.15	0.16	1.82	80	-1.16	1.41	80	-2.3	91	0.070	100	101	5.4	-0.025147	369	329	296	307	393	339	695	183	84	64	84	63	79	-0.032	11.03	0.03
244	36.310	38.329	0.15	0.16	1.80	80	-1.29	1.41	80	-2.2	91	0.070	100	101	5.4	-0.063629	369	329	297	307	392	339	696	182	84	64	84	63	80	-0.032	10.99	0.03

Wood Heater Test Data
Low Burn Emissions Data

Run: 4

Manufacturer: Kuma Stoves
Model: Aspen LE
Tracking No.: 2357
Project No.: 0123WM011E
Test Date: 26-Feb-19
Beginning Clock Time: 15:13

Total Sampling Time: 605 min
Recording Interval: 1 min
Background Sample Volume: 89.485 cubic feet

Meter Box Y Factor: 1.009 (1) 0.996 (2) 0.996 (Amb)

Barometric Pressure:	Begin	Middle	End	Average
	28.33	28.37	28.41	28.37 0

OMNI Equipment Numbers:

PM Control Modules: 371, 372
Dilution Tunnel MW(dry): 29.00 lb/lb-mole
Dilution Tunnel MW(wet): 28.78 lb/lb-mole
Dilution Tunnel H2O: 2.00 percent
Dilution Tunnel Static: -0.110 "H2O
Tunnel Area: 0.19635 ft2
Pitot Tube Cp: 0.99

Avg. Tunnel Velocity: 18.35 ft/sec.
Initial Tunnel Flow: 193.2 scfm
Average Tunnel Flow: 193.0 scfm
Post-Test Leak Check (1): 0.000 cfm @ 9 in. Hg
Post-Test Leak Check (2): 0.000 cfm @ 10 in. Hg
Average Test Piece Fuel Moisture: 20.37 Dry Basis %

Technician Signature:

Velocity Traverse Data	Pt.1	Pt.2	Pt.3	Pt.4	Pt.5	Pt.6	Pt.7	Pt.8	Center	
Initial dP	0.068	0.074	0.072	0.070	0.070	0.074	0.068	0.066	0.070	"H2O
Temp:	92	92	91	91	91	91	91	91	92	°F

V_{strav} 18.44 ft/sec V_{scent} 18.43 ft/sec F_p 1.001

	Particulate Sampling Data														Fuel Weight (lb)		Temperature Data (°F)												Stack Gas Data		
Elapsed Time (min)	Gas Meter 1 (ft^3)	Gas Meter 2 (ft^3)	Sample Rate 1 (cfm)	Sample Rate 2 (cfm)	Orifice dH 1 ("H_2O)	Meter 1 Temp (°F)	Meter 1 Vacuum ("Hg)	Orifice dH 2 ("H_2O)	Meter 2 Temp (°F)	Meter 2 Vacuum ("Hg)	Dilution Tunnel (°F)	Dilution Tunnel Center dP	Pro. Rate 1	Pro. Rate 2	Scale Reading	Weight Change	Firebox Top	Firebox Bottom	Firebox Back	Firebox Left	Firebox Right	Avg. Stove Surface	Catalyst Exit	Stack	Filter 1	Dryer Exit 1	Filter 2	Dryer Exit 2	Ambient	Draft ("H_2O)	CO_2 (%)	CO (%)
245	36.459	38.487	0.15	0.16	1.81	80	-1.3	1.41	80	-2.3	91	0.070	99	100	5.4	-0.014343	368	328	297	307	392	338	695	182	84	64	84	63	79	-0.032	11.01	0.03
246	36.609	38.645	0.15	0.16	1.80	80	-1.22	1.41	80	-2.1	91	0.070	100	100	5.4	0.00177	368	328	298	307	392	339	694	182	84	64	84	63	80	-0.032	11.03	0.03
247	36.759	38.804	0.15	0.16	1.80	80	-1.38	1.42	80	-2.3	91	0.070	100	101	5.3	-0.044525	367	328	298	307	391	338	693	182	84	64	84	63	80	-0.032	11.04	0.03
248	36.909	38.962	0.15	0.16	1.79	80	-1.36	1.41	80	-2.2	91	0.070	100	100	5.3	-0.019715	366	328	299	306	391	338	692	181	84	64	84	63	79	-0.032	11.05	0.03
249	37.059	39.121	0.15	0.16	1.81	80	-1.15	1.42	80	-2.3	91	0.070	100	101	5.3	-0.008667	366	328	299	306	391	338	691	181	84	64	84	63	79	-0.032	11.06	0.03
250	37.209	39.279	0.15	0.16	1.80	80	-1.06	1.42	80	-2.3	91	0.070	100	100	5.3	-0.037994	365	328	300	306	391	338	690	181	84	64	84	63	79	-0.032	11.07	0.03
251	37.359	39.438	0.15	0.16	1.81	80	-1.31	1.41	80	-2.2	91	0.070	100	101	5.2	-0.014466	365	328	300	306	391	338	689	180	84	64	84	63	80	-0.032	11.1	0.03
252	37.509	39.596	0.15	0.16	1.82	80	-1.12	1.41	80	-2.1	91	0.070	100	100	5.2	-0.046142	365	328	301	306	390	338	689	180	84	64	84	63	80	-0.032	11.07	0.02
253	37.658	39.755	0.15	0.16	1.80	80	-1.08	1.40	80	-2.3	91	0.070	99	101	5.2	-0.001679	364	328	301	305	390	338	688	181	84	64	84	63	80	-0.032	11.03	0.02
254	37.808	39.913	0.15	0.16	1.80	80	-0.92	1.41	80	-2.1	91	0.070	100	100	5.2	-0.028503	363	328	302	305	390	338	688	181	84	64	84	63	80	-0.031	11.04	0.02
255	37.958	40.071	0.15	0.16	1.79	80	-1.01	1.42	80	-2.2	91	0.070	100	100	5.2	-0.01712	363	328	302	305	389	337	688	180	84	64	84	63	79	-0.032	11.03	0.02
256	38.108	40.230	0.15	0.16	1.80	80	-1.31	1.41	80	-2.3	91	0.070	100	101	5.1	-0.0112	362	328	302	305	389	337	688	180	84	64	84	63	80	-0.031	10.98	0.02
257	38.258	40.388	0.15	0.16	1.81	80	-1.17	1.41	80	-2.1	91	0.070	100	100	5.1	-0.03357	362	328	303	304	389	337	689	180	84	64	84	63	79	-0.031	11.1	0.02
258	38.408	40.546	0.15	0.16	1.79	80	-0.93	1.42	80	-2.1	91	0.070	100	100	5.1	-0.035705	362	328	304	304	389	337	690	180	84	64	84	63	80	-0.031	11.15	0.02
259	38.557	40.705	0.15	0.16	1.81	80	-1.25	1.40	80	-2.2	91	0.070	99	101	5.1	-0.018921	362	328	304	304	388	337	692	180	84	64	85	63	80	-0.031	10.98	0.03
260	38.707	40.863	0.15	0.16	1.81	80	-1.06	1.42	80	-2.1	91	0.070	100	100	5.0	-0.026672	361	328	304	304	388	337	692	180	84	64	85	63	80	-0.031	10.97	0.03
261	38.857	41.022	0.15	0.16	1.81	80	-1.17	1.41	80	-2.3	91	0.070	100	101	5.0	-0.008942	361	328	305	304	388	337	693	180	83	64	84	63	81	-0.031	10.98	0.03
262	39.007	41.180	0.15	0.16	1.81	80	-1.41	1.41	80	-2.1	92	0.070	100	100	5.0	-0.025482	361	328	305	304	388	337	694	180	83	64	85	63	80	-0.031	11.02	0.03
263	39.157	41.338	0.15	0.16	1.79	80	-1.28	1.41	80	-2.2	91	0.070	100	100	5.0	-0.018067	361	328	306	303	387	337	696	180	83	64	84	63	80	-0.031	11.03	0.03
264	39.307	41.497	0.15	0.16	1.79	80	-1.15	1.41	80	-2.1	92	0.070	100	101	4.9	-0.026062	361	328	306	303	387	337	698	179	83	64	84	63	80	-0.031	10.87	0.03
265	39.457	41.655	0.15	0.16	1.81	80	-1.25	1.41	80	-2.1	92	0.070	100	100	4.9	-0.028656	362	328	306	303	387	337	704	180	83	64	84	63	80	-0.031	10.87	0.03
266	39.607	41.813	0.15	0.16	1.81	80	-1.04	1.42	80	-2.3	92	0.070	100	100	4.9	-0.022888	362	328	307	303	387	337	709	180	83	64	84	63	79	-0.031	10.89	0.04
267	39.756	41.972	0.15	0.16	1.82	80	-0.92	1.41	80	-2.1	92	0.070	100	101	4.9	-0.011597	363	328	307	303	387	338	714	181	83	64	84	63	80	-0.032	10.94	0.04
268	39.906	42.130	0.15	0.16	1.81	80	-1.04	1.41	80	-2.2	91	0.070	100	100	4.8	-0.050354	364	328	307	302	386	337	717	181	83	64	85	63	80	-0.032	10.98	0.03
269	40.056	42.289	0.15	0.16	1.81	80	-1.14	1.42	80	-2.1	92	0.070	100	101	4.8	0.001007	365	328	308	302	386	338	720	181	83	64	85	63	79	-0.032	10.99	0.04
270	40.206	42.446	0.15	0.16	1.80	80	-1.12	1.41	80	-2.3	92	0.070	100	100	4.8	-0.040161	366	328	308	302	385	338	721	181	83	64	85	62	80	-0.031	11.03	0.04
271	40.356	42.605	0.15	0.16	1.79	80	-1.24	1.41	80	-2.3	92	0.070	100	101	4.8	-0.023925	366	328	308	302	385	338	722	181	83	64	85	62	79	-0.031	10.96	0.03
272	40.506	42.763	0.15	0.16	1.79	80	-1.41	1.41	80	-2.3	92	0.070	100	100	4.7	-0.023987	367	328	308	302	385	338	721	181	83	64	85	62	80	-0.031	10.98	0.04
273	40.656	42.922	0.15	0.16	1.81	80	-0.92	1.41	80	-2.1	92	0.070	100	101	4.7	-0.042938	367	328	308	302	385	338	720	181	83	64	85	62	80	-0.031	10.9	0.04
274	40.806	43.079	0.15	0.16	1.81	80	-1.1	1.42	80	-2.3	92	0.070	100	100	4.7	-0.01413	368	327	309	301	385	338	718	181	83	64	85	62	80	-0.031	10.91	0.03
275	40.955	43.238	0.15	0.16	1.82	80	-1.12	1.40	80	-2.2	92	0.070	100	101	4.7	-0.030701	368	327	309	301	384	338	715	181	84	64	85	62	79	-0.031	10.87	0.03
276	41.105	43.396	0.15	0.16	1.80	80	-1.14	1.41	80	-2.3	92	0.070	100	100	4.7	-0.002716	368	327	309	301	384	338	711	180	84	64	85	62	79	-0.031	10.78	0.03
277	41.254	43.555	0.15	0.16	1.81	80	-1.17	1.41	80	-2.1	92	0.070	100	101	4.6	-0.035675	367	327	309	301	384	338	707	181	84	64	85	62	80	-0.031	10.73	0.03
278	41.404	43.713	0.15	0.16	1.80	80	-1.07	1.41	80	-2.3	92	0.070	100	100	4.6	-0.002624	367	327	310	301	383	338	703	180	84	64	85	62	79	-0.031	10.71	0.03
279	41.554	43.871	0.15	0.16	1.80	80	-1.36	1.41	80	-2.1	92	0.070	100	100	4.6	-0.017487	366	327	310	300	383	337	699	180	84	64	85	62	80	-0.031	10.61	0.03

Wood Heater Test Data
Low Burn Emissions Data

Run: 4

Manufacturer: Kuma Stoves
Model: Aspen LE
Tracking No.: 2357
Project No.: 0123WM011E
Test Date: 26-Feb-19
Beginning Clock Time: 15:13

Total Sampling Time: 605 min
Recording Interval: 1 min
Background Sample Volume: 89.485 cubic feet

Meter Box Y Factor: 1.009 (1) 0.996 (2) 0.996 (Amb)

Barometric Pressure:	Begin	Middle	End	Average
	28.33	28.37	28.41	28.37 0

OMNI Equipment Numbers:

PM Control Modules: 371, 372
Dilution Tunnel MW(dry): 29.00 lb/lb-mole
Dilution Tunnel MW(wet): 28.78 lb/lb-mole
Dilution Tunnel H2O: 2.00 percent
Dilution Tunnel Static: -0.110 "H2O
Tunnel Area: 0.19635 ft2
Pitot Tube Cp: 0.99

Avg. Tunnel Velocity: 18.35 ft/sec.
Initial Tunnel Flow: 193.2 scfm
Average Tunnel Flow: 193.0 scfm
Post-Test Leak Check (1): 0.000 cfm @ 9 in. Hg
Post-Test Leak Check (2): 0.000 cfm @ 10 in. Hg
Average Test Piece Fuel Moisture: 20.37 Dry Basis %

Technician Signature:

Velocity Traverse Data	Pt.1	Pt.2	Pt.3	Pt.4	Pt.5	Pt.6	Pt.7	Pt.8	Center	
Initial dP	0.068	0.074	0.072	0.070	0.070	0.074	0.068	0.066	0.070	"H2O
Temp:	92	92	91	91	91	91	91	91	92	°F

V_{strav} 18.44 ft/sec V_{scent} 18.43 ft/sec F_p 1.001

	Particulate Sampling Data														Fuel Weight (lb)		Temperature Data (°F)												Stack Gas Data		
Elapsed Time (min)	Gas Meter 1 (ft^3)	Gas Meter 2 (ft^3)	Sample Rate 1 (cfm)	Sample Rate 2 (cfm)	Orifice dH 1 ("H_2O)	Meter 1 Temp (°F)	Meter 1 Vacuum ("Hg)	Orifice dH 2 ("H_2O)	Meter 2 Temp (°F)	Meter 2 Vacuum ("Hg)	Dilution Tunnel (°F)	Dilution Tunnel Center dP	Pro. Rate 1	Pro. Rate 2	Scale Reading	Weight Change	Firebox Top	Firebox Bottom	Firebox Back	Firebox Left	Firebox Right	Avg. Stove Surface	Catalyst Exit	Stack	Filter 1	Dryer Exit 1	Filter 2	Dryer Exit 2	Ambient	Draft ("H_2O)	CO_2 (%)	CO (%)
280	41.704	44.029	0.15	0.16	1.79	80	-1.37	1.41	80	-2.3	92	0.070	100	100	4.6	-0.033752	365	326	310	300	382	337	695	180	84	64	85	62	80	-0.031	10.61	0.03
281	41.854	44.188	0.15	0.16	1.81	80	-1.24	1.41	80	-2.2	92	0.070	100	101	4.6	-0.012391	365	326	310	300	382	337	692	179	84	64	85	62	80	-0.030	10.56	0.02
282	42.004	44.346	0.15	0.16	1.81	80	-0.98	1.41	80	-2.1	92	0.070	100	100	4.5	-0.045166	364	326	310	300	382	336	688	178	84	64	85	62	79	-0.030	10.54	0.02
283	42.153	44.504	0.15	0.16	1.82	80	-0.92	1.41	80	-2.3	92	0.070	100	100	4.5	0.002106	362	326	310	300	382	336	685	178	84	63	85	62	80	-0.030	10.51	0.02
284	42.303	44.663	0.15	0.16	1.80	80	-0.97	1.42	80	-2.3	92	0.070	100	101	4.5	-0.058411	361	326	310	299	381	335	681	177	84	64	85	62	80	-0.030	10.45	0.02
285	42.452	44.821	0.15	0.16	1.81	80	-0.93	1.41	80	-2.2	92	0.070	100	100	4.5	0.002198	360	326	311	299	381	335	677	177	84	64	85	62	80	-0.030	10.4	0.02
286	42.602	44.979	0.15	0.16	1.81	80	-1.39	1.41	80	-2.1	92	0.070	100	100	4.4	-0.02298	359	325	311	299	381	335	674	177	84	64	85	62	80	-0.030	10.48	0.02
287	42.752	45.137	0.15	0.16	1.80	80	-1.41	1.41	80	-2.3	92	0.070	100	100	4.4	-0.00058	357	325	311	299	381	335	670	176	84	64	85	62	79	-0.029	10.46	0.02
288	42.902	45.296	0.15	0.16	1.79	80	-1.28	1.41	80	-2.1	92	0.070	100	101	4.4	-0.022552	356	325	311	299	380	334	668	175	84	63	85	62	80	-0.029	10.46	0.02
289	43.052	45.454	0.15	0.16	1.80	80	-1.14	1.42	80	-2.3	92	0.070	100	100	4.4	-0.025269	355	325	311	299	380	334	666	175	84	63	85	62	79	-0.030	10.44	0.02
290	43.202	45.612	0.15	0.16	1.81	80	-0.94	1.41	80	-2.3	92	0.070	100	100	4.3	-0.05069	353	325	311	298	380	333	664	174	84	63	85	62	80	-0.029	10.47	0.02
291	43.352	45.771	0.15	0.16	1.82	80	-0.97	1.41	80	-2.1	92	0.070	100	101	4.3	-0.001464	352	325	311	298	379	333	663	174	84	63	85	62	80	-0.029	10.56	0.02
292	43.501	45.929	0.15	0.16	1.81	80	-0.95	1.41	80	-2.1	92	0.070	100	100	4.3	-0.017853	351	324	311	298	379	333	663	174	84	63	85	62	80	-0.029	10.63	0.02
293	43.651	46.088	0.15	0.16	1.81	80	-1.32	1.40	80	-2.2	91	0.070	100	101	4.3	-0.028168	350	324	311	298	379	332	663	174	84	63	85	62	81	-0.029	10.66	0.03
294	43.801	46.246	0.15	0.16	1.80	80	-0.94	1.41	80	-2.3	92	0.070	100	100	4.3	-0.01416	350	324	312	298	379	333	664	174	84	63	85	62	80	-0.029	10.72	0.03
295	43.950	46.403	0.15	0.16	1.80	80	-0.92	1.42	80	-2.3	92	0.070	100	100	4.3	0.000854	349	324	312	298	379	332	665	173	84	63	85	62	80	-0.029	10.81	0.03
296	44.100	46.562	0.15	0.16	1.79	80	-1.34	1.40	80	-2.2	92	0.070	100	101	4.2	-0.0531	348	324	312	297	378	332	666	173	84	63	85	62	79	-0.029	10.84	0.03
297	44.250	46.721	0.15	0.16	1.80	80	-1.39	1.41	80	-2.3	92	0.070	100	101	4.2	-0.033722	348	324	312	297	378	332	667	173	84	63	85	62	79	-0.029	10.94	0.03
298	44.400	46.879	0.15	0.16	1.81	80	-1.17	1.41	80	-2.1	92	0.070	100	100	4.2	-0.013428	348	323	312	297	378	332	668	172	84	63	85	62	81	-0.029	10.94	0.03
299	44.550	47.037	0.15	0.16	1.79	80	-1.08	1.41	80	-2.3	92	0.070	100	100	4.2	-0.015045	348	323	312	297	378	332	668	173	84	63	85	62	78	-0.029	10.98	0.03
300	44.699	47.195	0.15	0.16	1.82	80	-1.39	1.41	80	-2.2	92	0.070	100	100	4.1	-0.033234	347	323	312	297	378	331	669	173	84	63	85	62	79	-0.029	11.05	0.03
301	44.849	47.354	0.15	0.16	1.81	80	-1.4	1.40	80	-2.2	92	0.070	100	101	4.1	0.004578	348	323	313	297	378	332	669	173	84	63	85	62	80	-0.029	11.06	0.03
302	44.999	47.512	0.15	0.16	1.81	80	-1.02	1.41	80	-2.1	92	0.070	100	100	4.1	-0.048096	347	323	313	296	378	331	668	173	84	63	85	62	80	-0.029	11.01	0.03
303	45.149	47.670	0.15	0.16	1.80	80	-0.99	1.42	80	-2.1	92	0.070	100	100	4.1	0.005585	347	323	313	296	377	331	667	173	84	63	85	62	80	-0.029	10.96	0.02
304	45.298	47.828	0.15	0.16	1.79	80	-1.01	1.41	80	-2.3	91	0.070	99	100	4.1	-0.033325	347	323	313	296	377	331	666	173	84	63	85	62	79	-0.029	10.89	0.02
305	45.448	47.987	0.15	0.16	1.80	80	-1.38	1.41	80	-2.1	92	0.070	100	101	4.0	-0.018067	346	323	313	296	377	331	665	172	84	63	85	62	79	-0.029	10.95	0.02
306	45.598	48.145	0.15	0.16	1.81	80	-1.38	1.41	80	-2.3	91	0.070	100	100	4.0	-0.028228	346	323	313	296	377	331	663	172	84	63	85	62	79	-0.029	10.97	0.03
307	45.748	48.303	0.15	0.16	1.79	80	-1	1.41	80	-2.3	91	0.070	100	100	4.0	-0.006684	346	323	313	295	377	331	662	172	84	63	85	62	79	-0.029	10.89	0.02
308	45.897	48.461	0.15	0.16	1.82	80	-1.4	1.41	80	-2.3	91	0.070	99	100	4.0	-0.028503	346	323	314	295	376	331	661	171	84	63	85	62	80	-0.029	10.85	0.02
309	46.047	48.620	0.15	0.16	1.82	80	-0.94	1.41	80	-2.1	91	0.070	100	101	4.0	-0.015595	345	324	314	295	376	331	661	171	84	63	85	62	79	-0.029	10.86	0.02
310	46.197	48.778	0.15	0.16	1.81	80	-1.03	1.40	80	-2.3	91	0.070	100	100	4.0	0.000367	345	324	314	295	376	331	659	172	84	63	85	62	79	-0.029	10.81	0.02
311	46.347	48.936	0.15	0.16	1.80	80	-0.98	1.42	80	-2.1	91	0.070	100	100	3.9	-0.036316	344	324	314	295	376	331	658	172	84	63	85	62	79	-0.029	10.81	0.02
312	46.497	49.095	0.15	0.16	1.80	80	-1.28	1.40	80	-2.3	91	0.070	100	101	3.9	-0.014496	344	324	314	295	376	331	656	171	84	63	85	62	79	-0.029	10.79	0.03
313	46.647	49.253	0.15	0.16	1.79	80	-1.33	1.41	80	-2.1	91	0.070	100	100	3.9	-0.029053	344	324	314	295	376	331	656	171	84	63	85	62	79	-0.028	10.76	0.03
314	46.797	49.412	0.15	0.16	1.81	80	-1.37	1.41	80	-2.3	91	0.070	100	101	3.9	-0.015869	343	324	314	295	376	330	656	170	84	63	85	62	79	-0.029	10.73	0.03

Wood Heater Test Data
Low Burn Emissions Data

Run: 4

Manufacturer: Kuma Stoves
Model: Aspen LE
Tracking No.: 2357
Project No.: 0123WM011E
Test Date: 26-Feb-19
Beginning Clock Time: 15:13

Total Sampling Time: 605 min
Recording Interval: 1 min
Background Sample Volume: 89.485 cubic feet

Meter Box Y Factor: 1.009 (1) 0.996 (2) 0.996 (Amb)

Barometric Pressure:	Begin	Middle	End	Average
	28.33	28.37	28.41	28.37

OMNI Equipment Numbers:

PM Control Modules: 371, 372
Dilution Tunnel MW(dry): 29.00 lb/lb-mole
Dilution Tunnel MW(wet): 28.78 lb/lb-mole
Dilution Tunnel H2O: 2.00 percent
Dilution Tunnel Static: -0.110 "H2O
Tunnel Area: 0.19635 ft2
Pitot Tube Cp: 0.99

Avg. Tunnel Velocity: 18.35 ft/sec.
Initial Tunnel Flow: 193.2 scfm
Average Tunnel Flow: 193.0 scfm
Post-Test Leak Check (1): 0.000 cfm @ 9 in. Hg
Post-Test Leak Check (2): 0.000 cfm @ 10 in. Hg
Average Test Piece Fuel Moisture: 20.37 Dry Basis %

Technician Signature:

Velocity Traverse Data	Pt.1	Pt.2	Pt.3	Pt.4	Pt.5	Pt.6	Pt.7	Pt.8	Center	
Initial dP	0.068	0.074	0.072	0.070	0.070	0.074	0.068	0.066	0.070	"H2O
Temp:	92	92	91	91	91	91	91	91	92	°F

V_{strav} 18.44 ft/sec V_{scent} 18.43 ft/sec F_p 1.001

	Particulate Sampling Data														Fuel Weight (lb)		Temperature Data (°F)													Stack Gas Data		
Elapsed Time (min)	Gas Meter 1 (ft^3)	Gas Meter 2 (ft^3)	Sample Rate 1 (cfm)	Sample Rate 2 (cfm)	Orifice dH 1 ("H_2O)	Meter 1 Temp (°F)	Meter 1 Vacuum ("Hg)	Orifice dH 2 ("H_2O)	Meter 2 Temp (°F)	Meter 2 Vacuum ("Hg)	Dilution Tunnel (°F)	Dilution Tunnel Center dP	Pro. Rate 1	Pro. Rate 2	Scale Reading	Weight Change	Firebox Top	Firebox Bottom	Firebox Back	Firebox Left	Firebox Right	Avg. Stove Surface	Catalyst Exit	Stack	Filter 1	Dryer Exit 1	Filter 2	Dryer Exit 2	Ambient	Draft ("H_2O)	CO_2 (%)	CO (%)
315	46.947	49.569	0.15	0.16	1.79	80	-1.39	1.41	80	-2.3	91	0.070	100	99	3.8	-0.03653	343	324	314	295	375	330	655	170	84	63	85	62	79	-0.028	10.72	0.03
316	47.096	49.728	0.15	0.16	1.82	80	-0.95	1.41	80	-2.2	91	0.070	99	101	3.8	-0.011718	342	325	314	294	375	330	655	170	84	63	85	62	79	-0.028	10.7	0.03
317	47.245	49.886	0.15	0.16	1.82	80	-0.93	1.41	80	-2.3	91	0.070	99	100	3.8	-6.1E-05	342	325	314	294	375	330	654	170	84	63	85	62	80	-0.028	10.63	0.03
318	47.395	50.045	0.15	0.16	1.82	80	-0.94	1.41	80	-2.1	91	0.070	100	101	3.8	-0.022309	342	325	315	294	375	330	653	170	84	63	85	62	79	-0.028	10.64	0.03
319	47.545	50.203	0.15	0.16	1.80	80	-0.92	1.42	80	-2.1	91	0.070	100	100	3.8	-0.014007	342	325	315	294	375	330	653	170	84	63	85	62	78	-0.028	10.63	0.03
320	47.695	50.361	0.15	0.16	1.80	80	-1.29	1.41	80	-2.3	91	0.070	100	100	3.7	-0.055512	341	325	315	294	375	330	655	169	84	63	85	62	80	-0.028	10.58	0.03
321	47.845	50.519	0.15	0.16	1.79	80	-1.39	1.41	80	-2.3	91	0.070	100	100	3.7	0.006958	341	325	315	294	374	330	656	170	84	63	85	62	79	-0.028	10.58	0.03
322	47.995	50.678	0.15	0.16	1.81	80	-1.23	1.41	80	-2.1	91	0.070	100	101	3.7	-0.000549	341	325	315	294	374	330	655	169	84	63	85	62	78	-0.028	10.59	0.03
323	48.145	50.836	0.15	0.16	1.82	80	-0.94	1.41	80	-2.3	91	0.070	100	100	3.7	-0.026703	341	325	315	294	374	330	655	169	84	63	85	62	78	-0.028	10.53	0.03
324	48.294	50.994	0.15	0.16	1.82	80	-1.16	1.41	80	-2.2	91	0.070	99	100	3.7	-0.022003	341	325	315	294	374	330	654	168	84	63	85	62	78	-0.028	10.51	0.03
325	48.444	51.152	0.15	0.16	1.81	80	-0.95	1.41	80	-2.3	91	0.070	100	100	3.6	-0.028504	340	325	315	294	374	330	652	169	84	63	85	62	79	-0.028	10.51	0.03
326	48.594	51.311	0.15	0.16	1.81	80	-1.31	1.41	80	-2.1	91	0.070	100	101	3.6	-0.017578	340	326	315	294	374	330	652	169	84	63	85	62	79	-0.028	10.53	0.03
327	48.744	51.469	0.15	0.16	1.81	80	-0.93	1.40	80	-2.1	91	0.070	100	100	3.6	-0.003173	340	325	315	294	373	329	650	168	84	63	85	62	79	-0.027	10.51	0.03
328	48.893	51.627	0.15	0.16	1.80	80	-1.09	1.41	80	-2.1	91	0.070	99	100	3.6	-0.035218	340	325	315	293	374	329	650	167	84	63	85	62	79	-0.027	10.47	0.03
329	49.043	51.785	0.15	0.16	1.79	80	-1.37	1.41	80	-2.3	91	0.070	100	100	3.6	-0.014404	339	325	315	293	373	329	649	168	84	63	85	62	78	-0.027	10.4	0.03
330	49.193	51.944	0.15	0.16	1.79	80	-1.01	1.41	80	-2.3	90	0.070	100	101	3.5	-0.041107	339	325	315	293	373	329	648	167	84	63	85	62	79	-0.027	10.42	0.03
331	49.343	52.102	0.15	0.16	1.81	80	-0.94	1.41	80	-2.2	91	0.070	100	100	3.6	0.016784	339	325	315	293	373	329	647	167	84	63	85	62	79	-0.027	10.32	0.03
332	49.493	52.260	0.15	0.16	1.82	80	-1.14	1.41	80	-2.2	91	0.070	100	100	3.5	-0.009521	338	325	315	293	373	329	646	167	84	63	85	62	78	-0.027	10.38	0.03
333	49.642	52.419	0.15	0.16	1.82	80	-1.4	1.40	80	-2.2	91	0.070	99	101	3.5	-0.030609	338	325	316	293	372	329	645	167	84	63	85	62	78	-0.027	10.37	0.03
334	49.792	52.577	0.15	0.16	1.81	80	-1.05	1.41	80	-2.1	91	0.070	100	100	3.5	0.004242	337	325	315	293	372	328	645	166	84	63	85	62	78	-0.027	10.3	0.03
335	49.942	52.736	0.15	0.16	1.81	80	-1.26	1.40	80	-2.2	90	0.070	100	101	3.5	-0.021424	337	325	316	293	372	329	645	166	84	63	85	62	78	-0.027	10.32	0.03
336	50.092	52.894	0.15	0.16	1.80	80	-1.41	1.41	80	-2.1	91	0.070	100	100	3.5	-0.027649	337	325	315	293	371	328	652	167	84	63	85	62	79	-0.027	10.46	0.04
337	50.242	53.052	0.15	0.16	1.80	80	-0.93	1.41	80	-2.2	90	0.070	100	100	3.5	-0.009399	337	325	316	293	371	328	656	166	84	63	84	62	79	-0.027	10.77	0.04
338	50.392	53.211	0.15	0.16	1.80	80	-0.97	1.41	80	-2.3	90	0.070	100	101	3.4	-0.029755	337	325	316	293	370	328	659	166	84	63	84	62	78	-0.027	10.72	0.04
339	50.542	53.369	0.15	0.16	1.81	80	-0.96	1.42	80	-2.1	90	0.070	100	100	3.4	0.00589	337	324	316	293	370	328	659	166	83	63	84	62	79	-0.027	10.62	0.04
340	50.692	53.527	0.15	0.16	1.80	80	-1.17	1.42	80	-2.2	90	0.070	100	100	3.4	-0.022766	337	324	316	293	370	328	658	166	83	63	84	62	79	-0.027	10.57	0.04
341	50.841	53.685	0.15	0.16	1.82	80	-0.93	1.40	80	-2.1	90	0.070	99	100	3.4	0.003052	337	324	316	293	370	328	658	166	83	63	84	62	80	-0.027	10.54	0.04
342	50.991	53.844	0.15	0.16	1.82	80	-1.4	1.41	80	-2.1	90	0.070	100	101	3.4	-0.03894	337	323	316	293	370	328	657	166	83	63	84	62	79	-0.027	10.52	0.03
343	51.141	54.002	0.15	0.16	1.80	80	-1.2	1.41	80	-2.2	90	0.070	100	100	3.4	-0.010102	337	323	316	294	369	328	657	165	83	63	84	62	78	-0.027	10.54	0.03
344	51.291	54.160	0.15	0.16	1.80	80	-1.03	1.41	80	-2.1	90	0.070	100	100	3.3	-0.040252	337	323	316	294	369	328	657	166	83	63	84	62	77	-0.027	10.52	0.03
345	51.441	54.319	0.15	0.16	1.79	80	-0.92	1.42	80	-2.3	90	0.070	100	101	3.3	-0.019562	337	322	316	294	368	327	657	166	83	63	84	62	78	-0.027	10.45	0.03
346	51.591	54.477	0.15	0.16	1.81	80	-0.92	1.41	80	-2.1	90	0.070	100	100	3.3	-0.000183	337	322	316	294	368	327	656	166	83	63	84	62	78	-0.027	10.41	0.03
347	51.741	54.636	0.15	0.16	1.81	80	-1.33	1.41	80	-2.3	90	0.070	100	101	3.3	-0.035004	337	322	316	294	367	327	656	166	83	63	84	62	78	-0.027	10.42	0.03
348	51.891	54.793	0.15	0.16	1.79	80	-1.38	1.42	80	-2.2	89	0.070	100	99	3.3	6.1E-05	336	322	315	294	367	327	658	166	83	63	84	62	77	-0.028	10.37	0.03
349	52.040	54.952	0.15	0.16	1.82	80	-0.99	1.40	80	-2.3	89	0.070	99	100	3.3	-0.01889	337	321	316	294	366	327	658	166	83	63	84	62	77	-0.027	10.38	0.03

Wood Heater Test Data
Low Burn Emissions Data

Run: 4

Manufacturer: Kuma Stoves
Model: Aspen LE
Tracking No.: 2357
Project No.: 0123WM011E
Test Date: 26-Feb-19
Beginning Clock Time: 15:13

Total Sampling Time: 605 min
Recording Interval: 1 min
Background Sample Volume: 89.485 cubic feet

Meter Box Y Factor: 1.009 (1) 0.996 (2) 0.996 (Amb)

Barometric Pressure:	Begin	Middle	End	Average	
	28.33	28.37	28.41	28.37	0

OMNI Equipment Numbers:

PM Control Modules: 371, 372
Dilution Tunnel MW(dry): 29.00 lb/lb-mole
Dilution Tunnel MW(wet): 28.78 lb/lb-mole
Dilution Tunnel H2O: 2.00 percent
Dilution Tunnel Static: -0.110 "H2O
Tunnel Area: 0.19635 ft2
Pitot Tube Cp: 0.99

Avg. Tunnel Velocity: 18.35 ft/sec.
Initial Tunnel Flow: 193.2 scfm
Average Tunnel Flow: 193.0 scfm
Post-Test Leak Check (1): 0.000 cfm @ 9 in. Hg
Post-Test Leak Check (2): 0.000 cfm @ 10 in. Hg
Average Test Piece Fuel Moisture: 20.37 Dry Basis %

Technician Signature:

Velocity Traverse Data	Pt.1	Pt.2	Pt.3	Pt.4	Pt.5	Pt.6	Pt.7	Pt.8	Center	
Initial dP	0.068	0.074	0.072	0.070	0.070	0.074	0.068	0.066	0.070	"H2O
Temp:	92	92	91	91	91	91	91	91	92	°F

V_{strav} 18.44 ft/sec V_{scent} 18.43 ft/sec F_p 1.001

	Particulate Sampling Data														Fuel Weight (lb)		Temperature Data (°F)												Stack Gas Data		
Elapsed Time (min)	Gas Meter 1 (ft^3)	Gas Meter 2 (ft^3)	Sample Rate 1 (cfm)	Sample Rate 2 (cfm)	Orifice dH 1 ("H_2O)	Meter 1 Temp (°F)	Meter 1 Vacuum ("Hg)	Orifice dH 2 ("H_2O)	Meter 2 Temp (°F)	Meter 2 Vacuum ("Hg)	Dilution Tunnel (°F)	Dilution Tunnel Center dP	Pro. Rate 1	Pro. Rate 2	Scale Reading	Weight Change	Firebox Top	Firebox Bottom	Firebox Back	Firebox Left	Firebox Right	Avg. Stove Surface	Catalyst Exit	Stack	Filter 1	Dryer Exit 1	Filter 2	Dryer Exit 2	Ambient	Draft ("H_2O)	CO_2 (%)	CO (%)
350	52.190	55.110	0.15	0.16	1.81	80	-1.24	1.42	80	-2.1	90	0.070	100	100	3.3	-0.000336	336	321	315	294	366	326	657	167	83	63	84	62	78	-0.028	10.23	0.03
351	52.340	55.269	0.15	0.16	1.82	80	-1.04	1.41	80	-2.1	89	0.070	100	100	3.2	-0.024506	336	320	315	294	365	326	656	166	83	63	84	62	76	-0.028	10.22	0.03
352	52.490	55.427	0.15	0.16	1.81	80	-0.96	1.41	80	-2.3	89	0.070	100	100	3.2	-0.029419	336	320	315	294	365	326	655	166	83	63	84	62	76	-0.027	10.21	0.03
353	52.640	55.585	0.15	0.16	1.80	80	-1.41	1.41	80	-2.3	89	0.070	100	100	3.2	-0.011993	336	320	315	294	364	326	653	166	83	63	84	62	78	-0.027	10.09	0.03
354	52.790	55.744	0.15	0.16	1.80	80	-1.39	1.41	80	-2.2	89	0.070	100	100	3.2	-0.006256	336	319	315	295	364	326	653	166	83	63	84	62	77	-0.028	10.06	0.03
355	52.940	55.902	0.15	0.16	1.82	80	-1.4	1.41	80	-2.2	90	0.070	100	100	3.1	-0.035858	335	319	315	295	363	325	653	166	83	63	84	62	76	-0.027	10.05	0.03
356	53.090	56.060	0.15	0.16	1.82	80	-0.96	1.42	80	-2.2	89	0.070	100	100	3.1	-0.011963	335	319	315	295	363	325	653	166	83	63	84	62	76	-0.028	10.05	0.03
357	53.239	56.219	0.15	0.16	1.82	80	-1.31	1.41	80	-2.1	89	0.070	99	100	3.1	0.001098	335	318	315	295	362	325	653	166	83	63	84	62	76	-0.028	10.03	0.03
358	53.389	56.377	0.15	0.16	1.81	80	-1.41	1.41	80	-2.1	89	0.070	100	100	3.1	-0.025451	335	318	315	295	362	325	653	166	83	63	84	62	77	-0.027	9.95	0.03
359	53.539	56.536	0.15	0.16	1.81	80	-1.41	1.41	80	-2.3	89	0.070	100	100	3.1	-0.028473	335	318	315	295	361	325	653	166	83	63	84	62	76	-0.028	9.99	0.03
360	53.689	56.694	0.15	0.16	1.80	80	-1.41	1.42	80	-2.2	89	0.070	100	100	3.1	0.002289	334	317	315	295	360	324	652	166	83	63	84	62	77	-0.028	9.98	0.03
361	53.839	56.852	0.15	0.16	1.80	80	-1.31	1.42	80	-2.2	89	0.070	100	100	3.1	-0.029938	334	317	315	296	360	324	654	165	83	63	83	62	76	-0.027	9.98	0.03
362	53.989	57.011	0.15	0.16	1.80	80	-1.04	1.41	80	-2.1	89	0.070	100	100	3.0	-0.014069	334	316	315	296	359	324	656	166	83	63	83	62	78	-0.028	10.02	0.03
363	54.139	57.170	0.15	0.16	1.81	80	-1.26	1.41	80	-2.1	89	0.070	100	100	3.0	-0.060211	334	316	315	296	358	324	656	165	83	63	83	62	77	-0.028	9.99	0.03
364	54.289	57.327	0.15	0.16	1.82	80	-0.95	1.42	80	-2.3	89	0.070	100	99	3.0	-0.00589	334	316	315	296	358	324	657	165	83	63	83	62	78	-0.028	10.04	0.03
365	54.438	57.486	0.15	0.16	1.82	80	-0.95	1.41	80	-2.1	88	0.070	99	100	3.0	0.015992	334	315	315	296	358	324	657	166	83	63	83	62	77	-0.028	10.02	0.03
366	54.588	57.645	0.15	0.16	1.82	80	-1.25	1.42	80	-2.2	88	0.070	100	100	3.0	-0.001587	334	315	315	296	356	323	656	166	83	63	83	62	77	-0.028	9.95	0.03
367	54.738	57.803	0.15	0.16	1.80	80	-0.93	1.40	80	-2.1	88	0.070	100	100	3.0	-0.027466	334	315	314	296	356	323	655	165	83	63	83	62	76	-0.028	9.95	0.03
368	54.888	57.961	0.15	0.16	1.80	80	-1.35	1.41	80	-2.2	89	0.070	100	100	2.9	-0.015442	333	315	314	297	356	323	655	165	82	63	83	62	75	-0.028	9.89	0.03
369	55.039	58.120	0.15	0.16	1.80	80	-1.3	1.41	80	-2.3	89	0.070	101	100	2.9	-0.034027	333	315	314	297	355	323	656	165	82	63	83	62	77	-0.028	9.98	0.03
370	55.189	58.278	0.15	0.16	1.81	80	-0.93	1.41	80	-2.3	88	0.070	100	100	2.9	-0.007019	333	315	314	297	354	323	657	165	82	63	83	62	77	-0.028	9.97	0.03
371	55.339	58.437	0.15	0.16	1.79	80	-1.11	1.42	80	-2.3	88	0.070	100	100	2.9	0.00122	333	315	314	297	354	323	657	165	83	63	83	62	76	-0.028	10.04	0.03
372	55.488	58.595	0.15	0.16	1.82	80	-0.94	1.42	80	-2.1	88	0.070	99	100	2.9	-0.032775	333	315	314	297	353	322	656	165	84	63	83	62	76	-0.028	9.99	0.03
373	55.638	58.753	0.15	0.16	1.81	80	-1.01	1.40	80	-2.2	88	0.070	100	100	2.9	-0.015412	333	315	314	297	352	322	655	165	84	63	84	62	76	-0.028	9.99	0.03
374	55.788	58.912	0.15	0.16	1.82	80	-0.98	1.41	80	-2.2	88	0.070	100	100	2.9	0.000824	333	315	313	297	352	322	655	165	85	63	84	62	77	-0.028	9.95	0.03
375	55.938	59.070	0.15	0.16	1.81	80	-1.41	1.41	80	-2.3	88	0.070	100	100	2.8	-0.029053	333	314	313	297	351	322	654	165	85	63	84	62	75	-0.028	9.99	0.03
376	56.088	59.228	0.15	0.16	1.81	80	-1.16	1.41	80	-2.1	88	0.070	100	100	2.8	-0.006469	333	314	313	297	351	322	653	165	85	63	84	62	77	-0.028	9.97	0.03
377	56.238	59.386	0.15	0.16	1.79	80	-1.4	1.42	80	-2.1	88	0.070	100	100	2.8	-0.028107	333	315	313	297	350	322	653	165	85	63	84	62	76	-0.028	9.97	0.03
378	56.388	59.545	0.15	0.16	1.82	80	-0.94	1.41	80	-2.1	87	0.070	100	100	2.8	-0.007721	333	314	313	297	349	321	653	164	85	63	84	62	76	-0.028	9.9	0.03
379	56.539	59.704	0.15	0.16	1.82	80	-1.24	1.41	80	-2.3	88	0.070	101	100	2.8	-0.01239	332	314	313	297	349	321	652	164	86	63	84	62	76	-0.028	9.88	0.03
380	56.688	59.861	0.15	0.16	1.82	80	-1.06	1.42	80	-2.1	88	0.070	99	99	2.8	0.001526	332	314	313	297	348	321	652	164	86	63	84	62	77	-0.028	9.87	0.03
381	56.838	60.020	0.15	0.16	1.82	80	-1.04	1.41	80	-2.3	87	0.070	100	100	2.7	-0.030365	332	314	313	297	348	321	650	164	85	63	84	62	76	-0.027	9.88	0.03
382	56.988	60.179	0.15	0.16	1.82	80	-1.03	1.42	80	-2.2	87	0.070	100	100	2.7	-0.033081	331	314	313	297	347	320	649	163	85	63	84	62	77	-0.027	9.83	0.02
383	57.138	60.337	0.15	0.16	1.81	80	-1.12	1.41	80	-2.3	87	0.070	100	100	2.7	-0.008118	331	314	313	297	347	320	649	164	85	63	84	62	77	-0.028	9.8	0.02
384	57.288	60.495	0.15	0.16	1.80	80	-1.12	1.42	80	-2.3	87	0.070	100	100	2.7	-0.003784	331	314	313	297	346	320	649	164	84	63	84	62	77	-0.028	9.79	0.03

Wood Heater Test Data
Low Burn Emissions Data

Run: 4

Manufacturer: Kuma Stoves
Model: Aspen LE
Tracking No.: 2357
Project No.: 0123WM011E
Test Date: 26-Feb-19
Beginning Clock Time: 15:13

Total Sampling Time: 605 min
Recording Interval: 1 min
Background Sample Volume: 89.485 cubic feet

Meter Box Y Factor: 1.009 (1) 0.996 (2) 0.996 (Amb)

Barometric Pressure:	Begin	Middle	End	Average
	28.33	28.37	28.41	28.37 0

OMNI Equipment Numbers:

PM Control Modules: 371, 372
Dilution Tunnel MW(dry): 29.00 lb/lb-mole
Dilution Tunnel MW(wet): 28.78 lb/lb-mole
Dilution Tunnel H2O: 2.00 percent
Dilution Tunnel Static: -0.110 "H2O
Tunnel Area: 0.19635 ft2
Pitot Tube Cp: 0.99

Avg. Tunnel Velocity: 18.35 ft/sec.
Initial Tunnel Flow: 193.2 scfm
Average Tunnel Flow: 193.0 scfm
Post-Test Leak Check (1): 0.000 cfm @ 9 in. Hg
Post-Test Leak Check (2): 0.000 cfm @ 10 in. Hg
Average Test Piece Fuel Moisture: 20.37 Dry Basis %

Technician Signature:

Velocity Traverse Data	Pt.1	Pt.2	Pt.3	Pt.4	Pt.5	Pt.6	Pt.7	Pt.8	Center	
Initial dP	0.068	0.074	0.072	0.070	0.070	0.074	0.068	0.066	0.070	"H2O
Temp:	92	92	91	91	91	91	91	91	92	°F

V_{strav} 18.44 ft/sec V_{scent} 18.43 ft/sec F_p 1.001

	Particulate Sampling Data														Fuel Weight (lb)		Temperature Data (°F)												Stack Gas Data		
Elapsed Time (min)	Gas Meter 1 (ft^3)	Gas Meter 2 (ft^3)	Sample Rate 1 (cfm)	Sample Rate 2 (cfm)	Orifice dH 1 ("H_2O)	Meter 1 Temp (°F)	Meter 1 Vacuum ("Hg)	Orifice dH 2 ("H_2O)	Meter 2 Temp (°F)	Meter 2 Vacuum ("Hg)	Dilution Tunnel (°F)	Dilution Tunnel Center dP	Pro. Rate 1	Pro. Rate 2	Scale Reading	Weight Change	Firebox Top	Firebox Bottom	Firebox Back	Firebox Left	Firebox Right	Avg. Stove Surface	Catalyst Exit	Stack	Filter 1	Dryer Exit 1	Filter 2	Dryer Exit 2	Ambient	Draft ("H_2O)	CO_2 (%)	CO (%)
385	57.439	60.654	0.15	0.16	1.80	80	-1.15	1.42	80	-2.3	87	0.070	100	100	2.7	-0.013672	330	314	313	297	346	320	649	163	84	63	84	62	77	-0.027	9.86	0.03
386	57.589	60.813	0.15	0.16	1.83	80	-1.2	1.41	80	-2.3	87	0.070	100	100	2.6	-0.042053	330	314	313	297	345	320	650	163	84	63	84	62	77	-0.028	9.83	0.02
387	57.739	60.971	0.15	0.16	1.83	80	-1.13	1.41	80	-2.1	87	0.070	100	100	2.6	-0.003052	330	314	313	297	345	320	650	163	84	63	84	62	76	-0.028	9.88	0.02
388	57.889	61.129	0.15	0.16	1.83	80	-1.39	1.42	80	-2.3	87	0.070	100	100	2.6	0.001953	330	315	313	297	344	320	651	163	84	63	84	62	76	-0.028	9.93	0.02
389	58.039	61.288	0.15	0.16	1.81	80	-0.93	1.41	80	-2.2	87	0.070	100	100	2.6	-0.03186	330	315	313	297	344	320	652	163	84	63	84	62	77	-0.028	9.95	0.02
390	58.189	61.447	0.15	0.16	1.82	80	-1.29	1.41	80	-2.2	87	0.070	100	100	2.6	0.006866	330	315	313	297	343	320	653	163	84	63	84	62	77	-0.027	9.95	0.02
391	58.339	61.605	0.15	0.16	1.81	80	-1.37	1.40	80	-2.3	87	0.070	100	100	2.6	-0.029297	330	315	313	297	343	320	653	163	84	63	84	62	77	-0.028	9.94	0.02
392	58.490	61.763	0.15	0.16	1.81	80	-1.17	1.41	80	-2.3	87	0.070	100	100	2.6	0.000794	330	315	313	297	342	319	652	163	84	63	84	62	76	-0.027	9.92	0.02
393	58.640	61.921	0.15	0.16	1.82	80	-1.03	1.41	80	-2.2	87	0.070	100	100	2.6	-0.031311	329	315	313	297	342	319	651	163	84	63	84	62	77	-0.028	9.81	0.02
394	58.790	62.080	0.15	0.16	1.81	80	-1.39	1.41	80	-2.1	87	0.070	100	100	2.5	-0.00882	329	315	313	297	342	319	652	163	84	63	84	62	76	-0.028	9.81	0.02
395	58.939	62.239	0.15	0.16	1.82	80	-0.92	1.42	80	-2.1	87	0.070	99	100	2.5	-0.032135	329	315	313	297	341	319	652	162	84	63	84	62	76	-0.027	9.82	0.02
396	59.090	62.397	0.15	0.16	1.82	80	-0.92	1.42	80	-2.1	87	0.070	100	100	2.5	0.003907	329	315	313	297	341	319	652	163	84	63	84	62	77	-0.028	9.87	0.02
397	59.240	62.555	0.15	0.16	1.82	80	-0.99	1.41	80	-2.1	87	0.070	100	100	2.5	-0.016877	329	315	313	297	341	319	653	163	83	63	84	62	76	-0.028	9.85	0.02
398	59.390	62.714	0.15	0.16	1.81	80	-1.1	1.42	80	-2.2	87	0.070	100	100	2.5	-0.0401	329	315	313	297	340	319	653	163	83	63	84	62	76	-0.027	9.86	0.02
399	59.540	62.872	0.15	0.16	1.81	80	-1.17	1.41	80	-2.1	87	0.070	100	100	2.5	0.006226	329	316	313	297	340	319	653	164	84	63	84	62	77	-0.028	9.88	0.02
400	59.691	63.031	0.15	0.16	1.81	80	-1.36	1.41	80	-2.1	86	0.070	100	100	2.5	-0.016449	329	315	312	297	339	318	653	163	84	63	84	62	77	-0.028	9.86	0.02
401	59.841	63.189	0.15	0.16	1.82	80	-1.06	1.41	80	-2.2	87	0.070	100	100	2.4	-0.008515	329	316	312	297	339	319	653	163	84	63	84	62	76	-0.028	9.85	0.02
402	59.990	63.348	0.15	0.16	1.82	80	-0.94	1.40	80	-2.3	86	0.070	99	100	2.4	-0.033233	329	316	312	297	338	318	654	163	85	63	84	62	77	-0.028	9.83	0.02
403	60.140	63.506	0.15	0.16	1.82	80	-0.92	1.41	80	-2.3	86	0.070	100	100	2.4	-0.004212	329	316	312	297	338	318	653	163	85	63	84	62	76	-0.027	9.88	0.02
404	60.291	63.664	0.15	0.16	1.82	80	-0.92	1.42	80	-2.1	86	0.070	100	100	2.4	-0.034362	329	316	312	297	337	318	654	163	85	63	84	62	76	-0.028	9.91	0.02
405	60.441	63.823	0.15	0.16	1.81	80	-1.41	1.41	80	-2.1	87	0.070	100	100	2.4	-0.003113	329	316	312	297	337	318	654	162	85	63	84	62	76	-0.027	9.9	0.02
406	60.591	63.981	0.15	0.16	1.81	80	-0.92	1.41	80	-2.1	87	0.070	100	100	2.4	-0.005463	329	316	313	297	336	318	654	163	85	63	83	62	76	-0.028	9.88	0.02
407	60.741	64.140	0.15	0.16	1.80	80	-1.03	1.42	80	-2.1	87	0.070	100	100	2.4	-0.006073	329	317	312	297	336	318	653	162	85	63	83	62	75	-0.027	9.92	0.02
408	60.891	64.298	0.15	0.16	1.82	80	-0.99	1.40	80	-2.3	86	0.070	100	100	2.3	-0.032928	329	317	312	297	335	318	653	163	85	63	83	62	75	-0.028	9.91	0.02
409	61.042	64.456	0.15	0.16	1.83	80	-1.17	1.41	80	-2.3	86	0.070	100	100	2.3	0.002807	329	317	312	297	335	318	652	163	85	63	83	62	75	-0.027	9.91	0.02
410	61.191	64.615	0.15	0.16	1.83	80	-1	1.41	80	-2.3	86	0.070	99	100	2.3	-0.052734	329	317	312	297	335	318	651	162	85	63	83	62	76	-0.027	9.9	0.02
411	61.341	64.773	0.15	0.16	1.81	80	-1.4	1.42	80	-2.1	86	0.070	100	100	2.3	-0.00473	329	317	312	297	334	318	649	162	85	63	83	62	75	-0.027	9.91	0.03
412	61.491	64.931	0.15	0.16	1.81	80	-1.4	1.42	80	-2.3	86	0.070	100	100	2.3	0.003723	329	317	312	297	334	318	649	162	85	63	83	62	76	-0.027	9.85	0.03
413	61.641	65.090	0.15	0.16	1.81	80	-1.06	1.41	80	-2.1	86	0.070	100	100	2.3	-0.014557	329	318	312	297	333	318	649	162	85	63	83	62	76	-0.028	9.81	0.02
414	61.791	65.249	0.15	0.16	1.80	80	-1.24	1.41	80	-2.2	86	0.070	100	100	2.2	-0.027496	329	318	312	297	333	318	648	162	85	63	83	62	75	-0.028	9.79	0.02
415	61.942	65.407	0.15	0.16	1.81	80	-1.38	1.41	80	-2.2	86	0.070	100	100	2.2	0.002227	329	318	312	297	333	318	647	162	85	63	83	62	74	-0.027	9.78	0.02
416	62.092	65.565	0.15	0.16	1.80	80	-1.4	1.41	80	-2.2	86	0.070	100	100	2.2	-0.031891	329	318	312	298	332	318	647	162	85	63	83	62	75	-0.028	9.77	0.03
417	62.242	65.723	0.15	0.16	1.82	80	-1.38	1.42	80	-2.2	86	0.070	100	100	2.2	0.007538	328	319	312	298	332	318	647	162	85	63	83	62	74	-0.028	9.76	0.02
418	62.391	65.882	0.15	0.16	1.82	80	-0.99	1.41	80	-2.1	86	0.070	99	100	2.2	-0.024414	328	319	312	298	332	318	646	162	85	63	83	62	75	-0.028	9.79	0.03
419	62.542	66.040	0.15	0.16	1.82	80	-0.92	1.42	80	-2.2	86	0.070	100	100	2.2	-0.026184	328	319	312	298	331	318	646	162	85	63	83	62	75	-0.028	9.8	0.03

Wood Heater Test Data
Low Burn Emissions Data

Run: 4

Manufacturer: Kuma Stoves
Model: Aspen LE
Tracking No.: 2357
Project No.: 0123WM011E
Test Date: 26-Feb-19
Beginning Clock Time: 15:13

Total Sampling Time: 605 min
Recording Interval: 1 min
Background Sample Volume: 89.485 cubic feet

Meter Box Y Factor: 1.009 (1) 0.996 (2) 0.996 (Amb)

Barometric Pressure:	Begin	Middle	End	Average
	28.33	28.37	28.41	28.37 0

OMNI Equipment Numbers:

PM Control Modules: 371, 372
Dilution Tunnel MW(dry): 29.00 lb/lb-mole
Dilution Tunnel MW(wet): 28.78 lb/lb-mole
Dilution Tunnel H2O: 2.00 percent
Dilution Tunnel Static: -0.110 "H2O
Tunnel Area: 0.19635 ft2
Pitot Tube Cp: 0.99

Avg. Tunnel Velocity: 18.35 ft/sec.
Initial Tunnel Flow: 193.2 scfm
Average Tunnel Flow: 193.0 scfm
Post-Test Leak Check (1): 0.000 cfm @ 9 in. Hg
Post-Test Leak Check (2): 0.000 cfm @ 10 in. Hg
Average Test Piece Fuel Moisture: 20.37 Dry Basis %

Technician Signature:

Velocity Traverse Data	Pt.1	Pt.2	Pt.3	Pt.4	Pt.5	Pt.6	Pt.7	Pt.8	Center	
Initial dP	0.068	0.074	0.072	0.070	0.070	0.074	0.068	0.066	0.070	"H2O
Temp:	92	92	91	91	91	91	91	91	92	°F

V_{strav} 18.44 ft/sec V_{scent} 18.43 ft/sec F_p 1.001

	Particulate Sampling Data														Fuel Weight (lb)		Temperature Data (°F)												Stack Gas Data		
Elapsed Time (min)	Gas Meter 1 (ft^3)	Gas Meter 2 (ft^3)	Sample Rate 1 (cfm)	Sample Rate 2 (cfm)	Orifice dH 1 ("H_2O)	Meter 1 Temp (°F)	Meter 1 Vacuum ("Hg)	Orifice dH 2 ("H_2O)	Meter 2 Temp (°F)	Meter 2 Vacuum ("Hg)	Dilution Tunnel (°F)	Dilution Tunnel Center dP	Pro. Rate 1	Pro. Rate 2	Scale Reading	Weight Change	Firebox Top	Firebox Bottom	Firebox Back	Firebox Left	Firebox Right	Avg. Stove Surface	Catalyst Exit	Stack	Filter 1	Dryer Exit 1	Filter 2	Dryer Exit 2	Ambient	Draft ("H_2O)	CO_2 (%)	CO (%)
420	62.691	66.198	0.15	0.16	1.82	80	-1.38	1.42	80	-2.2	86	0.070	99	100	2.2	-0.008392	328	319	312	298	331	318	647	162	85	63	83	62	74	-0.028	9.8	0.03
421	62.842	66.357	0.15	0.16	1.81	80	-1.34	1.41	80	-2.3	86	0.070	100	100	2.1	-0.015686	328	319	312	298	330	317	648	162	85	63	83	62	74	-0.028	9.79	0.03
422	62.992	66.516	0.15	0.16	1.80	80	-1.13	1.42	80	-2.1	86	0.070	100	100	2.1	-0.033112	328	320	312	298	330	318	648	162	85	63	83	62	75	-0.028	9.75	0.03
423	63.142	66.674	0.15	0.16	1.82	80	-0.94	1.41	80	-2.1	86	0.070	100	100	2.1	-0.004547	328	320	312	298	330	318	649	162	85	63	83	62	75	-0.027	9.79	0.03
424	63.293	66.832	0.15	0.16	1.81	80	-0.92	1.41	80	-2.1	86	0.070	100	100	2.1	0.001862	328	320	312	299	329	318	648	163	85	63	83	62	75	-0.028	9.75	0.03
425	63.442	66.991	0.15	0.16	1.83	80	-1.35	1.42	80	-2.1	86	0.070	99	100	2.1	-0.03772	327	320	312	299	329	317	648	162	85	63	82	62	74	-0.028	9.69	0.03
426	63.592	67.149	0.15	0.16	1.82	80	-0.92	1.41	80	-2.3	86	0.070	100	100	2.1	0.000915	327	321	312	299	329	318	647	162	85	63	82	61	75	-0.027	9.76	0.03
427	63.742	67.308	0.15	0.16	1.82	80	-1.04	1.41	80	-2.2	86	0.070	100	100	2.1	-0.009918	327	321	312	299	328	317	646	162	85	63	82	62	75	-0.028	9.76	0.03
428	63.892	67.465	0.15	0.16	1.82	80	-1.25	1.42	80	-2.1	86	0.070	100	99	2.0	-0.028717	327	321	312	300	328	318	645	162	85	63	82	62	75	-0.028	9.72	0.03
429	64.042	67.624	0.15	0.16	1.80	80	-1.05	1.41	79	-2.1	85	0.070	100	100	2.0	-0.002044	327	322	312	300	328	318	645	162	85	62	82	61	75	-0.028	9.73	0.03
430	64.193	67.783	0.15	0.16	1.82	80	-0.91	1.41	79	-2.2	86	0.070	100	100	2.0	-0.029358	327	322	312	300	327	318	643	161	85	63	82	61	75	-0.028	9.58	0.02
431	64.343	67.941	0.15	0.16	1.82	80	-0.96	1.42	79	-2.1	85	0.070	100	100	2.0	-9.2E-05	326	322	312	300	327	317	642	162	85	63	82	61	75	-0.027	9.65	0.03
432	64.493	68.100	0.15	0.16	1.83	80	-1.39	1.41	80	-2.2	85	0.070	100	100	2.0	-0.024078	326	322	312	301	327	318	641	162	84	63	82	61	75	-0.028	9.6	0.03
433	64.642	68.258	0.15	0.16	1.82	80	-1.15	1.41	80	-2.3	85	0.070	99	99	2.0	-0.011109	326	323	312	301	326	318	641	162	84	63	82	61	75	-0.027	9.55	0.02
434	64.793	68.417	0.15	0.16	1.82	80	-1.38	1.41	80	-2.1	85	0.070	100	100	1.9	-0.038116	326	323	312	301	326	318	642	162	84	63	82	61	75	-0.028	9.56	0.03
435	64.943	68.575	0.15	0.16	1.81	80	-1.13	1.42	79	-2.3	85	0.070	100	100	1.9	-0.003723	326	323	312	302	326	318	645	161	84	62	82	61	75	-0.028	9.68	0.03
436	65.093	68.733	0.15	0.16	1.81	80	-1.13	1.42	79	-2.1	85	0.070	100	100	1.9	-0.002716	325	323	312	302	325	317	645	161	84	62	82	61	74	-0.028	9.72	0.03
437	65.243	68.892	0.15	0.16	1.81	80	-0.98	1.41	79	-2.3	85	0.070	100	100	1.9	-0.003662	325	323	312	302	325	317	645	161	84	62	82	61	75	-0.028	9.69	0.03
438	65.394	69.051	0.15	0.16	1.82	80	-1.18	1.41	79	-2.1	85	0.070	100	100	1.9	-0.035004	325	324	312	302	325	318	644	161	84	62	82	61	75	-0.028	9.62	0.03
439	65.544	69.208	0.15	0.16	1.81	80	-1.02	1.42	79	-2.1	85	0.070	100	99	1.8	-0.030121	325	324	312	302	324	317	643	161	84	62	82	61	75	-0.028	9.62	0.03
440	65.693	69.367	0.15	0.16	1.83	80	-0.96	1.41	79	-2.3	85	0.070	99	100	1.8	0.001526	325	324	312	303	324	318	642	161	84	62	82	61	75	-0.028	9.63	0.03
441	65.843	69.526	0.15	0.16	1.82	79	-1.1	1.42	79	-2.3	85	0.070	100	100	1.8	-0.023224	325	324	312	303	324	318	642	161	84	62	82	61	75	-0.028	9.57	0.03
442	65.993	69.684	0.15	0.16	1.82	79	-1.28	1.40	79	-2.2	85	0.070	100	100	1.8	-0.007202	325	324	312	303	323	317	642	161	84	62	82	61	75	-0.027	9.62	0.03
443	66.144	69.842	0.15	0.16	1.81	79	-0.91	1.41	79	-2.1	85	0.070	100	100	1.8	-0.004273	324	324	312	304	323	317	641	161	84	62	82	61	74	-0.028	9.58	0.02
444	66.294	70.001	0.15	0.16	1.80	79	-1.39	1.41	79	-2.1	85	0.070	100	100	1.8	-0.024475	324	324	312	304	323	317	639	161	84	62	82	61	75	-0.027	9.56	0.02
445	66.444	70.159	0.15	0.16	1.82	79	-1.26	1.41	79	-2.1	85	0.070	100	100	1.8	-0.012481	324	324	312	304	323	317	638	161	84	62	82	61	74	-0.027	9.55	0.02
446	66.594	70.318	0.15	0.16	1.82	79	-1.2	1.41	79	-2.3	85	0.070	100	100	1.8	0.000518	324	324	312	305	322	317	637	161	84	62	82	61	74	-0.028	9.48	0.02
447	66.744	70.476	0.15	0.16	1.83	79	-1.37	1.42	79	-2.2	85	0.070	100	100	1.7	-0.037139	323	324	312	305	322	317	635	161	84	62	82	61	74	-0.027	9.44	0.02
448	66.894	70.634	0.15	0.16	1.83	79	-1.06	1.41	79	-2.3	85	0.070	100	100	1.7	0.00653	323	324	312	305	321	317	633	160	84	62	82	61	74	-0.027	9.5	0.02
449	67.044	70.793	0.15	0.16	1.82	79	-1.1	1.42	79	-2.1	85	0.070	100	100	1.7	-0.015167	322	324	312	306	321	317	632	160	84	62	82	61	74	-0.027	9.42	0.02
450	67.194	70.952	0.15	0.16	1.81	79	-0.97	1.41	79	-2.2	85	0.070	100	100	1.7	-0.035858	322	324	312	306	321	317	630	160	84	62	81	61	74	-0.027	9.46	0.02
451	67.344	71.110	0.15	0.16	1.81	79	-1.02	1.41	79	-2.2	85	0.070	100	100	1.7	-0.001953	321	324	312	307	320	317	629	160	84	62	81	61	73	-0.027	9.5	0.02
452	67.495	71.268	0.15	0.16	1.80	79	-1.03	1.42	79	-2.2	85	0.070	100	100	1.7	-0.004517	321	324	312	307	320	317	628	160	84	62	80	61	73	-0.027	9.49	0.02
453	67.645	71.427	0.15	0.16	1.83	79	-1.4	1.41	79	-2.3	85	0.070	100	100	1.7	-0.001007	321	324	312	308	320	317	628	159	84	62	80	61	73	-0.027	9.53	0.02
454	67.795	71.586	0.15	0.16	1.83	79	-1.28	1.41	79	-2.2	85	0.070	100	100	1.7	-0.033478	320	324	312	308	320	317	628	160	85	62	81	61	73	-0.027	9.55	0.02

Wood Heater Test Data
Low Burn Emissions Data

Run: 4

Manufacturer: Kuma Stoves
Model: Aspen LE
Tracking No.: 2357
Project No.: 0123WM011E
Test Date: 26-Feb-19
Beginning Clock Time: 15:13

Total Sampling Time: 605 min
Recording Interval: 1 min
Background Sample Volume: 89.485 cubic feet

Meter Box Y Factor: 1.009 (1) 0.996 (2) 0.996 (Amb)

Barometric Pressure:	Begin	Middle	End	Average
	28.33	28.37	28.41	28.37 0

OMNI Equipment Numbers:

PM Control Modules: 371, 372
Dilution Tunnel MW(dry): 29.00 lb/lb-mole
Dilution Tunnel MW(wet): 28.78 lb/lb-mole
Dilution Tunnel H2O: 2.00 percent
Dilution Tunnel Static: -0.110 "H2O
Tunnel Area: 0.19635 ft2
Pitot Tube Cp: 0.99

Avg. Tunnel Velocity: 18.35 ft/sec.
Initial Tunnel Flow: 193.2 scfm
Average Tunnel Flow: 193.0 scfm
Post-Test Leak Check (1): 0.000 cfm @ 9 in. Hg
Post-Test Leak Check (2): 0.000 cfm @ 10 in. Hg
Average Test Piece Fuel Moisture: 20.37 Dry Basis %

Technician Signature:

Velocity Traverse Data	Pt.1	Pt.2	Pt.3	Pt.4	Pt.5	Pt.6	Pt.7	Pt.8	Center	
Initial dP	0.068	0.074	0.072	0.070	0.070	0.074	0.068	0.066	0.070	"H2O
Temp:	92	92	91	91	91	91	91	91	92	°F

V_{strav} 18.44 ft/sec V_{scent} 18.43 ft/sec F_p 1.001

	Particulate Sampling Data														Fuel Weight (lb)		Temperature Data (°F)												Stack Gas Data		
Elapsed Time (min)	Gas Meter 1 (ft^3)	Gas Meter 2 (ft^3)	Sample Rate 1 (cfm)	Sample Rate 2 (cfm)	Orifice dH 1 ("H_2O)	Meter 1 Temp (°F)	Meter 1 Vacuum ("Hg)	Orifice dH 2 ("H_2O)	Meter 2 Temp (°F)	Meter 2 Vacuum ("Hg)	Dilution Tunnel (°F)	Dilution Tunnel Center dP	Pro. Rate 1	Pro. Rate 2	Scale Reading	Weight Change	Firebox Top	Firebox Bottom	Firebox Back	Firebox Left	Firebox Right	Avg. Stove Surface	Catalyst Exit	Stack	Filter 1	Dryer Exit 1	Filter 2	Dryer Exit 2	Ambient	Draft ("H_2O)	CO_2 (%)	CO (%)
455	67.944	71.743	0.15	0.16	1.83	79	-0.92	1.42	79	-2.3	85	0.070	99	99	1.6	-0.01654	320	324	312	309	319	317	630	159	86	62	81	61	73	-0.027	9.63	0.02
456	68.095	71.902	0.15	0.16	1.82	79	-0.94	1.41	79	-2.2	85	0.070	100	100	1.6	-0.010254	320	324	312	309	319	317	630	159	87	62	82	61	74	-0.027	9.66	0.02
457	68.244	72.061	0.15	0.16	1.82	79	-0.95	1.41	79	-2.1	85	0.070	99	100	1.6	-0.013489	319	324	312	310	318	317	631	159	87	62	82	61	73	-0.027	9.64	0.02
458	68.394	72.219	0.15	0.16	1.81	79	-1.04	1.41	79	-2.3	85	0.070	100	100	1.6	-0.015533	319	324	312	310	318	317	631	159	87	62	82	61	73	-0.027	9.69	0.02
459	68.545	72.377	0.15	0.16	1.80	79	-1.26	1.41	79	-2.3	84	0.070	100	100	1.6	0.001465	319	324	312	310	318	317	631	159	87	62	83	61	73	-0.028	9.72	0.02
460	68.695	72.535	0.15	0.16	1.81	79	-0.91	1.42	79	-2.3	84	0.070	100	100	1.6	-0.044007	319	324	312	311	318	317	632	159	87	62	83	61	73	-0.027	9.77	0.02
461	68.845	72.694	0.15	0.16	1.80	79	-0.99	1.41	79	-2.1	84	0.070	100	100	1.5	-0.006073	319	324	312	312	318	317	633	159	86	62	83	61	74	-0.027	9.75	0.02
462	68.995	72.852	0.15	0.16	1.83	79	-1.23	1.41	79	-2.2	84	0.070	100	100	1.5	-0.017425	319	324	312	312	317	317	634	159	86	62	83	61	73	-0.027	9.72	0.02
463	69.145	73.010	0.15	0.16	1.82	79	-1.29	1.42	79	-2.3	85	0.070	100	100	1.5	-0.007019	319	324	312	313	317	317	635	159	86	62	83	61	74	-0.027	9.75	0.02
464	69.295	73.168	0.15	0.16	1.82	79	-1.41	1.41	79	-2.1	85	0.070	100	100	1.5	-0.017823	319	324	312	313	317	317	633	159	86	62	83	61	75	-0.027	9.73	0.02
465	69.445	73.327	0.15	0.16	1.82	79	-1.4	1.42	79	-2.2	84	0.070	100	100	1.5	-0.001403	319	324	311	314	317	317	633	159	86	62	83	61	74	-0.027	9.76	0.02
466	69.595	73.485	0.15	0.16	1.81	79	-1.18	1.41	79	-2.3	84	0.070	100	100	1.5	-0.031647	319	324	312	315	316	317	631	159	86	62	83	61	74	-0.027	9.79	0.02
467	69.745	73.643	0.15	0.16	1.80	79	-0.91	1.41	79	-2.3	84	0.070	100	100	1.5	-0.006165	319	324	311	316	316	317	630	159	86	62	83	61	74	-0.028	9.55	0.02
468	69.895	73.801	0.15	0.16	1.83	79	-1.36	1.41	79	-2.1	84	0.070	100	100	1.4	-0.033996	318	324	311	316	316	317	632	159	86	62	83	61	74	-0.027	9.53	0.02
469	70.046	73.960	0.15	0.16	1.82	79	-1.28	1.41	79	-2.3	84	0.070	100	100	1.4	0.008789	319	324	311	317	316	317	636	159	86	62	83	61	74	-0.027	9.43	0.03
470	70.195	74.118	0.15	0.16	1.83	79	-1.37	1.41	79	-2.2	84	0.070	99	100	1.4	-0.00586	319	324	311	318	315	317	638	159	86	62	83	61	73	-0.027	9.41	0.03
471	70.345	74.276	0.15	0.16	1.82	79	-1.4	1.41	79	-2.1	84	0.070	100	100	1.4	-0.044494	319	323	311	319	315	317	639	159	86	62	83	61	74	-0.027	9.34	0.03
472	70.495	74.434	0.15	0.16	1.82	79	-1.04	1.41	79	-2.3	84	0.070	100	100	1.4	-0.007447	319	323	311	320	314	317	638	159	86	62	83	61	74	-0.028	9.33	0.03
473	70.645	74.593	0.15	0.16	1.81	79	-1.4	1.42	79	-2.1	84	0.070	100	100	1.4	-0.004272	319	323	311	320	314	317	637	159	86	62	83	61	74	-0.028	9.24	0.03
474	70.795	74.751	0.15	0.16	1.81	79	-1.35	1.41	79	-2.3	84	0.070	100	100	1.4	-0.003113	320	323	311	321	314	318	636	160	86	62	83	61	75	-0.028	9.25	0.03
475	70.945	74.909	0.15	0.16	1.81	79	-1.13	1.41	79	-2.2	84	0.070	100	100	1.3	-0.037506	319	322	311	322	313	317	636	159	86	62	83	61	74	-0.028	9.21	0.03
476	71.095	75.067	0.15	0.16	1.82	79	-1.04	1.41	79	-2.1	84	0.070	100	100	1.3	-0.007782	319	322	311	322	313	317	635	160	86	62	83	61	74	-0.028	9.26	0.03
477	71.245	75.225	0.15	0.16	1.81	79	-1.2	1.40	79	-2.3	84	0.070	100	100	1.3	-0.001343	319	321	310	323	313	317	634	160	86	62	83	61	74	-0.028	9.25	0.03
478	71.394	75.383	0.15	0.16	1.82	79	-1.13	1.41	79	-2.1	84	0.070	99	100	1.3	-0.035461	319	321	310	324	313	317	633	160	86	62	83	61	74	-0.028	9.22	0.02
479	71.545	75.542	0.15	0.16	1.82	79	-1.16	1.40	79	-2.3	84	0.070	100	100	1.3	-0.028381	319	321	310	325	312	317	632	159	86	62	83	61	75	-0.029	9.23	0.02
480	71.694	75.699	0.15	0.16	1.82	79	-1.13	1.41	79	-2.3	84	0.070	99	99	1.3	0.000762	319	320	310	325	312	317	631	160	86	62	84	61	76	-0.029	9.21	0.02
481	71.844	75.857	0.15	0.16	1.81	79	-1.08	1.41	79	-2.1	84	0.070	100	100	1.3	-0.015716	318	320	309	326	312	317	630	160	86	62	84	61	75	-0.029	9.2	0.02
482	71.994	76.015	0.15	0.16	1.80	79	-1.1	1.41	79	-2.3	84	0.070	100	100	1.3	0.010132	318	320	309	327	312	317	629	159	86	62	84	61	76	-0.029	9.14	0.02
483	72.144	76.174	0.15	0.16	1.80	79	-0.95	1.41	79	-2.1	84	0.070	100	100	1.2	-0.022553	318	319	309	328	312	317	628	160	86	62	84	61	76	-0.029	9.2	0.02
484	72.294	76.332	0.15	0.16	1.82	79	-0.91	1.40	79	-2.3	84	0.070	100	100	1.2	-0.044555	318	319	309	328	312	317	627	159	86	62	84	61	74	-0.029	9.18	0.02
485	72.444	76.490	0.15	0.16	1.82	79	-1.07	1.41	79	-2.3	84	0.070	100	100	1.2	0.006744	317	318	308	329	311	317	625	159	86	62	84	61	74	-0.028	9.13	0.02
486	72.594	76.648	0.15	0.16	1.83	79	-1.2	1.41	79	-2.3	84	0.070	100	100	1.2	-0.001709	317	318	308	330	311	317	624	158	86	62	84	61	74	-0.028	9.11	0.02
487	72.744	76.806	0.15	0.16	1.81	79	-1.14	1.41	79	-2.3	84	0.070	100	100	1.2	0.00058	316	318	308	331	311	317	623	158	86	62	84	61	76	-0.028	9.14	0.02
488	72.893	76.964	0.15	0.16	1.81	79	-1.09	1.41	79	-2.3	84	0.070	99	100	1.2	-0.026764	316	317	307	332	311	317	622	159	86	62	84	61	76	-0.029	9.1	0.02
489	73.043	77.122	0.15	0.16	1.81	79	-1.38	1.41	79	-2.1	84	0.070	100	100	1.1	-0.031036	316	317	307	332	311	317	622	158	86	62	84	61	75	-0.029	9.11	0.02

Wood Heater Test Data
Low Burn Emissions Data

Run: 4

Manufacturer: Kuma Stoves
Model: Aspen LE
Tracking No.: 2357
Project No.: 0123WM011E
Test Date: 26-Feb-19
Beginning Clock Time: 15:13

Total Sampling Time: 605 min
Recording Interval: 1 min
Background Sample Volume: 89.485 cubic feet

Meter Box Y Factor: 1.009 (1) 0.996 (2) 0.996 (Amb)

Barometric Pressure:	Begin	Middle	End	Average	
	28.33	28.37	28.41	28.37	0

OMNI Equipment Numbers:

PM Control Modules: 371, 372
Dilution Tunnel MW(dry): 29.00 lb/lb-mole
Dilution Tunnel MW(wet): 28.78 lb/lb-mole
Dilution Tunnel H2O: 2.00 percent
Dilution Tunnel Static: -0.110 "H2O
Tunnel Area: 0.19635 ft2
Pitot Tube Cp: 0.99

Avg. Tunnel Velocity: 18.35 ft/sec.
Initial Tunnel Flow: 193.2 scfm
Average Tunnel Flow: 193.0 scfm
Post-Test Leak Check (1): 0.000 cfm @ 9 in. Hg
Post-Test Leak Check (2): 0.000 cfm @ 10 in. Hg
Average Test Piece Fuel Moisture: 20.37 Dry Basis %

Technician Signature:

Velocity Traverse Data	Pt.1	Pt.2	Pt.3	Pt.4	Pt.5	Pt.6	Pt.7	Pt.8	Center	
Initial dP	0.068	0.074	0.072	0.070	0.070	0.074	0.068	0.066	0.070	"H2O
Temp:	92	92	91	91	91	91	91	91	92	°F

V_{strav} 18.44 ft/sec V_{scent} 18.43 ft/sec F_p 1.001

	Particulate Sampling Data														Fuel Weight (lb)		Temperature Data (°F)												Stack Gas Data		
Elapsed Time (min)	Gas Meter 1 (ft^3)	Gas Meter 2 (ft^3)	Sample Rate 1 (cfm)	Sample Rate 2 (cfm)	Orifice dH 1 ("H_2O)	Meter 1 Temp (°F)	Meter 1 Vacuum ("Hg)	Orifice dH 2 ("H_2O)	Meter 2 Temp (°F)	Meter 2 Vacuum ("Hg)	Dilution Tunnel (°F)	Dilution Tunnel Center dP	Pro. Rate 1	Pro. Rate 2	Scale Reading	Weight Change	Firebox Top	Firebox Bottom	Firebox Back	Firebox Left	Firebox Right	Avg. Stove Surface	Catalyst Exit	Stack	Filter 1	Dryer Exit 1	Filter 2	Dryer Exit 2	Ambient	Draft ("H_2O)	CO_2 (%)	CO (%)
490	73.193	77.280	0.15	0.16	1.80	79	-0.96	1.41	79	-2.1	84	0.070	100	100	1.1	0.002685	315	317	307	333	311	317	621	158	86	62	84	61	76	-0.028	9.15	0.02
491	73.343	77.438	0.15	0.16	1.80	79	-1.37	1.41	79	-2.3	84	0.070	100	100	1.1	-0.024994	315	316	307	334	311	317	620	158	86	62	84	61	76	-0.028	9.15	0.02
492	73.493	77.596	0.15	0.16	1.81	79	-0.94	1.41	79	-2.2	84	0.070	100	100	1.1	0.002869	315	316	306	334	310	316	619	158	86	62	85	61	76	-0.028	9.13	0.02
493	73.643	77.754	0.15	0.16	1.80	79	-0.98	1.41	79	-2.3	84	0.070	100	100	1.1	-0.016602	314	316	306	335	310	316	618	158	86	62	85	61	76	-0.028	9.15	0.02
494	73.792	77.911	0.15	0.16	1.82	79	-1.26	1.41	79	-2.3	85	0.070	99	99	1.1	-0.002624	314	316	306	336	310	316	618	157	86	62	85	61	75	-0.028	9.11	0.02
495	73.942	78.070	0.15	0.16	1.82	79	-0.92	1.40	79	-2.1	85	0.070	100	100	1.1	-0.018402	313	315	306	336	310	316	617	157	86	62	84	61	75	-0.028	9.18	0.02
496	74.092	78.228	0.15	0.16	1.82	79	-1.34	1.41	79	-2.1	85	0.070	100	100	1.1	-0.018677	313	315	306	337	310	316	615	157	85	62	84	61	76	-0.028	9.15	0.02
497	74.242	78.386	0.15	0.16	1.80	79	-0.98	1.41	79	-2.3	84	0.070	100	100	1.1	0.001648	312	315	306	338	310	316	614	157	85	62	84	61	77	-0.028	8.9	0.02
498	74.392	78.544	0.15	0.16	1.80	79	-1.37	1.41	79	-2.3	84	0.070	100	100	1.0	-0.038788	312	314	305	339	310	316	611	156	85	62	84	61	76	-0.028	8.79	0.02
499	74.542	78.702	0.15	0.16	1.81	79	-1.07	1.41	79	-2.1	84	0.070	100	100	1.0	0.002136	311	314	305	339	309	316	608	155	84	62	84	61	75	-0.027	8.74	0.02
500	74.692	78.860	0.15	0.16	1.82	79	-1.13	1.41	79	-2.3	85	0.070	100	100	1.0	-0.003235	310	314	305	340	309	316	605	155	84	62	84	61	76	-0.028	8.67	0.02
501	74.842	79.018	0.15	0.16	1.80	79	-1.36	1.41	79	-2.2	84	0.070	100	100	1.0	-0.010528	309	314	305	340	309	315	602	155	84	62	84	61	75	-0.028	8.65	0.02
502	74.991	79.176	0.15	0.16	1.82	79	-1.19	1.40	79	-2.1	85	0.070	99	100	1.0	-0.038727	309	314	305	340	309	315	600	155	84	62	84	61	75	-0.027	8.65	0.02
503	75.142	79.334	0.15	0.16	1.82	79	-1.23	1.41	79	-2.3	85	0.070	100	100	1.0	0.00177	308	314	305	341	308	315	596	155	84	62	84	61	75	-0.027	8.63	0.02
504	75.291	79.492	0.15	0.16	1.82	79	-0.99	1.41	79	-2.3	84	0.070	99	100	1.0	0.003906	307	314	305	341	308	315	594	154	84	62	84	61	77	-0.027	8.58	0.02
505	75.441	79.650	0.15	0.16	1.81	79	-1.23	1.40	79	-2.1	84	0.070	100	100	1.0	-0.012115	306	314	305	342	308	315	592	154	84	62	84	61	76	-0.027	8.56	0.02
506	75.591	79.808	0.15	0.16	1.80	79	-0.98	1.40	79	-2.1	84	0.070	100	100	1.0	-0.000519	305	314	305	342	308	315	590	154	84	62	84	61	76	-0.027	8.54	0.02
507	75.741	79.966	0.15	0.16	1.79	79	-1.04	1.41	79	-2.1	84	0.070	100	100	0.9	-0.026459	304	314	305	342	307	314	588	153	84	62	84	61	76	-0.027	8.52	0.02
508	75.891	80.124	0.15	0.16	1.82	79	-1.23	1.41	79	-2.3	85	0.070	100	100	0.9	-0.010406	303	313	305	342	307	314	585	153	84	62	84	61	76	-0.027	8.49	0.02
509	76.041	80.282	0.15	0.16	1.83	79	-1.41	1.41	79	-2.2	85	0.070	100	100	0.9	-0.013153	302	313	304	342	307	314	583	153	84	62	84	61	77	-0.027	8.43	0.02
510	76.191	80.440	0.15	0.16	1.82	79	-1.29	1.41	79	-2.2	85	0.070	100	100	0.9	-0.000336	301	313	304	343	307	314	582	152	84	62	84	61	75	-0.027	8.38	0.02
511	76.341	80.598	0.15	0.16	1.81	79	-0.92	1.41	79	-2.2	85	0.070	100	100	0.9	-0.014557	300	313	304	343	306	313	580	152	84	62	84	61	76	-0.027	8.44	0.02
512	76.491	80.756	0.15	0.16	1.81	79	-1.03	1.41	79	-2.3	85	0.070	100	100	0.9	0.00119	299	313	304	343	306	313	578	152	84	62	84	61	76	-0.027	8.5	0.02
513	76.640	80.914	0.15	0.16	1.81	79	-1.22	1.40	79	-2.1	84	0.070	99	100	0.9	-0.02417	298	313	304	343	306	313	577	152	84	62	84	61	76	-0.026	8.46	0.02
514	76.790	81.072	0.15	0.16	1.81	79	-1.25	1.41	79	-2.2	84	0.070	100	100	0.9	0.002015	298	312	304	343	305	312	575	152	84	62	84	61	76	-0.026	8.47	0.02
515	76.940	81.230	0.15	0.16	1.81	79	-1.18	1.41	79	-2.1	84	0.070	100	100	0.9	-0.008637	297	312	304	343	305	312	574	151	84	62	84	61	77	-0.026	8.45	0.02
516	77.091	81.388	0.15	0.16	1.81	79	-0.93	1.41	79	-2.2	84	0.070	100	100	0.8	-0.036468	296	312	304	343	305	312	573	151	84	62	84	61	77	-0.026	8.42	0.02
517	77.240	81.545	0.15	0.16	1.80	79	-1.03	1.41	78	-2.1	84	0.070	99	99	0.8	-0.008301	295	312	304	343	304	312	571	151	84	62	84	61	76	-0.026	8.43	0.02
518	77.390	81.704	0.15	0.16	1.82	79	-0.91	1.40	79	-2.3	84	0.070	100	100	0.8	-0.002136	295	312	304	343	304	312	570	151	84	62	84	61	76	-0.026	8.43	0.02
519	77.540	81.862	0.15	0.16	1.82	79	-0.93	1.41	78	-2.2	84	0.070	100	100	0.8	0.003997	294	311	305	343	304	311	570	151	84	62	84	61	76	-0.026	8.43	0.02
520	77.689	82.020	0.15	0.16	1.81	79	-1.2	1.41	79	-2.2	84	0.070	99	100	0.8	0.000489	294	311	304	343	303	311	568	150	84	62	84	61	77	-0.026	8.43	0.02
521	77.839	82.178	0.15	0.16	1.80	79	-1.37	1.41	78	-2.2	84	0.070	100	100	0.8	-0.032349	293	311	304	343	303	311	567	150	84	62	84	61	77	-0.026	8.45	0.02
522	77.989	82.336	0.15	0.16	1.80	79	-1.3	1.41	79	-2.2	85	0.070	100	100	0.8	-0.019073	293	311	304	342	303	311	566	150	84	62	84	61	77	-0.026	8.37	0.02
523	78.139	82.494	0.15	0.16	1.80	79	-1.14	1.40	78	-2.2	84	0.070	100	100	0.8	0	292	310	304	342	303	310	565	150	84	62	84	61	76	-0.026	8.33	0.02
524	78.289	82.652	0.15	0.16	1.81	79	-1.22	1.41	78	-2.3	85	0.070	100	100	0.8	-0.02884	291	310	304	342	302	310	564	150	84	62	84	61	77	-0.026	8.18	0.02

Wood Heater Test Data
Low Burn Emissions Data

Run: 4

Manufacturer: Kuma Stoves
Model: Aspen LE
Tracking No.: 2357
Project No.: 0123WM011E
Test Date: 26-Feb-19
Beginning Clock Time: 15:13

Total Sampling Time: 605 min
Recording Interval: 1 min
Background Sample Volume: 89.485 cubic feet

Meter Box Y Factor: 1.009 (1) 0.996 (2) 0.996 (Amb)

Barometric Pressure:	Begin	Middle	End	Average	
	28.33	28.37	28.41	28.37	0

OMNI Equipment Numbers:

PM Control Modules: 371, 372
Dilution Tunnel MW(dry): 29.00 lb/lb-mole
Dilution Tunnel MW(wet): 28.78 lb/lb-mole
Dilution Tunnel H2O: 2.00 percent
Dilution Tunnel Static: -0.110 "H2O
Tunnel Area: 0.19635 ft2
Pitot Tube Cp: 0.99

Avg. Tunnel Velocity: 18.35 ft/sec.
Initial Tunnel Flow: 193.2 scfm
Average Tunnel Flow: 193.0 scfm
Post-Test Leak Check (1): 0.000 cfm @ 9 in. Hg
Post-Test Leak Check (2): 0.000 cfm @ 10 in. Hg
Average Test Piece Fuel Moisture: 20.37 Dry Basis %

Technician Signature:

Velocity Traverse Data	Pt.1	Pt.2	Pt.3	Pt.4	Pt.5	Pt.6	Pt.7	Pt.8	Center	
Initial dP	0.068	0.074	0.072	0.070	0.070	0.074	0.068	0.066	0.070	"H2O
Temp:	92	92	91	91	91	91	91	91	92	°F

V_{strav} 18.44 ft/sec V_{scent} 18.43 ft/sec F_p 1.001

	Particulate Sampling Data														Fuel Weight (lb)		Temperature Data (°F)												Stack Gas Data		
Elapsed Time (min)	Gas Meter 1 (ft^3)	Gas Meter 2 (ft^3)	Sample Rate 1 (cfm)	Sample Rate 2 (cfm)	Orifice dH 1 ("H_2O)	Meter 1 Temp (°F)	Meter 1 Vacuum ("Hg)	Orifice dH 2 ("H_2O)	Meter 2 Temp (°F)	Meter 2 Vacuum ("Hg)	Dilution Tunnel (°F)	Dilution Tunnel Center dP	Pro. Rate 1	Pro. Rate 2	Scale Reading	Weight Change	Firebox Top	Firebox Bottom	Firebox Back	Firebox Left	Firebox Right	Avg. Stove Surface	Catalyst Exit	Stack	Filter 1	Dryer Exit 1	Filter 2	Dryer Exit 2	Ambient	Draft ("H_2O)	CO_2 (%)	CO (%)
525	78.439	82.810	0.15	0.16	1.80	79	-0.94	1.41	78	-2.1	85	0.070	100	100	0.8	-0.003753	291	310	304	342	302	310	562	149	84	62	84	61	78	-0.026	8.17	0.02
526	78.588	82.967	0.15	0.16	1.82	79	-1.29	1.40	78	-2.1	85	0.070	99	99	0.7	-0.003113	290	310	305	342	302	310	561	149	84	62	84	61	78	-0.026	8.21	0.02
527	78.738	83.125	0.15	0.16	1.82	79	-1.17	1.41	78	-2.2	85	0.070	100	100	0.7	-0.017242	290	309	304	342	301	309	561	149	84	62	84	61	76	-0.026	8.18	0.02
528	78.888	83.283	0.15	0.16	1.82	79	-0.95	1.40	78	-2.3	85	0.070	100	100	0.7	0.001129	289	309	305	342	301	309	560	149	84	62	84	61	78	-0.026	8.16	0.02
529	79.038	83.442	0.15	0.16	1.81	79	-1.32	1.41	78	-2.1	85	0.070	100	101	0.7	0.001281	288	309	304	342	301	309	560	148	84	62	84	61	77	-0.026	8.14	0.02
530	79.188	83.599	0.15	0.16	1.80	79	-1.01	1.41	78	-2.2	85	0.070	100	99	0.7	-0.035522	288	309	305	342	300	309	559	148	84	62	84	61	77	-0.026	8.17	0.02
531	79.338	83.757	0.15	0.16	1.80	79	-1.32	1.40	78	-2.3	85	0.070	100	100	0.7	-0.000793	288	308	304	341	300	308	558	148	84	62	84	61	77	-0.026	8.16	0.02
532	79.488	83.915	0.15	0.16	1.82	79	-1.05	1.41	78	-2.1	85	0.070	100	100	0.7	9.1E-05	287	308	304	341	299	308	557	148	84	62	84	61	77	-0.026	8.17	0.02
533	79.637	84.073	0.15	0.16	1.79	79	-0.91	1.40	78	-2.1	85	0.070	99	100	0.7	-0.013122	287	308	304	341	299	308	558	148	84	62	84	61	76	-0.026	8.16	0.02
534	79.786	84.231	0.15	0.16	1.82	79	-0.91	1.41	78	-2.1	85	0.070	99	100	0.6	-0.036377	286	307	304	341	299	307	556	148	84	62	84	61	76	-0.026	8.16	0.02
535	79.936	84.389	0.15	0.16	1.82	79	-1.1	1.41	78	-2.1	85	0.070	100	100	0.6	-0.010193	286	307	304	341	298	307	557	148	84	62	84	61	77	-0.025	8.12	0.02
536	80.086	84.547	0.15	0.16	1.82	79	-1.3	1.40	78	-2.1	85	0.070	100	100	0.6	0.000946	286	307	304	340	298	307	556	147	84	62	83	61	77	-0.025	8.14	0.02
537	80.236	84.705	0.15	0.16	1.81	79	-1.29	1.41	78	-2.3	85	0.070	100	100	0.7	0.014984	285	307	304	340	298	307	555	147	84	62	83	61	76	-0.025	8.13	0.02
538	80.386	84.863	0.15	0.16	1.81	79	-0.97	1.41	78	-2.3	85	0.070	100	100	0.6	-0.009216	285	306	304	340	298	307	556	147	84	62	83	61	77	-0.025	8.18	0.02
539	80.536	85.021	0.15	0.16	1.79	79	-0.92	1.41	78	-2.1	85	0.070	100	100	0.6	-0.03183	284	306	304	340	297	306	555	147	84	62	83	61	77	-0.025	8.17	0.02
540	80.686	85.178	0.15	0.16	1.82	79	-1.1	1.41	78	-2.2	85	0.070	100	99	0.6	0.008667	284	305	303	339	297	306	555	147	84	62	83	61	76	-0.025	8.19	0.02
541	80.836	85.337	0.15	0.16	1.81	79	-0.92	1.40	78	-2.2	85	0.070	100	101	0.6	-0.003388	283	305	303	339	297	305	553	146	84	62	83	61	77	-0.025	8.11	0.02
542	80.985	85.495	0.15	0.16	1.82	79	-1.36	1.41	78	-2.1	85	0.070	99	100	0.6	-0.013885	283	305	303	339	296	305	553	146	84	62	83	61	76	-0.025	8.17	0.02
543	81.135	85.653	0.15	0.16	1.82	79	-1.41	1.40	78	-2.1	85	0.070	100	100	0.6	-0.002991	282	304	303	339	296	305	553	147	84	62	83	61	78	-0.025	8.18	0.02
544	81.285	85.811	0.15	0.16	1.81	79	-0.92	1.41	78	-2.1	85	0.070	100	100	0.6	-0.029694	282	304	303	339	295	305	553	147	84	62	83	61	78	-0.025	8.19	0.02
545	81.435	85.968	0.15	0.16	1.81	79	-1.12	1.41	78	-2.1	85	0.070	100	99	0.6	-0.002197	282	304	303	338	295	304	554	147	84	62	83	61	77	-0.025	8.21	0.02
546	81.584	86.126	0.15	0.16	1.81	79	-1.04	1.40	78	-2.1	85	0.070	99	100	0.6	-0.000671	281	304	303	338	295	304	554	146	84	62	83	61	78	-0.025	8.13	0.02
547	81.734	86.284	0.15	0.16	1.80	79	-1.31	1.41	78	-2.2	85	0.070	100	100	0.5	-0.024048	281	303	303	338	294	304	555	146	84	62	83	61	77	-0.025	8.17	0.02
548	81.884	86.443	0.15	0.16	1.82	79	-1.26	1.40	78	-2.3	85	0.070	100	101	0.5	0.000763	281	303	303	338	294	304	555	146	84	62	83	61	77	-0.025	8.17	0.02
549	82.035	86.600	0.15	0.16	1.82	78	-1.4	1.41	78	-2.3	85	0.070	101	99	0.5	-0.010437	281	303	303	337	294	304	555	146	84	62	83	61	77	-0.025	8.12	0.02
550	82.184	86.758	0.15	0.16	1.82	79	-0.91	1.41	78	-2.3	85	0.070	99	100	0.5	-0.005921	280	302	302	337	293	303	555	146	84	62	83	61	77	-0.025	8.07	0.02
551	82.333	86.916	0.15	0.16	1.82	79	-1.16	1.41	78	-2.2	85	0.070	99	100	0.5	-0.013092	280	302	302	337	293	303	553	146	84	62	83	61	77	-0.025	8.07	0.02
552	82.483	87.075	0.15	0.16	1.81	79	-1.34	1.41	78	-2.1	85	0.070	100	101	0.5	-0.000305	279	302	302	337	293	303	553	146	84	62	83	61	77	-0.025	8	0.02
553	82.633	87.232	0.15	0.16	1.81	79	-1.4	1.39	78	-2.1	85	0.070	100	99	0.5	0.001068	279	302	302	336	292	302	552	146	84	62	83	61	77	-0.025	8.02	0.02
554	82.783	87.390	0.15	0.16	1.81	78	-1.39	1.41	78	-2.2	85	0.070	100	100	0.5	0.002747	279	301	302	336	292	302	552	146	84	62	83	61	77	-0.025	7.9	0.02
555	82.933	87.548	0.15	0.16	1.79	78	-0.91	1.41	78	-2.3	85	0.070	100	100	0.5	-0.053162	278	301	302	336	292	302	550	146	84	62	83	61	78	-0.025	7.89	0.02
556	83.083	87.706	0.15	0.16	1.81	78	-1.19	1.41	78	-2.3	85	0.070	100	100	0.5	-0.003479	278	301	302	336	291	302	549	145	84	62	83	61	78	-0.025	7.79	0.02
557	83.233	87.865	0.15	0.16	1.81	78	-0.99	1.40	78	-2.3	85	0.070	100	101	0.5	0.003723	277	300	301	336	291	301	549	146	84	62	83	61	77	-0.025	7.79	0.02
558	83.383	88.022	0.15	0.16	1.82	78	-1.2	1.41	78	-2.3	85	0.070	100	99	0.5	0.002808	277	300	301	336	291	301	548	146	84	62	83	61	76	-0.025	7.65	0.02
559	83.532	88.180	0.15	0.16	1.82	78	-1.29	1.41	628	-2.1	85	0.050	117	58	0.4	-0.036133	277	300	301	335	290	301	547	146	84	62	83	61	77	-0.025	7.68	0.02

Wood Heater Test Data
Low Burn Emissions Data

Run: 4

Manufacturer: Kuma Stoves
Model: Aspen LE
Tracking No.: 2357
Project No.: 0123WM011E
Test Date: 26-Feb-19
Beginning Clock Time: 15:13

Total Sampling Time: 605 min
Recording Interval: 1 min
Background Sample Volume: 89.485 cubic feet

Meter Box Y Factor: 1.009 (1) 0.996 (2) 0.996 (Amb)

Barometric Pressure:	Begin	Middle	End	Average
	28.33	28.37	28.41	28.37 0

OMNI Equipment Numbers:

PM Control Modules: 371, 372
Dilution Tunnel MW(dry): 29.00 lb/lb-mole
Dilution Tunnel MW(wet): 28.78 lb/lb-mole
Dilution Tunnel H2O: 2.00 percent
Dilution Tunnel Static: -0.110 "H2O
Tunnel Area: 0.19635 ft2
Pitot Tube Cp: 0.99

Avg. Tunnel Velocity: 18.35 ft/sec.
Initial Tunnel Flow: 193.2 scfm
Average Tunnel Flow: 193.0 scfm
Post-Test Leak Check (1): 0.000 cfm @ 9 in. Hg
Post-Test Leak Check (2): 0.000 cfm @ 10 in. Hg
Average Test Piece Fuel Moisture: 20.37 Dry Basis %

Technician Signature:

Velocity Traverse Data	Pt.1	Pt.2	Pt.3	Pt.4	Pt.5	Pt.6	Pt.7	Pt.8	Center	
Initial dP	0.068	0.074	0.072	0.070	0.070	0.074	0.068	0.066	0.070	"H2O
Temp:	92	92	91	91	91	91	91	91	92	°F

V_{strav} 18.44 ft/sec V_{scent} 18.43 ft/sec F_p 1.001

	Particulate Sampling Data														Fuel Weight (lb)		Temperature Data (°F)												Stack Gas Data		
Elapsed Time (min)	Gas Meter 1 (ft^3)	Gas Meter 2 (ft^3)	Sample Rate 1 (cfm)	Sample Rate 2 (cfm)	Orifice dH 1 ("H_2O)	Meter 1 Temp (°F)	Meter 1 Vacuum ("Hg)	Orifice dH 2 ("H_2O)	Meter 2 Temp (°F)	Meter 2 Vacuum ("Hg)	Dilution Tunnel (°F)	Dilution Tunnel Center dP	Pro. Rate 1	Pro. Rate 2	Scale Reading	Weight Change	Firebox Top	Firebox Bottom	Firebox Back	Firebox Left	Firebox Right	Avg. Stove Surface	Catalyst Exit	Stack	Filter 1	Dryer Exit 1	Filter 2	Dryer Exit 2	Ambient	Draft ("H_2O)	CO_2 (%)	CO (%)
560	83.682	88.338	0.15	0.16	1.82	78	-0.94	1.41	78	-2.1	84	0.070	100	100	0.4	0.008911	276	299	301	335	290	300	544	146	84	62	83	61	77	-0.025	7.63	0.02
561	83.832	88.495	0.15	0.16	1.81	78	-0.91	1.41	78	-2.1	84	0.070	100	99	0.4	-0.008087	276	299	301	335	290	300	545	146	84	62	83	61	76	-0.025	7.63	0.02
562	83.981	88.654	0.15	0.16	1.80	78	-1.38	1.40	78	-2.1	85	0.070	99	101	0.4	-0.023559	275	299	300	335	289	300	544	146	84	62	83	61	78	-0.026	7.58	0.02
563	84.132	88.811	0.15	0.16	1.80	78	-1.4	1.42	78	-2.3	85	0.070	101	99	0.4	-0.002442	275	298	300	335	289	299	542	145	84	62	83	61	76	-0.025	7.57	0.02
564	84.281	88.969	0.15	0.16	1.81	78	-1.13	1.40	78	-2.3	84	0.080	93	93	0.4	-0.006134	274	298	300	334	289	299	542	145	84	62	83	61	77	-0.025	7.51	0.02
565	84.431	89.127	0.15	0.16	1.81	78	-1.14	1.41	78	-2.3	84	0.070	100	100	0.4	0.007202	274	298	300	334	288	299	541	145	84	62	83	61	76	-0.026	7.52	0.02
566	84.581	89.285	0.15	0.16	1.80	78	-0.92	1.41	78	-2.1	84	0.070	100	100	0.4	-0.028228	274	297	300	334	288	299	540	145	84	62	83	61	78	-0.026	7.49	0.02
567	84.730	89.443	0.15	0.16	1.81	78	-1.33	1.40	78	-2.1	85	0.070	99	100	0.4	-0.009644	273	297	299	334	288	298	539	145	84	62	83	61	76	-0.026	7.48	0.02
568	84.880	89.600	0.15	0.16	1.82	78	-1.1	1.42	78	-2.2	84	0.070	100	99	0.4	0.000488	273	296	299	334	287	298	538	145	84	62	83	61	77	-0.026	7.51	0.02
569	85.030	89.758	0.15	0.16	1.81	78	-1.06	1.40	78	-2.3	85	0.070	100	100	0.4	0.000763	272	296	299	333	287	297	537	145	84	62	83	61	76	-0.026	7.48	0.02
570	85.180	89.916	0.15	0.16	1.80	78	-0.97	1.41	78	-2.2	84	0.070	100	100	0.3	-0.02124	272	296	298	333	287	297	537	145	84	62	83	61	77	-0.026	7.46	0.02
571	85.330	90.074	0.15	0.16	1.79	78	-1.27	1.40	78	-2.1	84	0.070	100	100	0.3	-0.000336	271	295	298	333	286	297	535	145	84	62	84	61	76	-0.026	7.44	0.02
572	85.480	90.232	0.15	0.16	1.80	78	-0.95	1.40	78	-2.1	85	0.070	100	100	0.3	0	271	295	298	332	286	296	534	144	84	62	83	61	76	-0.026	7.42	0.02
573	85.629	90.390	0.15	0.16	1.81	78	-1.4	1.41	78	-2.1	85	0.070	99	100	0.3	-0.004577	270	294	298	332	285	296	535	144	84	62	83	61	76	-0.026	7.39	0.02
574	85.779	90.548	0.15	0.16	1.79	78	-1.16	1.40	78	-2.3	85	0.070	100	100	0.3	-0.011292	270	294	298	332	285	296	534	144	84	62	83	61	76	-0.026	7.37	0.02
575	85.928	90.706	0.15	0.16	1.82	78	-1.25	1.41	78	-2.1	85	0.070	99	100	0.3	-0.003631	269	294	298	332	284	295	531	144	84	62	83	61	75	-0.026	7.4	0.02
576	86.078	90.864	0.15	0.16	1.82	78	-1.35	1.39	78	-2.1	85	0.070	100	100	0.3	-0.033173	269	293	298	332	284	295	531	143	84	62	83	61	76	-0.026	7.37	0.02
577	86.228	91.022	0.15	0.16	1.82	78	-1.39	1.41	78	-2.3	85	0.070	100	100	0.3	-0.003906	269	293	297	331	284	295	531	143	84	62	83	61	76	-0.025	7.35	0.02
578	86.377	91.179	0.15	0.16	1.80	78	-1.36	1.41	78	-2.1	85	0.070	99	99	0.3	0.000763	268	293	297	331	283	294	531	143	84	62	84	61	76	-0.025	7.32	0.02
579	86.527	91.337	0.15	0.16	1.79	78	-1.09	1.40	78	-2.2	85	0.070	100	100	0.3	-0.012146	268	292	297	331	283	294	529	143	84	62	84	61	76	-0.026	7.25	0.02
580	86.677	91.495	0.15	0.16	1.80	78	-0.92	1.41	78	-2.2	85	0.070	100	100	0.3	0.002594	267	292	297	331	282	294	530	143	84	62	84	61	75	-0.026	7.23	0.02
581	86.827	91.653	0.15	0.16	1.80	78	-0.91	1.40	78	-2.2	85	0.070	100	100	0.2	-0.040131	267	292	296	330	282	293	530	143	84	62	84	61	76	-0.026	7.25	0.02
582	86.977	91.811	0.15	0.16	1.80	78	-1.12	1.41	78	-2.1	85	0.070	100	100	0.3	0.012543	266	291	296	330	281	293	529	143	84	62	84	61	75	-0.025	7.15	0.02
583	87.126	91.968	0.15	0.16	1.79	78	-1.38	1.41	78	-2.3	85	0.070	99	99	0.3	0.00061	266	291	296	330	281	293	528	142	84	62	84	61	76	-0.025	7.14	0.02
584	87.275	92.126	0.15	0.16	1.81	78	-0.99	1.40	78	-2.1	86	0.070	99	100	0.3	0.000397	265	290	295	329	281	292	527	142	84	62	84	61	75	-0.025	7.14	0.02
585	87.425	92.284	0.15	0.16	1.81	78	-1.11	1.41	78	-2.1	86	0.070	100	100	0.2	-0.018707	265	290	295	329	280	292	527	143	84	62	84	61	76	-0.025	7.14	0.02
586	87.574	92.442	0.15	0.16	1.81	78	-1.3	1.40	78	-2.1	86	0.070	99	100	0.2	0.000305	265	290	295	329	280	292	525	143	85	62	84	61	76	-0.025	7.1	0.02
587	87.724	92.599	0.15	0.16	1.80	78	-0.91	1.41	78	-2.2	86	0.070	100	99	0.2	-0.009369	264	289	294	329	280	291	524	142	84	62	84	61	76	-0.025	7.08	0.02
588	87.874	92.756	0.15	0.16	1.80	78	-1.26	1.41	78	-2.3	86	0.070	100	99	0.2	-0.018585	264	289	294	329	280	291	523	142	84	62	84	61	76	-0.026	7.08	0.02
589	88.024	92.914	0.15	0.16	1.80	78	-0.96	1.40	78	-2.3	86	0.070	100	100	0.2	0.002777	264	288	294	328	279	291	523	142	85	62	84	61	77	-0.025	7.02	0.02
590	88.174	93.072	0.15	0.16	1.80	78	-1.41	1.40	78	-2.1	86	0.070	100	100	0.2	-0.029389	263	288	293	328	278	290	524	142	85	62	84	61	76	-0.025	7.02	0.02
591	88.324	93.230	0.15	0.16	1.81	78	-0.91	1.40	78	-2.1	86	0.070	100	100	0.2	0.002716	263	287	293	328	278	290	522	141	85	62	84	61	76	-0.025	6.98	0.02
592	88.473	93.388	0.15	0.16	1.82	78	-1.3	1.40	78	-2.3	86	0.070	99	100	0.2	-0.003173	262	287	292	328	277	289	521	142	85	62	84	61	75	-0.025	7.02	0.02
593	88.622	93.545	0.15	0.16	1.81	78	-1.4	1.41	78	-2.3	86	0.070	99	99	0.2	0.000671	262	286	292	327	277	289	521	142	85	62	84	61	76	-0.025	6.99	0.02
594	88.772	93.703	0.15	0.16	1.81	78	-1.4	1.40	78	-2.1	86	0.070	100	100	0.2	-0.023041	262	286	292	327	277	289	520	142	85	62	84	61	75	-0.025	6.99	0.02

Wood Heater Test Data
Low Burn Emissions Data

Run: 4

Manufacturer: Kuma Stoves
Model: Aspen LE
Tracking No.: 2357
Project No.: 0123WM011E
Test Date: 26-Feb-19
Beginning Clock Time: 15:13

Total Sampling Time: 605 min
Recording Interval: 1 min
Background Sample Volume: 89.485 cubic feet

Meter Box Y Factor: 1.009 (1) 0.996 (2) 0.996 (Amb)

Barometric Pressure:	Begin	Middle	End	Average	
	28.33	28.37	28.41	28.37	0

OMNI Equipment Numbers:

PM Control Modules: 371, 372
Dilution Tunnel MW(dry): 29.00 lb/lb-mole
Dilution Tunnel MW(wet): 28.78 lb/lb-mole
Dilution Tunnel H2O: 2.00 percent
Dilution Tunnel Static: -0.110 "H2O
Tunnel Area: 0.19635 ft2
Pitot Tube Cp: 0.99

Avg. Tunnel Velocity: 18.35 ft/sec.
Initial Tunnel Flow: 193.2 scfm
Average Tunnel Flow: 193.0 scfm
Post-Test Leak Check (1): 0.000 cfm @ 9 in. Hg
Post-Test Leak Check (2): 0.000 cfm @ 10 in. Hg
Average Test Piece Fuel Moisture: 20.37 Dry Basis %

Technician Signature:

Velocity Traverse Data	Pt.1	Pt.2	Pt.3	Pt.4	Pt.5	Pt.6	Pt.7	Pt.8	Center	
Initial dP	0.068	0.074	0.072	0.070	0.070	0.074	0.068	0.066	0.070	"H2O
Temp:	92	92	91	91	91	91	91	91	92	°F

V_{strav} 18.44 ft/sec V_{scent} 18.43 ft/sec F_p 1.001

	Particulate Sampling Data														Fuel Weight (lb)		Temperature Data (°F)													Stack Gas Data		
Elapsed Time (min)	Gas Meter 1 (ft^3)	Gas Meter 2 (ft^3)	Sample Rate 1 (cfm)	Sample Rate 2 (cfm)	Orifice dH 1 ("H_2O)	Meter 1 Temp (°F)	Meter 1 Vacuum ("Hg)	Orifice dH 2 ("H_2O)	Meter 2 Temp (°F)	Meter 2 Vacuum ("Hg)	Dilution Tunnel (°F)	Dilution Tunnel Center dP	Pro. Rate 1	Pro. Rate 2	Scale Reading	Weight Change	Firebox Top	Firebox Bottom	Firebox Back	Firebox Left	Firebox Right	Avg. Stove Surface	Catalyst Exit	Stack	Filter 1	Dryer Exit 1	Filter 2	Dryer Exit 2	Ambient	Draft ("H_2O)	CO_2 (%)	CO (%)
595	88.922	93.861	0.15	0.16	1.80	78	-0.94	1.41	78	-2.3	86	0.070	100	100	0.2	-0.003387	261	286	291	327	276	288	520	141	85	62	84	61	76	-0.025	6.94	0.02
596	89.071	94.019	0.15	0.16	1.80	78	-1.04	1.40	78	-2.2	87	0.070	99	100	0.2	0.004852	261	285	291	326	276	288	518	141	85	62	84	61	75	-0.025	6.97	0.02
597	89.221	94.176	0.15	0.16	1.80	78	-1.37	1.40	78	-2.2	87	0.070	100	99	0.1	-0.023102	260	285	290	326	275	287	519	141	85	62	84	61	74	-0.025	6.9	0.02
598	89.371	94.334	0.15	0.16	1.80	78	-1.39	1.41	78	-2.3	87	0.070	100	100	0.1	0.004273	260	284	290	326	275	287	516	141	85	62	85	61	75	-0.025	6.93	0.02
599	89.520	94.492	0.15	0.16	1.82	78	-1	1.40	78	-2.3	87	0.070	99	100	0.1	-0.053009	260	284	289	326	274	287	517	141	85	62	85	61	74	-0.025	6.93	0.02
600	89.670	94.649	0.15	0.16	1.82	78	-1.29	1.41	78	-2.3	87	0.070	100	99	0.1	0.053527	259	283	289	325	274	286	515	140	85	62	85	61	74	-0.025	6.91	0.02
601	89.819	94.807	0.15	0.16	1.82	78	-1.2	1.40	78	-2.3	87	0.070	99	100	0.1	-0.068878	259	283	289	325	273	286	515	141	85	62	85	61	74	-0.024	6.87	0.02
602	89.969	94.965	0.15	0.16	1.81	78	-1.07	1.40	78	-2.2	87	0.070	100	100	0.1	0.011963	258	282	288	325	273	285	513	141	85	62	85	61	74	-0.024	6.87	0.02
603	90.118	95.122	0.15	0.16	1.81	78	-0.93	1.40	78	-2.1	87	0.070	99	99	0.1	0.001007	258	282	288	325	273	285	513	141	85	62	85	61	75	-0.024	6.87	0.02
604	90.268	95.280	0.15	0.16	1.81	78	-0.96	1.40	78	-2.1	87	0.070	100	100	0.1	0.000672	258	282	287	324	272	285	511	140	85	62	85	61	74	-0.024	6.88	0.02
605	90.417	95.437	0.15	0.16	1.80	79	-1.35	1.40	78	-2.1	87	0.070	99	99	0.0	-0.089722	257	281	287	324	272	284	513	140	85	62	85	61	75	-0.024	6.81	0.02
Avg/Tot	90.417	95.437	0.15	0.16	1.80	79		1.40	80		90	0.070	100	100								94.2				63	84	62	77	-0.033		

Wood Heater Lab Data

Manufacturer:	Kuma Stoves	Equipment Numbers:	
Model:	Aspen LE		
Tracking No.:	2357		
Project No.:	0123WM011E		
Run #:	4		
Date:	2/26/19		

TRAIN 1 (First Hour emissions)

Sample Component	Reagent	Filter, Probe or Dish #	Weights		
			Final, mg	Tare, mg	Particulate, mg
B. Front filter catch	Filter	T133S	96.5	87.2	9.3
C. Rear filter catch	Filter	T135S	103.2	91.1	12.1
D. Probe catch*	Probe				0.0
E. Filter seals catch*	Seals				0.0

Sub-Total | Total Particulate, mg: | 21.4

TRAIN 1 (Post First Hour Change-out)

Sample Component	Reagent	Filter, Probe or Dish #	Weights		
			Final, mg	Tare, mg	Particulate, mg
B. Front filter catch	Filter	T128AP	196.3	181.2	15.1
C. Rear filter catch	Filter	T138S	93.1	90.5	2.6
D. Probe catch*	Probe	32	114741.7	114740.8	0.9
E. Filter seals catch*	Seals	R731	3308.7	3308.8	0.0

Sub-Total | Total Particulate, mg: | 18.6

Train 1 Aggregate | Total Particulate, mg: | **40.0**

TRAIN 2

Sample Component	Reagent	Filter, Probe or Dish #	Weights		
			Final, mg	Tare, mg	Particulate, mg
A. Front filter catch	Filter	T128BP	191.7	181.2	10.5
B. Rear filter catch	Filter	T134/6/7S	303.9	268.8	35.1
C. Probe catch*	Probe	33	113944.1	113942.9	1.2
D. Filter seals catch*	Seals	R732	3262.7	3262.7	0.0

Total Particulate, mg: | **46.8**

AMBIENT

Sample Component	Reagent	Filter # or Probe #	Weights		
			Final, mg	Tare, mg	Particulate, mg
A. Front filter catch*	Filter	D665	119.9	120.1	0.0

Total Particulate, mg: | **0.0**

*Particulate catch that results in a negative number, is assumed to be zero for probes and seals, negative numbers for filters are assumed to be part of the seal weight.

Component	Equations:
A. Front filter catch	Final (mg) - Tare (mg) = Particulate, mg
B. Rear filter catch	Final (mg) - Tare (mg) = Particulate, mg
C. Probe catch	Final (mg) - Tare (mg) = Particulate, mg

Technician Signature: 

Wood Heater Test Results

Manufacturer: Kuma Stoves
Model: Aspen LE
Project No.: 0123WM011E
Tracking No.: 2357
Run: 4
Test Date: 02/26/19

Burn Rate	**0.74 kg/hr dry**
Average Tunnel Temperature	90 degrees Fahrenheit
Average Gas Velocity in Dilution Tunnel - vs	18.35 feet/second
Average Gas Flow Rate in Dilution Tunnel - Qsd	11577.4 dscf/hour
Average Delta p	0.070 inches H20
Total Time of Test	605 minutes

	AMBIENT	SAMPLE TRAIN 1	SAMPLE TRAIN 2	FIRST HOUR FILTER (TRAIN 1)
Total Sample Volume - Vm	89.485 cubic feet	90.417 cubic feet	95.437 cubic feet	8.849 cubic feet
Average Gas Meter Temperature	77 degrees Fahrenheit	79 degrees Fahrenheit	80 degrees Fahrenheit	77 degrees Fahrenheit
Total Sample Volume (Standard Conditions) - Vmstd	83.058 dscf	85.090 dscf	88.449 dscf	8.364 dscf
Total Particulates - m_n	0 mg	40 mg	46.8 mg	21.4 mg
Particulate Concentration (dry-standard) - C_r/C_s	0.000000 grams/dscf	0.00047 grams/dscf	0.00053 grams/dscf	0.00256 grams/dscf
Total Particulate Emissions - E_T	0.00 grams	54.88 grams	61.77 grams	29.62 grams
Particulate Emission Rate	0.00 grams/hour	5.44 grams/hour	6.13 grams/hour	29.62 grams/hour
Emissions Factor		7.38 g/kg	8.30 g/kg	19.08 g/kg
Difference from Average Total Particulate Emissions		3.45 grams	3.45 grams	
	Dual Train Comparison Results Are Acceptable			

FINAL AVERAGE RESULTS

Complete Test Run	
Total Particulate Emissions - E_T	58.32 grams
Particulate Emission Rate	**5.78 grams/hour**
Emissions Factor	7.84 grams/kg
First Hour Emissions	
Total Particulate Emissions - E_T	29.62 grams
Particulate Emission Rate	29.62 grams/hour
Emissions Factor	19.08 grams/kg
7.5% of Average Total Particulate Emissions	4.37 grams

QUALITY CHECKS

Filter Temps < 90 °F	OK
Filter Face Velocity (47 mm)	OK
Dryer Exit Temp < 80F	OK
Leakage Rate	OK
Ambient Temp (55-90°F)	OK
Negative Probe Weight Eval.	OK
Pro-Rate Variation	ECK 10 MIN. INTERVAL PRO-RAT

Technician Signature: 

Wood Heater Efficiency Results - CSA B415.1

Manufacturer: Kuma Stoves
Model: Aspen LE
Date: 02/26/19
Run: 4
Control #: 0123WM011E
Test Duration: 605
Output Category: I

Technician Signature: 

Test Results in Accordance with CSA B415.1-09

	HHV Basis	LHV Basis
Overall Efficiency	79.1%	85.5%
Combustion Efficiency	93.8%	93.8%
Heat Transfer Efficiency	84%	91.1%

Output Rate (kJ/h)	11,606	11,009	**(Btu/h)**
Burn Rate (kg/h)	0.74	1.63	**(lb/h)**
Input (kJ/h)	14,670	13,916	**(Btu/h)**

Test Load Weight (dry kg)	7.47	16.46	**dry lb**
MC wet (%)	16.92512184		
MC dry (%)	20.37		
Particulate (g)	5.78		
CO (g)	652		
Test Duration (h)	10.08		

Emissions	Particulate	CO
g/MJ Output	0.05	5.57
g/kg Dry Fuel	0.77	87.31
g/h	0.57	64.66
lb/MM Btu Output	0.11	12.95

Air/Fuel Ratio (A/F)	11.04

VERSION: **2.2** **12/14/2009**

Adjunct to ASTM E XXXX Wood Heater Cordwood Test Method - May 10, 2017 Version

Cordwood Fuel Load Calculators - 12 lb/ft^3 Nominal Load Density

Core 45-65% of Total Load Weight, Remainder 35-55% of Total Load Weight

Values to be input manually

THIS DOCUMENT IS NOT AN ASTM STANDARD; IT IS UNDER CONSIDERATION WITHIN AN ASTM TECHNICAL COMMITTEE BUT HAS NOT RECEIVED ALL APPROVALS REQUIRED TO BECOME AN ASTM STANDARD. IT SHALL NOT BE REPRODUCED OR CIRCULATED OR QUOTED, IN WHOLE OR IN PART, OUTSIDE OF ASTM COMMITTEE ACTIVITIES EXCEPT WITH THE APPROVAL OF THE CHAIRMAN OF THE COMMITTEE HAVING JURISDICTION AND THE PRESIDENT OF THE SOCIETY. *COPYRIGHT ASTM, 100 BARR HARBOR DRIVE, WEST CONSHOHOCKEN, PA 19428. ALL RIGHTS RESERVED.*

For Usable Firebox Volumes up to 3.0 ft^3 - Low and Medium Fire

Nominal Required Load Density (wet basis)	12	lb/ft^3				
Usable Firebox Volume	1.74	ft^3				
Total Nom. Load Wt. Target	20.832	lb				
Total Load Wt. Allowable Range	19.79	to	21.87	lb		
Core Target Wt. Allowable Range	9.3744	to	13.54	lb		
Remainder Load Wt. Allowable Range	7.29	to	11.46	lb		
						Mid-Point
Core Load Fuel Pc. Wt. Allowable Range	3.12	to	5.21	lb		4.17
Remainder Load Pc. Wt. Allowable Range	2.08	to	6.25	lb		4.17
	Pc. #					
Core Load Piece Wt. Actual	1	3.60	lb	In Range		
	2	5.00	lb	In Range		
	3	3.41	lb	In Range		
Core Load Total. Wt. Actual		12.01	lb	In Range		
	Pc. #					
Remainder Load Piece Wt.	1	2.38	lb	In Range		
(2 or 3 Pcs.)	2	5.44	lb	In Range		
	3		lb	NA		
Remainder Load Piece Weight Ratio - Small/Large		44%		In Range		≤ 67%
Remainder Load Tot. Wt. Act		7.81	lb	In Range		
Total Load Wt. Actual		19.82	lb	In Range		
Core % of Total Wt.		61%		In Range		45-65%
Remainder % of Total Wt.		39%		In Range		35-55%
Actual Load % of Nominal Target		95%		In Range		95-105%
Actual Fuel Load Density		11.4	lb/ft^3			
Allowable Charcoal Bed Wt. Range (lb)	2.0	to	3.9			Mid-Point
Actual Charcoal Bed Wt.		2.5	lb	In Range		3.0
Actual Fuel Load Ending Wt.		0.0	lb	Valid Test		≥ 90%
Total Wt. of Fuel Burned During Test Run lb.		19.8	lb			

Fuel Piece Moisture Reading (%-dry basis)

1	2	3	Ave.		Pc. Wt. Dry Basis			
19.4	19.8	22.2	20.5	In Range	2.98	lb	1.35	kg
19	17.1	24.8	20.3	In Range	4.16	lb	1.89	kg
19.8	17.3	22.8	20.0	In Range	2.84	lb	1.29	kg
16.9	17.7	20.4	18.3	In Range	2.01	lb	0.91	kg
18.7	22.6	27.7	23.0	In Range	4.42	lb	2.01	kg
			NA	NA	NA	lb	NA	kg

Total Load Ave. MC % (dry basis)	20.8	In Range			
Total Load Ave. MC % (wet basis)	17.2				
Total Test Load Weight (dry basis) →			16.41	lb	7.44 kg
Total Fuel Weight Burned During Test Run (dry basis)			16.4	lb	7.44 kg

OMNI-Test Laboratories, Inc.

Wood Heater Run Sheets

Client: Kuma Stoves Project Number: 0123WM011E Run Number: 4
Model: Aspen LE Tracking Number: 2357 Date: 2/28/19
Test Crew: D Davis
OMNI Equipment ID numbers:

Wood Heater Run Notes

Air Control Settings

Primary: 1/32" from full closed.

Secondary: fixed

Tertiary/Pilot: N/A

Fan: on Low

Preburn Notes

Time	Notes
N/A	

Test Notes

Sketch test fuel configuration: see photo

Start up procedures & Timeline:

Bypass: closed by 1:22
Fuel loaded by: 1:22
Door closed at: 1:22
Primary air: fully open until 15 min
Notes: fan was off for first 30 min then turned to Low.

Time	Notes
60	changed front filter in train A

Technician Signature: D Davis Date: 4/1/19

OMNI-Test Laboratories, Inc.

Wood Heater Run Sheets

Client: Kuma Stoves Project Number: 0123WM011E Run Number: 4
Model: Aspen LE Tracking Number: 2357 Date: 2/28/19
Test Crew: BD, DAvis
OMNI Equipment ID numbers:

Wood Heater Supplemental Data

Start Time: 1513 Booth #: N/A
Stop Time: 0918

Stack Gas Leak Check:
Initial: good Final: good

Sample Train Leak Check:
A: 0.0 @ 14 "Hg
B: 0.0 @ 15 "Hg

Calibrations: Span Gas CO_2: 12.40 CO: 2.48

	Pre Test		Post Test	
	Zero	Span	Zero	Span
Time	1456	1456	0122	0122
CO_2	0.00	12.40	0.11	12.49
CO	0.000	2.478	-0.012	2.446

Air Velocity (ft/min): Initial: <50 Final: <50
Scale Audit (lbs): Initial: 10.0 Final: 10.0
Pitot Tube Leak Test: Initial: good Final: good
Stack Diameter (in): 6"
Induced Draft: 0.0
% Smoke Capture: 100 %
Flue Pipe Cleaned Prior to First Test in Series:
Date: 2/25/19 Initials: BS

	Initial	Middle	Ending
P_b (in/Hg)	28.33		28.41
RH (%)	25		18
Ambient (°F)	76		75

Tunnel Traverse

Microtector Reading	dP (in H_2O)	T(°F)
	.068	92
	.074	92
	.072	91
	.070	91
	~~.066~~ .072	91
	.074	91
	.068	91
	.066	91
Center:		
	.070	92

Tunnel Static Pressure (in H_2O):	
Beginning of Test	End of Test
-.110	-.110

Background Filter Volume: 89.485

Technician Signature: BD Date: 4/3/19

Run 5 Pre

Non-Particulate Sampling High Burn

Wood Heater Test Data
Non-Sampling High Burn Data

Run: 5 Pre

Manufacturer: Kuma Stoves
Model: Aspen LE
Tracking No.: 2357
Project No.: 0123WM011E
Test Date: 04-Mar-19
Beginning Clock Time: 11:35

Total Sampling Time: 178 min
Recording Interval: 1 min
Background Sample Volume: _____ cubic feet

Meter Box Y Factor: 1.009 (1) 0.996 (2) 0.998 (Amb)

Barometric Pressure: Begin _____ Middle _____ End _____ Average 0

OMNI Equipment Numbers: _____

PM Control Modules: 371, 372
Dilution Tunnel MW(dry): 29.00 lb/lb-mole
Dilution Tunnel MW(wet): 28.78 lb/lb-mole
Dilution Tunnel H2O: 2.00 percent
Dilution Tunnel Static: _____ "H2O
Tunnel Area: 0.19635 ft2
Pitot Tube Cp: 0.99

Avg. Tunnel Velocity: #DIV/0! ft/sec.
Initial Tunnel Flow: #DIV/0! scfm
Average Tunnel Flow: #DIV/0! scfm
Post-Test Leak Check (1): _____ cfm @ _____ in. Hg
Post-Test Leak Check (2): _____ cfm @ _____ in. Hg
Average Test Piece Fuel Moisture: 21.51 Dry Basis %

Technician Signature: _____

Velocity Traverse Data

	Pt.1	Pt.2	Pt.3	Pt.4	Pt.5	Pt.6	Pt.7	Pt.8	Center	
Initial dP										"H2O
Temp:										°F

V_{strav} _____ ft/sec V_{scent} _____ ft/sec F_p _____

	Particulate Sampling Data														Fuel Weight (lb)		Temperature Data (°F)													Stack Gas Data		
Elapsed Time (min)	Gas Meter 1 (ft^3)	Gas Meter 2 (ft^3)	Sample Rate 1 (cfm)	Sample Rate 2 (cfm)	Orifice dH 1 ("H_2O)	Meter 1 Temp (°F)	Meter 1 Vacuum ("Hg)	Orifice dH 2 ("H_2O)	Meter 2 Temp (°F)	Meter 2 Vacuum ("Hg)	Dilution Tunnel (°F)	Dilution Tunnel Center dP	Pro. Rate 1	Pro. Rate 2	Scale Reading	Weight Change	Firebox Top	Firebox Bottom	Firebox Back	Firebox Left	Firebox Right	Avg. Stove Surface	Catalyst Exit	Stack	Filter 1	Dryer Exit 1	Filter 2	Dryer Exit 2	Ambient	Draft ("H_2O)	CO_2 (%)	CO (%)
0															8.5		64	53	54	56	56	57	63	75					61			
1															8.4		65	53	55	56	57	57	258	95					61			
2															8.4		69	53	55	56	57	58	265	96					61			
3															8.3		73	53	55	57	57	59	302	101					61			
4															8.3		78	53	56	59	58	61	335	114					61			
5															8.2		83	54	56	60	59	62	410	144					61			
6															8.2		90	54	57	63	61	65	540	184					61			
7															8.1		101	54	59	66	62	68	608	221					61			
8															8.0		113	54	60	69	65	72	595	243					62			
9															7.9		125	54	62	72	67	76	595	268					62			
10															7.8		135	54	65	76	70	80	590	290					62			
11															7.7		148	54	68	79	72	85	644	297					62			
12															7.6		165	55	72	84	75	90	749	312					62			
13															7.4		184	55	76	88	78	96	870	334					62			
14															7.3		205	55	80	93	82	103	950	357					62			
15															7.1		232	55	85	99	86	111	1020	395					62			
16															7.0		267	55	91	105	91	122	1182	395					62			
17															6.8		306	56	97	112	95	133	1189	410					63			
18															6.7		341	56	104	119	101	144	1194	423					63			
19															6.5		374	56	113	126	106	155	1222	435					63			
20															6.3		408	57	122	134	112	167	1221	447					63			
21															6.1		440	57	131	141	119	178	1222	454					63			
22															6.0		469	58	140	149	125	188	1214	462					63			
23															5.8		494	59	150	156	132	198	1259	470					63			
24															5.6		521	60	159	164	139	208	1276	481					63			
25															5.4		544	60	168	171	146	218	1286	484					63			
26															5.2		564	62	177	178	153	227	1248	484					63			
27															5.1		580	63	186	186	160	235	1248	486					64			
28															4.9		594	65	194	193	167	243	1266	488					64			
29															4.7		609	67	201	200	174	250	1263	489					64			
30															4.6		619	69	209	207	182	257	1187	489					64			
31															4.4		621	71	215	215	190	262	1143	487					64			
32															4.3		623	74	222	222	197	268	1148	484					64			
33															4.1		625	77	228	228	205	273	1156	482					64			
34															4.0		630	80	233	235	213	278	1211	482					64			

Wood Heater Test Data
Non-Sampling High Burn Data

Run: 5 Pre

Manufacturer: Kuma Stoves
Model: Aspen LE
Tracking No.: 2357
Project No.: 0123WM011E
Test Date: 04-Mar-19
Beginning Clock Time: 11:35

Total Sampling Time: 178 min
Recording Interval: 1 min
Background Sample Volume: _____ cubic feet

Meter Box Y Factor: 1.009 (1) 0.996 (2) 0.998 (Amb)

Barometric Pressure: Begin _____ Middle _____ End _____ Average 0

OMNI Equipment Numbers: _____

PM Control Modules: 371, 372
Dilution Tunnel MW(dry): 29.00 lb/lb-mole
Dilution Tunnel MW(wet): 28.78 lb/lb-mole
Dilution Tunnel H2O: 2.00 percent
Dilution Tunnel Static: _____ "H2O
Tunnel Area: 0.19635 ft2
Pitot Tube Cp: 0.99

Avg. Tunnel Velocity: #DIV/0! ft/sec.
Initial Tunnel Flow: #DIV/0! scfm
Average Tunnel Flow: #DIV/0! scfm
Post-Test Leak Check (1): _____ cfm @ _____ in. Hg
Post-Test Leak Check (2): _____ cfm @ _____ in. Hg
Average Test Piece Fuel Moisture: 21.51 Dry Basis %

Technician Signature: _____

Velocity Traverse Data

	Pt.1	Pt.2	Pt.3	Pt.4	Pt.5	Pt.6	Pt.7	Pt.8	Center	
Initial dP										"H2O
Temp:										°F

V_{strav} _____ ft/sec V_{scent} _____ ft/sec F_p _____

	Particulate Sampling Data														Fuel Weight (lb)		Temperature Data (°F)													Stack Gas Data		
Elapsed Time (min)	Gas Meter 1 (ft^3)	Gas Meter 2 (ft^3)	Sample Rate 1 (cfm)	Sample Rate 2 (cfm)	Orifice dH 1 ("H_2O)	Meter 1 Temp (°F)	Meter 1 Vacuum ("Hg)	Orifice dH 2 ("H_2O)	Meter 2 Temp (°F)	Meter 2 Vacuum ("Hg)	Dilution Tunnel (°F)	Dilution Tunnel Center dP	Pro. Rate 1	Pro. Rate 2	Scale Reading	Weight Change	Firebox Top	Firebox Bottom	Firebox Back	Firebox Left	Firebox Right	Avg. Stove Surface	Catalyst Exit	Stack	Filter 1	Dryer Exit 1	Filter 2	Dryer Exit 2	Ambient	Draft ("H_2O)	CO_2 (%)	CO (%)
35															3.8		636	84	239	241	220	284	1230	482					64			
36															3.7		642	87	244	248	227	290	1195	481					65			
37															3.6		644	91	249	254	235	295	1154	478					65			
38															3.4		644	95	255	260	242	299	1135	472					65			
39															3.3		643	100	260	267	250	304	1145	470					65			
40															3.2		643	104	265	273	258	309	1113	467					65			
41															3.1		642	108	271	279	265	313	1114	465					65			
42															3.0		643	113	276	286	273	318	1164	463					65			
43															2.9		644	118	282	293	280	323	1175	463					65			
44															2.7		644	123	287	300	288	328	1121	462					65			
45															2.6		643	129	292	307	295	333	1077	461					66			
46															2.5		640	134	297	315	302	338	1041	456					66			
47															2.4		635	140	303	323	309	342	1000	451					66			
48															2.4		629	146	308	331	316	346	947	447					66			
49															2.3		622	152	314	339	322	350	909	441					66			
50															2.2		613	158	319	346	328	353	852	435					66			
51															2.2		604	163	325	352	334	356	842	432					66			
52															2.1		596	168	330	358	340	358	834	428					66			
53															2.1		587	174	334	364	345	361	815	424					67			
54															11.9		574	187	339	369	349	364	540	507					67			
55															18.3		556	191	344	374	354	364	734	404					67			
56															18.1		554	196	348	378	358	366	883	433					67			
57															18.0		556	200	351	381	362	370	962	453					67			
58															17.8		563	205	355	384	365	374	1108	463					67			
59															17.6		547	210	354	386	365	372	1103	466					67			
60															17.5		542	214	348	388	367	372	1093	468					67			
61															17.3		536	218	342	390	370	371	1139	465					67			
62															17.1		532	221	337	391	372	371	1188	462					68			
63															16.9		529	224	331	393	374	370	1163	462					68			
64															16.8		527	226	326	394	376	370	1148	461					68			
65															16.6		527	227	321	396	380	370	1144	462					68			
66															16.5		527	229	317	397	383	370	1180	462					68			
67															16.3		527	230	314	398	386	371	1185	462					68			
68															16.1		528	231	311	399	389	372	1189	462					68			
69															16.0		529	232	309	400	393	372	1198	461					68			

Wood Heater Test Data
Non-Sampling High Burn Data

Run: 5 Pre

Manufacturer: Kuma Stoves
Model: Aspen LE
Tracking No.: 2357
Project No.: 0123WM011E
Test Date: 04-Mar-19
Beginning Clock Time: 11:35

Total Sampling Time: 178 min
Recording Interval: 1 min
Background Sample Volume: _____ cubic feet

Meter Box Y Factor: 1.009 (1) 0.996 (2) 0.998 (Amb)

Barometric Pressure: Begin _____ Middle _____ End _____ Average 0

OMNI Equipment Numbers: _____

PM Control Modules: 371, 372
Dilution Tunnel MW(dry): 29.00 lb/lb-mole
Dilution Tunnel MW(wet): 28.78 lb/lb-mole
Dilution Tunnel H2O: 2.00 percent
Dilution Tunnel Static: _____ "H2O
Tunnel Area: 0.19635 ft2
Pitot Tube Cp: 0.99

Avg. Tunnel Velocity: #DIV/0! ft/sec.
Initial Tunnel Flow: #DIV/0! scfm
Average Tunnel Flow: #DIV/0! scfm
Post-Test Leak Check (1): _____ cfm @ _____ in. Hg
Post-Test Leak Check (2): _____ cfm @ _____ in. Hg
Average Test Piece Fuel Moisture: 21.51 Dry Basis %

Technician Signature: _____

Velocity Traverse Data

	Pt.1	Pt.2	Pt.3	Pt.4	Pt.5	Pt.6	Pt.7	Pt.8	Center	
Initial dP										"H2O
Temp:										°F

V_{strav} _____ ft/sec V_{scent} _____ ft/sec F_p _____

	Particulate Sampling Data														Fuel Weight (lb)		Temperature Data (°F)													Stack Gas Data		
Elapsed Time (min)	Gas Meter 1 (ft^3)	Gas Meter 2 (ft^3)	Sample Rate 1 (cfm)	Sample Rate 2 (cfm)	Orifice dH 1 ("H_2O)	Meter 1 Temp (°F)	Meter 1 Vacuum ("Hg)	Orifice dH 2 ("H_2O)	Meter 2 Temp (°F)	Meter 2 Vacuum ("Hg)	Dilution Tunnel (°F)	Dilution Tunnel Center dP	Pro. Rate 1	Pro. Rate 2	Scale Reading	Weight Change	Firebox Top	Firebox Bottom	Firebox Back	Firebox Left	Firebox Right	Avg. Stove Surface	Catalyst Exit	Stack	Filter 1	Dryer Exit 1	Filter 2	Dryer Exit 2	Ambient	Draft ("H_2O)	CO_2 (%)	CO (%)
70															15.8		529	232	307	402	396	373	1223	462					69			
71															15.6		530	232	306	403	399	374	1249	463					69			
72															15.4		533	233	305	405	402	375	1273	463					69			
73															15.3		535	233	304	406	406	377	1272	465					69			
74															15.1		538	233	303	408	408	378	1269	466					69			
75															14.9		541	233	303	410	411	379	1265	466					69			
76															14.8		544	232	303	412	414	381	1271	465					69			
77															14.6		547	232	303	414	417	383	1273	465					69			
78															14.4		549	232	303	416	421	384	1281	467					69			
79															14.2		552	232	303	418	423	386	1287	467					69			
80															14.0		555	232	304	420	426	387	1299	469					70			
81															13.9		559	232	304	422	428	389	1306	470					70			
82															13.7		564	232	305	424	432	391	1308	470					70			
83															13.5		566	232	306	427	434	393	1303	471					70			
84															13.4		568	232	307	429	438	395	1284	470					70			
85															13.2		568	232	308	432	440	396	1273	467					70			
86															13.0		567	232	309	434	442	397	1268	467					70			
87															12.8		566	232	309	437	444	398	1271	465					70			
88															12.6		566	232	310	439	446	399	1284	466					70			
89															12.5		567	233	311	442	447	400	1285	466					70			
90															12.3		568	233	311	444	449	401	1286	466					70			
91															12.2		569	234	312	447	450	402	1295	466					70			
92															12.0		571	234	313	449	451	404	1301	467					71			
93															11.8		572	235	313	452	453	405	1303	469					71			
94															11.7		574	235	314	455	454	406	1310	469					71			
95															11.5		576	237	315	457	455	408	1310	470					71			
96															11.3		578	238	315	460	456	409	1313	470					71			
97															11.2		580	239	316	463	458	411	1321	470					71			
98															11.0		581	239	317	466	458	413	1321	469					71			
99															10.8		583	241	319	470	459	414	1328	470					71			
100															10.7		585	242	320	473	460	416	1333	470					71			
101															10.5		588	244	321	476	461	418	1331	471					71			
102															10.3		590	245	323	480	462	420	1341	471					71			
103															10.2		592	247	324	483	464	422	1349	472					71			
104															10.0		594	248	326	486	464	424	1336	471					72			

Wood Heater Test Data
Non-Sampling High Burn Data

Run: 5 Pre

Manufacturer: Kuma Stoves
Model: Aspen LE
Tracking No.: 2357
Project No.: 0123WM011E
Test Date: 04-Mar-19
Beginning Clock Time: 11:35

Total Sampling Time: 178 min
Recording Interval: 1 min
Background Sample Volume: _____ cubic feet

Meter Box Y Factor: 1.009 (1) 0.996 (2) 0.998 (Amb)

Barometric Pressure: Begin _____ Middle _____ End _____ Average 0

OMNI Equipment Numbers: _____

PM Control Modules: 371, 372
Dilution Tunnel MW(dry): 29.00 lb/lb-mole
Dilution Tunnel MW(wet): 28.78 lb/lb-mole
Dilution Tunnel H2O: 2.00 percent
Dilution Tunnel Static: _____ "H2O
Tunnel Area: 0.19635 ft2
Pitot Tube Cp: 0.99

Avg. Tunnel Velocity: #DIV/0! ft/sec.
Initial Tunnel Flow: #DIV/0! scfm
Average Tunnel Flow: #DIV/0! scfm
Post-Test Leak Check (1): _____ cfm @ _____ in. Hg
Post-Test Leak Check (2): _____ cfm @ _____ in. Hg
Average Test Piece Fuel Moisture: 21.51 Dry Basis %

Technician Signature: _____

Velocity Traverse Data										
	Pt.1	Pt.2	Pt.3	Pt.4	Pt.5	Pt.6	Pt.7	Pt.8	Center	
Initial dP										"H2O
Temp:										°F

V_{strav} _____ ft/sec V_{scent} _____ ft/sec F_p _____

	Particulate Sampling Data														Fuel Weight (lb)		Temperature Data (°F)												Stack Gas Data		
Elapsed Time (min)	Gas Meter 1 (ft^3)	Gas Meter 2 (ft^3)	Sample Rate 1 (cfm)	Sample Rate 2 (cfm)	Orifice dH 1 ("H_2O)	Meter 1 Temp (°F)	Meter 1 Vacuum ("Hg)	Orifice dH 2 ("H_2O)	Meter 2 Temp (°F)	Meter 2 Vacuum ("Hg)	Dilution Tunnel (°F)	Dilution Tunnel Center dP	Pro. Rate 1	Pro. Rate 2	Scale Reading	Weight Change	Firebox Top	Firebox Bottom	Firebox Back	Firebox Left	Firebox Right	Avg. Stove Surface	Catalyst Exit	Stack	Filter 1	Dryer Exit 1	Filter 2	Dryer Exit 2	Ambient	Draft ("H_2O)	CO_2 (%)	CO (%)
105															9.9		594	250	328	490	465	425	1309	470					72			
106															9.7		593	252	329	493	465	427	1287	468					72			
107															9.5		591	254	331	497	465	428	1274	467					72			
108															9.4		589	256	332	500	466	429	1291	465					72			
109															9.3		588	258	334	504	466	430	1300	466					72			
110															9.1		587	260	335	507	466	431	1282	465					72			
111															9.0		584	262	337	510	466	432	1251	464					72			
112															8.9		580	264	338	513	467	433	1233	460					72			
113															8.7		576	267	340	517	467	433	1223	457					72			
114															8.6		571	269	342	520	467	434	1217	455					72			
115															8.5		567	271	343	523	467	434	1211	452					72			
116															8.3		563	273	345	526	468	435	1197	449					72			
117															8.2		559	275	347	529	468	435	1195	447					72			
118															8.1		555	277	348	531	469	436	1197	447					73			
119															8.0		552	278	350	534	469	437	1204	447					73			
120															7.8		550	281	352	536	469	437	1214	446					73			
121															7.7		549	283	353	538	469	439	1220	447					73			
122															7.6		547	285	355	541	470	439	1205	444					73			
123															7.5		546	287	356	543	470	440	1185	442					73			
124															7.4		544	289	358	545	469	441	1176	441					73			
125															7.2		542	291	360	548	470	442	1181	441					73			
126															7.1		541	292	361	550	470	443	1176	440					73			
127															7.0		541	294	363	552	469	444	1176	440					73			
128															6.9		539	296	365	554	469	445	1172	440					73			
129															6.8		539	298	367	556	469	446	1159	439					73			
130															6.7		538	300	369	558	468	447	1152	438					73			
131															6.6		537	302	371	559	468	447	1146	439					73			
132															6.5		535	304	373	561	468	448	1139	437					74			
133															6.4		534	306	375	562	468	449	1149	436					74			
134															6.3		533	307	377	563	468	450	1137	435					74			
135															6.2		532	309	379	564	468	450	1130	435					74			
136															6.1		532	311	380	566	467	451	1146	436					74			
137															6.0		530	312	382	566	467	452	1122	433					74			
138															5.9		529	314	384	567	467	452	1095	432					74			
139															5.8		526	316	385	568	467	452	1079	431					74			

Wood Heater Test Data
Non-Sampling High Burn Data

Run: 5 Pre

Manufacturer: Kuma Stoves
Model: Aspen LE
Tracking No.: 2357
Project No.: 0123WM011E
Test Date: 04-Mar-19
Beginning Clock Time: 11:35

Total Sampling Time: 178 min
Recording Interval: 1 min
Background Sample Volume: _____ cubic feet

Meter Box Y Factor: 1.009 (1) 0.996 (2) 0.998 (Amb)

Barometric Pressure: Begin _____ Middle _____ End _____ Average 0

OMNI Equipment Numbers: _____

PM Control Modules: 371, 372
Dilution Tunnel MW(dry): 29.00 lb/lb-mole
Dilution Tunnel MW(wet): 28.78 lb/lb-mole
Dilution Tunnel H2O: 2.00 percent
Dilution Tunnel Static: _____ "H2O
Tunnel Area: 0.19635 ft2
Pitot Tube Cp: 0.99

Avg. Tunnel Velocity: #DIV/0! ft/sec.
Initial Tunnel Flow: #DIV/0! scfm
Average Tunnel Flow: #DIV/0! scfm
Post-Test Leak Check (1): _____ cfm @ _____ in. Hg
Post-Test Leak Check (2): _____ cfm @ _____ in. Hg
Average Test Piece Fuel Moisture: 21.51 Dry Basis %

Technician Signature: _____

Velocity Traverse Data

	Pt.1	Pt.2	Pt.3	Pt.4	Pt.5	Pt.6	Pt.7	Pt.8	Center	
Initial dP										"H2O
Temp:										°F

V_{strav} _____ ft/sec V_{scent} _____ ft/sec F_p _____

	Particulate Sampling Data														Fuel Weight (lb)		Temperature Data (°F)													Stack Gas Data		
Elapsed Time (min)	Gas Meter 1 (ft^3)	Gas Meter 2 (ft^3)	Sample Rate 1 (cfm)	Sample Rate 2 (cfm)	Orifice dH 1 ("H_2O)	Meter 1 Temp (°F)	Meter 1 Vacuum ("Hg)	Orifice dH 2 ("H_2O)	Meter 2 Temp (°F)	Meter 2 Vacuum ("Hg)	Dilution Tunnel (°F)	Dilution Tunnel Center dP	Pro. Rate 1	Pro. Rate 2	Scale Reading	Weight Change	Firebox Top	Firebox Bottom	Firebox Back	Firebox Left	Firebox Right	Avg. Stove Surface	Catalyst Exit	Stack	Filter 1	Dryer Exit 1	Filter 2	Dryer Exit 2	Ambient	Draft ("H_2O)	CO_2 (%)	CO (%)
140															5.7		524	317	386	569	467	453	1083	429					74			
141															5.6		521	319	388	569	467	453	1087	427					74			
142															5.6		519	321	389	569	467	453	1086	427					74			
143															5.5		516	323	390	569	467	453	1064	425					74			
144															5.4		513	325	391	569	467	453	1047	423					74			
145															5.3		510	328	392	569	467	453	1051	421					74			
146															5.2		506	330	392	569	466	453	1040	420					74			
147															5.2		502	332	392	568	466	452	1026	419					75			
148															5.1		498	335	392	568	466	452	1015	418					75			
149															5.0		493	338	391	567	465	451	1036	415					75			
150															5.0		489	340	391	567	465	450	1036	414					75			
151															4.9		486	342	391	566	465	450	1023	414					75			
152															4.8		483	344	390	565	464	449	1025	413					75			
153															4.8		480	346	390	565	464	449	1017	411					75			
154															4.7		477	348	390	564	464	449	1015	410					75			
155															4.6		473	349	390	564	464	448	1016	410					75			
156															4.6		471	351	390	563	464	448	1013	410					75			
157															4.5		468	352	389	562	465	447	1009	407					75			
158															4.4		465	353	389	561	465	447	997	406					75			
159															4.4		462	355	389	560	465	446	990	405					75			
160															4.3		460	357	389	559	466	446	984	403					75			
161															4.3		458	359	389	558	466	446	979	403					76			
162															4.2		456	361	389	557	466	446	969	402					76			
163															4.2		454	362	390	557	466	446	944	402					76			
164															4.1		451	364	390	556	467	445	928	400					76			
165															4.0		448	366	390	555	466	445	912	397					76			
166															4.0		446	367	390	555	467	445	900	397					76			
167															3.9		444	370	390	554	467	445	894	398					76			
168															3.9		442	372	390	553	466	445	901	397					76			
169															3.8		440	374	391	552	466	445	895	395					76			
170															3.8		438	376	391	552	466	445	879	394					76			
171															3.7		435	378	392	551	466	444	869	393					76			
172															3.7		433	381	392	551	465	444	859	390					76			
173															3.6		429	383	392	550	465	444	855	387					76			
174															3.6		425	386	392	549	464	443	846	384					77			

Wood Heater Test Data
Non-Sampling High Burn Data

Run: 5 Pre

Manufacturer: Kuma Stoves
Model: Aspen LE
Tracking No.: 2357
Project No.: 0123WM011E
Test Date: 04-Mar-19
Beginning Clock Time: 11:35

Total Sampling Time: 178 min
Recording Interval: 1 min
Background Sample Volume: _____ cubic feet

Meter Box Y Factor: 1.009 (1) 0.996 (2) 0.998 (Amb)

Barometric Pressure: Begin _____ Middle _____ End _____ Average 0

OMNI Equipment Numbers: _____

PM Control Modules: 371, 372
Dilution Tunnel MW(dry): 29.00 lb/lb-mole
Dilution Tunnel MW(wet): 28.78 lb/lb-mole
Dilution Tunnel H2O: 2.00 percent
Dilution Tunnel Static: _____ "H2O
Tunnel Area: 0.19635 ft2
Pitot Tube Cp: 0.99

Avg. Tunnel Velocity: #DIV/0! ft/sec.
Initial Tunnel Flow: #DIV/0! scfm
Average Tunnel Flow: #DIV/0! scfm
Post-Test Leak Check (1): _____ cfm @ _____ in. Hg
Post-Test Leak Check (2): _____ cfm @ _____ in. Hg
Average Test Piece Fuel Moisture: 21.51 Dry Basis %

Technician Signature: _____

Velocity Traverse Data

	Pt.1	Pt.2	Pt.3	Pt.4	Pt.5	Pt.6	Pt.7	Pt.8	Center	
Initial dP										"H2O
Temp:										°F

V_{strav} _____ ft/sec V_{scent} _____ ft/sec F_p _____

	Particulate Sampling Data														Fuel Weight (lb)		Temperature Data (°F)													Stack Gas Data		
Elapsed Time (min)	Gas Meter 1 (ft^3)	Gas Meter 2 (ft^3)	Sample Rate 1 (cfm)	Sample Rate 2 (cfm)	Orifice dH 1 ("H_2O)	Meter 1 Temp (°F)	Meter 1 Vacuum ("Hg)	Orifice dH 2 ("H_2O)	Meter 2 Temp (°F)	Meter 2 Vacuum ("Hg)	Dilution Tunnel (°F)	Dilution Tunnel Center dP	Pro. Rate 1	Pro. Rate 2	Scale Reading	Weight Change	Firebox Top	Firebox Bottom	Firebox Back	Firebox Left	Firebox Right	Avg. Stove Surface	Catalyst Exit	Stack	Filter 1	Dryer Exit 1	Filter 2	Dryer Exit 2	Ambient	Draft ("H_2O)	CO_2 (%)	CO (%)
175															3.6		421	388	392	548	464	443	838	382					77			
176															3.5		418	390	392	548	463	442	826	380					77			
177															3.5		414	393	392	547	463	442	806	378					77			
178															3.5		409	395	392	546	462	441	790	376					77			
Avg/Tot	0.000	0.000	#DIV/0!	#DIV/0!	#DIV/0!	#DIV/0!		#DIV/0!	#DIV/0!		#DIV/0!	#DIV/0!	#DIV/0!	#DIV/0!								384.4				#DIV/0!	#DIV/0!	#DIV/0!	70	#DIV/0!		

Wood Heater Test Results

Manufacturer: Kuma Stoves
Model: Aspen LE
Project No.: 0123WM011E
Tracking No.: 2357
Run: 5 Pre
Test Date: 03/04/19

Burn Rate	**2.66 kg/hr dry**
Average Tunnel Temperature	
Average Gas Velocity in Dilution Tunnel - vs	
Average Gas Flow Rate in Dilution Tunnel - Qsd	
Average Delta p	
Total Time of Test	124 minutes

Technician Signature:_____

Adjunct to ASTM E XXXX Wood Heater Cordwood Test Method - May 10, 2017 Version

Cordwood Fuel Load Calculators - 10 lb/ft^3 Nominal Load Density

Core 45-65% of Total Load Weight, Remainder 35-55% of Total Load Weight

Values to be input manually

THIS DOCUMENT IS NOT AN ASTM STANDARD; IT IS UNDER CONSIDERATION WITHIN AN ASTM TECHNICAL COMMITTEE BUT HAS NOT RECEIVED ALL APPROVALS REQUIRED TO BECOME AN ASTM STANDARD. IT SHALL NOT BE REPRODUCED OR CIRCULATED OR QUOTED, IN WHOLE OR IN PART, OUTSIDE OF ASTM COMMITTEE ACTIVITIES EXCEPT WITH THE APPROVAL OF THE CHAIRMAN OF THE COMMITTEE HAVING JURISDICTION AND THE PRESIDENT OF THE SOCIETY. *COPYRIGHT ASTM, 100 BARR HARBOR DRIVE, WEST CONSHOHOCKEN, PA 19428. ALL RIGHTS RESERVED.*

For All Usable Firebox Volumes - High Fire Test Only

Nominal Required Load Density (wet basis)	10	lb/ft^3				
Usable Firebox Volume	1.74	ft^3				
Total Nom. Load Wt. Target	17.36	lb				
Total Load Wt. Allowable Range	16.49	to	18.20	lb		
Core Target Wt. Allowable Range	7.80	to	11.30	lb		
Remainder Load Wt. Allowable Range	6.10	to	9.50	lb		
						Mid-Point
Core Load Pc. Wt. Allowable Range	2.60	to	4.30	lb		3.45
Remainder Load Pc. Wt. Allowable Range	1.70	to	9.50	lb		5.60
	Pc. #					
Core Load Piece Wt. Actual	1	3.80	lb	In Range		
	2	3.05	lb	In Range		
	3	3.09	lb	In Range		
Core Load Total. Wt. Actual		9.95	lb	In Range		
	Pc. #					
Remainder Load Piece Wt.	1	2.21	lb	In Range		
(1 to 3 Pcs.)	2	4.37	lb	In Range		
	3		lb	NA		
Remainder Load Tot. Wt. Act		6.59	lb	In Range		
Total Load Wt. Actual		16.53	lb	In Range		
Core % of Total Wt.		60%		In Range	45-65%	
Remainder % of Total Wt.		40%		In Range	35-55%	
Actual Load % of Nominal Target		95%		In Range	95-105%	
Actual Fuel Load Density		9.5	lb/ft^3			
Kindling and Start-up Fuel						
Maximim Kindling Wt. (20% of Tot. Load Wt.)		3.31	lb			
Actual Kindling Wt.		3.31	lb	In Range	20.0%	
Maximum Start-up Fuel Wt. (30% of Tot. Load Wt.)		4.96	lb			
Actual Start-up Fuel Wt.		4.30	lb	In Range	26.0%	
Allowable Residual Start-up Fuel Wt. Range	1.7	to	3.3	lb		Mid-Point
Actual Residual Start-up Fuel Wt.		2	lb	In Range		2.5
Total Wt. All Fuel Added (wet basis)		24.14	lb			
High Fire Test Run End Point Range	Low		High			Mid-Point
Based on Fuel Load Wt. (w/tares)	1.5	to	1.8	lb		1.7
Actual Fuel Load Ending Wt.		1.5	lb	In Range		

Fuel Piece Moisture Reading (%-dry basis)

1	2	3	Ave.		Pc. Wt. Dry Basis			
20.3	20.5	26.9	22.6	In Range	3.10	lb	1.41	kg
23.9	22.2	19	21.7	In Range	2.51	lb	1.14	kg
24.3	21.7	22.1	22.7	In Range	2.52	lb	1.14	kg
20.9	18.4	23.1	20.8	In Range	1.83	lb	0.83	kg
18.4	18.1	22.8	19.8	In Range	3.65	lb	1.66	kg
			NA	NA	NA	lb	NA	kg

Total Load Ave. MC (%-dry basis)	21.4	In Range			
Total Load Ave. MC % (wet basis)	17.7				
Total Test Load Weight (dry basis) →			13.61	lb	6.18 kg
Kindling Moisture (%-dry basis)					
8.3 / 10.6 / 7.8	8.9	In Range	3.04	lb	1.38 kg
Start-up Fuel Moisture Readings (%-dry basis)					
20.3 / 21.9 / 21.8	21.3	In Range	3.54	lb	1.61 kg
Total Wt. All Fuel Added (dry basis) →			20.19	lb	9.16 kg
Total Wt. All Fuel Burned (dry basis) →			16.7	lb	7.6 kg

Run 5

Medium Burn

ASTM E3053 / ASTM E2515 Emissions Results

Manufacturer:	Kuma
Model:	Aspen LE
Project No.:	0123WM011E
Tracking No.:	2357
Run:	5
Test Date:	03/04/19

Technician Signature: 

Test Results	
Particulate Emission Rate	**0.39 g/hr**
Total Particulate Emissions - E_T	4.11 g
Emissisons Factor	0.56 g/kg
CSA B415 Efficiency	**82.2% HHV**

First Hour Emissions	
Particulate Emission Rate	1.19 g/hr
Total Particulate Emissions - E_T	1.19 g
Emissisons Factor	0.63 g/kg

Burn Rate (Test Load)	**0.70 kg/hr dry**
Average Tunnel Temperature	82 degrees F
Avg.Velocity in Dilution Tunnel - v_s	17.33 ft/second
Avg.Flow Rate in Dilution Tunnel - Q_{sd}	11159.8 dscf/hour
Average Δp	0.069 inches H20
Average ΔH	1.41 inches H20
Total Time of Test	637 minutes

ASTM E3053 / ASTM E2515 Emissions Results

Manufacturer: Kuma
Model: Aspen LE
Project No.: 0123WM011E
Tracking No.: 2357
Run: 5
Test Date: 03/04/19

Technician Signature:

	1st Hour	Sample Train 1	Sample Train 2	Sample	Unit
Total Sample Volume - V_m	7.825	83.025	86.527	185.631	ft^3
Average Gas Meter Temperature	72.48	71.32	71.41	67	°F
Sample Volume (Std. Conditions) - V_{mstd}	7.500	79.749	81.958	177.195	dsf^3
Total Particulates - m_n	0.8	2.8	2.9	0.1	mg
Particulate Concentration - C_r/C_s	1.067E-04	3.51E-05	3.54E-05	5.64E-07	g/dsf^3
Total Particulate Emissions - E_T	1.19	4.09	4.13	0.07	g
Particulate Emission Rate	1.19	0.39	0.39	0.01	g/hr
Emissisons Factor	0.63	0.55	0.56		g/kg
Delta from Avg. Particulate Emissions		0.02	0.02		g

Quality Checks

Filter Temps 80 - 90 °F	OK	Ambient Temp (55-90°F)	OK
Filter Face Velocity	OK	Negative Probe Weight	OK
Leakage Rate	OK	Pro-Rate Variation	CHECK 10 MIN.
		Dual Train Comparison	OK

CSA B415.1 Results - Test Load

Manufacturer:	Kuma	**Control #:**	0123WM011E
Model:	Aspen LE	**Test Duration:**	637
Date:	03/04/19	**Output Category:**	Med
Run:	5		

Test Results in Accordance with CSA B415.1-09

	HHV Basis	LHV Basis
Overall Efficiency	82.2%	88.8%
Combustion Efficiency	99.5%	99.5%
Heat Transfer Efficiency	83%	89.3%

	kJ/h	BTU/h
Output Rate	11,350	10,767
Input Rate	13,808	13,098

	kg/h	lb/h
Burn Rate	0.70	1.54

	dry kg	dry lb
Test Load Weight	7.40	16.31

MC wet (%)	17.59
MC dry (%)	21.34
Particulate (g)	4.11
CO (g)	83
Test Duration (h)	10.62

	g/MJ Output	g/kg Dry Fuel	g/h	lb/MM Btu Output
Particulate Emissions	0.03	0.56	0.39	0.08
CO Emissions	0.69	11.18	7.79	1.60
Air/Fuel Ratio (A/F)	14.34			

~~**VERSION**~~ ~~**2.2**~~ ~~**12/14/2009**~~ *Modified to fit this Format*

Wood Heater Test Data - ASTM E3053 / ASTM E2515

Run: 5

Manufacturer: Kuma
Model: Aspen LE
Tracking No.: 2357
Project No.: 0123WM011E
Test Date: 04-Mar-19
Beginning Clock Time: 15:40

Total Sampling Time: 637 min
Recording Interval: 1 min
Background Sample Volume: 185.631 cubic feet

Meter Box Y Factor: 1.009 (1) 0.996 (2) 0.998 (Amb)

Barometric Pressure:

Begin	Middle	End	Avg
28.56	28.57	28.58	28.57 "Hg

PM Control Modules: 371/372
Dilution Tunnel MW(dry): 29.00 lb/lb-mole
Dilution Tunnel MW(wet): 28.78 lb/lb-mole
Dilution Tunnel H2O: 2.00 percent
Dilution Tunnel Static: -0.140 "H_2O
Tunnel Area: 0.1963 ft^2
Pitot Tube Cp: 0.99

Avg. Tunnel Velocity: 17.33 ft/sec.
Intial Tunnel Flow: 181.0 scfm
Average Tunnel Flow: 186.0 scfm
Post-Test Leak Check (1): 0.000 cfm @ -5 in. Hg
Post-Test Leak Check (2): 0.000 cfm @ -7 in. Hg

Velocity Traverse Data

	Pt.1	Pt.2	Pt.3	Pt.4	Pt.5	Pt.6	Pt.7	Pt.8	Center	
Initial dP	0.062	0.072	0.062	0.060	0.058	0.070	0.064	0.062	0.069	"H2O
Temp:	114	114	114	114	113	113	113	113	113	°F

V_{strav} 17.84 ft/sec V_{scent} 18.57 ft/sec F_p 0.961

Run:	5	Particulate Sampling Data													Fuel Weight (lb)		Temperature Data (°F)							Stack Gas Data		
Elapsed Time (min)	Gas Meter 1 (ft^3)	Gas Meter 2 (ft^3)	Sample Rate 1 (cfm)	Sample Rate 2 (cfm)	Orifice dH 1 ("H_2O)	Meter Temp 1 (°F)	Meter Vacuum 1 ("Hg)	Orifice dH 2 ("H_2O)	Meter Temp 2 (°F)	Meter Vacuum 2 ("Hg)	Dilution Tunnel (°F)	Tunnel Center dP	Pro. Rate 1	Pro. Rate 2	Scale Reading	Weight Change	Stack	Filter 1	Dryer 1	Filter 2	Dryer 2	Ambient	Avg. Surface	Draft ("H_2O)	CO_2 (%)	CO (%)
0	0.000	0.000			0.79	75	0.26	1.28	75	-0.40	99	0.066			19.8		193	88	58	84	58	74	382	-0.060	6.15	0.040
1	0.094	0.117	0.09	0.12	1.14	75	-0.65	1.00	75	-1.00	128	0.069	74	89	19.3	-0.5	272	88	57	84	57	74	381	-0.060	3.98	0.280
2	0.211	0.247	0.12	0.13	1.16	75	-0.22	0.98	75	-1.00	107	0.065	94	100	19.2	-0.1	247	88	57	84	56	73	378	-0.060	1.72	0.390
3	0.329	0.376	0.12	0.13	1.14	75	-0.57	0.98	75	-1.00	108	0.059	99	104	19.1	-0.1	276	88	57	84	57	73	376	-0.060	5.26	0.420
4	0.448	0.507	0.12	0.13	1.24	75	-0.70	1.07	75	-1.10	110	0.065	96	101	18.9	-0.1	316	88	57	84	57	74	376	-0.060	8.17	0.050
5	0.569	0.641	0.12	0.13	1.23	75	-0.70	1.05	75	-1.20	110	0.065	97	103	18.8	-0.1	341	88	57	84	57	73	375	-0.060	8.90	0.040
6	0.690	0.777	0.12	0.14	1.22	75	-0.60	1.20	75	-1.60	111	0.066	97	104	18.7	-0.1	359	88	57	85	57	74	375	-0.060	9.43	0.040
7	0.810	0.920	0.12	0.14	1.15	75	-0.59	1.20	75	-1.40	111	0.065	97	110	18.6	-0.1	373	87	57	85	57	74	376	-0.060	9.32	0.040
8	0.941	1.063	0.13	0.14	1.44	75	-0.94	1.19	75	-1.60	113	0.065	106	111	18.5	-0.1	381	86	57	85	57	74	376	-0.060	9.56	0.040
9	1.073	1.205	0.13	0.14	1.42	75	-0.78	1.12	75	-1.30	114	0.066	106	109	18.4	-0.1	390	86	57	85	57	74	376	-0.060	8.92	0.050
10	1.204	1.342	0.13	0.14	1.43	75	-0.62	1.10	75	-1.30	115	0.066	105	105	18.3	-0.1	395	85	57	85	57	74	377	-0.070	8.85	0.050
11	1.334	1.480	0.13	0.14	1.41	75	-0.60	1.10	75	-1.50	115	0.066	104	106	18.1	-0.1	401	85	57	85	57	73	377	-0.070	9.45	0.050
12	1.465	1.616	0.13	0.14	1.41	75	-0.73	1.09	75	-1.50	116	0.064	107	106	18.0	-0.1	406	85	57	86	57	73	377	-0.070	9.62	0.050
13	1.595	1.754	0.13	0.14	1.40	75	-0.98	1.09	75	-1.50	117	0.066	104	106	17.9	-0.1	412	84	57	86	57	73	378	-0.070	9.67	0.050
14	1.725	1.890	0.13	0.14	1.39	75	-0.56	1.08	75	-1.30	118	0.065	105	106	17.7	-0.1	418	84	57	86	57	73	378	-0.070	10.02	0.050
15	1.855	2.026	0.13	0.14	1.37	75	-0.79	1.08	75	-1.50	118	0.065	105	106	17.7	-0.1	424	84	57	86	57	74	378	-0.070	10.71	0.040
16	1.984	2.162	0.13	0.14	1.40	75	-0.91	1.09	75	-1.30	109	0.066	103	104	17.6	0.0	352	84	57	86	57	73	381	-0.060	13.64	0.330
17	2.113	2.299	0.13	0.14	1.39	76	-0.93	1.08	75	-1.30	107	0.067	102	104	17.6	-0.1	320	84	57	86	57	74	383	-0.060	9.68	0.030
18	2.243	2.435	0.13	0.14	1.37	76	-0.59	1.08	75	-1.30	107	0.065	104	105	17.5	-0.1	302	84	57	86	57	74	383	-0.060	7.15	0.010
19	2.372	2.571	0.13	0.14	1.39	76	-0.82	1.08	75	-1.40	105	0.066	102	104	17.5	-0.1	289	84	57	86	57	73	382	-0.050	6.25	0.010
20	2.501	2.707	0.13	0.14	1.38	76	-0.97	1.08	75	-1.40	105	0.066	102	104	17.4	0.0	281	84	57	86	58	73	380	-0.050	5.91	0.010
21	2.630	2.843	0.13	0.14	1.38	76	-0.97	1.08	76	-1.50	103	0.064	104	105	17.4	-0.1	273	84	57	86	58	73	378	-0.050	5.81	0.010
22	2.760	2.979	0.13	0.14	1.36	76	-0.53	1.07	76	-1.20	103	0.066	103	103	17.3	0.0	267	84	58	86	58	74	376	-0.050	5.80	0.010
23	2.889	3.116	0.13	0.14	1.38	76	-0.54	1.06	76	-1.40	103	0.065	103	105	17.3	0.0	261	84	58	86	58	73	374	-0.050	5.80	0.010
24	3.017	3.251	0.13	0.14	1.38	76	-0.93	1.07	76	-1.50	103	0.066	101	103	17.3	0.0	258	83	58	86	58	73	372	-0.050	5.79	0.010
25	3.151	3.389	0.13	0.14	1.46	76	-0.84	1.11	76	-1.50	102	0.066	106	105	17.2	0.0	255	83	58	86	58	73	369	-0.050	5.82	0.010
26	3.285	3.527	0.13	0.14	1.48	76	-0.84	1.11	76	-1.50	102	0.065	107	106	17.2	0.0	252	83	58	86	58	74	366	-0.050	5.89	0.020
27	3.419	3.666	0.13	0.14	1.46	76	-0.59	1.10	76	-1.50	101	0.067	105	105	17.1	0.0	250	83	58	85	58	74	364	-0.050	5.93	0.020
28	3.552	3.804	0.13	0.14	1.47	76	-0.58	1.11	76	-1.50	101	0.065	106	105	17.1	-0.1	248	84	58	84	58	74	361	-0.050	5.95	0.020
29	3.685	3.943	0.13	0.14	1.46	76	-0.95	1.12	76	-1.50	101	0.067	104	105	17.1	0.0	246	84	58	83	58	74	359	-0.050	5.97	0.020
30	3.819	4.081	0.13	0.14	1.48	76	-0.98	1.11	76	-1.40	100	0.066	106	105	17.0	-0.1	245	84	58	82	58	74	356	-0.050	5.96	0.020
31	3.953	4.219	0.13	0.14	1.46	76	-1.00	1.12	76	-1.30	100	0.067	105	104	17.0	0.0	242	83	58	82	58	74	353	-0.050	5.94	0.020
32	4.087	4.358	0.13	0.14	1.47	76	-1.04	1.11	76	-1.30	100	0.066	106	105	16.9	-0.1	239	83	58	82	58	74	350	-0.040	6.00	0.020
33	4.220	4.495	0.13	0.14	1.46	76	-0.80	1.08	76	-1.30	100	0.066	105	104	16.9	0.0	237	83	58	82	58	74	347	-0.040	6.12	0.020
34	4.353	4.632	0.13	0.14	1.47	76	-0.82	1.09	76	-1.20	99	0.068	103	102	16.8	-0.1	235	83	58	82	58	73	344	-0.040	6.23	0.020
35	4.486	4.768	0.13	0.14	1.46	76	-0.58	1.09	76	-1.30	99	0.066	105	103	16.8	0.0	233	83	58	82	58	74	341	-0.040	6.42	0.020
36	4.620	4.904	0.13	0.14	1.45	76	-0.65	1.08	76	-1.20	99	0.067	105	102	16.7	-0.1	231	83	58	82	58	74	338	-0.040	6.66	0.020
37	4.753	5.041	0.13	0.14	1.47	76	-0.80	1.08	76	-1.50	98	0.068	103	102	16.7	0.0	231	83	58	82	58	75	336	-0.040	6.85	0.020
38	4.887	5.177	0.13	0.14	1.45	76	-1.05	1.08	76	-1.40	99	0.066	106	103	16.6	-0.1	230	83	58	82	58	75	333	-0.040	6.87	0.020
39	5.020	5.314	0.13	0.14	1.47	76	-0.77	1.08	76	-1.30	98	0.066	105	104	16.6	0.0	229	83	58	82	58	75	331	-0.040	6.92	0.020
40	5.153	5.450	0.13	0.14	1.45	76	-0.96	1.08	76	-1.30	98	0.068	103	101	16.5	-0.1	229	83	58	82	58	75	329	-0.040	7.00	0.020
41	5.287	5.587	0.13	0.14	1.47	76	-0.57	1.08	76	-1.20	98	0.067	105	103	16.5	0.0	228	83	58	82	58	74	327	-0.040	7.04	0.020

Run:	5	Particulate Sampling Data													Fuel Weight (lb)		Temperature Data (°F)							Stack Gas Data		
Elapsed Time (min)	Gas Meter 1 (ft^3)	Gas Meter 2 (ft^3)	Sample Rate 1 (cfm)	Sample Rate 2 (cfm)	Orifice dH 1 ("H_2O)	Meter Temp 1 (°F)	Meter Vacuum 1 ("Hg)	Orifice dH 2 ("H_2O)	Meter Temp 2 (°F)	Meter Vacuum 2 ("Hg)	Dilution Tunnel (°F)	Tunnel Center dP	Pro. Rate 1	Pro. Rate 2	Scale Reading	Weight Change	Stack	Filter 1	Dryer 1	Filter 2	Dryer 2	Ambient	Avg. Surface	Draft ("H_2O)	CO_2 (%)	CO (%)
42	5.420	5.724	0.13	0.14	1.46	76	-0.99	1.09	76	-1.30	98	0.067	104	103	16.4	-0.1	228	83	58	82	58	73	325	-0.040	7.10	0.020
43	5.554	5.860	0.13	0.14	1.47	76	-1.06	1.08	76	-1.50	97	0.067	105	102	16.4	0.0	227	83	58	82	58	75	323	-0.040	7.16	0.020
44	5.687	5.997	0.13	0.14	1.46	76	-0.95	1.08	76	-1.30	98	0.067	104	103	16.4	0.0	226	83	58	82	58	74	321	-0.040	7.22	0.020
45	5.821	6.133	0.13	0.14	1.47	76	-0.85	1.08	76	-1.40	97	0.066	105	103	16.3	0.0	226	83	58	82	58	75	320	-0.040	7.28	0.020
46	5.953	6.270	0.13	0.14	1.46	77	-1.05	1.08	76	-1.50	97	0.067	103	103	16.3	-0.1	226	83	58	82	58	74	318	-0.040	7.32	0.020
47	6.087	6.406	0.13	0.14	1.45	77	-0.60	1.08	76	-1.50	97	0.065	106	104	16.2	0.0	225	82	58	81	58	74	316	-0.040	7.38	0.030
48	6.220	6.542	0.13	0.14	1.46	77	-1.00	1.08	76	-1.30	97	0.067	104	102	16.2	0.0	225	82	58	81	58	74	315	-0.040	7.45	0.030
49	6.354	6.679	0.13	0.14	1.45	77	-0.88	1.08	76	-1.20	96	0.067	104	103	16.1	0.0	225	82	58	81	58	74	313	-0.040	7.54	0.030
50	6.487	6.816	0.13	0.14	1.47	77	-0.72	1.08	76	-1.50	96	0.066	104	103	16.1	-0.1	224	82	58	81	58	74	312	-0.040	7.58	0.030
51	6.620	6.952	0.13	0.14	1.46	77	-1.05	1.08	76	-1.40	96	0.066	104	103	16.0	0.0	224	82	58	81	58	74	311	-0.040	7.63	0.030
52	6.754	7.088	0.13	0.14	1.46	77	-0.99	1.09	76	-1.50	96	0.067	104	102	16.0	-0.1	224	82	58	81	58	74	309	-0.040	7.68	0.030
53	6.886	7.225	0.13	0.14	1.46	77	-0.99	1.08	76	-1.30	96	0.067	103	103	15.9	0.0	223	82	58	81	58	74	308	-0.040	7.70	0.030
54	7.020	7.362	0.13	0.14	1.47	77	-0.96	1.08	76	-1.30	96	0.068	104	102	15.9	-0.1	224	82	59	80	58	75	307	-0.040	7.70	0.030
55	7.153	7.498	0.13	0.14	1.46	77	-0.62	1.09	76	-1.20	95	0.067	104	102	15.9	0.0	223	82	59	80	58	74	305	-0.040	7.76	0.030
56	7.287	7.635	0.13	0.14	1.47	77	-0.59	1.08	77	-1.50	95	0.068	104	102	15.8	-0.1	222	81	59	80	58	74	304	-0.040	7.79	0.030
57	7.421	7.771	0.13	0.14	1.49	77	-0.68	1.08	77	-1.40	95	0.068	104	101	15.8	0.0	222	81	59	80	58	74	303	-0.040	7.84	0.030
58	7.556	7.908	0.14	0.14	1.48	77	-1.07	1.08	77	-1.30	95	0.067	105	102	15.7	0.0	222	81	59	80	58	74	302	-0.040	7.90	0.030
59	7.690	8.044	0.13	0.14	1.50	77	-0.61	1.09	77	-1.30	95	0.067	104	102	15.7	0.0	222	81	59	80	58	74	302	-0.040	7.97	0.030
60	7.825	8.181	0.14	0.14	1.50	77	-0.89	1.08	77	-1.20	94	0.067	105	102	15.6	0.0	222	81	59	80	58	74	301	-0.040	8.04	0.030
61	7.962	8.318	0.14	0.14	1.58	77	-0.63	1.08	77	-1.20	94	0.068	106	101	15.6	0.0	222	81	59	80	58	74	300	-0.040	8.09	0.030
62	8.092	8.455	0.13	0.14	1.38	77	-0.45	1.08	77	-1.40	94	0.069	100	101	15.5	-0.1	222	81	59	80	58	73	299	-0.040	8.15	0.030
63	8.223	8.592	0.13	0.14	1.39	77	-0.63	1.07	77	-1.40	94	0.068	101	101	15.5	0.0	222	81	59	80	58	74	298	-0.040	8.20	0.030
64	8.352	8.728	0.13	0.14	1.41	77	-0.44	1.08	77	-1.20	94	0.068	100	101	15.4	0.0	222	81	59	80	58	74	298	-0.040	8.28	0.030
65	8.483	8.865	0.13	0.14	1.38	77	-0.45	1.08	77	-1.40	94	0.067	102	102	15.4	-0.1	222	81	59	80	58	74	297	-0.040	8.38	0.030
66	8.614	9.001	0.13	0.14	1.41	77	-0.84	1.08	77	-1.40	94	0.069	100	100	15.3	-0.1	222	81	59	80	58	73	296	-0.040	8.39	0.030
67	8.743	9.138	0.13	0.14	1.40	77	-0.61	1.08	77	-1.20	94	0.067	100	102	15.3	-0.1	223	80	59	80	58	74	296	-0.040	8.44	0.040
68	8.874	9.275	0.13	0.14	1.39	77	-0.69	1.08	77	-1.20	94	0.067	102	102	15.2	0.0	224	80	59	80	58	73	295	-0.040	8.55	0.040
69	9.005	9.411	0.13	0.14	1.39	77	-0.92	1.08	77	-1.50	94	0.068	101	101	15.2	0.0	225	80	59	80	58	73	295	-0.040	8.65	0.040
70	9.134	9.548	0.13	0.14	1.41	77	-0.52	1.08	77	-1.40	94	0.068	100	101	15.1	-0.1	225	80	59	80	58	73	295	-0.040	8.72	0.040
71	9.265	9.685	0.13	0.14	1.39	77	-0.83	1.07	77	-1.50	94	0.068	101	101	15.1	-0.1	226	80	59	80	58	72	294	-0.040	8.84	0.040
72	9.396	9.822	0.13	0.14	1.40	77	-0.91	1.08	77	-1.20	94	0.068	101	101	15.0	0.0	227	80	59	80	58	72	294	-0.040	8.87	0.040
73	9.526	9.958	0.13	0.14	1.40	77	-0.48	1.08	77	-1.40	94	0.069	100	100	15.0	-0.1	228	80	59	80	58	73	294	-0.040	8.82	0.040
74	9.656	10.095	0.13	0.14	1.39	77	-0.82	1.08	77	-1.50	93	0.069	100	101	14.9	-0.1	229	80	59	80	58	72	294	-0.040	8.83	0.040
75	9.787	10.232	0.13	0.14	1.40	77	-0.46	1.09	77	-1.40	93	0.068	101	101	14.9	0.0	228	80	59	80	58	72	293	-0.040	8.88	0.040
76	9.916	10.369	0.13	0.14	1.40	77	-0.48	1.09	77	-1.50	93	0.068	99	101	14.8	-0.1	229	80	59	80	58	72	293	-0.040	8.97	0.040
77	10.047	10.505	0.13	0.14	1.40	77	-0.52	1.08	77	-1.40	93	0.068	101	101	14.8	0.0	229	80	59	80	58	71	293	-0.040	9.12	0.040
78	10.178	10.642	0.13	0.14	1.41	77	-0.66	1.08	77	-1.50	93	0.068	101	101	14.7	-0.1	230	80	59	80	58	72	293	-0.040	9.31	0.040
79	10.308	10.779	0.13	0.14	1.40	77	-0.91	1.08	77	-1.50	93	0.068	100	101	14.6	-0.1	231	80	59	80	58	73	293	-0.040	9.58	0.040
80	10.438	10.914	0.13	0.14	1.39	77	-0.64	1.08	77	-1.50	93	0.068	100	100	14.6	0.0	232	80	59	80	58	73	293	-0.050	9.76	0.050
81	10.568	11.051	0.13	0.14	1.40	77	-0.50	1.08	76	-1.40	93	0.068	100	102	14.5	-0.1	233	80	59	80	58	73	294	-0.040	9.99	0.040
82	10.698	11.187	0.13	0.14	1.40	77	-0.53	1.08	77	-1.40	92	0.068	100	101	14.5	0.0	233	80	59	80	58	73	293	-0.040	10.66	0.040
83	10.829	11.324	0.13	0.14	1.39	77	-0.72	1.08	76	-1.40	92	0.068	101	102	14.4	0.0	234	80	59	80	58	72	293	-0.050	11.60	0.030
84	10.959	11.460	0.13	0.14	1.39	77	-0.76	1.07	76	-1.40	92	0.067	101	102	14.4	-0.1	231	81	59	81	58	71	294	-0.050	11.27	0.030
85	11.089	11.596	0.13	0.14	1.40	77	-0.51	1.07	76	-1.40	92	0.067	101	102	14.3	-0.1	233	81	59	82	58	71	295	-0.050	10.28	0.050
86	11.219	11.733	0.13	0.14	1.40	77	-0.92	1.08	76	-1.20	92	0.067	101	102	14.3	0.0	234	82	59	83	58	71	296	-0.050	9.59	0.050
87	11.350	11.869	0.13	0.14	1.40	77	-0.59	1.08	76	-1.30	92	0.069	100	100	14.2	-0.1	234	82	59	84	58	72	296	-0.050	9.20	0.050
88	11.480	12.006	0.13	0.14	1.41	77	-0.57	1.07	76	-1.50	91	0.068	100	101	14.1	-0.1	234	83	59	85	58	72	296	-0.050	9.09	0.050
89	11.610	12.142	0.13	0.14	1.39	77	-0.88	1.08	76	-1.20	92	0.068	100	101	14.1	-0.1	234	83	59	85	58	71	296	-0.050	9.10	0.040
90	11.741	12.278	0.13	0.14	1.40	77	-0.77	1.08	76	-1.30	92	0.068	101	101	14.1	0.0	233	84	59	85	58	71	296	-0.050	9.18	0.050
91	11.870	12.415	0.13	0.14	1.41	77	-0.49	1.08	76	-1.20	92	0.068	99	102	14.0	-0.1	233	84	59	85	58	71	296	-0.050	9.25	0.050
92	12.000	12.551	0.13	0.14	1.39	77	-0.51	1.08	76	-1.20	92	0.068	100	101	13.9	-0.1	233	84	59	85	58	71	296	-0.050	9.32	0.050
93	12.131	12.688	0.13	0.14	1.38	76	-0.94	1.08	76	-1.40	91	0.068	101	101	13.9	0.0	232	83	59	85	58	70	296	-0.050	9.31	0.050
94	12.261	12.824	0.13	0.14	1.38	77	-0.94	1.09	76	-1.20	91	0.068	100	101	13.8	0.0	232	83	59	85	58	71	296	-0.050	9.34	0.050
95	12.391	12.960	0.13	0.14	1.40	77	-0.89	1.07	76	-1.50	91	0.068	100	101	13.8	0.0	233	83	59	84	58	71	296	-0.050	9.36	0.050

Run:	5	Particulate Sampling Data													Fuel Weight (lb)		Temperature Data (°F)							Stack Gas Data		
Elapsed Time (min)	Gas Meter 1 (ft^3)	Gas Meter 2 (ft^3)	Sample Rate 1 (cfm)	Sample Rate 2 (cfm)	Orifice dH 1 ("H_2O)	Meter Temp 1 (°F)	Meter Vacuum 1 ("Hg)	Orifice dH 2 ("H_2O)	Meter Temp 2 (°F)	Meter Vacuum 2 ("Hg)	Dilution Tunnel (°F)	Tunnel Center dP	Pro. Rate 1	Pro. Rate 2	Scale Reading	Weight Change	Stack	Filter 1	Dryer 1	Filter 2	Dryer 2	Ambient	Avg. Surface	Draft ("H_2O)	CO_2 (%)	CO (%)
96	12.522	13.097	0.13	0.14	1.38	76	-0.89	1.08	76	-1.20	91	0.069	100	101	13.8	0.0	232	83	59	84	58	72	295	-0.050	9.34	0.050
97	12.652	13.233	0.13	0.14	1.41	76	-0.94	1.08	76	-1.40	91	0.069	100	100	13.7	-0.1	232	83	59	84	58	71	295	-0.050	9.41	0.050
98	12.782	13.369	0.13	0.14	1.41	76	-0.74	1.08	76	-1.40	91	0.068	100	101	13.6	-0.1	232	82	59	84	58	71	295	-0.050	9.37	0.050
99	12.912	13.506	0.13	0.14	1.38	76	-0.60	1.08	76	-1.20	91	0.068	100	101	13.6	0.0	232	82	59	84	58	71	295	-0.050	9.39	0.050
100	13.043	13.642	0.13	0.14	1.39	76	-0.87	1.08	76	-1.20	91	0.067	102	101	13.5	-0.1	232	82	59	83	58	70	295	-0.050	9.43	0.050
101	13.172	13.779	0.13	0.14	1.40	76	-0.62	1.08	76	-1.20	91	0.069	99	101	13.5	0.0	232	82	59	83	58	71	295	-0.050	9.49	0.050
102	13.302	13.915	0.13	0.14	1.39	76	-0.66	1.08	76	-1.40	90	0.068	100	101	13.4	0.0	232	82	59	83	58	70	295	-0.050	9.51	0.050
103	13.433	14.052	0.13	0.14	1.39	76	-0.50	1.08	76	-1.20	91	0.068	101	101	13.4	0.0	232	81	59	83	58	70	295	-0.050	9.53	0.050
104	13.563	14.188	0.13	0.14	1.40	76	-0.61	1.08	76	-1.50	90	0.069	99	100	13.3	-0.1	232	81	59	83	58	70	295	-0.050	9.55	0.050
105	13.692	14.324	0.13	0.14	1.40	76	-0.60	1.08	76	-1.30	90	0.069	99	100	13.3	-0.1	232	81	59	82	58	70	295	-0.050	9.59	0.050
106	13.823	14.461	0.13	0.14	1.40	76	-0.52	1.08	76	-1.40	90	0.067	102	102	13.2	0.0	232	81	59	82	58	70	295	-0.050	9.62	0.050
107	13.953	14.597	0.13	0.14	1.40	76	-0.88	1.08	76	-1.20	90	0.069	99	100	13.2	-0.1	233	81	59	82	58	70	295	-0.050	9.60	0.050
108	14.083	14.734	0.13	0.14	1.39	76	-0.81	1.08	76	-1.20	90	0.069	99	101	13.1	0.0	233	81	59	82	58	70	295	-0.050	9.63	0.050
109	14.214	14.871	0.13	0.14	1.40	76	-0.54	1.08	76	-1.30	90	0.068	101	101	13.1	-0.1	232	81	59	82	58	70	295	-0.050	9.67	0.050
110	14.343	15.007	0.13	0.14	1.40	76	-0.44	1.08	76	-1.30	90	0.069	99	100	13.0	0.0	232	80	59	81	58	70	295	-0.050	9.72	0.050
111	14.473	15.144	0.13	0.14	1.40	76	-0.45	1.09	76	-1.30	90	0.068	100	101	13.0	0.0	232	80	59	81	58	71	296	-0.050	9.78	0.050
112	14.604	15.280	0.13	0.14	1.39	76	-0.50	1.08	76	-1.50	90	0.067	102	101	12.9	-0.1	232	80	59	81	58	70	296	-0.050	9.81	0.050
113	14.734	15.417	0.13	0.14	1.40	76	-0.86	1.09	76	-1.20	90	0.068	100	101	12.9	0.0	232	80	59	81	58	70	296	-0.050	9.88	0.050
114	14.864	15.553	0.13	0.14	1.39	76	-0.89	1.08	76	-1.40	90	0.067	101	101	12.8	-0.1	233	80	59	81	58	69	296	-0.050	9.91	0.050
115	14.994	15.690	0.13	0.14	1.38	76	-0.79	1.08	76	-1.30	90	0.069	99	101	12.8	-0.1	233	80	59	81	58	70	296	-0.050	9.97	0.050
116	15.124	15.826	0.13	0.14	1.40	76	-0.45	1.08	76	-1.40	89	0.068	100	100	12.7	0.0	233	80	59	81	58	70	296	-0.050	9.96	0.050
117	15.254	15.963	0.13	0.14	1.40	76	-0.91	1.09	76	-1.40	89	0.070	99	100	12.7	0.0	233	80	59	81	58	70	297	-0.040	10.08	0.050
118	15.385	16.099	0.13	0.14	1.39	76	-0.46	1.09	76	-1.30	89	0.069	100	100	12.6	-0.1	235	80	59	80	58	71	297	-0.050	10.14	0.050
119	15.515	16.236	0.13	0.14	1.40	76	-0.93	1.08	76	-1.20	89	0.068	100	101	12.5	-0.1	234	80	59	80	58	70	298	-0.050	10.24	0.050
120	15.645	16.373	0.13	0.14	1.40	76	-0.44	1.08	76	-1.50	89	0.069	99	100	12.5	0.0	236	80	59	80	58	70	298	-0.050	10.41	0.050
121	15.775	16.509	0.13	0.14	1.38	76	-0.92	1.08	76	-1.40	89	0.069	99	100	12.4	-0.1	236	80	59	80	58	71	299	-0.050	10.54	0.050
122	15.906	16.646	0.13	0.14	1.39	76	-0.85	1.08	76	-1.20	89	0.067	102	102	12.4	0.0	236	80	59	80	58	70	299	-0.050	10.65	0.050
123	16.035	16.782	0.13	0.14	1.41	76	-0.94	1.08	76	-1.20	89	0.068	99	100	12.4	-0.1	236	82	59	80	58	70	300	-0.050	10.61	0.050
124	16.165	16.919	0.13	0.14	1.39	76	-0.83	1.09	76	-1.30	89	0.068	100	101	12.3	-0.1	237	83	59	80	58	69	301	-0.050	10.19	0.060
125	16.296	17.055	0.13	0.14	1.38	76	-0.50	1.09	76	-1.30	89	0.068	101	100	12.2	0.0	238	84	59	81	58	70	301	-0.050	9.93	0.060
126	16.426	17.192	0.13	0.14	1.40	76	-0.86	1.07	76	-1.50	89	0.068	100	101	12.2	-0.1	238	85	59	81	58	70	302	-0.050	9.67	0.050
127	16.555	17.329	0.13	0.14	1.39	76	-0.89	1.08	76	-1.30	88	0.068	99	101	12.1	0.0	237	85	59	81	58	70	302	-0.050	9.47	0.050
128	16.686	17.464	0.13	0.13	1.40	76	-0.94	1.08	76	-1.50	88	0.069	100	99	12.1	0.0	236	85	59	81	58	70	302	-0.050	9.35	0.050
129	16.815	17.602	0.13	0.14	1.40	76	-0.44	1.08	76	-1.40	89	0.068	99	102	12.0	-0.1	235	85	59	81	58	70	302	-0.040	9.27	0.050
130	16.945	17.738	0.13	0.14	1.39	76	-0.47	1.08	76	-1.50	88	0.069	99	100	12.0	0.0	234	85	59	81	58	70	301	-0.040	9.23	0.050
131	17.076	17.875	0.13	0.14	1.40	76	-0.81	1.09	76	-1.50	88	0.069	100	100	12.0	0.0	233	85	59	81	58	70	301	-0.040	9.15	0.050
132	17.205	18.011	0.13	0.14	1.40	76	-0.45	1.09	76	-1.40	88	0.068	99	100	11.9	-0.1	232	85	59	80	58	70	301	-0.040	9.13	0.050
133	17.335	18.148	0.13	0.14	1.39	76	-0.54	1.07	76	-1.40	88	0.069	99	100	11.9	0.0	231	85	59	80	58	71	300	-0.040	9.10	0.050
134	17.466	18.285	0.13	0.14	1.38	76	-0.88	1.08	76	-1.40	88	0.068	101	101	11.8	-0.1	230	85	59	80	58	70	300	-0.040	9.07	0.050
135	17.596	18.421	0.13	0.14	1.40	76	-0.54	1.08	76	-1.40	88	0.069	99	100	11.8	0.0	229	85	59	80	58	70	300	-0.040	9.06	0.050
136	17.725	18.558	0.13	0.14	1.40	76	-0.45	1.08	76	-1.20	87	0.069	98	100	11.8	-0.1	228	85	59	80	58	69	299	-0.040	9.14	0.050
137	17.856	18.694	0.13	0.14	1.38	76	-0.76	1.08	76	-1.40	87	0.068	101	100	11.7	0.0	227	86	59	80	58	70	299	-0.040	9.15	0.050
138	17.986	18.831	0.13	0.14	1.40	75	-0.60	1.09	76	-1.40	87	0.068	100	101	11.6	-0.1	227	86	58	80	58	70	298	-0.040	9.22	0.050
139	18.115	18.968	0.13	0.14	1.39	75	-0.44	1.08	76	-1.20	87	0.069	99	100	11.6	0.0	227	87	58	80	58	69	298	-0.040	9.24	0.050
140	18.245	19.105	0.13	0.14	1.39	75	-0.49	1.08	76	-1.30	86	0.068	100	101	11.6	0.0	227	88	58	80	58	70	298	-0.040	9.30	0.050
141	18.376	19.242	0.13	0.14	1.39	75	-0.61	1.08	76	-1.20	87	0.068	101	101	11.5	0.0	225	88	58	80	58	70	298	-0.040	9.30	0.050
142	18.505	19.378	0.13	0.14	1.40	75	-0.45	1.09	76	-1.40	86	0.070	98	99	11.5	0.0	225	88	58	80	58	69	298	-0.040	9.36	0.060
143	18.635	19.515	0.13	0.14	1.40	75	-0.74	1.07	75	-1.20	86	0.072	97	98	11.4	-0.1	225	84	58	80	58	69	298	-0.040	9.38	0.060
144	18.766	19.651	0.13	0.14	1.41	75	-0.93	1.08	75	-1.20	86	0.068	101	100	11.4	0.0	225	84	58	80	58	69	297	-0.040	9.47	0.060
145	18.896	19.788	0.13	0.14	1.40	75	-0.75	1.09	75	-1.50	87	0.070	99	100	11.4	0.0	224	84	58	80	58	69	297	-0.040	9.49	0.060
146	19.026	19.925	0.13	0.14	1.39	75	-0.45	1.09	75	-1.20	87	0.067	101	102	11.3	-0.1	224	84	59	80	58	69	297	-0.040	9.58	0.060
147	19.157	20.061	0.13	0.14	1.41	75	-0.64	1.08	75	-1.20	87	0.070	99	99	11.3	0.0	224	83	59	80	58	69	297	-0.040	9.60	0.060
148	19.286	20.199	0.13	0.14	1.40	75	-0.50	1.09	75	-1.30	87	0.069	99	101	11.2	0.0	224	82	58	81	58	70	297	-0.040	9.74	0.060
149	19.417	20.334	0.13	0.13	1.40	75	-0.43	1.08	75	-1.50	87	0.069	100	99	11.2	0.0	224	80	59	82	58	70	298	-0.040	9.67	0.050

Run:	5	Particulate Sampling Data													Fuel Weight (lb)		Temperature Data (°F)							Stack Gas Data		
Elapsed Time (min)	Gas Meter 1 (ft^3)	Gas Meter 2 (ft^3)	Sample Rate 1 (cfm)	Sample Rate 2 (cfm)	Orifice dH 1 ("H_2O)	Meter Temp 1 (°F)	Meter Vacuum 1 ("Hg)	Orifice dH 2 ("H_2O)	Meter Temp 2 (°F)	Meter Vacuum 2 ("Hg)	Dilution Tunnel (°F)	Tunnel Center dP	Pro. Rate 1	Pro. Rate 2	Scale Reading	Weight Change	Stack	Filter 1	Dryer 1	Filter 2	Dryer 2	Ambient	Avg. Surface	Draft ("H_2O)	CO_2 (%)	CO (%)
150	19.547	20.472	0.13	0.14	1.40	75	-0.77	1.07	75	-1.40	87	0.070	99	101	11.2	0.0	223	80	59	83	58	69	298	-0.040	9.63	0.050
151	19.677	20.608	0.13	0.14	1.41	75	-0.84	1.07	75	-1.20	86	0.070	99	99	11.1	-0.1	224	81	59	84	58	70	297	-0.040	9.67	0.050
152	19.807	20.744	0.13	0.14	1.40	75	-0.94	1.08	75	-1.30	86	0.068	100	100	11.1	0.0	223	82	59	84	58	70	297	-0.040	9.74	0.040
153	19.938	20.881	0.13	0.14	1.39	75	-0.68	1.08	75	-1.20	86	0.070	99	100	11.0	-0.1	223	83	59	84	58	69	297	-0.040	9.77	0.040
154	20.068	21.017	0.13	0.14	1.41	75	-0.68	1.08	75	-1.20	86	0.069	99	100	11.0	0.0	223	84	59	83	58	70	297	-0.040	9.84	0.040
155	20.198	21.154	0.13	0.14	1.39	75	-0.59	1.08	75	-1.20	86	0.069	99	100	10.9	-0.1	222	86	59	83	58	70	297	-0.040	9.92	0.040
156	20.328	21.290	0.13	0.14	1.39	75	-0.74	1.08	75	-1.40	86	0.070	99	99	10.9	0.0	222	87	59	83	58	69	297	-0.040	10.05	0.030
157	20.458	21.427	0.13	0.14	1.41	75	-0.85	1.07	75	-1.30	85	0.068	100	101	10.9	0.0	222	87	58	83	58	69	298	-0.040	10.14	0.030
158	20.588	21.563	0.13	0.14	1.40	75	-0.44	1.09	75	-1.20	86	0.069	99	100	10.8	-0.1	223	86	59	82	58	69	298	-0.040	10.21	0.030
159	20.719	21.700	0.13	0.14	1.39	75	-0.90	1.09	75	-1.20	85	0.069	100	100	10.7	-0.1	223	85	58	82	58	69	298	-0.040	10.18	0.030
160	20.849	21.836	0.13	0.14	1.39	75	-0.47	1.08	75	-1.50	85	0.069	99	100	10.7	0.0	223	84	58	82	58	68	299	-0.040	10.28	0.030
161	20.978	21.973	0.13	0.14	1.41	75	-0.82	1.08	75	-1.50	85	0.068	99	101	10.7	0.0	222	83	58	82	58	69	299	-0.040	10.14	0.030
162	21.108	22.110	0.13	0.14	1.38	75	-0.93	1.08	75	-1.40	85	0.067	101	102	10.6	0.0	223	82	58	81	58	69	300	-0.040	9.95	0.030
163	21.239	22.245	0.13	0.14	1.40	75	-0.52	1.08	75	-1.40	85	0.068	101	100	10.6	-0.1	222	82	58	81	58	69	300	-0.040	9.79	0.040
164	21.369	22.382	0.13	0.14	1.39	75	-0.89	1.08	75	-1.30	85	0.069	99	100	10.5	0.0	222	81	58	81	58	69	301	-0.040	9.61	0.030
165	21.499	22.519	0.13	0.14	1.39	75	-0.54	1.08	75	-1.30	85	0.069	99	100	10.5	0.0	222	81	58	81	58	69	301	-0.040	9.51	0.040
166	21.629	22.655	0.13	0.14	1.40	75	-0.92	1.08	75	-1.50	85	0.069	99	100	10.5	-0.1	221	81	58	81	58	68	301	-0.040	9.41	0.030
167	21.759	22.792	0.13	0.14	1.40	75	-0.93	1.08	75	-1.20	85	0.069	99	100	10.4	0.0	221	81	58	81	58	69	301	-0.040	9.39	0.030
168	21.889	22.928	0.13	0.14	1.40	75	-0.67	1.07	75	-1.20	85	0.068	100	100	10.4	0.0	220	81	58	81	58	68	302	-0.040	9.39	0.040
169	22.019	23.065	0.13	0.14	1.41	75	-0.59	1.08	75	-1.40	85	0.068	100	101	10.4	0.0	219	82	58	81	58	68	302	-0.040	9.38	0.030
170	22.149	23.201	0.13	0.14	1.41	74	-0.80	1.09	75	-1.40	84	0.069	99	99	10.3	-0.1	219	82	58	81	58	69	302	-0.040	9.39	0.040
171	22.279	23.338	0.13	0.14	1.40	74	-0.67	1.08	75	-1.20	84	0.070	99	100	10.3	0.0	218	82	58	82	58	68	302	-0.040	9.35	0.040
172	22.410	23.475	0.13	0.14	1.40	74	-0.67	1.09	75	-1.40	84	0.068	101	101	10.2	0.0	218	82	58	82	57	68	302	-0.040	9.32	0.040
173	22.540	23.611	0.13	0.14	1.40	74	-0.46	1.09	75	-1.50	84	0.068	100	100	10.2	0.0	217	82	58	82	57	68	302	-0.040	9.28	0.040
174	22.670	23.748	0.13	0.14	1.40	74	-0.48	1.08	74	-1.40	84	0.068	100	101	10.2	-0.1	217	82	58	82	57	68	302	-0.040	9.25	0.040
175	22.800	23.884	0.13	0.14	1.39	74	-0.45	1.08	74	-1.40	84	0.069	99	100	10.1	0.0	217	82	58	82	57	68	302	-0.040	9.20	0.040
176	22.930	24.021	0.13	0.14	1.41	74	-0.94	1.08	74	-1.30	84	0.068	100	101	10.1	-0.1	216	82	58	82	57	69	302	-0.040	9.19	0.040
177	23.060	24.157	0.13	0.14	1.39	74	-0.76	1.09	74	-1.40	84	0.069	99	100	10.1	0.0	216	82	58	82	57	68	302	-0.040	9.15	0.040
178	23.190	24.294	0.13	0.14	1.38	74	-0.59	1.08	74	-1.40	84	0.069	99	100	10.0	-0.1	216	82	58	82	57	68	302	-0.040	9.14	0.040
179	23.321	24.431	0.13	0.14	1.41	74	-0.69	1.09	74	-1.20	84	0.069	100	100	10.0	0.0	216	83	58	82	57	68	302	-0.040	9.08	0.040
180	23.450	24.567	0.13	0.14	1.40	74	-0.79	1.08	74	-1.30	83	0.069	98	100	10.0	-0.1	215	83	58	82	57	69	302	-0.040	9.10	0.040
181	23.580	24.704	0.13	0.14	1.39	74	-0.93	1.08	74	-1.30	84	0.069	99	100	9.9	0.0	215	83	58	82	57	69	302	-0.040	9.10	0.040
182	23.710	24.840	0.13	0.14	1.39	74	-0.47	1.07	74	-1.40	84	0.068	100	100	9.9	0.0	214	83	58	82	57	69	302	-0.040	9.08	0.050
183	23.840	24.976	0.13	0.14	1.40	74	-0.61	1.08	74	-1.40	84	0.068	100	100	9.8	-0.1	213	83	58	82	57	68	302	-0.040	9.06	0.050
184	23.969	25.113	0.13	0.14	1.39	74	-0.47	1.08	74	-1.20	84	0.070	98	100	9.8	0.0	213	83	58	83	57	69	302	-0.040	9.06	0.050
185	24.100	25.249	0.13	0.14	1.40	74	-0.54	1.08	74	-1.40	84	0.069	100	100	9.8	0.0	213	83	58	83	57	69	302	-0.040	9.09	0.050
186	24.229	25.386	0.13	0.14	1.40	74	-0.46	1.08	74	-1.20	84	0.070	98	100	9.7	0.0	213	83	58	83	57	69	302	-0.040	9.03	0.050
187	24.359	25.522	0.13	0.14	1.39	74	-0.44	1.08	74	-1.30	84	0.068	100	100	9.7	0.0	212	83	58	83	57	69	302	-0.040	9.01	0.050
188	24.489	25.658	0.13	0.14	1.38	74	-0.46	1.08	74	-1.40	83	0.068	100	100	9.7	0.0	212	84	58	83	57	68	303	-0.040	8.98	0.050
189	24.619	25.794	0.13	0.14	1.40	74	-0.78	1.08	74	-1.40	84	0.070	99	99	9.6	0.0	212	84	58	83	57	69	303	-0.040	9.02	0.050
190	24.748	25.931	0.13	0.14	1.39	74	-0.94	1.08	74	-1.40	84	0.069	99	100	9.6	0.0	212	84	58	83	57	69	303	-0.040	9.15	0.050
191	24.878	26.068	0.13	0.14	1.38	74	-0.86	1.07	74	-1.30	84	0.068	100	101	9.6	-0.1	212	84	58	83	57	69	303	-0.040	9.20	0.050
192	25.008	26.204	0.13	0.14	1.38	74	-0.92	1.07	74	-1.20	83	0.070	98	99	9.5	0.0	213	84	58	83	57	68	303	-0.040	9.26	0.050
193	25.137	26.340	0.13	0.14	1.40	74	-0.64	1.08	74	-1.20	83	0.070	98	99	9.5	0.0	212	84	58	83	57	68	303	-0.040	9.29	0.050
194	25.267	26.476	0.13	0.14	1.38	74	-0.92	1.08	74	-1.50	84	0.069	99	100	9.5	0.0	212	84	57	83	57	68	303	-0.040	9.30	0.050
195	25.397	26.612	0.13	0.14	1.40	74	-0.94	1.08	74	-1.30	84	0.070	99	99	9.4	0.0	213	84	58	83	57	68	303	-0.040	9.28	0.050
196	25.526	26.749	0.13	0.14	1.39	74	-0.50	1.08	74	-1.20	84	0.068	99	101	9.4	0.0	213	84	57	83	57	69	303	-0.040	9.26	0.050
197	25.656	26.885	0.13	0.14	1.39	73	-0.49	1.08	74	-1.20	84	0.068	100	100	9.3	-0.1	214	84	57	83	57	67	304	-0.040	9.26	0.060
198	25.786	27.021	0.13	0.14	1.38	73	-0.51	1.08	74	-1.20	84	0.069	99	100	9.3	-0.1	214	84	57	83	57	68	304	-0.040	9.23	0.060
199	25.915	27.157	0.13	0.14	1.40	73	-0.45	1.08	74	-1.20	83	0.071	97	98	9.3	0.0	214	84	57	83	57	67	304	-0.040	9.25	0.060
200	26.045	27.294	0.13	0.14	1.39	73	-0.76	1.08	74	-1.30	84	0.070	99	100	9.2	-0.1	214	84	57	83	57	68	304	-0.040	9.22	0.060
201	26.175	27.430	0.13	0.14	1.38	73	-0.45	1.08	74	-1.20	84	0.070	99	99	9.2	0.0	213	85	57	83	57	67	304	-0.040	9.18	0.060
202	26.305	27.566	0.13	0.14	1.39	73	-0.43	1.07	74	-1.20	84	0.069	99	100	9.2	0.0	213	85	57	83	57	67	304	-0.040	9.19	0.060
203	26.434	27.702	0.13	0.14	1.40	73	-0.90	1.08	74	-1.20	83	0.068	99	100	9.1	0.0	213	85	57	83	57	67	304	-0.040	9.23	0.050

Run:	5	Particulate Sampling Data													Fuel Weight (lb)		Temperature Data (°F)							Stack Gas Data		
Elapsed Time (min)	Gas Meter 1 (ft^3)	Gas Meter 2 (ft^3)	Sample Rate 1 (cfm)	Sample Rate 2 (cfm)	Orifice dH 1 ("H_2O)	Meter Temp 1 (°F)	Meter Vacuum 1 ("Hg)	Orifice dH 2 ("H_2O)	Meter Temp 2 (°F)	Meter Vacuum 2 ("Hg)	Dilution Tunnel (°F)	Tunnel Center dP	Pro. Rate 1	Pro. Rate 2	Scale Reading	Weight Change	Stack	Filter 1	Dryer 1	Filter 2	Dryer 2	Ambient	Avg. Surface	Draft ("H_2O)	CO_2 (%)	CO (%)
204	26.563	27.838	0.13	0.14	1.38	73	-0.43	1.09	74	-1.20	83	0.069	99	100	9.1	0.0	213	85	57	83	57	67	304	-0.040	9.25	0.050
205	26.693	27.974	0.13	0.14	1.40	73	-0.49	1.07	73	-1.30	84	0.069	99	100	9.0	0.0	213	85	57	83	57	68	304	-0.040	9.27	0.060
206	26.822	28.111	0.13	0.14	1.40	73	-0.88	1.07	73	-1.20	83	0.068	99	101	9.0	0.0	213	85	57	83	57	68	304	-0.040	9.22	0.060
207	26.952	28.246	0.13	0.13	1.38	73	-0.60	1.08	73	-1.20	83	0.069	99	99	9.0	0.0	213	85	57	83	57	67	304	-0.040	9.24	0.050
208	27.082	28.383	0.13	0.14	1.39	73	-0.92	1.07	73	-1.20	83	0.070	99	100	9.0	0.0	213	85	57	83	57	68	304	-0.040	9.25	0.050
209	27.212	28.519	0.13	0.14	1.40	73	-0.83	1.08	73	-1.40	84	0.068	100	101	8.9	0.0	213	85	57	83	57	68	304	-0.040	9.27	0.060
210	27.341	28.655	0.13	0.14	1.39	73	-0.86	1.08	73	-1.40	83	0.069	99	100	8.9	-0.1	213	85	57	83	57	68	304	-0.040	9.28	0.060
211	27.470	28.792	0.13	0.14	1.38	73	-0.64	1.08	73	-1.20	83	0.069	99	101	8.8	0.0	213	85	57	83	57	69	305	-0.040	9.25	0.060
212	27.600	28.927	0.13	0.13	1.40	73	-0.47	1.07	73	-1.20	84	0.069	99	99	8.8	0.0	213	85	57	83	57	67	305	-0.040	9.29	0.060
213	27.729	29.064	0.13	0.14	1.40	73	-0.89	1.08	73	-1.30	83	0.069	99	101	8.8	0.0	212	85	57	83	57	69	305	-0.040	9.20	0.060
214	27.859	29.200	0.13	0.14	1.39	73	-0.87	1.08	73	-1.40	83	0.069	99	100	8.7	0.0	212	85	57	83	57	69	305	-0.040	9.13	0.060
215	27.989	29.336	0.13	0.14	1.40	73	-0.46	1.07	73	-1.40	84	0.068	100	101	8.7	0.0	212	85	57	83	57	69	305	-0.040	9.09	0.050
216	28.118	29.472	0.13	0.14	1.40	73	-0.70	1.08	73	-1.20	83	0.069	99	100	8.7	0.0	211	85	57	83	57	68	305	-0.040	9.03	0.060
217	28.247	29.608	0.13	0.14	1.39	73	-0.48	1.08	73	-1.40	83	0.069	99	100	8.6	0.0	211	85	57	83	57	67	304	-0.040	9.04	0.060
218	28.377	29.744	0.13	0.14	1.38	73	-0.75	1.07	73	-1.30	83	0.069	99	100	8.6	0.0	211	85	57	83	56	67	304	-0.040	9.03	0.060
219	28.507	29.881	0.13	0.14	1.39	73	-0.44	1.08	73	-1.30	83	0.069	99	101	8.6	0.0	212	85	57	83	56	67	304	-0.040	9.18	0.050
220	28.636	30.016	0.13	0.13	1.39	73	-0.87	1.08	73	-1.20	83	0.068	99	100	8.5	0.0	211	85	57	83	56	68	304	-0.040	9.28	0.050
221	28.765	30.152	0.13	0.14	1.38	73	-0.82	1.08	73	-1.40	83	0.071	97	98	8.5	0.0	210	85	57	83	56	68	304	-0.040	9.22	0.060
222	28.895	30.289	0.13	0.14	1.40	73	-0.92	1.08	73	-1.50	83	0.068	100	101	8.5	0.0	209	85	57	83	56	67	304	-0.040	9.15	0.060
223	29.024	30.424	0.13	0.13	1.40	73	-0.63	1.08	73	-1.40	83	0.068	99	100	8.4	0.0	209	85	57	83	56	67	304	-0.040	9.21	0.060
224	29.154	30.561	0.13	0.14	1.38	73	-0.71	1.07	73	-1.40	83	0.068	100	101	8.4	-0.1	209	85	57	83	56	67	304	-0.040	9.11	0.060
225	29.284	30.697	0.13	0.14	1.39	73	-0.92	1.08	73	-1.40	83	0.069	99	100	8.4	0.0	209	85	57	83	56	67	304	-0.040	9.06	0.060
226	29.413	30.833	0.13	0.14	1.38	73	-0.80	1.08	73	-1.40	83	0.069	99	100	8.4	0.0	209	85	57	83	56	68	304	-0.040	9.02	0.050
227	29.542	30.969	0.13	0.14	1.40	73	-0.74	1.09	73	-1.20	82	0.069	99	100	8.3	-0.1	208	85	57	83	56	68	304	-0.040	9.05	0.060
228	29.672	31.105	0.13	0.14	1.38	73	-0.71	1.07	73	-1.40	83	0.069	99	100	8.3	0.0	208	85	57	83	56	68	304	-0.040	9.04	0.060
229	29.802	31.242	0.13	0.14	1.40	73	-0.76	1.08	73	-1.40	83	0.068	100	101	8.2	0.0	208	85	57	83	56	67	304	-0.040	9.03	0.060
230	29.931	31.377	0.13	0.13	1.39	73	-0.43	1.08	73	-1.30	83	0.070	98	98	8.2	-0.1	207	85	57	83	56	68	304	-0.040	9.04	0.060
231	30.061	31.513	0.13	0.14	1.39	73	-0.53	1.08	73	-1.40	82	0.069	99	100	8.2	0.0	208	85	57	83	56	68	304	-0.040	9.05	0.060
232	30.191	31.650	0.13	0.14	1.40	73	-0.60	1.08	73	-1.40	82	0.069	99	100	8.1	0.0	207	85	57	83	56	69	304	-0.040	9.04	0.060
233	30.320	31.785	0.13	0.14	1.40	73	-0.54	1.08	73	-1.40	83	0.068	99	100	8.1	0.0	207	85	57	83	56	69	304	-0.040	9.03	0.060
234	30.449	31.922	0.13	0.14	1.40	73	-0.88	1.08	73	-1.40	83	0.070	98	100	8.1	0.0	207	85	57	83	56	68	304	-0.040	9.04	0.050
235	30.579	32.058	0.13	0.14	1.38	73	-0.60	1.08	73	-1.20	82	0.071	98	98	8.0	-0.1	206	85	57	83	56	68	304	-0.040	8.99	0.050
236	30.709	32.193	0.13	0.13	1.40	73	-0.48	1.08	73	-1.20	83	0.069	99	99	8.0	0.0	206	85	57	83	56	68	304	-0.040	8.97	0.050
237	30.838	32.330	0.13	0.14	1.39	73	-0.62	1.07	73	-1.20	83	0.070	98	100	8.0	0.0	207	85	57	83	56	67	305	-0.040	9.01	0.060
238	30.967	32.465	0.13	0.14	1.39	73	-0.59	1.08	73	-1.20	82	0.069	99	99	7.9	0.0	207	85	57	83	56	67	305	-0.040	9.02	0.060
239	31.097	32.602	0.13	0.14	1.40	73	-0.93	1.08	73	-1.20	82	0.069	99	100	7.9	0.0	208	85	57	83	56	67	305	-0.040	9.05	0.060
240	31.226	32.738	0.13	0.14	1.40	72	-0.80	1.09	73	-1.40	82	0.070	98	99	7.9	0.0	207	85	57	83	56	67	305	-0.040	8.96	0.060
241	31.355	32.874	0.13	0.14	1.39	73	-0.46	1.07	73	-1.40	82	0.068	99	100	7.8	-0.1	207	85	57	83	56	68	305	-0.040	8.98	0.060
242	31.485	33.010	0.13	0.14	1.38	72	-0.80	1.08	73	-1.40	82	0.069	99	100	7.8	0.0	208	85	57	83	56	67	304	-0.040	8.96	0.060
243	31.615	33.146	0.13	0.14	1.39	72	-0.73	1.09	73	-1.40	83	0.069	100	100	7.8	0.0	208	85	57	83	56	67	305	-0.040	8.99	0.060
244	31.744	33.282	0.13	0.14	1.40	72	-0.72	1.07	73	-1.40	82	0.068	99	100	7.8	0.0	207	85	57	83	56	68	305	-0.040	9.01	0.060
245	31.874	33.419	0.13	0.14	1.38	72	-0.72	1.08	73	-1.40	82	0.068	100	101	7.7	0.0	207	85	57	83	56	67	305	-0.040	9.00	0.060
246	32.004	33.554	0.13	0.14	1.39	72	-0.67	1.08	73	-1.20	83	0.068	100	100	7.7	0.0	208	85	57	83	56	68	305	-0.040	9.07	0.060
247	32.132	33.691	0.13	0.14	1.40	72	-0.82	1.07	73	-1.20	82	0.069	98	100	7.6	0.0	208	85	57	83	56	68	305	-0.040	9.11	0.060
248	32.262	33.827	0.13	0.14	1.38	72	-0.49	1.08	73	-1.30	82	0.068	100	100	7.6	0.0	208	85	57	83	56	67	305	-0.040	9.13	0.060
249	32.392	33.963	0.13	0.14	1.39	72	-0.93	1.08	72	-1.40	82	0.069	99	100	7.6	0.0	208	85	57	83	56	68	305	-0.040	9.11	0.060
250	32.521	34.099	0.13	0.14	1.39	72	-0.64	1.07	72	-1.30	82	0.070	98	99	7.5	0.0	209	85	57	83	56	68	305	-0.040	9.14	0.060
251	32.650	34.235	0.13	0.14	1.39	72	-0.87	1.07	72	-1.20	82	0.069	99	100	7.5	-0.1	209	84	57	83	56	67	306	-0.040	9.16	0.060
252	32.780	34.371	0.13	0.14	1.38	72	-0.85	1.08	72	-1.20	82	0.068	100	101	7.5	0.0	208	85	57	83	56	67	306	-0.040	9.11	0.060
253	32.910	34.507	0.13	0.14	1.37	72	-0.59	1.09	72	-1.20	82	0.069	99	100	7.4	-0.1	210	84	57	83	56	67	306	-0.040	9.08	0.060
254	33.039	34.643	0.13	0.14	1.39	72	-0.48	1.07	72	-1.20	82	0.069	99	100	7.4	0.0	209	84	57	83	56	68	306	-0.040	9.06	0.060
255	33.168	34.779	0.13	0.14	1.39	72	-0.44	1.08	72	-1.40	82	0.069	99	100	7.4	0.0	210	84	57	83	56	67	307	-0.040	9.07	0.060
256	33.298	34.915	0.13	0.14	1.40	72	-0.65	1.09	72	-1.40	82	0.070	99	99	7.3	-0.1	211	84	56	83	56	67	307	-0.040	9.05	0.060
257	33.427	35.051	0.13	0.14	1.40	72	-0.51	1.07	72	-1.30	82	0.068	99	101	7.3	0.0	211	84	56	83	56	67	307	-0.040	9.06	0.060

Run:	5	Particulate Sampling Data													Fuel Weight (lb)		Temperature Data (°F)							Stack Gas Data		
Elapsed Time (min)	Gas Meter 1 (ft^3)	Gas Meter 2 (ft^3)	Sample Rate 1 (cfm)	Sample Rate 2 (cfm)	Orifice dH 1 ("H_2O)	Meter Temp 1 (°F)	Meter Vacuum 1 ("Hg)	Orifice dH 2 ("H_2O)	Meter Temp 2 (°F)	Meter Vacuum 2 ("Hg)	Dilution Tunnel (°F)	Tunnel Center dP	Pro. Rate 1	Pro. Rate 2	Scale Reading	Weight Change	Stack	Filter 1	Dryer 1	Filter 2	Dryer 2	Ambient	Avg. Surface	Draft ("H_2O)	CO_2 (%)	CO (%)
258	33.556	35.187	0.13	0.14	1.40	72	-0.62	1.08	72	-1.20	83	0.068	100	101	7.2	0.0	211	84	56	83	56	67	307	-0.040	9.12	0.060
259	33.686	35.323	0.13	0.14	1.38	72	-0.44	1.08	72	-1.40	82	0.069	99	100	7.2	0.0	212	84	56	83	56	66	307	-0.040	9.16	0.060
260	33.816	35.459	0.13	0.14	1.40	72	-0.62	1.08	72	-1.20	82	0.069	99	100	7.2	0.0	213	84	56	83	56	67	307	-0.040	9.17	0.060
261	33.945	35.595	0.13	0.14	1.40	72	-0.87	1.08	72	-1.40	82	0.070	98	99	7.1	-0.1	213	84	56	83	56	67	307	-0.040	9.13	0.060
262	34.074	35.731	0.13	0.14	1.39	72	-0.60	1.08	72	-1.40	82	0.069	99	100	7.1	0.0	214	84	56	83	56	67	308	-0.040	9.19	0.060
263	34.203	35.867	0.13	0.14	1.33	72	-0.40	1.07	72	-1.20	82	0.069	99	100	7.1	0.0	214	84	56	83	56	67	308	-0.040	9.22	0.060
264	34.333	36.002	0.13	0.14	1.41	72	-0.48	1.08	72	-1.40	82	0.069	99	99	7.0	-0.1	214	84	56	83	56	67	308	-0.040	9.23	0.060
265	34.463	36.139	0.13	0.14	1.40	72	-0.58	1.08	72	-1.20	82	0.068	100	101	7.0	0.0	213	84	56	83	56	67	308	-0.040	9.13	0.060
266	34.593	36.275	0.13	0.14	1.38	72	-0.54	1.08	72	-1.30	82	0.069	99	100	6.9	0.0	214	84	56	83	56	67	308	-0.040	9.15	0.060
267	34.723	36.410	0.13	0.13	1.38	72	-0.60	1.07	72	-1.40	82	0.069	99	99	6.9	0.0	214	84	56	83	56	66	308	-0.040	9.12	0.060
268	34.852	36.546	0.13	0.14	1.41	72	-0.63	1.08	72	-1.40	82	0.070	98	99	6.9	0.0	215	84	56	83	56	67	308	-0.040	9.16	0.060
269	34.982	36.682	0.13	0.14	1.39	72	-0.80	1.08	72	-1.30	82	0.068	100	101	6.8	-0.1	214	84	56	83	56	67	308	-0.040	9.19	0.060
270	35.112	36.818	0.13	0.14	1.39	72	-0.91	1.07	72	-1.40	82	0.069	99	100	6.8	0.0	215	84	56	83	55	67	308	-0.040	9.23	0.060
271	35.241	36.954	0.13	0.14	1.40	72	-0.43	1.08	72	-1.20	82	0.068	99	101	6.8	0.0	214	84	56	83	56	67	308	-0.040	9.20	0.060
272	35.371	37.090	0.13	0.14	1.40	72	-0.59	1.08	72	-1.40	82	0.070	99	99	6.7	0.0	215	84	56	83	55	67	308	-0.040	9.27	0.060
273	35.501	37.226	0.13	0.14	1.40	72	-0.93	1.07	72	-1.40	82	0.069	99	100	6.7	0.0	215	84	56	82	55	67	308	-0.040	9.31	0.060
274	35.630	37.362	0.13	0.14	1.41	72	-0.59	1.08	72	-1.30	82	0.069	99	100	6.6	0.0	216	84	56	83	55	67	309	-0.040	9.34	0.060
275	35.760	37.497	0.13	0.13	1.40	72	-0.71	1.08	72	-1.30	82	0.069	99	99	6.6	0.0	217	84	56	83	55	66	309	-0.040	9.39	0.060
276	35.890	37.633	0.13	0.14	1.39	72	-0.57	1.07	72	-1.20	82	0.069	99	100	6.6	0.0	217	84	56	83	55	66	309	-0.040	9.39	0.060
277	36.020	37.769	0.13	0.14	1.41	72	-0.93	1.08	72	-1.20	82	0.068	100	101	6.5	0.0	216	84	56	82	55	66	309	-0.040	9.39	0.060
278	36.150	37.905	0.13	0.14	1.40	72	-0.80	1.07	72	-1.30	81	0.068	100	101	6.5	-0.1	217	84	56	82	55	66	309	-0.040	9.44	0.060
279	36.279	38.041	0.13	0.14	1.38	72	-0.52	1.07	72	-1.30	82	0.070	98	99	6.5	0.0	217	84	56	82	55	67	309	-0.040	9.47	0.060
280	36.410	38.177	0.13	0.14	1.38	72	-0.63	1.08	72	-1.40	82	0.070	100	99	6.4	-0.1	217	84	56	82	55	67	310	-0.040	9.50	0.060
281	36.539	38.312	0.13	0.13	1.40	72	-0.90	1.08	72	-1.20	82	0.069	99	99	6.4	0.0	218	84	56	82	55	67	310	-0.040	9.56	0.060
282	36.668	38.448	0.13	0.14	1.40	72	-0.47	1.08	72	-1.20	82	0.070	98	99	6.3	0.0	218	84	56	82	55	67	310	-0.040	9.60	0.060
283	36.798	38.584	0.13	0.14	1.40	72	-0.78	1.08	72	-1.40	82	0.069	99	100	6.3	0.0	219	84	56	82	55	66	310	-0.040	9.66	0.060
284	36.927	38.720	0.13	0.14	1.40	72	-0.93	1.08	72	-1.30	82	0.068	99	101	6.3	0.0	220	84	56	82	55	66	311	-0.040	9.79	0.070
285	37.057	38.856	0.13	0.14	1.39	72	-0.44	1.06	72	-1.30	81	0.068	100	101	6.2	0.0	221	84	56	82	55	67	311	-0.040	9.84	0.060
286	37.187	38.991	0.13	0.13	1.38	72	-0.91	1.07	72	-1.20	81	0.068	100	100	6.2	0.0	222	84	56	82	55	67	312	-0.040	9.88	0.070
287	37.317	39.127	0.13	0.14	1.41	72	-0.45	1.08	72	-1.30	82	0.069	99	100	6.1	0.0	222	84	56	82	55	67	312	-0.040	9.95	0.070
288	37.446	39.263	0.13	0.14	1.41	72	-0.45	1.07	72	-1.20	81	0.070	98	99	6.1	0.0	222	84	56	82	55	67	313	-0.050	10.04	0.070
289	37.576	39.398	0.13	0.14	1.39	72	-0.54	1.07	72	-1.30	82	0.068	100	100	6.0	-0.1	223	84	56	82	55	67	313	-0.050	10.05	0.070
290	37.706	39.534	0.13	0.14	1.38	72	-0.66	1.08	72	-1.40	82	0.068	100	101	6.0	0.0	224	84	56	82	55	67	314	-0.050	10.12	0.070
291	37.835	39.670	0.13	0.14	1.40	72	-0.67	1.08	72	-1.30	82	0.069	99	100	5.9	-0.1	224	84	56	82	55	67	314	-0.050	10.16	0.070
292	37.965	39.806	0.13	0.14	1.40	71	-0.52	1.07	72	-1.20	82	0.068	100	101	5.9	0.0	226	84	56	82	55	66	315	-0.050	10.26	0.070
293	38.095	39.942	0.13	0.14	1.40	71	-0.71	1.07	72	-1.20	82	0.069	100	100	5.8	-0.1	227	84	56	82	55	67	315	-0.050	10.32	0.070
294	38.224	40.077	0.13	0.13	1.40	71	-0.59	1.08	72	-1.30	82	0.070	98	98	5.8	0.0	227	84	56	82	55	66	316	-0.050	10.38	0.070
295	38.354	40.213	0.13	0.14	1.40	71	-0.85	1.07	72	-1.40	82	0.070	99	99	5.8	0.0	228	84	56	82	55	66	317	-0.050	10.47	0.070
296	38.484	40.349	0.13	0.14	1.38	71	-0.94	1.08	72	-1.30	82	0.069	100	100	5.7	0.0	229	84	56	82	55	66	317	-0.050	10.49	0.070
297	38.614	40.484	0.13	0.14	1.41	71	-0.55	1.08	72	-1.30	82	0.069	100	99	5.7	-0.1	230	84	56	82	55	67	318	-0.050	10.35	0.070
298	38.743	40.620	0.13	0.14	1.41	71	-0.78	1.07	72	-1.40	82	0.069	99	100	5.6	0.0	230	84	56	82	55	67	318	-0.050	10.40	0.070
299	38.873	40.756	0.13	0.14	1.39	71	-0.91	1.07	72	-1.20	82	0.068	100	101	5.6	-0.1	230	84	56	82	55	66	319	-0.050	10.42	0.070
300	39.003	40.891	0.13	0.13	1.39	71	-0.53	1.08	72	-1.40	82	0.069	100	99	5.5	-0.1	232	84	56	82	55	65	319	-0.050	10.74	0.060
301	39.132	41.028	0.13	0.14	1.40	71	-0.43	1.07	72	-1.20	82	0.069	99	101	5.5	0.0	230	84	56	82	55	66	319	-0.050	10.70	0.050
302	39.262	41.164	0.13	0.14	1.39	71	-0.69	1.07	72	-1.40	82	0.069	100	100	5.5	0.0	229	84	56	82	55	65	318	-0.050	10.88	0.050
303	39.392	41.299	0.13	0.13	1.40	71	-0.94	1.08	72	-1.30	82	0.069	100	99	5.4	-0.1	229	84	56	82	55	65	318	-0.050	11.33	0.040
304	39.521	41.435	0.13	0.14	1.40	71	-0.85	1.07	72	-1.20	82	0.069	99	100	5.4	0.0	228	84	56	82	55	65	318	-0.050	11.41	0.040
305	39.652	41.571	0.13	0.14	1.41	71	-0.50	1.08	72	-1.40	82	0.068	101	101	5.3	-0.1	227	84	56	82	55	65	317	-0.050	11.70	0.040
306	39.784	41.706	0.13	0.14	1.43	71	-0.84	1.07	72	-1.30	82	0.070	100	98	5.2	-0.1	225	84	56	82	55	66	317	-0.050	12.11	0.040
307	39.914	41.842	0.13	0.14	1.43	71	-0.50	1.07	72	-1.30	82	0.070	99	99	5.2	0.0	225	83	56	82	55	65	317	-0.050	12.58	0.040
308	40.045	41.978	0.13	0.14	1.42	71	-0.85	1.08	72	-1.40	82	0.069	100	100	5.1	-0.1	225	83	56	82	55	66	318	-0.050	12.98	0.040
309	40.177	42.113	0.13	0.13	1.43	71	-0.49	1.08	71	-1.40	82	0.070	100	99	5.0	-0.1	225	83	56	82	55	66	318	-0.050	13.38	0.060
310	40.307	42.249	0.13	0.14	1.42	71	-0.50	1.07	71	-1.40	82	0.069	100	100	5.0	-0.1	226	83	56	82	55	65	319	-0.050	13.85	0.140
311	40.438	42.385	0.13	0.14	1.41	71	-0.65	1.07	71	-1.30	83	0.070	100	99	4.9	-0.1	228	83	56	82	55	66	320	-0.050	14.02	0.150

Run:	5	Particulate Sampling Data													Fuel Weight (lb)		Temperature Data (°F)							Stack Gas Data		
Elapsed Time (min)	Gas Meter 1 (ft^3)	Gas Meter 2 (ft^3)	Sample Rate 1 (cfm)	Sample Rate 2 (cfm)	Orifice dH 1 ("H_2O)	Meter Temp 1 (°F)	Meter Vacuum 1 ("Hg)	Orifice dH 2 ("H_2O)	Meter Temp 2 (°F)	Meter Vacuum 2 ("Hg)	Dilution Tunnel (°F)	Tunnel Center dP	Pro. Rate 1	Pro. Rate 2	Scale Reading	Weight Change	Stack	Filter 1	Dryer 1	Filter 2	Dryer 2	Ambient	Avg. Surface	Draft ("H_2O)	CO_2 (%)	CO (%)
312	40.569	42.520	0.13	0.14	1.43	71	-0.85	1.08	71	-1.30	82	0.069	100	99	4.9	-0.1	228	83	56	82	55	65	321	-0.050	14.14	0.240
313	40.699	42.656	0.13	0.14	1.43	71	-0.54	1.06	71	-1.30	82	0.070	99	99	4.8	-0.1	229	83	56	82	55	65	323	-0.050	14.32	0.300
314	40.830	42.792	0.13	0.14	1.41	71	-0.58	1.08	71	-1.20	82	0.070	100	99	4.7	-0.1	230	83	56	82	55	65	324	-0.050	14.34	0.350
315	40.962	42.927	0.13	0.13	1.43	71	-0.53	1.07	71	-1.40	82	0.068	102	100	4.6	-0.1	232	83	56	82	55	65	326	-0.050	14.55	0.390
316	41.092	43.063	0.13	0.14	1.43	71	-0.88	1.07	71	-1.40	82	0.069	100	100	4.6	-0.1	233	83	55	82	55	65	328	-0.050	14.63	0.570
317	41.223	43.198	0.13	0.13	1.41	71	-0.75	1.07	71	-1.20	82	0.068	101	100	4.5	-0.1	235	83	55	81	55	66	330	-0.050	14.81	0.620
318	41.354	43.334	0.13	0.14	1.43	71	-0.62	1.07	71	-1.30	82	0.069	100	100	4.4	-0.1	236	83	56	81	55	64	332	-0.050	14.81	0.760
319	41.484	43.470	0.13	0.14	1.43	71	-0.75	1.07	71	-1.40	82	0.068	100	101	4.4	-0.1	237	83	56	81	55	65	334	-0.050	14.71	0.680
320	41.615	43.605	0.13	0.13	1.41	71	-0.50	1.07	71	-1.30	82	0.070	100	99	4.3	0.0	237	83	55	81	55	64	335	-0.050	14.64	0.540
321	41.746	43.741	0.13	0.14	1.43	71	-0.67	1.07	71	-1.20	82	0.070	100	99	4.3	-0.1	237	83	55	81	55	65	337	-0.050	14.70	0.370
322	41.877	43.877	0.13	0.14	1.42	71	-0.90	1.07	71	-1.20	83	0.070	100	99	4.2	-0.1	237	83	56	81	55	66	338	-0.050	14.29	0.300
323	42.008	44.012	0.13	0.13	1.41	71	-0.51	1.07	71	-1.40	83	0.068	101	100	4.2	0.0	237	83	55	81	55	67	339	-0.050	14.02	0.170
324	42.138	44.147	0.13	0.13	1.43	71	-0.91	1.07	71	-1.20	82	0.068	100	100	4.1	-0.1	234	83	55	81	55	65	341	-0.050	13.74	0.090
325	42.269	44.283	0.13	0.14	1.41	71	-0.50	1.07	71	-1.40	82	0.070	100	99	4.1	0.0	235	83	56	81	55	65	344	-0.050	13.52	0.090
326	42.400	44.418	0.13	0.13	1.41	71	-0.65	1.06	71	-1.40	82	0.069	100	99	4.0	0.0	238	83	55	81	55	65	348	-0.050	13.54	0.120
327	42.530	44.554	0.13	0.14	1.43	71	-0.69	1.07	71	-1.20	82	0.069	100	100	4.0	0.0	242	83	55	81	55	66	351	-0.050	13.07	0.120
328	42.661	44.690	0.13	0.14	1.42	71	-0.67	1.06	71	-1.40	82	0.068	101	101	3.9	-0.1	246	83	55	81	55	65	354	-0.050	12.58	0.130
329	42.793	44.825	0.13	0.14	1.42	71	-0.84	1.07	71	-1.30	82	0.068	102	100	3.9	0.0	248	83	55	81	55	64	356	-0.050	12.21	0.140
330	42.923	44.961	0.13	0.14	1.43	71	-0.81	1.07	71	-1.40	83	0.069	100	100	3.8	-0.1	248	83	55	81	55	64	357	-0.050	11.86	0.140
331	43.054	45.097	0.13	0.14	1.42	71	-0.51	1.07	71	-1.30	82	0.068	101	101	3.8	0.0	249	83	55	81	55	65	358	-0.050	11.40	0.140
332	43.185	45.232	0.13	0.13	1.43	71	-0.60	1.06	71	-1.20	83	0.070	100	99	3.8	0.0	249	83	55	81	55	64	358	-0.050	11.07	0.140
333	43.315	45.367	0.13	0.13	1.43	71	-0.50	1.08	71	-1.40	83	0.070	99	99	3.7	0.0	248	83	55	81	55	65	358	-0.050	10.68	0.120
334	43.446	45.503	0.13	0.14	1.42	71	-0.73	1.06	71	-1.20	83	0.068	101	101	3.7	0.0	246	83	55	81	55	64	358	-0.050	10.28	0.100
335	43.577	45.638	0.13	0.13	1.43	71	-0.69	1.07	71	-1.30	82	0.070	100	99	3.7	-0.1	244	83	55	81	55	65	357	-0.050	9.86	0.080
336	43.708	45.774	0.13	0.14	1.43	71	-0.80	1.08	71	-1.30	82	0.068	101	101	3.7	0.0	242	83	55	81	55	66	356	-0.050	9.52	0.060
337	43.839	45.910	0.13	0.14	1.42	71	-0.59	1.07	71	-1.20	82	0.070	100	99	3.6	0.0	240	83	55	81	55	65	354	-0.050	9.24	0.060
338	43.970	46.045	0.13	0.14	1.42	71	-0.65	1.06	71	-1.20	82	0.069	100	99	3.6	-0.1	237	83	55	81	55	64	353	-0.050	8.96	0.050
339	44.100	46.181	0.13	0.14	1.43	71	-0.79	1.07	71	-1.20	82	0.069	100	100	3.6	0.0	235	83	55	81	55	64	351	-0.050	8.79	0.050
340	44.231	46.316	0.13	0.14	1.42	70	-0.59	1.06	71	-1.40	82	0.070	100	99	3.6	0.0	233	83	55	81	55	65	350	-0.050	8.58	0.050
341	44.363	46.451	0.13	0.13	1.41	70	-0.54	1.07	71	-1.20	82	0.069	101	99	3.5	0.0	230	83	55	81	55	65	348	-0.050	8.44	0.050
342	44.493	46.587	0.13	0.14	1.43	70	-0.57	1.08	71	-1.30	81	0.070	99	99	3.5	0.0	227	83	55	81	55	64	346	-0.050	8.31	0.050
343	44.624	46.723	0.13	0.14	1.41	70	-0.56	1.08	71	-1.20	81	0.069	101	100	3.5	-0.1	225	83	55	81	55	65	345	-0.050	8.20	0.050
344	44.755	46.858	0.13	0.13	1.42	70	-0.90	1.06	71	-1.40	81	0.069	101	99	3.5	0.0	222	83	55	81	55	65	343	-0.050	8.15	0.050
345	44.885	46.994	0.13	0.14	1.43	70	-0.88	1.08	71	-1.20	81	0.068	100	101	3.4	0.0	220	83	55	81	55	65	342	-0.040	8.07	0.050
346	45.016	47.130	0.13	0.14	1.42	70	-0.73	1.08	71	-1.30	81	0.069	101	100	3.4	0.0	218	83	55	81	55	65	340	-0.040	8.01	0.050
347	45.147	47.265	0.13	0.13	1.44	70	-0.62	1.07	71	-1.40	80	0.070	100	98	3.4	0.0	217	83	55	80	55	64	339	-0.040	7.88	0.050
348	45.278	47.401	0.13	0.14	1.43	70	-0.76	1.08	71	-1.30	80	0.068	101	101	3.4	0.0	214	83	55	80	55	64	337	-0.040	7.80	0.050
349	45.410	47.537	0.13	0.14	1.42	70	-0.49	1.08	71	-1.40	80	0.070	100	99	3.4	0.0	213	82	55	80	55	65	335	-0.040	7.75	0.050
350	45.540	47.672	0.13	0.13	1.44	70	-0.74	1.07	71	-1.20	80	0.069	100	99	3.3	0.0	210	82	55	81	55	65	334	-0.040	7.70	0.050
351	45.671	47.808	0.13	0.14	1.42	70	-0.67	1.07	71	-1.20	80	0.069	100	100	3.3	0.0	208	82	55	81	55	64	332	-0.040	7.69	0.050
352	45.802	47.943	0.13	0.13	1.43	70	-0.50	1.08	70	-1.40	80	0.068	101	100	3.3	0.0	206	82	55	81	55	64	331	-0.040	7.73	0.050
353	45.933	48.079	0.13	0.14	1.43	70	-0.77	1.07	70	-1.30	80	0.070	100	99	3.3	0.0	204	82	55	81	55	63	330	-0.040	7.70	0.050
354	46.064	48.215	0.13	0.14	1.42	70	-0.49	1.07	70	-1.40	79	0.071	99	99	3.3	0.0	202	82	55	81	55	64	329	-0.040	7.68	0.050
355	46.195	48.350	0.13	0.13	1.43	70	-0.79	1.08	70	-1.30	79	0.069	100	99	3.3	0.0	201	82	55	81	54	64	328	-0.040	7.68	0.050
356	46.326	48.486	0.13	0.14	1.43	70	-0.85	1.07	70	-1.30	79	0.069	100	100	3.3	0.0	200	82	55	81	54	64	327	-0.040	7.66	0.050
357	46.457	48.622	0.13	0.14	1.42	70	-0.89	1.07	70	-1.40	79	0.069	100	100	3.2	0.0	199	82	55	81	54	64	326	-0.040	7.63	0.050
358	46.588	48.757	0.13	0.13	1.43	70	-0.65	1.08	70	-1.30	79	0.069	100	99	3.2	0.0	198	82	55	81	54	63	325	-0.040	7.57	0.050
359	46.718	48.893	0.13	0.14	1.44	70	-0.87	1.07	70	-1.20	79	0.069	100	100	3.2	0.0	196	82	55	81	54	63	324	-0.040	7.51	0.050
360	46.849	49.029	0.13	0.14	1.41	70	-0.56	1.07	70	-1.20	79	0.068	101	101	3.2	0.0	195	82	55	81	54	64	323	-0.040	7.46	0.050
361	46.981	49.163	0.13	0.13	1.42	70	-0.69	1.08	70	-1.40	78	0.070	100	98	3.2	0.0	193	82	55	81	54	63	322	-0.040	7.42	0.050
362	47.111	49.299	0.13	0.14	1.43	70	-0.53	1.07	70	-1.40	78	0.070	99	99	3.2	0.0	192	82	55	81	54	63	322	-0.040	7.40	0.050
363	47.242	49.435	0.13	0.14	1.41	70	-0.77	1.07	70	-1.20	78	0.069	100	100	3.1	0.0	191	82	55	81	54	63	321	-0.040	7.39	0.050
364	47.373	49.570	0.13	0.13	1.41	70	-0.73	1.07	70	-1.20	78	0.069	100	99	3.1	0.0	190	82	55	81	54	64	320	-0.040	7.40	0.050
365	47.504	49.706	0.13	0.14	1.43	70	-0.83	1.07	70	-1.40	78	0.069	100	100	3.1	0.0	189	82	55	81	54	63	319	-0.040	7.40	0.050

Run:	5	Particulate Sampling Data													Fuel Weight (lb)		Temperature Data (°F)							Stack Gas Data		
Elapsed Time (min)	Gas Meter 1 (ft^3)	Gas Meter 2 (ft^3)	Sample Rate 1 (cfm)	Sample Rate 2 (cfm)	Orifice dH 1 ("H_2O)	Meter Temp 1 (°F)	Meter Vacuum 1 ("Hg)	Orifice dH 2 ("H_2O)	Meter Temp 2 (°F)	Meter Vacuum 2 ("Hg)	Dilution Tunnel (°F)	Tunnel Center dP	Pro. Rate 1	Pro. Rate 2	Scale Reading	Weight Change	Stack	Filter 1	Dryer 1	Filter 2	Dryer 2	Ambient	Avg. Surface	Draft ("H_2O)	CO_2 (%)	CO (%)
366	47.635	49.842	0.13	0.14	1.41	70	-0.52	1.08	70	-1.40	78	0.070	100	99	3.1	0.0	187	82	55	81	54	64	319	-0.040	7.43	0.050
367	47.766	49.977	0.13	0.13	1.44	70	-0.69	1.08	70	-1.30	78	0.069	100	99	3.1	0.0	187	82	55	81	54	62	318	-0.040	7.44	0.050
368	47.897	50.113	0.13	0.14	1.42	70	-0.49	1.07	70	-1.20	78	0.070	100	99	3.1	0.0	185	82	55	81	54	63	317	-0.040	7.48	0.050
369	48.028	50.249	0.13	0.14	1.42	70	-0.54	1.08	70	-1.10	78	0.069	100	100	3.1	0.0	184	82	55	81	54	63	317	-0.040	7.56	0.050
370	48.158	50.384	0.13	0.13	1.43	70	-0.81	1.08	70	-1.20	78	0.068	100	100	3.0	0.0	184	81	55	81	54	63	316	-0.040	7.59	0.050
371	48.289	50.520	0.13	0.14	1.42	70	-0.52	1.07	70	-1.20	77	0.070	99	99	3.0	0.0	183	81	55	81	54	64	316	-0.040	7.59	0.050
372	48.421	50.656	0.13	0.14	1.43	70	-0.78	1.07	70	-1.20	77	0.069	101	100	3.0	0.0	182	81	55	81	54	63	315	-0.040	7.66	0.050
373	48.551	50.791	0.13	0.13	1.43	70	-0.87	1.08	70	-1.30	77	0.070	99	98	3.0	0.0	182	81	55	81	54	65	315	-0.040	7.72	0.050
374	48.682	50.927	0.13	0.14	1.42	69	-0.66	1.07	70	-1.30	77	0.069	100	100	3.0	0.0	181	81	55	81	54	64	314	-0.040	7.77	0.050
375	48.814	51.063	0.13	0.14	1.43	70	-0.84	1.08	70	-1.20	77	0.069	101	100	3.0	0.0	180	81	55	82	54	64	314	-0.040	7.77	0.050
376	48.944	51.198	0.13	0.13	1.42	69	-0.48	1.07	70	-1.40	77	0.068	100	100	2.9	0.0	179	81	54	81	54	63	313	-0.040	7.82	0.050
377	49.075	51.334	0.13	0.14	1.41	69	-0.48	1.07	70	-1.10	77	0.069	100	100	2.9	0.0	178	81	55	81	54	63	313	-0.030	7.82	0.050
378	49.207	51.470	0.13	0.14	1.43	69	-0.58	1.07	70	-1.40	77	0.069	101	100	2.9	0.0	178	81	54	81	54	63	312	-0.030	7.87	0.050
379	49.337	51.605	0.13	0.13	1.44	69	-0.48	1.08	70	-1.30	77	0.070	99	98	2.9	0.0	177	81	54	81	54	63	312	-0.030	7.89	0.050
380	49.468	51.741	0.13	0.14	1.41	69	-0.87	1.07	70	-1.30	77	0.069	100	100	2.9	0.0	176	81	54	81	54	63	312	-0.030	7.93	0.050
381	49.600	51.876	0.13	0.13	1.42	69	-0.48	1.08	70	-1.30	76	0.069	101	99	2.9	0.0	176	81	54	81	54	64	311	-0.030	7.95	0.050
382	49.730	52.012	0.13	0.14	1.43	69	-0.67	1.08	70	-1.30	76	0.071	98	98	2.9	0.0	175	81	54	81	54	64	311	-0.030	7.93	0.050
383	49.861	52.148	0.13	0.14	1.41	69	-0.86	1.06	70	-1.30	76	0.070	100	99	2.8	0.0	174	81	54	81	54	63	311	-0.030	7.96	0.050
384	49.992	52.283	0.13	0.13	1.44	69	-0.62	1.07	70	-1.40	76	0.069	100	99	2.9	0.0	173	81	54	81	54	63	310	-0.030	7.99	0.050
385	50.122	52.419	0.13	0.14	1.43	69	-0.69	1.08	69	-1.20	76	0.069	99	100	2.8	0.0	173	81	54	81	54	64	310	-0.030	8.01	0.050
386	50.254	52.555	0.13	0.14	1.41	69	-0.87	1.08	69	-1.40	76	0.070	100	99	2.8	0.0	172	81	54	81	54	63	310	-0.030	8.03	0.050
387	50.384	52.691	0.13	0.14	1.43	69	-0.76	1.07	69	-1.40	76	0.070	99	99	2.8	0.0	172	81	54	81	53	63	310	-0.030	8.01	0.050
388	50.515	52.827	0.13	0.14	1.43	69	-0.53	1.08	69	-1.40	76	0.070	100	99	2.8	-0.1	172	81	54	81	53	63	309	-0.030	8.09	0.050
389	50.647	52.962	0.13	0.14	1.42	69	-0.81	1.08	69	-1.20	76	0.071	100	98	2.8	0.0	172	80	54	81	53	63	309	-0.030	8.07	0.050
390	50.777	53.098	0.13	0.14	1.43	69	-0.70	1.07	69	-1.30	75	0.070	99	99	2.8	0.0	171	80	54	81	53	63	309	-0.030	8.08	0.050
391	50.908	53.234	0.13	0.14	1.42	69	-0.50	1.08	69	-1.10	75	0.070	99	99	2.8	0.0	171	80	54	81	53	64	309	-0.030	8.12	0.050
392	51.039	53.369	0.13	0.13	1.43	69	-0.66	1.08	69	-1.20	75	0.070	99	98	2.7	0.0	170	80	54	81	53	63	309	-0.030	8.21	0.050
393	51.170	53.505	0.13	0.14	1.44	69	-0.71	1.07	69	-1.30	75	0.070	99	99	2.7	0.0	171	80	54	81	53	63	309	-0.030	8.24	0.050
394	51.301	53.641	0.13	0.14	1.42	69	-0.87	1.08	69	-1.20	75	0.069	100	100	2.7	0.0	170	80	54	81	53	63	308	-0.030	8.24	0.050
395	51.432	53.776	0.13	0.14	1.44	69	-0.51	1.08	69	-1.40	75	0.070	99	98	2.7	0.0	170	80	54	81	53	63	308	-0.030	8.20	0.050
396	51.563	53.912	0.13	0.14	1.42	69	-0.83	1.07	69	-1.30	75	0.070	99	99	2.7	0.0	169	80	54	81	53	63	308	-0.030	8.17	0.050
397	51.693	54.048	0.13	0.14	1.42	69	-0.86	1.07	69	-1.10	75	0.071	98	98	2.7	0.0	170	80	54	81	53	63	308	-0.030	8.16	0.050
398	51.825	54.183	0.13	0.13	1.43	69	-0.53	1.08	69	-1.20	75	0.069	101	99	2.7	0.0	170	80	54	81	53	63	308	-0.030	8.14	0.050
399	51.955	54.319	0.13	0.14	1.43	69	-0.68	1.07	69	-1.20	74	0.069	99	100	2.6	0.0	169	80	54	81	53	63	308	-0.030	8.04	0.050
400	52.086	54.455	0.13	0.14	1.42	69	-0.63	1.08	69	-1.40	74	0.069	100	100	2.6	0.0	169	80	54	81	53	63	308	-0.030	7.98	0.050
401	52.218	54.590	0.13	0.14	1.44	69	-0.83	1.08	69	-1.40	75	0.070	100	98	2.6	0.0	169	80	54	81	53	64	308	-0.030	8.04	0.050
402	52.348	54.726	0.13	0.14	1.44	69	-0.53	1.07	69	-1.20	75	0.069	99	100	2.6	0.0	168	80	54	81	53	65	307	-0.030	8.07	0.050
403	52.479	54.862	0.13	0.14	1.41	69	-0.48	1.07	69	-1.40	75	0.070	99	99	2.6	0.0	168	80	54	81	53	64	307	-0.030	8.10	0.050
404	52.610	54.996	0.13	0.13	1.44	69	-0.82	1.08	69	-1.40	74	0.069	100	98	2.6	0.0	168	80	54	81	53	64	307	-0.030	8.13	0.060
405	52.740	55.132	0.13	0.14	1.43	69	-0.49	1.07	69	-1.40	74	0.069	99	100	2.6	0.0	168	80	54	81	53	64	307	-0.030	8.20	0.060
406	52.872	55.268	0.13	0.14	1.41	69	-0.87	1.08	69	-1.30	74	0.071	99	98	2.6	0.0	168	80	54	81	53	65	307	-0.030	8.13	0.060
407	53.002	55.403	0.13	0.13	1.44	69	-0.87	1.08	69	-1.20	74	0.070	99	98	2.5	0.0	168	80	54	81	53	65	307	-0.030	8.20	0.060
408	53.133	55.539	0.13	0.14	1.42	69	-0.82	1.07	69	-1.40	74	0.069	100	100	2.5	0.0	168	80	54	81	53	65	307	-0.030	8.24	0.060
409	53.264	55.675	0.13	0.14	1.41	69	-0.89	1.07	69	-1.30	74	0.070	99	99	2.5	0.0	167	80	54	81	53	64	307	-0.030	8.31	0.060
410	53.394	55.810	0.13	0.14	1.43	69	-0.57	1.08	69	-1.20	74	0.069	99	99	2.5	0.0	166	80	54	81	53	64	307	-0.030	8.27	0.060
411	53.525	55.946	0.13	0.14	1.43	69	-0.83	1.08	69	-1.40	74	0.069	100	100	2.5	0.0	166	80	54	81	53	65	307	-0.030	8.18	0.060
412	53.657	56.082	0.13	0.14	1.42	69	-0.48	1.08	69	-1.40	74	0.069	101	100	2.5	0.0	166	80	54	81	53	64	307	-0.030	8.10	0.060
413	53.787	56.217	0.13	0.13	1.43	69	-0.85	1.07	69	-1.30	74	0.069	99	99	2.5	0.0	166	80	54	81	53	64	307	-0.030	8.16	0.060
414	53.918	56.353	0.13	0.14	1.43	68	-0.89	1.07	69	-1.10	74	0.070	100	99	2.4	-0.1	167	80	54	80	53	65	307	-0.030	7.97	0.060
415	54.049	56.489	0.13	0.14	1.43	68	-0.81	1.08	69	-1.40	74	0.070	100	99	2.4	0.0	167	80	54	80	53	65	306	-0.030	7.85	0.060
416	54.179	56.624	0.13	0.14	1.43	68	-0.53	1.08	69	-1.40	74	0.068	100	100	2.4	0.0	167	80	54	80	53	65	306	-0.030	7.86	0.060
417	54.310	56.760	0.13	0.14	1.42	68	-0.58	1.07	69	-1.20	74	0.069	100	100	2.4	0.0	166	80	54	80	53	65	306	-0.030	7.82	0.060
418	54.441	56.895	0.13	0.14	1.43	68	-0.50	1.08	69	-1.40	74	0.070	100	98	2.4	0.0	166	80	54	80	53	66	306	-0.030	7.80	0.060
419	54.572	57.030	0.13	0.13	1.43	68	-0.48	1.07	69	-1.20	74	0.071	99	98	2.3	0.0	166	80	54	81	53	65	306	-0.030	7.79	0.060

Run:	5	Particulate Sampling Data													Fuel Weight (lb)		Temperature Data (°F)							Stack Gas Data		
Elapsed Time (min)	Gas Meter 1 (ft^3)	Gas Meter 2 (ft^3)	Sample Rate 1 (cfm)	Sample Rate 2 (cfm)	Orifice dH 1 ("H_2O)	Meter Temp 1 (°F)	Meter Vacuum 1 ("Hg)	Orifice dH 2 ("H_2O)	Meter Temp 2 (°F)	Meter Vacuum 2 ("Hg)	Dilution Tunnel (°F)	Tunnel Center dP	Pro. Rate 1	Pro. Rate 2	Scale Reading	Weight Change	Stack	Filter 1	Dryer 1	Filter 2	Dryer 2	Ambient	Avg. Surface	Draft ("H_2O)	CO_2 (%)	CO (%)
420	54.703	57.166	0.13	0.14	1.42	68	-0.80	1.07	69	-1.40	74	0.070	100	99	2.3	0.0	166	80	54	80	53	65	306	-0.030	7.73	0.060
421	54.834	57.302	0.13	0.14	1.42	68	-0.57	1.08	69	-1.20	74	0.070	100	99	2.3	0.0	166	80	54	80	53	65	306	-0.030	7.75	0.060
422	54.964	57.437	0.13	0.13	1.43	68	-0.79	1.08	69	-1.10	75	0.069	100	99	2.3	0.0	167	80	54	80	53	65	306	-0.030	7.77	0.060
423	55.095	57.573	0.13	0.14	1.42	68	-0.48	1.07	69	-1.40	74	0.070	100	99	2.3	0.0	168	80	54	81	53	65	306	-0.030	10.34	0.120
424	55.226	57.709	0.13	0.14	1.42	68	-0.89	1.08	69	-1.20	75	0.070	100	99	2.2	0.0	170	80	54	81	53	65	307	-0.030	11.15	0.130
425	55.356	57.844	0.13	0.13	1.43	68	-0.83	1.07	68	-1.40	75	0.070	99	99	2.2	0.0	173	80	53	81	53	65	308	-0.030	10.82	0.120
426	55.487	57.980	0.13	0.14	1.42	68	-0.89	1.07	68	-1.30	75	0.069	100	100	2.2	0.0	176	80	53	81	53	65	309	-0.030	10.56	0.060
427	55.618	58.115	0.13	0.14	1.41	68	-0.75	1.07	68	-1.30	75	0.069	100	99	2.2	0.0	177	80	53	81	53	65	310	-0.030	10.02	0.050
428	55.748	58.250	0.13	0.13	1.43	68	-0.88	1.07	68	-1.20	75	0.070	99	99	2.2	0.0	178	80	53	81	53	65	310	-0.030	9.73	0.050
429	55.879	58.386	0.13	0.14	1.41	68	-0.53	1.07	68	-1.40	75	0.070	100	99	2.1	0.0	177	80	53	81	53	66	310	-0.030	9.45	0.040
430	56.010	58.521	0.13	0.13	1.41	68	-0.49	1.08	68	-1.30	75	0.070	100	99	2.1	0.0	177	80	53	81	53	66	310	-0.030	9.31	0.040
431	56.140	58.656	0.13	0.13	1.43	68	-0.85	1.08	68	-1.40	75	0.071	98	98	2.1	0.0	176	80	53	81	53	66	310	-0.030	9.16	0.030
432	56.271	58.792	0.13	0.14	1.41	68	-0.89	1.07	68	-1.20	75	0.070	100	99	2.1	0.0	175	80	53	81	53	65	310	-0.030	9.02	0.030
433	56.402	58.927	0.13	0.13	1.41	68	-0.74	1.07	68	-1.40	75	0.070	100	99	2.0	-0.1	175	80	53	81	53	66	310	-0.030	8.93	0.030
434	56.532	59.062	0.13	0.13	1.43	68	-0.57	1.07	68	-1.40	75	0.070	99	99	2.0	0.0	174	80	53	81	53	66	310	-0.030	8.89	0.040
435	56.663	59.198	0.13	0.14	1.41	68	-0.62	1.07	68	-1.20	75	0.070	100	99	2.0	0.0	173	80	53	81	53	65	309	-0.030	8.87	0.040
436	56.794	59.334	0.13	0.14	1.41	68	-0.82	1.07	68	-1.40	75	0.070	100	99	2.0	0.0	172	80	53	81	53	64	309	-0.030	8.83	0.040
437	56.924	59.468	0.13	0.13	1.43	68	-0.76	1.07	68	-1.40	75	0.071	98	97	2.0	0.0	172	80	53	81	53	64	309	-0.030	8.85	0.040
438	57.055	59.604	0.13	0.14	1.41	68	-0.80	1.07	68	-1.20	75	0.070	100	99	2.0	0.0	171	80	53	81	53	65	309	-0.030	8.79	0.040
439	57.186	59.740	0.13	0.14	1.43	68	-0.49	1.08	68	-1.30	75	0.071	99	99	2.0	0.0	170	80	53	81	53	66	309	-0.030	8.80	0.050
440	57.316	59.875	0.13	0.13	1.43	68	-0.77	1.07	68	-1.30	75	0.069	100	99	2.0	0.0	170	80	53	81	53	66	310	-0.030	8.77	0.050
441	57.447	60.010	0.13	0.13	1.41	68	-0.48	1.07	68	-1.30	75	0.070	100	99	1.9	0.0	169	80	53	81	53	66	310	-0.030	8.76	0.050
442	57.577	60.146	0.13	0.14	1.44	68	-0.56	1.07	68	-1.20	75	0.070	99	99	1.9	0.0	169	80	53	80	52	65	310	-0.030	8.75	0.050
443	57.708	60.281	0.13	0.13	1.43	68	-0.64	1.08	68	-1.40	75	0.070	100	99	1.9	0.0	169	80	53	80	52	65	310	-0.030	8.73	0.050
444	57.839	60.417	0.13	0.14	1.41	68	-0.88	1.07	68	-1.30	75	0.070	100	99	1.9	0.0	169	80	53	81	52	65	310	-0.030	9.28	0.050
445	57.969	60.552	0.13	0.13	1.43	68	-0.50	1.07	68	-1.40	75	0.070	99	99	1.9	0.0	169	80	53	81	52	65	310	-0.030	8.89	0.040
446	58.100	60.687	0.13	0.13	1.42	68	-0.84	1.07	68	-1.20	75	0.069	100	99	1.9	0.0	169	80	53	81	52	65	310	-0.030	8.79	0.040
447	58.231	60.823	0.13	0.14	1.41	68	-0.58	1.07	68	-1.40	75	0.069	100	100	1.8	0.0	168	80	53	81	52	64	310	-0.030	8.75	0.040
448	58.361	60.958	0.13	0.13	1.43	68	-0.72	1.08	68	-1.40	75	0.070	99	99	1.8	0.0	168	80	53	81	52	64	310	-0.030	8.75	0.040
449	58.492	61.093	0.13	0.14	1.42	68	-0.87	1.08	68	-1.30	75	0.070	100	99	1.8	0.0	167	80	53	81	52	64	310	-0.030	8.76	0.040
450	58.623	61.229	0.13	0.14	1.41	68	-0.76	1.07	68	-1.20	75	0.070	100	99	1.8	0.0	166	80	53	81	52	64	310	-0.030	8.73	0.040
451	58.753	61.364	0.13	0.13	1.43	68	-0.49	1.07	68	-1.20	75	0.070	99	99	1.8	0.0	166	80	53	82	52	65	310	-0.030	8.70	0.040
452	58.884	61.499	0.13	0.14	1.42	68	-0.85	1.08	68	-1.30	75	0.069	100	99	1.8	0.0	165	80	53	82	52	64	310	-0.030	8.64	0.040
453	59.015	61.635	0.13	0.14	1.43	68	-0.67	1.07	68	-1.40	75	0.070	100	99	1.8	0.0	164	80	53	83	52	64	310	-0.030	8.60	0.040
454	59.145	61.770	0.13	0.14	1.43	68	-0.80	1.07	68	-1.10	75	0.069	100	99	1.7	0.0	164	81	53	83	52	63	310	-0.030	8.59	0.040
455	59.275	61.905	0.13	0.13	1.42	68	-0.84	1.07	68	-1.30	75	0.070	99	99	1.7	0.0	163	81	53	83	52	64	310	-0.030	8.60	0.040
456	59.406	62.041	0.13	0.14	1.43	68	-0.59	1.07	68	-1.40	75	0.069	100	100	1.7	0.0	162	81	53	84	52	65	310	-0.030	8.58	0.040
457	59.536	62.176	0.13	0.14	1.44	68	-0.63	1.07	68	-1.30	75	0.070	99	99	1.7	0.0	161	81	53	84	52	65	310	-0.030	8.50	0.040
458	59.667	62.311	0.13	0.13	1.42	68	-0.81	1.08	68	-1.30	75	0.067	102	101	1.7	0.0	161	81	53	84	52	64	310	-0.030	8.52	0.040
459	59.798	62.446	0.13	0.13	1.43	68	-0.48	1.07	68	-1.40	75	0.070	100	99	1.7	0.0	161	81	53	84	52	65	310	-0.030	8.50	0.040
460	59.928	62.582	0.13	0.14	1.43	68	-0.86	1.07	68	-1.20	75	0.069	100	100	1.7	0.0	160	82	53	84	52	64	310	-0.030	8.54	0.040
461	60.059	62.717	0.13	0.13	1.42	68	-0.49	1.08	68	-1.10	75	0.070	100	99	1.7	0.0	160	82	53	83	52	65	310	-0.030	8.54	0.040
462	60.190	62.852	0.13	0.13	1.42	68	-0.88	1.07	68	-1.40	75	0.069	100	99	1.6	0.0	160	82	53	83	52	66	310	-0.030	8.48	0.040
463	60.319	62.987	0.13	0.14	1.43	68	-0.70	1.07	68	-1.30	75	0.069	99	99	1.6	0.0	159	82	53	83	52	65	310	-0.030	8.48	0.040
464	60.450	63.122	0.13	0.13	1.42	68	-0.49	1.07	68	-1.20	75	0.069	100	99	1.6	0.0	159	82	53	83	52	65	310	-0.030	8.45	0.040
465	60.581	63.257	0.13	0.13	1.42	68	-0.89	1.07	68	-1.40	75	0.068	101	100	1.6	0.0	159	82	53	83	52	66	310	-0.030	8.43	0.050
466	60.711	63.393	0.13	0.14	1.43	68	-0.89	1.07	68	-1.40	75	0.068	100	101	1.6	0.0	159	82	53	83	52	65	310	-0.030	8.42	0.050
467	60.842	63.528	0.13	0.13	1.42	68	-0.77	1.07	68	-1.40	75	0.070	100	99	1.6	0.0	158	83	53	83	52	65	310	-0.030	8.45	0.050
468	60.973	63.663	0.13	0.13	1.42	68	-0.49	1.07	68	-1.40	75	0.070	100	99	1.6	0.0	158	83	53	83	52	65	310	-0.030	8.45	0.050
469	61.102	63.799	0.13	0.14	1.43	68	-0.49	1.08	68	-1.40	75	0.070	98	99	1.6	0.0	158	83	53	83	52	65	310	-0.030	8.38	0.050
470	61.233	63.934	0.13	0.13	1.42	68	-0.88	1.07	68	-1.40	75	0.068	101	100	1.6	0.0	157	83	53	83	52	64	310	-0.030	8.38	0.050
471	61.364	64.069	0.13	0.14	1.42	68	-0.49	1.07	68	-1.40	75	0.069	100	99	1.6	0.0	157	83	53	83	52	65	310	-0.030	8.43	0.050
472	61.494	64.204	0.13	0.13	1.43	68	-0.54	1.07	68	-1.30	75	0.068	100	100	1.5	0.0	158	83	53	83	52	65	310	-0.030	8.47	0.060
473	61.625	64.340	0.13	0.14	1.42	68	-0.76	1.07	68	-1.20	76	0.068	101	101	1.5	0.0	157	83	53	83	52	65	310	-0.030	8.40	0.050

Run:	5	Particulate Sampling Data													Fuel Weight (lb)		Temperature Data (°F)							Stack Gas Data		
Elapsed Time (min)	Gas Meter 1 (ft^3)	Gas Meter 2 (ft^3)	Sample Rate 1 (cfm)	Sample Rate 2 (cfm)	Orifice dH 1 ("H_2O)	Meter Temp 1 (°F)	Meter Vacuum 1 ("Hg)	Orifice dH 2 ("H_2O)	Meter Temp 2 (°F)	Meter Vacuum 2 ("Hg)	Dilution Tunnel (°F)	Tunnel Center dP	Pro. Rate 1	Pro. Rate 2	Scale Reading	Weight Change	Stack	Filter 1	Dryer 1	Filter 2	Dryer 2	Ambient	Avg. Surface	Draft ("H_2O)	CO_2 (%)	CO (%)
474	61.756	64.475	0.13	0.13	1.42	68	-0.61	1.07	68	-1.40	76	0.069	100	99	1.5	0.0	157	83	53	83	52	66	310	-0.030	8.42	0.060
475	61.885	64.610	0.13	0.14	1.43	68	-0.61	1.08	68	-1.30	76	0.069	99	99	1.5	0.0	157	83	53	82	52	65	310	-0.030	8.39	0.060
476	62.016	64.746	0.13	0.14	1.41	68	-0.57	1.06	68	-1.10	75	0.070	100	99	1.5	0.0	157	83	53	82	52	66	310	-0.030	8.37	0.060
477	62.147	64.881	0.13	0.14	1.43	68	-0.62	1.07	68	-1.40	75	0.068	101	100	1.5	0.0	157	83	53	82	52	66	310	-0.030	8.33	0.060
478	62.277	65.016	0.13	0.14	1.43	68	-0.65	1.07	68	-1.20	76	0.069	100	99	1.5	0.0	157	84	53	82	52	66	310	-0.030	8.36	0.060
479	62.408	65.152	0.13	0.14	1.41	68	-0.88	1.07	68	-1.40	76	0.070	100	99	1.5	0.0	157	84	53	82	52	65	310	-0.030	8.31	0.060
480	62.538	65.287	0.13	0.14	1.43	68	-0.49	1.08	68	-1.20	75	0.069	100	99	1.5	0.0	157	84	53	82	52	64	310	-0.030	8.29	0.060
481	62.668	65.422	0.13	0.13	1.43	68	-0.89	1.07	68	-1.40	76	0.068	100	100	1.4	0.0	157	84	53	82	52	65	310	-0.030	8.24	0.060
482	62.799	65.557	0.13	0.14	1.42	68	-0.89	1.07	68	-1.20	75	0.069	100	99	1.4	0.0	156	84	53	82	52	65	310	-0.030	8.24	0.060
483	62.930	65.693	0.13	0.14	1.42	68	-0.53	1.07	68	-1.40	76	0.068	101	101	1.4	0.0	157	84	53	82	52	65	309	-0.030	8.17	0.060
484	63.060	65.828	0.13	0.14	1.43	68	-0.70	1.07	68	-1.40	76	0.069	100	99	1.4	0.0	156	84	53	82	52	66	309	-0.030	8.17	0.060
485	63.190	65.963	0.13	0.13	1.42	68	-0.78	1.07	68	-1.30	76	0.070	99	99	1.4	0.0	156	84	53	82	52	66	309	-0.030	8.17	0.060
486	63.321	66.099	0.13	0.14	1.42	68	-0.58	1.07	68	-1.30	76	0.069	100	100	1.4	0.0	156	84	53	82	52	66	309	-0.030	8.17	0.060
487	63.451	66.233	0.13	0.13	1.43	68	-0.72	1.07	68	-1.40	75	0.069	100	99	1.4	0.0	156	84	53	82	52	65	309	-0.030	8.11	0.060
488	63.582	66.369	0.13	0.14	1.42	68	-0.75	1.07	68	-1.10	76	0.069	100	100	1.4	0.0	156	84	53	82	52	65	309	-0.030	8.10	0.060
489	63.713	66.505	0.13	0.14	1.42	68	-0.48	1.07	68	-1.30	76	0.070	100	99	1.3	-0.1	157	84	53	82	52	66	309	-0.030	8.12	0.060
490	63.843	66.639	0.13	0.13	1.43	68	-0.79	1.07	68	-1.30	76	0.069	100	99	1.3	0.0	156	84	53	82	52	65	309	-0.030	8.08	0.060
491	63.973	66.775	0.13	0.14	1.42	68	-0.55	1.07	68	-1.10	76	0.068	100	101	1.3	0.0	156	84	53	82	52	65	308	-0.030	8.09	0.060
492	64.104	66.910	0.13	0.13	1.41	68	-0.73	1.07	68	-1.20	75	0.070	100	99	1.3	0.0	156	84	53	82	52	65	308	-0.030	8.03	0.060
493	64.234	67.045	0.13	0.14	1.43	68	-0.84	1.08	68	-1.40	76	0.069	100	99	1.3	0.0	155	84	53	82	52	65	308	-0.030	8.01	0.060
494	64.364	67.181	0.13	0.14	1.42	68	-0.82	1.07	68	-1.30	76	0.069	100	100	1.3	0.0	156	84	53	82	52	65	308	-0.030	7.98	0.060
495	64.495	67.316	0.13	0.14	1.41	68	-0.54	1.07	68	-1.20	76	0.069	100	99	1.3	0.0	156	84	53	82	52	66	308	-0.030	7.98	0.060
496	64.625	67.451	0.13	0.13	1.43	68	-0.70	1.08	68	-1.40	75	0.070	99	99	1.3	0.0	156	84	53	82	52	65	308	-0.030	7.94	0.060
497	64.756	67.586	0.13	0.14	1.42	68	-0.87	1.07	68	-1.10	76	0.069	100	99	1.2	0.0	155	84	53	82	52	64	307	-0.030	7.95	0.060
498	64.887	67.722	0.13	0.14	1.40	68	-0.49	1.07	68	-1.40	75	0.069	100	100	1.2	0.0	155	84	53	82	52	64	307	-0.030	7.94	0.060
499	65.017	67.857	0.13	0.14	1.43	68	-0.48	1.07	68	-1.30	76	0.071	98	98	1.2	0.0	155	84	53	82	52	64	307	-0.030	7.93	0.060
500	65.147	67.992	0.13	0.14	1.42	68	-0.56	1.06	68	-1.30	76	0.069	100	99	1.2	0.0	155	85	53	82	52	65	307	-0.030	7.90	0.060
501	65.278	68.128	0.13	0.14	1.42	68	-0.88	1.07	68	-1.30	75	0.070	100	99	1.2	0.0	154	85	53	82	52	65	307	-0.030	7.97	0.050
502	65.408	68.262	0.13	0.13	1.43	68	-0.73	1.07	68	-1.10	76	0.069	100	99	1.2	0.0	155	85	53	82	52	65	306	-0.030	8.38	0.060
503	65.538	68.397	0.13	0.14	1.42	68	-0.71	1.06	68	-1.20	76	0.069	100	99	1.2	0.0	154	85	53	82	52	66	306	-0.030	8.50	0.060
504	65.669	68.533	0.13	0.14	1.42	68	-0.79	1.07	68	-1.20	75	0.070	100	99	1.1	0.0	154	85	53	82	52	66	306	-0.030	8.55	0.060
505	65.799	68.668	0.13	0.14	1.43	68	-0.51	1.08	68	-1.20	75	0.070	99	99	1.1	0.0	155	85	53	82	52	64	306	-0.030	8.56	0.060
506	65.929	68.803	0.13	0.13	1.42	68	-0.88	1.07	68	-1.20	75	0.068	100	100	1.1	0.0	155	85	53	82	52	64	306	-0.030	8.53	0.060
507	66.060	68.938	0.13	0.14	1.41	68	-0.53	1.08	68	-1.20	75	0.068	101	100	1.1	0.0	155	85	53	82	52	65	306	-0.030	8.54	0.060
508	66.190	69.074	0.13	0.14	1.43	68	-0.60	1.06	68	-1.40	75	0.069	100	100	1.1	0.0	155	85	53	82	52	65	306	-0.030	8.54	0.050
509	66.321	69.209	0.13	0.14	1.43	68	-0.88	1.07	68	-1.40	75	0.068	101	100	1.1	0.0	154	85	53	82	52	64	305	-0.030	8.48	0.050
510	66.451	69.344	0.13	0.13	1.41	68	-0.49	1.08	68	-1.40	75	0.069	100	99	1.1	0.0	154	85	53	82	52	64	305	-0.030	8.55	0.050
511	66.582	69.480	0.13	0.14	1.43	68	-0.49	1.07	68	-1.40	75	0.070	100	99	1.1	0.0	154	85	53	82	52	65	305	-0.030	8.51	0.050
512	66.712	69.615	0.13	0.13	1.42	68	-0.71	1.07	68	-1.40	75	0.068	100	100	1.1	0.0	154	85	53	82	52	64	304	-0.030	8.50	0.050
513	66.843	69.750	0.13	0.14	1.40	68	-0.51	1.08	68	-1.30	75	0.068	101	100	1.1	0.0	154	85	53	82	52	63	304	-0.030	8.44	0.050
514	66.973	69.886	0.13	0.14	1.43	68	-0.63	1.07	68	-1.10	75	0.070	99	99	1.0	0.0	154	84	53	82	52	64	304	-0.030	8.39	0.050
515	67.103	70.021	0.13	0.14	1.42	68	-0.51	1.08	68	-1.40	75	0.070	99	99	1.0	0.0	154	84	53	82	52	64	304	-0.030	8.33	0.050
516	67.234	70.156	0.13	0.14	1.41	68	-0.70	1.07	68	-1.30	75	0.069	100	99	1.0	0.0	153	85	53	82	52	64	304	-0.030	8.17	0.050
517	67.365	70.292	0.13	0.14	1.43	68	-0.49	1.07	68	-1.20	75	0.067	102	101	1.0	0.0	154	85	53	82	52	64	304	-0.030	7.96	0.050
518	67.495	70.427	0.13	0.14	1.42	68	-0.57	1.07	68	-1.20	75	0.068	100	100	1.0	0.0	154	85	53	82	52	64	304	-0.030	7.85	0.050
519	67.625	70.562	0.13	0.13	1.41	68	-0.53	1.08	68	-1.40	75	0.070	99	99	1.0	0.0	154	85	53	82	52	62	303	-0.030	7.88	0.050
520	67.756	70.697	0.13	0.14	1.44	68	-0.86	1.07	68	-1.30	75	0.069	100	99	1.0	0.0	154	85	53	82	52	64	303	-0.030	7.82	0.050
521	67.886	70.833	0.13	0.14	1.42	68	-0.70	1.07	68	-1.20	75	0.070	99	99	1.0	0.0	154	85	53	82	52	64	303	-0.030	7.84	0.050
522	68.017	70.968	0.13	0.14	1.42	68	-0.83	1.07	68	-1.20	75	0.069	100	99	1.0	0.0	154	85	53	82	52	64	303	-0.030	7.78	0.050
523	68.148	71.103	0.13	0.13	1.44	68	-0.75	1.07	68	-1.40	75	0.071	99	98	1.0	0.0	154	85	53	82	52	64	303	-0.030	7.75	0.050
524	68.278	71.239	0.13	0.14	1.43	68	-0.62	1.08	68	-1.40	75	0.069	100	100	1.0	0.0	153	84	53	82	52	64	302	-0.030	7.73	0.050
525	68.409	71.374	0.13	0.13	1.42	68	-0.68	1.08	68	-1.20	75	0.069	100	99	0.9	0.0	153	85	53	82	52	63	302	-0.030	7.79	0.050
526	68.539	71.510	0.13	0.14	1.44	68	-0.57	1.08	68	-1.20	75	0.069	100	100	0.9	0.0	153	85	53	82	52	63	302	-0.030	7.75	0.050
527	68.670	71.646	0.13	0.14	1.42	68	-0.51	1.08	68	-1.40	75	0.070	100	99	0.9	0.0	153	84	52	82	52	62	301	-0.030	7.73	0.050

Run:	5	Particulate Sampling Data													Fuel Weight (lb)		Temperature Data (°F)							Stack Gas Data		
Elapsed Time (min)	Gas Meter 1 (ft^3)	Gas Meter 2 (ft^3)	Sample Rate 1 (cfm)	Sample Rate 2 (cfm)	Orifice dH 1 ("H_2O)	Meter Temp 1 (°F)	Meter Vacuum 1 ("Hg)	Orifice dH 2 ("H_2O)	Meter Temp 2 (°F)	Meter Vacuum 2 ("Hg)	Dilution Tunnel (°F)	Tunnel Center dP	Pro. Rate 1	Pro. Rate 2	Scale Reading	Weight Change	Stack	Filter 1	Dryer 1	Filter 2	Dryer 2	Ambient	Avg. Surface	Draft ("H_2O)	CO_2 (%)	CO (%)
528	68.801	71.781	0.13	0.14	1.42	68	-0.74	1.08	68	-1.40	74	0.069	100	99	0.9	0.0	153	84	52	82	52	64	301	-0.030	7.70	0.050
529	68.932	71.917	0.13	0.14	1.44	68	-0.75	1.08	68	-1.40	75	0.069	100	100	0.9	0.0	153	84	52	82	52	64	301	-0.030	7.70	0.050
530	69.062	72.052	0.13	0.14	1.42	68	-0.89	1.08	68	-1.30	74	0.069	99	99	0.9	0.0	153	84	52	82	52	64	300	-0.030	7.66	0.050
531	69.193	72.187	0.13	0.13	1.42	68	-0.88	1.07	68	-1.20	74	0.069	100	99	0.9	0.0	153	84	52	82	52	63	300	-0.030	7.65	0.050
532	69.323	72.324	0.13	0.14	1.43	68	-0.58	1.07	68	-1.40	74	0.069	99	101	0.9	0.0	153	84	52	82	52	64	299	-0.030	7.66	0.050
533	69.454	72.459	0.13	0.14	1.42	68	-0.57	1.07	68	-1.20	74	0.069	100	99	0.8	0.0	152	84	52	81	52	64	299	-0.030	7.59	0.050
534	69.585	72.594	0.13	0.13	1.42	68	-0.83	1.08	68	-1.40	74	0.069	100	99	0.8	0.0	153	84	52	82	52	64	299	-0.030	7.58	0.050
535	69.715	72.730	0.13	0.14	1.43	68	-0.88	1.07	68	-1.20	74	0.070	99	99	0.8	0.0	152	84	52	81	52	64	298	-0.030	7.58	0.050
536	69.846	72.865	0.13	0.13	1.42	68	-0.68	1.08	68	-1.20	74	0.069	100	99	0.8	0.0	153	84	52	81	52	63	298	-0.030	7.56	0.050
537	69.977	73.000	0.13	0.14	1.42	68	-0.48	1.08	68	-1.20	74	0.069	100	99	0.8	0.0	152	84	52	81	52	63	298	-0.030	7.49	0.050
538	70.107	73.136	0.13	0.14	1.43	68	-0.76	1.07	68	-1.40	74	0.069	99	100	0.8	0.0	152	84	52	81	52	64	297	-0.030	7.50	0.050
539	70.237	73.271	0.13	0.14	1.43	68	-0.69	1.07	68	-1.10	74	0.069	99	99	0.8	0.0	152	84	52	81	52	63	297	-0.030	7.51	0.050
540	70.369	73.407	0.13	0.14	1.42	68	-0.80	1.08	68	-1.20	74	0.069	101	100	0.8	0.0	153	84	52	81	52	64	296	-0.030	7.52	0.050
541	70.499	73.542	0.13	0.14	1.43	68	-0.89	1.06	68	-1.40	74	0.068	100	100	0.7	0.0	152	84	52	81	52	63	296	-0.030	7.47	0.050
542	70.629	73.678	0.13	0.14	1.43	68	-0.71	1.08	68	-1.10	74	0.069	99	100	0.7	0.0	152	84	52	81	52	64	296	-0.030	7.48	0.050
543	70.760	73.813	0.13	0.14	1.43	68	-0.51	1.08	68	-1.20	74	0.070	100	98	0.7	0.0	152	84	52	81	52	63	295	-0.030	7.47	0.050
544	70.890	73.949	0.13	0.14	1.43	68	-0.66	1.07	68	-1.10	74	0.070	99	99	0.7	0.0	152	84	52	82	52	63	295	-0.030	7.49	0.050
545	71.021	74.084	0.13	0.14	1.43	68	-0.52	1.08	68	-1.20	74	0.070	100	98	0.7	0.0	152	84	52	82	52	64	295	-0.030	7.46	0.050
546	71.152	74.219	0.13	0.13	1.43	68	-0.80	1.07	68	-1.30	74	0.070	100	98	0.7	0.0	153	84	52	82	52	63	294	-0.030	7.47	0.050
547	71.282	74.355	0.13	0.14	1.43	68	-0.56	1.07	68	-1.40	74	0.070	99	99	0.7	0.0	152	84	52	82	52	63	294	-0.030	7.47	0.050
548	71.413	74.490	0.13	0.13	1.43	68	-0.89	1.07	68	-1.20	74	0.070	100	98	0.7	0.0	152	84	52	82	52	63	294	-0.030	7.48	0.050
549	71.544	74.625	0.13	0.14	1.43	68	-0.57	1.07	68	-1.30	74	0.068	101	100	0.7	0.0	153	84	52	82	52	63	293	-0.030	7.44	0.050
550	71.673	74.761	0.13	0.14	1.43	68	-0.89	1.07	68	-1.30	74	0.070	98	99	0.7	0.0	154	84	52	82	52	62	293	-0.030	7.35	0.050
551	71.804	74.896	0.13	0.14	1.42	68	-0.71	1.08	68	-1.40	74	0.069	100	99	0.7	0.0	154	84	52	83	52	63	293	-0.030	7.38	0.050
552	71.935	75.031	0.13	0.14	1.43	68	-0.88	1.08	68	-1.10	74	0.070	100	98	0.7	0.0	154	84	52	83	52	62	292	-0.030	7.34	0.050
553	72.065	75.167	0.13	0.14	1.42	68	-0.59	1.07	68	-1.40	74	0.070	99	99	0.6	0.0	155	84	52	83	52	63	292	-0.030	7.34	0.050
554	72.196	75.303	0.13	0.14	1.42	68	-0.86	1.08	68	-1.40	74	0.070	100	99	0.6	0.0	155	84	52	83	52	63	292	-0.030	7.32	0.050
555	72.327	75.437	0.13	0.13	1.43	68	-0.85	1.07	68	-1.20	73	0.070	99	98	0.6	-0.1	155	84	52	83	52	63	291	-0.030	7.33	0.050
556	72.457	75.573	0.13	0.14	1.43	68	-0.86	1.07	68	-1.10	73	0.070	99	99	0.6	0.0	155	84	52	83	52	64	291	-0.030	7.23	0.050
557	72.587	75.709	0.13	0.14	1.42	67	-0.54	1.07	68	-1.30	73	0.070	99	99	0.6	0.0	155	84	52	83	52	62	291	-0.030	7.25	0.050
558	72.719	75.843	0.13	0.13	1.43	67	-0.50	1.08	68	-1.10	73	0.068	102	99	0.6	0.0	155	84	52	83	52	63	291	-0.030	7.23	0.050
559	72.849	75.979	0.13	0.14	1.43	67	-0.58	1.07	68	-1.10	73	0.070	99	99	0.6	0.0	156	84	52	83	52	63	290	-0.030	7.24	0.050
560	72.979	76.115	0.13	0.14	1.42	67	-0.87	1.08	68	-1.20	74	0.069	100	100	0.6	0.0	156	84	52	83	52	62	290	-0.030	7.19	0.050
561	73.110	76.249	0.13	0.13	1.43	67	-0.53	1.07	68	-1.20	73	0.069	100	98	0.5	0.0	156	84	52	83	52	64	290	-0.030	7.18	0.050
562	73.240	76.385	0.13	0.14	1.43	67	-0.48	1.07	68	-1.20	73	0.070	99	99	0.5	0.0	156	84	52	83	52	63	290	-0.030	7.18	0.050
563	73.371	76.521	0.13	0.14	1.42	67	-0.88	1.07	68	-1.40	73	0.069	100	100	0.5	0.0	156	84	52	83	52	63	290	-0.030	7.16	0.050
564	73.502	76.655	0.13	0.13	1.43	67	-0.69	1.08	68	-1.30	74	0.070	100	98	0.5	0.0	156	84	52	84	52	63	289	-0.030	7.18	0.050
565	73.632	76.791	0.13	0.14	1.43	67	-0.49	1.07	67	-1.40	74	0.070	99	99	0.5	0.0	156	84	52	84	52	62	289	-0.030	7.15	0.050
566	73.762	76.926	0.13	0.14	1.42	67	-0.75	1.07	67	-1.40	74	0.070	99	99	0.5	0.0	156	84	52	84	52	63	289	-0.030	7.08	0.050
567	73.893	77.061	0.13	0.14	1.42	67	-0.83	1.08	67	-1.30	74	0.070	100	99	0.5	0.0	156	84	52	84	52	63	289	-0.030	6.89	0.050
568	74.023	77.197	0.13	0.14	1.43	67	-0.69	1.07	67	-1.10	74	0.070	99	99	0.5	0.0	156	84	52	84	52	63	288	-0.030	6.81	0.050
569	74.154	77.332	0.13	0.13	1.42	67	-0.66	1.07	67	-1.30	74	0.070	100	99	0.5	0.0	156	84	52	84	52	63	288	-0.030	6.83	0.050
570	74.285	77.467	0.13	0.14	1.43	67	-0.57	1.07	67	-1.40	74	0.070	100	99	0.5	0.0	156	84	52	84	52	63	288	-0.030	6.81	0.050
571	74.415	77.602	0.13	0.14	1.43	67	-0.83	1.06	67	-1.10	74	0.070	99	99	0.5	0.0	156	84	52	84	52	63	288	-0.030	6.80	0.050
572	74.545	77.738	0.13	0.14	1.43	67	-0.88	1.08	67	-1.20	74	0.069	100	100	0.5	0.0	156	84	52	84	52	64	287	-0.030	6.76	0.050
573	74.676	77.873	0.13	0.14	1.43	67	-0.76	1.08	67	-1.20	74	0.070	100	99	0.4	0.0	156	84	52	84	52	63	287	-0.030	6.75	0.050
574	74.806	78.008	0.13	0.13	1.43	67	-0.53	1.07	67	-1.20	74	0.071	98	98	0.4	0.0	156	84	52	84	52	64	286	-0.030	6.74	0.050
575	74.937	78.144	0.13	0.14	1.42	67	-0.48	1.07	67	-1.30	74	0.070	100	99	0.4	0.0	155	83	52	84	52	63	286	-0.030	6.79	0.050
576	75.068	78.279	0.13	0.13	1.43	67	-0.48	1.08	67	-1.40	74	0.070	100	99	0.4	0.0	155	83	52	84	52	63	286	-0.030	6.79	0.060
577	75.197	78.414	0.13	0.14	1.42	67	-0.56	1.07	67	-1.10	74	0.069	99	99	0.4	0.0	155	83	52	84	52	64	286	-0.030	6.42	0.050
578	75.328	78.550	0.13	0.14	1.42	67	-0.71	1.07	67	-1.30	74	0.070	100	99	0.4	0.0	155	83	52	84	52	64	285	-0.030	6.10	0.050
579	75.459	78.685	0.13	0.14	1.43	67	-0.74	1.07	67	-1.30	74	0.070	100	99	0.4	0.0	155	83	52	84	52	64	285	-0.030	5.89	0.050
580	75.589	78.820	0.13	0.13	1.43	67	-0.89	1.07	67	-1.20	74	0.070	99	99	0.4	0.0	155	83	52	84	52	64	284	-0.030	5.86	0.050
581	75.719	78.955	0.13	0.14	1.42	67	-0.66	1.08	67	-1.40	74	0.070	99	99	0.4	0.0	154	83	52	84	52	64	284	-0.030	5.83	0.050

Run:	5	Particulate Sampling Data													Fuel Weight (lb)		Temperature Data (°F)							Stack Gas Data		
Elapsed Time (min)	Gas Meter 1 (ft^3)	Gas Meter 2 (ft^3)	Sample Rate 1 (cfm)	Sample Rate 2 (cfm)	Orifice dH 1 ("H_2O)	Meter Temp 1 (°F)	Meter Vacuum 1 ("Hg)	Orifice dH 2 ("H_2O)	Meter Temp 2 (°F)	Meter Vacuum 2 ("Hg)	Dilution Tunnel (°F)	Tunnel Center dP	Pro. Rate 1	Pro. Rate 2	Scale Reading	Weight Change	Stack	Filter 1	Dryer 1	Filter 2	Dryer 2	Ambient	Avg. Surface	Draft ("H_2O)	CO_2 (%)	CO (%)
582	75.850	79.091	0.13	0.14	1.43	67	-0.76	1.07	67	-1.10	74	0.070	100	99	0.3	0.0	154	83	52	84	52	63	283	-0.030	5.77	0.050
583	75.980	79.226	0.13	0.14	1.43	67	-0.49	1.06	67	-1.40	74	0.070	99	99	0.3	0.0	154	83	52	84	52	64	283	-0.030	5.73	0.050
584	76.111	79.361	0.13	0.14	1.42	67	-0.49	1.07	67	-1.40	74	0.070	100	99	0.3	0.0	154	84	52	84	52	63	282	-0.030	5.71	0.050
585	76.242	79.497	0.13	0.14	1.43	67	-0.85	1.07	67	-1.40	74	0.070	100	99	0.3	0.0	153	84	52	84	52	64	281	-0.030	5.68	0.050
586	76.372	79.632	0.13	0.14	1.43	67	-0.61	1.08	67	-1.40	74	0.070	99	99	0.3	0.0	152	84	52	85	52	63	281	-0.030	5.66	0.050
587	76.503	79.767	0.13	0.13	1.42	67	-0.84	1.08	67	-1.20	74	0.070	100	99	0.3	0.0	152	84	52	85	52	64	280	-0.030	5.61	0.050
588	76.634	79.903	0.13	0.14	1.42	67	-0.85	1.06	67	-1.20	74	0.069	100	100	0.3	0.0	152	84	52	85	52	64	279	-0.030	5.65	0.050
589	76.764	80.038	0.13	0.13	1.43	67	-0.82	1.07	67	-1.30	74	0.069	100	99	0.3	0.0	152	84	52	85	52	65	279	-0.030	5.58	0.050
590	76.894	80.173	0.13	0.14	1.42	67	-0.89	1.07	67	-1.30	74	0.070	99	99	0.3	0.0	152	84	52	85	52	65	278	-0.030	5.55	0.050
591	77.025	80.309	0.13	0.14	1.42	67	-0.78	1.07	67	-1.10	74	0.071	99	99	0.3	0.0	152	84	52	85	52	64	277	-0.030	5.50	0.050
592	77.155	80.444	0.13	0.14	1.43	67	-0.72	1.08	67	-1.30	74	0.070	99	99	0.3	0.0	152	84	52	85	52	63	277	-0.030	5.47	0.050
593	77.286	80.579	0.13	0.13	1.42	67	-0.87	1.07	67	-1.30	74	0.072	98	97	0.3	0.0	151	84	52	85	51	64	276	-0.030	5.44	0.050
594	77.416	80.714	0.13	0.14	1.43	67	-0.74	1.07	67	-1.30	74	0.069	100	99	0.2	0.0	151	84	52	85	52	64	275	-0.030	5.44	0.050
595	77.546	80.849	0.13	0.14	1.43	67	-0.69	1.07	67	-1.40	74	0.069	100	99	0.2	0.0	151	84	52	85	52	65	275	-0.030	5.46	0.050
596	77.677	80.984	0.13	0.13	1.42	67	-0.48	1.07	67	-1.40	74	0.069	100	99	0.2	0.0	150	84	52	85	52	66	274	-0.030	5.43	0.050
597	77.808	81.119	0.13	0.14	1.43	67	-0.49	1.07	67	-1.30	74	0.069	100	99	0.2	0.0	150	84	52	85	52	65	273	-0.030	5.44	0.050
598	77.938	81.255	0.13	0.14	1.43	67	-0.51	1.07	67	-1.20	74	0.070	99	99	0.2	0.0	150	84	52	85	52	64	273	-0.030	5.40	0.050
599	78.068	81.389	0.13	0.13	1.41	67	-0.64	1.07	67	-1.20	74	0.069	100	99	0.2	0.0	150	84	52	85	52	65	272	-0.030	5.41	0.050
600	78.199	81.525	0.13	0.14	1.43	67	-0.89	1.07	67	-1.20	74	0.071	99	99	0.2	0.0	149	84	52	85	52	65	271	-0.030	5.38	0.050
601	78.329	81.660	0.13	0.13	1.43	67	-0.48	1.07	67	-1.40	74	0.071	98	98	0.2	0.0	149	84	52	85	52	64	270	-0.030	5.37	0.050
602	78.460	81.795	0.13	0.14	1.42	67	-0.53	1.07	67	-1.20	74	0.070	100	99	0.2	0.0	149	84	52	85	52	64	270	-0.030	5.35	0.050
603	78.590	81.930	0.13	0.14	1.43	67	-0.54	1.07	67	-1.20	74	0.070	99	99	0.2	0.0	148	84	52	85	52	64	269	-0.030	5.33	0.050
604	78.720	82.066	0.13	0.14	1.43	67	-0.70	1.07	67	-1.30	74	0.071	98	99	0.2	0.0	148	84	52	85	52	64	268	-0.030	5.33	0.050
605	78.851	82.200	0.13	0.13	1.42	67	-0.85	1.07	67	-1.40	74	0.070	100	98	0.2	0.0	148	84	52	85	52	63	268	-0.030	5.11	0.050
606	78.981	82.336	0.13	0.14	1.42	67	-0.58	1.06	67	-1.10	74	0.069	100	100	0.1	0.0	148	84	52	85	52	64	267	-0.030	5.02	0.050
607	79.111	82.471	0.13	0.14	1.43	67	-0.89	1.07	67	-1.30	74	0.070	99	99	0.1	0.0	147	84	52	85	52	64	266	-0.030	5.01	0.050
608	79.242	82.606	0.13	0.13	1.42	67	-0.60	1.08	67	-1.40	74	0.068	101	100	0.1	0.0	147	84	52	85	52	64	266	-0.030	4.98	0.050
609	79.373	82.741	0.13	0.14	1.42	67	-0.88	1.06	67	-1.40	74	0.071	99	98	0.1	0.0	147	84	52	85	52	65	265	-0.030	4.94	0.050
610	79.503	82.876	0.13	0.14	1.43	67	-0.83	1.07	67	-1.30	74	0.070	99	99	0.1	0.0	146	84	52	85	52	65	264	-0.030	4.91	0.050
611	79.633	83.012	0.13	0.14	1.42	67	-0.65	1.08	67	-1.40	74	0.069	100	100	0.1	0.0	146	84	52	85	52	66	264	-0.030	4.88	0.050
612	79.764	83.147	0.13	0.14	1.41	67	-0.78	1.07	67	-1.40	75	0.069	101	99	0.1	0.0	146	84	52	85	52	64	263	-0.030	4.84	0.050
613	79.894	83.282	0.13	0.13	1.43	67	-0.87	1.08	67	-1.30	74	0.069	100	99	0.1	0.0	146	84	52	85	52	65	262	-0.030	4.82	0.050
614	80.024	83.417	0.13	0.14	1.41	67	-0.52	1.06	67	-1.40	74	0.070	99	99	0.1	0.0	146	84	52	85	52	63	262	-0.030	4.80	0.050
615	80.155	83.552	0.13	0.14	1.41	67	-0.89	1.07	67	-1.30	74	0.070	100	99	0.1	0.0	145	84	52	85	52	65	261	-0.030	4.79	0.050
616	80.285	83.687	0.13	0.13	1.43	67	-0.56	1.08	67	-1.20	74	0.069	100	99	0.1	0.0	145	84	52	85	52	64	260	-0.030	4.75	0.050
617	80.416	83.823	0.13	0.14	1.42	67	-0.78	1.06	67	-1.20	74	0.070	100	99	0.1	0.0	144	84	52	85	52	64	259	-0.030	4.68	0.050
618	80.546	83.958	0.13	0.14	1.42	67	-0.86	1.07	67	-1.30	75	0.070	99	99	0.1	0.0	144	84	52	85	52	65	259	-0.030	4.69	0.050
619	80.677	84.093	0.13	0.14	1.43	67	-0.75	1.07	67	-1.40	74	0.070	100	99	0.1	0.0	144	84	52	85	52	65	258	-0.030	4.65	0.050
620	80.807	84.228	0.13	0.13	1.42	67	-0.55	1.07	67	-1.20	74	0.069	100	99	0.1	0.0	143	84	52	85	52	64	257	-0.030	4.62	0.050
621	80.938	84.363	0.13	0.14	1.42	67	-0.83	1.08	67	-1.10	74	0.069	100	99	0.0	0.0	143	84	52	85	52	65	257	-0.030	4.62	0.060
622	81.068	84.498	0.13	0.14	1.43	67	-0.51	1.07	67	-1.10	74	0.070	99	99	0.0	0.0	143	84	52	85	52	64	256	-0.030	4.55	0.060
623	81.198	84.634	0.13	0.14	1.42	67	-0.70	1.07	67	-1.30	74	0.070	99	99	0.0	0.0	142	84	52	85	52	64	255	-0.030	4.53	0.060
624	81.329	84.769	0.13	0.14	1.42	67	-0.81	1.08	67	-1.30	74	0.069	100	99	0.0	0.0	142	84	52	85	52	65	254	-0.030	4.49	0.050
625	81.459	84.904	0.13	0.13	1.43	67	-0.89	1.07	67	-1.30	74	0.069	100	99	0.0	0.0	142	84	52	85	52	64	254	-0.030	4.47	0.050
626	81.589	85.039	0.13	0.14	1.42	67	-0.87	1.07	67	-1.40	74	0.070	99	99	0.0	0.0	142	84	52	85	52	65	253	-0.030	4.40	0.060
627	81.720	85.175	0.13	0.14	1.41	67	-0.48	1.07	67	-1.10	74	0.071	99	99	0.0	0.0	141	84	52	85	52	65	252	-0.030	4.38	0.060
628	81.851	85.309	0.13	0.13	1.43	67	-0.87	1.08	67	-1.20	74	0.070	100	98	0.0	0.0	141	84	52	85	52	65	251	-0.030	4.36	0.060
629	81.981	85.445	0.13	0.14	1.43	67	-0.49	1.07	67	-1.40	74	0.070	99	99	0.0	0.0	140	84	52	85	52	64	251	-0.030	4.33	0.050
630	82.111	85.581	0.13	0.14	1.41	67	-0.87	1.07	67	-1.40	74	0.070	99	99	0.0	0.0	140	84	52	85	52	64	250	-0.030	4.30	0.050
631	82.242	85.715	0.13	0.13	1.43	67	-0.52	1.07	67	-1.30	74	0.071	99	97	0.0	0.0	140	84	52	85	52	64	249	-0.030	4.24	0.050
632	82.372	85.851	0.13	0.14	1.42	67	-0.53	1.06	67	-1.30	74	0.068	100	101	0.0	0.0	140	84	52	85	52	64	248	-0.030	4.20	0.060
633	82.503	85.986	0.13	0.14	1.41	67	-0.89	1.07	67	-1.30	74	0.070	100	99	0.0	0.0	139	84	52	85	52	64	248	-0.030	4.18	0.070
634	82.633	86.121	0.13	0.13	1.43	67	-0.55	1.08	67	-1.40	74	0.070	99	99	0.0	0.0	140	84	52	85	52	65	247	-0.030	4.17	0.070
635	82.763	86.256	0.13	0.14	1.42	67	-0.89	1.07	67	-1.20	74	0.070	99	99	0.0	0.0	140	84	52	85	52	64	246	-0.030	4.11	0.080

Run:	5	Particulate Sampling Data													Fuel Weight (lb)		Temperature Data (°F)							Stack Gas Data		
Elapsed Time (min)	Gas Meter 1 (ft^3)	Gas Meter 2 (ft^3)	Sample Rate 1 (cfm)	Sample Rate 2 (cfm)	Orifice dH 1 ("H_2O)	Meter Temp 1 (°F)	Meter Vacuum 1 ("Hg)	Orifice dH 2 ("H_2O)	Meter Temp 2 (°F)	Meter Vacuum 2 ("Hg)	Dilution Tunnel (°F)	Tunnel Center dP	Pro. Rate 1	Pro. Rate 2	Scale Reading	Weight Change	Stack	Filter 1	Dryer 1	Filter 2	Dryer 2	Ambient	Avg. Surface	Draft ("H_2O)	CO_2 (%)	CO (%)
636	82.894	86.392	0.13	0.14	1.41	67	-0.85	1.07	67	-1.40	74	0.069	100	100	0.0	0.0	139	84	52	85	52	64	245	-0.030	4.09	0.090
637	83.025	86.527	0.13	0.14	1.44	67	-0.80	1.08	67	-1.20	74	0.070	100	99	0.0	0.0	139	84	52	85	52	64	245	-0.030	4.32	0.070
Avg/Tot	83.025	86.527	0.13	0.14	1.41	71	-0.69	1.08	71	-1.31	82	0.07	100	100			200	83	55	82	55	67	307	-0.038	8.48	0.060

Wood Heater Lab Data - ASTM E2515

Manufacturer:	Kuma	Equipment Numbers:	283A, 592, 637
Model:	Aspen LE		
Tracking No.:	2357		
Project No.:	0123WM011E		
Run #:	5	Technician Signature:	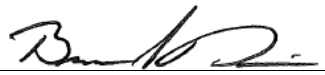
Date:	3/4/19		

	Sample Component	Sample #	Tare, mg	Final, mg	Particulate, mg
TRAIN 1 (First hour emissions)	A. Front filter catch	T139S	90.4	91.2	0.8
	B. Rear filter catch				0.0
	C. Probe catch*				0.0
	D. Filter seals catch*				0.0
TRAIN 1 (Remainder of test)	A. Front filter catch	T129AP	183.0	184.9	1.9
	B. Rear filter catch				0.0
	C. Probe catch*	34	115868.1	115868.1	0.0
	D. Filter seals catch*	R746	3356.3	3356.4	0.1
TRAIN 2	A. Front filter catch	T129BP	182.0	184.9	2.9
	B. Rear filter catch				0.0
	C. Probe catch*	35.0	114325.9	114325.9	0.0
	D. Filter seals catch*	R747	3306.7	3306.7	0.0
AMBIENT	A. Front filter catch*	D666	120.8	120.9	0.1

1st hour Sub-Total, mg:	0.8
Remainder Sub-Total, mg:	2.0

Train 1 Aggregate, mg:	2.8

Train 2 Aggregate, mg:	2.9

Ambient Aggregate, mg:	0.1

Client: Kuma
Model: Aspen LE
Project: 0123WM011E

Medium Burn 5

Required Load Density (WB)	12	lb/ft^3
Usable Firebox Volume	1.74	ft^3
Total Load Target	20.83	lb

Load Parameters

	Target Range (lb)
Total Load	19.79 - 21.87
Charcoal Bed	2.03 - 4.01
Core Load	9.37 - 13.54
Core Load Each	3.12 - 5.21
Remainder Load	7.29 - 11.46
Remainder Load Each	2.08 - 6.25

Load Inputs

	Weight (lb)	Moisture Readings (% DB)			Average
		1	2	3	
Core Load Piece 1	3.2	18.7	18.7	23.5	20.3
Core Load Piece 2	5.1	21.5	19.2	22	20.9
Core Load Piece 3	3.6	20.1	19.6	23.9	21.2
Remainder Load Piece 1	2.5	18.9	19.2	24.8	21.0
Remainder Load Piece 2	5.3	22.2	22.5	25.6	23.4
Remainder Load Piece 3					
Test Load Total	19.79				
Core Total	12.00				
Remainder Total	7.80				
Actual Charcoal Bed	2.4				
Actual Fuel Load Ending	0.0				

Input Validations

	Moisture (% DB)		Weight (lb, WB)	
Core Load Piece 1	20.3	In Range	3.2	In Range
Core Load Piece 2	20.9	In Range	5.1	In Range
Core Load Piece 3	21.2	In Range	3.6	In Range
Remainder Load Piece 1	21.0	In Range	2.5	In Range
Remainder Load Piece 2	23.4	In Range	5.3	In Range
Remainder Load Piece 3	NA	NA	NA	NA
Total Load % DB	21.5	In Range		

Client: Kuma
Model: Aspen LE
Project: 0123WM011E

Medium Burn 5

Actual Charcoal Bed		2.4	In Range
Actual Fuel Load Ending		0.0	Valid Test
	Ratios		
Remainder Load Weight Ratio	47%	In Range	≤ 67%
Core % of Total Wt.	61%	In Range	45-65%
Remainder % of Total Wt.	39%	In Range	35-55%
Actual Load % of Target	95%	In Range	95-105%

Additional Information

WB Moisture	17.7	%
Total Test Load WB	16.29	kg
Total Fuel Burned	16.3	lb
Total Fuel Burned During Test	19.8	≥ 90%
Actual Fuel Load Density	11.4	lb/ft^3

OMNI-Test Laboratories, Inc.

ASTM E2780 Wood Heater Run Sheets

Client: Kuma Project Number: 0123WM011E Run Number: 5 Med
Model: Aspen LE Tracking Number: 2357 Date: 3/4/2019
Test Crew: Aaron Kravitz
OMNI Equipment ID numbers: 132, 283A, 371, 372, 410, 420, 559, 592, 650, 637

Wood Heater Run Notes

Air Control Settings

Primary:

Open 11/32"

Secondary: ***Fixed***

Tertiary/Pilot: ***Fixed***

Fan: ***On low***

Test Notes

Start up procedures & Timeline:

High:

Ignition: *20 s w/ torch*
Bypass: *15 Min*
Startup Fuel: *Included w/ kindling*
Residual: *2.0 lb*
Test Loading: *Fuel loaded from ET= 54-56*
Door closed at ET=56

Med/Low:

Coal Bed: *2.4 lb*
Test Loading: *Loaded by 1:00*
Door/bypass 1:18
Primary 15:00

Time	Notes
30	*Fan on*
60-61	*Changed filter A*

Technician Signature: Date: 3/13/19

OMNI-Test Laboratories, Inc.

ASTM E2780 Wood Heater Run Sheets

Client: Kuma Project Number: 0123WM011E Run Number: 5 Med

Model: Aspen LE Tracking Number: 2357 Date: 3/4/2019

Test Crew: Aaron Kravitz

OMNI Equipment ID numbers: 132, 283A, 371, 372, 410, 420, 559, 592, 650, 637

ASTM E2515 Sampling Information

Test Location: *Myren Consulting* Clock Time @ ET=0: *15:40*

Span Gas Concentrations: **CO_2(%):** *12.40* **CO(%):** *2.480* **CO(ppm):** N/A

Test Run Validation Checks	Pre Test	Post Test
Zero Stack Gas Leakage	✓	✓
Zero Pitot Line Leakage	✓	✓
Zero Induced Draft	✓	
100% Smoke Capture	✓	

Test Run Validation Measurements	Pre Test		Post Test	
Scale Audit (lbs)	*10.0*		*10.0*	
CO_2 % (Zero/Span)	*0.11*	*12.41*	*-0.01*	*12.42*
CO % (Zero/Span)	*0.000*	*2.48*	*0.004*	*2.498*
CO ppm (Zero/Span)	*N/A*	*N/A*	*N/A*	*N/A*
Sample A Leakage (cfm @"Hg)	⊘		*0 @ -5*	
Sample B Leakage (cfm @"Hg)	⊘		*0 @ -7*	
Room Air Velocity (ft/min)	*<50*		*<50*	
Barometric Pressure ("Hg)	*28.56*		*28.58*	
Relative Humidity (%)	*15%*		*11%*	
Tunnel Static ("H_2O)	*-0.13*		*-0.14*	

Last Cleaning Dates

Flue Pipe	*2/25/19*
Dilution Tunnel	*2/25/19*
Sample Dryers	

Dilution Tunnel Traverse

Traverse Point	1	2	3	3	4	5	6	7	Center
Δp ("H_2O)	*114*	*114*	*114*	*114*	*113*	*113*	*113*	*113*	*113*
T (°F)	*0.062*	*0.072*	*0.062*	*0.060*	*0.058*	*0.070*	*0.064*	*0.062*	*0.069*

Technician Signature: Date: 3/13/19

Run 6 Pre

Non-Particulate Sampling High Burn

Wood Heater Test Data
Non-Sampling High Burn Data

Run: 6 Pre

Manufacturer: Kuma Stoves
Model: Aspen LE
Tracking No.: 2357
Project No.: 0123WM011E
Test Date: 06-Mar-19
Beginning Clock Time: 11:35

Total Sampling Time: 185 min
Recording Interval: 1 min
Background Sample Volume: _____ cubic feet

Meter Box Y Factor: 1.009 (1) 0.996 (2) 0.998 (Amb)

Barometric Pressure: Begin _____ Middle _____ End _____ Average 0

OMNI Equipment Numbers: _____

PM Control Modules: 371, 372
Dilution Tunnel MW(dry): 29.00 lb/lb-mole
Dilution Tunnel MW(wet): 28.78 lb/lb-mole
Dilution Tunnel H2O: 2.00 percent
Dilution Tunnel Static: _____ "H2O
Tunnel Area: 0.19635 ft2
Pitot Tube Cp: 0.99

Avg. Tunnel Velocity: #DIV/0! ft/sec.
Initial Tunnel Flow: #DIV/0! scfm
Average Tunnel Flow: #DIV/0! scfm
Post-Test Leak Check (1): _____ cfm @ _____ in. Hg
Post-Test Leak Check (2): _____ cfm @ _____ in. Hg
Average Test Piece Fuel Moisture: 21.14 Dry Basis %

Technician Signature: _____

Velocity Traverse Data

	Pt.1	Pt.2	Pt.3	Pt.4	Pt.5	Pt.6	Pt.7	Pt.8	Center	
Initial dP										"H2O
Temp:										°F

V_{strav} _____ ft/sec V_{scent} _____ ft/sec F_p _____

	Particulate Sampling Data														Fuel Weight (lb)		Temperature Data (°F)													Stack Gas Data		
Elapsed Time (min)	Gas Meter 1 (ft^3)	Gas Meter 2 (ft^3)	Sample Rate 1 (cfm)	Sample Rate 2 (cfm)	Orifice dH 1 ("H_2O)	Meter 1 Temp (°F)	Meter 1 Vacuum ("Hg)	Orifice dH 2 ("H_2O)	Meter 2 Temp (°F)	Meter 2 Vacuum ("Hg)	Dilution Tunnel (°F)	Dilution Tunnel Center dP	Pro. Rate 1	Pro. Rate 2	Scale Reading	Weight Change	Firebox Top	Firebox Bottom	Firebox Back	Firebox Left	Firebox Right	Avg. Stove Surface	Catalyst Exit	Stack	Filter 1	Dryer Exit 1	Filter 2	Dryer Exit 2	Ambient	Draft ("H_2O)	CO_2 (%)	CO (%)
0															8.9		72	66	66	67	68	68	73	78					69	-0.195		
1															8.2		72	66	66	67	68	68	73	78					70	-0.202		
2															8.1		73	66	66	67	68	68	86	102					69	-0.207		
3															8.1		75	66	66	67	68	68	115	121					70	-0.211		
4															8.1		77	67	66	68	68	69	129	139					70	-0.215		
5															8.0		83	67	66	68	69	71	164	181					69	-0.218		
6															7.9		91	68	66	70	70	73	216	242					69	-0.221		
7															7.8		99	69	66	72	71	75	249	308					70	-0.224		
8															7.7		108	70	66	74	73	78	281	343					70	-0.227		
9															7.5		120	72	66	77	75	82	331	374					70	-0.226		
10															7.4		135	75	66	81	78	87	395	394					69	-0.233		
11															7.2		151	79	66	86	82	93	440	414					69	-0.237		
12															7.0		169	84	66	91	85	99	483	436					70	-0.242		
13															6.9		187	90	66	97	90	106	527	453					70	-0.246		
14															6.7		206	96	66	103	94	113	555	456					70	-0.249		
15															6.5		224	103	66	110	99	120	575	464					70	-0.252		
16															6.3		243	111	66	116	104	128	595	473					70	-0.255		
17															6.2		265	119	67	123	109	137	820	430					70	-0.259		
18															6.0		295	127	67	130	115	147	954	431					70	-0.262		
19															5.8		328	135	67	137	121	158	1024	441					70	-0.265		
20															5.7		358	143	68	144	127	168	1019	449					71	-0.268		
21															5.5		386	151	69	152	133	178	1016	453					70	-0.270		
22															5.3		416	158	70	159	139	188	1061	461					70	-0.270		
23															5.1		444	164	72	166	146	198	1042	464					72	-0.271		
24															5.0		467	170	74	174	152	207	1008	464					71	-0.273		
25															4.8		486	176	76	181	158	215	1001	464					72	-0.277		
26															4.6		506	182	79	189	165	224	1040	467					71	-0.278		
27															4.5		524	188	83	196	171	232	1054	472					71	-0.279		
28															4.3		542	194	87	203	177	241	1095	477					72	-0.280		
29															4.1		566	200	91	210	183	250	1177	485					70	-0.281		
30															4.0		585	207	96	217	189	259	1155	487					71	-0.283		
31															3.8		597	214	101	225	195	266	1110	486					71	-0.285		
32															3.7		604	222	106	233	201	273	1085	482					71	-0.287		
33															3.5		611	230	112	242	207	280	1082	481					71	-0.289		
34															3.4		615	239	117	251	213	287	1061	480					70	-0.291		

Wood Heater Test Data
Non-Sampling High Burn Data

Run: 6 Pre

Manufacturer: Kuma Stoves
Model: Aspen LE
Tracking No.: 2357
Project No.: 0123WM011E
Test Date: 06-Mar-19
Beginning Clock Time: 11:35

Total Sampling Time: 185 min
Recording Interval: 1 min
Background Sample Volume: _____ cubic feet

Meter Box Y Factor: 1.009 (1) 0.996 (2) 0.998 (Amb)

Barometric Pressure: Begin _____ Middle _____ End _____ Average 0

OMNI Equipment Numbers: _____

PM Control Modules: 371, 372
Dilution Tunnel MW(dry): 29.00 lb/lb-mole
Dilution Tunnel MW(wet): 28.78 lb/lb-mole
Dilution Tunnel H2O: 2.00 percent
Dilution Tunnel Static: _____ "H2O
Tunnel Area: 0.19635 ft2
Pitot Tube Cp: 0.99

Avg. Tunnel Velocity: #DIV/0! ft/sec.
Initial Tunnel Flow: #DIV/0! scfm
Average Tunnel Flow: #DIV/0! scfm
Post-Test Leak Check (1): _____ cfm @ _____ in. Hg
Post-Test Leak Check (2): _____ cfm @ _____ in. Hg
Average Test Piece Fuel Moisture: 21.14 Dry Basis %

Technician Signature: _____

Velocity Traverse Data

	Pt.1	Pt.2	Pt.3	Pt.4	Pt.5	Pt.6	Pt.7	Pt.8	Center	
Initial dP										"H2O
Temp:										°F

V_{strav} _____ ft/sec V_{scent} _____ ft/sec F_p _____

	Particulate Sampling Data														Fuel Weight (lb)		Temperature Data (°F)												Stack Gas Data		
Elapsed Time (min)	Gas Meter 1 (ft^3)	Gas Meter 2 (ft^3)	Sample Rate 1 (cfm)	Sample Rate 2 (cfm)	Orifice dH 1 ("H_2O)	Meter 1 Temp (°F)	Meter 1 Vacuum ("Hg)	Orifice dH 2 ("H_2O)	Meter 2 Temp (°F)	Meter 2 Vacuum ("Hg)	Dilution Tunnel (°F)	Dilution Tunnel Center dP	Pro. Rate 1	Pro. Rate 2	Scale Reading	Weight Change	Firebox Top	Firebox Bottom	Firebox Back	Firebox Left	Firebox Right	Avg. Stove Surface	Catalyst Exit	Stack	Filter 1	Dryer Exit 1	Filter 2	Dryer Exit 2	Ambient	Draft ("H_2O)	CO_2 (%)	CO (%)
35															3.3		620	248	123	260	220	294	1087	479					71	-0.293		
36															3.1		626	257	129	270	226	302	1074	480					71	-0.295		
37															3.0		628	266	135	279	232	308	1065	479					71	-0.297		
38															2.9		633	274	141	289	238	315	1053	477					71	-0.300		
39															2.7		634	283	148	298	244	321	1042	475					71	-0.303		
40															2.7		635	292	155	308	250	328	1026	472					71	-0.306		
41															2.5		634	300	162	317	255	334	1018	467					72	-0.305		
42															2.4		634	309	169	325	261	340	1013	465					72	-0.313		
43															2.3		633	317	175	334	267	345	1012	464					72	-0.316		
44															2.2		633	325	182	343	273	351	1009	462					72	-0.318		
45															2.1		632	333	187	351	279	356	999	460					73	-0.320		
46															2.0		631	341	193	359	284	362	1010	456					72	-0.323		
47															2.0		629	349	199	367	289	367	1008	453					73	-0.326		
48															1.9		626	357	206	375	295	372	991	449					72	-0.329		
49															11.9		622	366	212	383	301	377	980	444					72	-0.333		
50															18.2		615	376	229	390	305	383	746	541					73	-0.336		
51															18.0		595	384	236	396	311	384	699	450					72	-0.340		
52															17.9		589	391	242	403	316	388	907	443					72	-0.342		
53															17.8		587	398	249	409	321	393	947	443					72	-0.345		
54															17.6		588	404	256	413	325	397	981	446					72	-0.347		
55															17.4		567	407	262	415	327	396	1008	448					72	-0.349		
56															17.3		559	399	268	417	329	394	1033	450					72	-0.351		
57															17.1		552	392	273	418	330	393	1019	446					73	-0.354		
58															17.0		546	386	277	418	331	392	1022	444					72	-0.356		
59															16.8		541	380	281	417	331	390	1018	444					72	-0.359		
60															16.7		537	374	283	416	331	388	1014	441					73	-0.362		
61															16.5		534	369	285	415	331	387	1016	439					73	-0.365		
62															16.3		532	364	286	413	331	385	1020	438					73	-0.369		
63															16.2		530	360	287	411	331	384	1021	438					73	-0.372		
64															16.1		529	356	287	410	330	382	1013	439					73	-0.375		
65															15.9		528	352	288	408	330	381	1012	438					73	-0.378		
66															15.8		528	349	287	406	330	380	1020	438					73	-0.380		
67															15.6		528	347	287	405	329	379	1011	439					74	-0.381		
68															15.5		527	344	286	403	329	378	1015	439					73	-0.382		
69															15.3		527	343	286	402	329	377	1015	437					73	-0.382		

Wood Heater Test Data
Non-Sampling High Burn Data

Run: 6 Pre

Manufacturer: Kuma Stoves
Model: Aspen LE
Tracking No.: 2357
Project No.: 0123WM011E
Test Date: 06-Mar-19
Beginning Clock Time: 11:35

Total Sampling Time: 185 min
Recording Interval: 1 min
Background Sample Volume: _____ cubic feet

Meter Box Y Factor: 1.009 (1) 0.996 (2) 0.998 (Amb)

Barometric Pressure: Begin _____ Middle _____ End _____ Average 0

OMNI Equipment Numbers: _____

PM Control Modules: 371, 372
Dilution Tunnel MW(dry): 29.00 lb/lb-mole
Dilution Tunnel MW(wet): 28.78 lb/lb-mole
Dilution Tunnel H2O: 2.00 percent
Dilution Tunnel Static: _____ "H2O
Tunnel Area: 0.19635 ft2
Pitot Tube Cp: 0.99

Avg. Tunnel Velocity: #DIV/0! ft/sec.
Initial Tunnel Flow: #DIV/0! scfm
Average Tunnel Flow: #DIV/0! scfm
Post-Test Leak Check (1): _____ cfm @ _____ in. Hg
Post-Test Leak Check (2): _____ cfm @ _____ in. Hg
Average Test Piece Fuel Moisture: 21.14 Dry Basis %

Technician Signature: _____

Velocity Traverse Data

	Pt.1	Pt.2	Pt.3	Pt.4	Pt.5	Pt.6	Pt.7	Pt.8	Center	
Initial dP										"H2O
Temp:										°F

V_{strav} _____ ft/sec V_{scent} _____ ft/sec F_p _____

	Particulate Sampling Data														Fuel Weight (lb)		Temperature Data (°F)												Stack Gas Data		
Elapsed Time (min)	Gas Meter 1 (ft^3)	Gas Meter 2 (ft^3)	Sample Rate 1 (cfm)	Sample Rate 2 (cfm)	Orifice dH 1 ("H_2O)	Meter 1 Temp (°F)	Meter 1 Vacuum ("Hg)	Orifice dH 2 ("H_2O)	Meter 2 Temp (°F)	Meter 2 Vacuum ("Hg)	Dilution Tunnel (°F)	Dilution Tunnel Center dP	Pro. Rate 1	Pro. Rate 2	Scale Reading	Weight Change	Firebox Top	Firebox Bottom	Firebox Back	Firebox Left	Firebox Right	Avg. Stove Surface	Catalyst Exit	Stack	Filter 1	Dryer Exit 1	Filter 2	Dryer Exit 2	Ambient	Draft ("H_2O)	CO_2 (%)	CO (%)
70															15.2		526	341	285	401	329	376	1008	437					75	-0.382		
71															15.1		524	340	284	399	329	375	1000	434					74	-0.383		
72															14.9		521	339	283	398	328	374	999	434					73	-0.384		
73															14.8		519	338	282	397	329	373	1006	435					73	-0.387		
74															14.6		518	337	282	396	328	372	1008	434					73	-0.390		
75															14.5		518	337	281	395	329	372	1006	433					73	-0.392		
76															14.3		517	336	280	395	329	371	1009	432					73	-0.395		
77															14.2		517	336	279	395	329	371	1007	432					73	-0.398		
78															14.1		517	335	278	394	329	371	1005	433					73	-0.399		
79															13.9		517	335	278	394	330	371	1003	431					74	-0.401		
80															13.8		516	335	277	394	330	370	998	432					73	-0.403		
81															13.7		515	335	276	394	330	370	994	431					73	-0.406		
82															13.5		513	335	276	395	331	370	989	429					74	-0.409		
83															13.4		511	336	275	395	331	370	988	429					73	-0.411		
84															13.3		508	336	275	395	331	369	982	428					73	-0.413		
85															13.2		505	336	275	395	332	369	977	427					73	-0.416		
86															13.1		502	336	274	395	332	368	973	425					74	-0.417		
87															12.9		498	337	274	396	332	367	970	424					74	-0.417		
88															12.8		496	337	274	396	332	367	973	424					74	-0.418		
89															12.7		494	337	275	396	332	367	1006	426					74	-0.419		
90															12.5		499	338	275	397	332	368	1054	433					74	-0.420		
91															12.3		503	338	275	398	333	369	1067	439					73	-0.421		
92															12.2		507	337	275	398	333	370	1059	441					73	-0.422		
93															12.0		510	337	276	399	333	371	1040	440					74	-0.425		
94															11.8		511	336	276	401	333	371	1029	439					74	-0.427		
95															11.7		513	336	276	403	335	373	1024	438					75	-0.431		
96															11.5		514	335	277	405	335	373	1021	437					74	-0.433		
97															11.4		515	334	277	408	337	374	1020	436					74	-0.435		
98															11.2		517	333	277	410	338	375	1024	435					74	-0.435		
99															11.1		519	333	278	413	341	377	1025	434					76	-0.436		
100															10.9		520	333	278	416	342	378	1023	432					75	-0.437		
101															10.9		521	333	279	419	344	379	1029	433					75	-0.439		
102															10.7		522	334	279	422	345	380	1030	432					76	-0.440		
103															10.5		524	334	280	425	346	382	1032	432					75	-0.438		
104															10.4		526	335	280	428	348	383	1041	432					75	-0.438		

Wood Heater Test Data
Non-Sampling High Burn Data

Run: 6 Pre

Manufacturer: Kuma Stoves
Model: Aspen LE
Tracking No.: 2357
Project No.: 0123WM011E
Test Date: 06-Mar-19
Beginning Clock Time: 11:35

Total Sampling Time: 185 min
Recording Interval: 1 min
Background Sample Volume: _____ cubic feet

Meter Box Y Factor: 1.009 (1) 0.996 (2) 0.998 (Amb)

Barometric Pressure: Begin _____ Middle _____ End _____ Average 0

OMNI Equipment Numbers: _____

PM Control Modules: 371, 372
Dilution Tunnel MW(dry): 29.00 lb/lb-mole
Dilution Tunnel MW(wet): 28.78 lb/lb-mole
Dilution Tunnel H2O: 2.00 percent
Dilution Tunnel Static: _____ "H2O
Tunnel Area: 0.19635 ft2
Pitot Tube Cp: 0.99

Avg. Tunnel Velocity: #DIV/0! ft/sec.
Initial Tunnel Flow: #DIV/0! scfm
Average Tunnel Flow: #DIV/0! scfm
Post-Test Leak Check (1): _____ cfm @ _____ in. Hg
Post-Test Leak Check (2): _____ cfm @ _____ in. Hg
Average Test Piece Fuel Moisture: 21.14 Dry Basis %

Technician Signature: _____

Velocity Traverse Data

	Pt.1	Pt.2	Pt.3	Pt.4	Pt.5	Pt.6	Pt.7	Pt.8	Center	
Initial dP										"H2O
Temp:										°F

V_{strav} _____ ft/sec V_{scent} _____ ft/sec F_p _____

	Particulate Sampling Data														Fuel Weight (lb)		Temperature Data (°F)												Stack Gas Data		
Elapsed Time (min)	Gas Meter 1 (ft^3)	Gas Meter 2 (ft^3)	Sample Rate 1 (cfm)	Sample Rate 2 (cfm)	Orifice dH 1 ("H_2O)	Meter 1 Temp (°F)	Meter 1 Vacuum ("Hg)	Orifice dH 2 ("H_2O)	Meter 2 Temp (°F)	Meter 2 Vacuum ("Hg)	Dilution Tunnel (°F)	Dilution Tunnel Center dP	Pro. Rate 1	Pro. Rate 2	Scale Reading	Weight Change	Firebox Top	Firebox Bottom	Firebox Back	Firebox Left	Firebox Right	Avg. Stove Surface	Catalyst Exit	Stack	Filter 1	Dryer Exit 1	Filter 2	Dryer Exit 2	Ambient	Draft ("H_2O)	CO_2 (%)	CO (%)
105															10.3		528	336	281	432	349	385	1050	433					74	-0.436		
106															10.1		530	337	281	435	351	387	1061	435					75	-0.433		
107															10.0		535	338	282	438	353	389	1079	437					75	-0.432		
108															9.9		539	339	282	441	355	391	1087	440					75	-0.433		
109															9.7		544	341	283	444	357	394	1089	442					74	-0.435		
110															9.6		548	342	284	448	358	396	1090	442					75	-0.438		
111															9.4		552	344	284	452	360	398	1091	443					75	-0.442		
112															9.3		555	346	285	455	362	401	1092	444					75	-0.448		
113															9.1		558	347	286	459	364	403	1093	443					75	-0.454		
114															9.0		561	349	287	463	367	405	1093	443					75	-0.458		
115															8.9		563	351	288	466	368	407	1091	444					75	-0.460		
116															8.7		566	353	289	470	370	410	1094	445					75	-0.463		
117															8.6		568	355	290	474	372	412	1090	446					75	-0.465		
118															8.5		570	356	291	478	374	414	1092	444					76	-0.468		
119															8.3		572	358	293	482	376	416	1094	444					75	-0.471		
120															8.2		573	359	294	486	378	418	1091	444					76	-0.473		
121															8.1		574	360	296	489	380	420	1089	443					75	-0.474		
122															8.0		575	361	297	493	382	422	1083	442					75	-0.475		
123															7.8		575	363	299	497	385	424	1079	440					75	-0.474		
124															7.7		575	363	300	500	387	425	1075	440					74	-0.474		
125															7.6		574	365	302	504	389	427	1072	439					75	-0.477		
126															7.5		573	366	304	507	391	428	1074	438					75	-0.480		
127															7.4		573	367	305	510	393	430	1071	436					76	-0.484		
128															7.2		572	368	307	514	395	431	1070	437					75	-0.489		
129															7.1		572	369	309	517	397	433	1074	438					75	-0.493		
130															7.0		572	371	311	520	399	435	1075	438					75	-0.496		
131															6.9		573	373	313	523	400	436	1074	437					75	-0.500		
132															6.7		573	375	315	526	402	438	1069	437					75	-0.504		
133															6.6		573	377	317	529	404	440	1070	436					75	-0.508		
134															6.5		573	379	320	533	405	442	1070	437					76	-0.512		
135															6.4		574	381	321	536	406	444	1074	435					76	-0.517		
136															6.3		574	383	324	539	408	446	1076	435					76	-0.522		
137															6.2		575	385	326	542	409	447	1076	434					76	-0.526		
138															6.0		575	388	329	545	410	449	1076	434					76	-0.528		
139															5.9		575	390	331	548	411	451	1076	434					75	-0.530		

Wood Heater Test Data
Non-Sampling High Burn Data

Run: 6 Pre

Manufacturer: Kuma Stoves
Model: Aspen LE
Tracking No.: 2357
Project No.: 0123WM011E
Test Date: 06-Mar-19
Beginning Clock Time: 11:35

Total Sampling Time: 185 min
Recording Interval: 1 min
Background Sample Volume: _____ cubic feet

Meter Box Y Factor: 1.009 (1) 0.996 (2) 0.998 (Amb)

Barometric Pressure: Begin _____ Middle _____ End _____ Average 0

OMNI Equipment Numbers: _____

PM Control Modules: 371, 372
Dilution Tunnel MW(dry): 29.00 lb/lb-mole
Dilution Tunnel MW(wet): 28.78 lb/lb-mole
Dilution Tunnel H2O: 2.00 percent
Dilution Tunnel Static: _____ "H2O
Tunnel Area: 0.19635 ft2
Pitot Tube Cp: 0.99

Avg. Tunnel Velocity: #DIV/0! ft/sec.
Initial Tunnel Flow: #DIV/0! scfm
Average Tunnel Flow: #DIV/0! scfm
Post-Test Leak Check (1): _____ cfm @ _____ in. Hg
Post-Test Leak Check (2): _____ cfm @ _____ in. Hg
Average Test Piece Fuel Moisture: 21.14 Dry Basis %

Technician Signature: _____

Velocity Traverse Data

	Pt.1	Pt.2	Pt.3	Pt.4	Pt.5	Pt.6	Pt.7	Pt.8	Center	
Initial dP										"H2O
Temp:										°F

V_{strav} _____ ft/sec V_{scent} _____ ft/sec F_p _____

	Particulate Sampling Data														Fuel Weight (lb)		Temperature Data (°F)													Stack Gas Data		
Elapsed Time (min)	Gas Meter 1 (ft^3)	Gas Meter 2 (ft^3)	Sample Rate 1 (cfm)	Sample Rate 2 (cfm)	Orifice dH 1 ("H_2O)	Meter 1 Temp (°F)	Meter 1 Vacuum ("Hg)	Orifice dH 2 ("H_2O)	Meter 2 Temp (°F)	Meter 2 Vacuum ("Hg)	Dilution Tunnel (°F)	Dilution Tunnel Center dP	Pro. Rate 1	Pro. Rate 2	Scale Reading	Weight Change	Firebox Top	Firebox Bottom	Firebox Back	Firebox Left	Firebox Right	Avg. Stove Surface	Catalyst Exit	Stack	Filter 1	Dryer Exit 1	Filter 2	Dryer Exit 2	Ambient	Draft ("H_2O)	CO_2 (%)	CO (%)
140															5.8		575	393	334	550	413	453	1081	433					76	-0.532		
141															5.7		575	395	337	553	414	455	1078	433					76	-0.533		
142															5.6		574	397	339	555	415	456	1059	431					76	-0.533		
143															5.6		570	400	341	557	416	457	1036	427					76	-0.533		
144															5.5		566	402	343	558	417	457	1026	424					76	-0.534		
145															5.4		561	404	346	560	419	458	1012	420					76	-0.534		
146															5.3		555	405	348	561	420	458	994	417					76	-0.535		
147															5.2		549	407	350	562	421	458	975	414					76	-0.537		
148															5.2		543	408	352	563	422	458	961	410					76	-0.541		
149															5.1		536	410	354	563	423	457	951	407					76	-0.545		
150															5.0		529	411	356	563	424	457	944	404					76	-0.549		
151															5.0		523	412	357	564	425	456	940	402					76	-0.554		
152															4.9		518	414	359	564	426	456	939	401					76	-0.557		
153															4.9		513	415	361	564	426	456	931	399					76	-0.560		
154															4.8		507	416	363	564	426	455	922	397					76	-0.564		
155															4.7		501	417	364	563	427	454	912	396					76	-0.567		
156															4.7		495	418	366	563	427	454	906	395					76	-0.569		
157															4.6		488	419	367	563	427	453	886	392					76	-0.571		
158															4.6		482	418	369	563	427	452	889	391					76	-0.573		
159															4.5		475	418	370	562	427	450	872	389					76	-0.575		
160															4.5		468	418	371	562	427	449	865	387					76	-0.577		
161															4.4		462	417	372	561	427	448	861	386					76	-0.578		
162															4.4		456	417	373	560	427	447	843	383					76	-0.580		
163															4.4		450	416	373	559	427	445	839	382					76	-0.582		
164															4.3		444	415	374	558	427	444	839	381					75	-0.585		
165															4.3		440	414	375	557	427	443	843	380					75	-0.587		
166															4.2		436	413	375	556	427	441	848	381					75	-0.589		
167															4.2		433	412	376	555	426	440	851	381					75	-0.591		
168															4.1		430	411	376	553	427	439	848	381					75	-0.593		
169															4.1		427	410	376	552	427	438	842	381					76	-0.595		
170															4.0		425	409	376	550	427	437	836	379					75	-0.598		
171															4.0		422	408	376	549	427	436	830	378					75	-0.601		
172															3.9		420	407	376	548	428	436	825	375					75	-0.604		
173															3.9		417	407	377	546	429	435	823	374					75	-0.606		
174															3.8		415	406	377	545	430	435	820	374					75	-0.609		

Wood Heater Test Data
Non-Sampling High Burn Data

Run: 6 Pre

Manufacturer: Kuma Stoves
Model: Aspen LE
Tracking No.: 2357
Project No.: 0123WM011E
Test Date: 06-Mar-19
Beginning Clock Time: 11:35

Total Sampling Time: 185 min
Recording Interval: 1 min
Background Sample Volume: _____ cubic feet

Meter Box Y Factor: 1.009 (1) 0.996 (2) 0.998 (Amb)

Barometric Pressure: Begin _____ Middle _____ End _____ Average 0

OMNI Equipment Numbers: _____

PM Control Modules: 371, 372
Dilution Tunnel MW(dry): 29.00 lb/lb-mole
Dilution Tunnel MW(wet): 28.78 lb/lb-mole
Dilution Tunnel H2O: 2.00 percent
Dilution Tunnel Static: _____ "H2O
Tunnel Area: 0.19635 ft2
Pitot Tube Cp: 0.99

Avg. Tunnel Velocity: #DIV/0! ft/sec.
Initial Tunnel Flow: #DIV/0! scfm
Average Tunnel Flow: #DIV/0! scfm
Post-Test Leak Check (1): _____ cfm @ _____ in. Hg
Post-Test Leak Check (2): _____ cfm @ _____ in. Hg
Average Test Piece Fuel Moisture: 21.14 Dry Basis %

Technician Signature: _____

Velocity Traverse Data

	Pt.1	Pt.2	Pt.3	Pt.4	Pt.5	Pt.6	Pt.7	Pt.8	Center	
Initial dP										"H2O
Temp:										°F

V_{strav} _____ ft/sec V_{scent} _____ ft/sec F_p _____

	Particulate Sampling Data														Fuel Weight (lb)		Temperature Data (°F)											Stack Gas Data		
Elapsed Time (min)	Gas Meter 1 (ft^3)	Gas Meter 2 (ft^3)	Sample Rate 1 (cfm)	Sample Rate 2 (cfm)	Orifice dH 1 ("H_2O)	Meter 1 Temp (°F)	Meter 1 Vacuum ("Hg)	Orifice dH 2 ("H_2O)	Meter 2 Temp (°F)	Meter 2 Vacuum ("Hg)	Dilution Tunnel (°F)	Dilution Tunnel Center dP	Pro. Rate 1	Pro. Rate 2	Scale Reading	Weight Change	Firebox Top	Firebox Bottom	Firebox Back	Firebox Left	Firebox Right	Avg. Stove Surface	Catalyst Exit	Stack	Filter 1	Dryer Exit 1	Filter 2	Dryer Exit 2	Ambient	Draft ("H_2O)	CO_2 (%)	CO (%)
175															3.8		413	406	377	543	431	434	822	374					75	-0.611		
176															3.7		410	405	377	542	432	433	816	372					75	-0.613		
177															3.7		408	405	377	540	433	433	814	373					76	-0.615		
178															3.7		406	404	377	539	435	432	817	373					75	-0.617		
179															3.6		405	403	377	537	437	432	820	373					76	-0.618		
180															3.6		403	402	377	536	439	431	821	372					76	-0.619		
181															3.5		401	401	378	535	441	431	820	373					75	-0.620		
182															3.5		400	399	379	533	443	431	815	372					76	-0.621		
183															3.4		398	398	379	532	445	430	813	371					76	-0.622		
184															3.4		396	397	378	530	448	430	812	370					75	-0.622		
185															3.3		394	395	379	529	450	429	811	370					74	-0.618		
Avg/Tot	0.000	0.000	#DIV/0!	#DIV/0!	#DIV/0!	#DIV/0!		#DIV/0!	#DIV/0!		#DIV/0!	#DIV/0!	#DIV/0!	#DIV/0!								361.6				#DIV/0!	#DIV/0!	#DIV/0!	74	-0.423		

Wood Heater Test Results

Manufacturer:	Kuma Stoves
Model:	Aspen LE
Project No.:	0123WM011E
Tracking No.:	2357
Run:	6 Pre
Test Date:	03/06/19

Burn Rate	**2.44 kg/hr dry**
Average Tunnel Temperature	
Average Gas Velocity in Dilution Tunnel - vs	
Average Gas Flow Rate in Dilution Tunnel - Qsd	
Average Delta p	
Total Time of Test	136 minutes

Technician Signature:_____

OMNI-Test Laboratories, Inc. **ASTM E2780 Wood Heater Run Sheets**

Client: Kuma Project Number: 0123WM011E Run Number: 6 Med

Model: Aspen Tracking Number: 2357 Date: 3/6/2019

Test Crew: Aaron Kravitz

OMNI Equipment ID numbers: 132, 283A, 371, 372, 410, 420, 559, 592, 650, 637

Wood Heater Run Notes

Air Control Settings

Primary:

Open 13/32"

Secondary: *Fixed*

Tertiary/Pilot: *Fixed*

Fan: *On low*

Test Notes

Start up procedures & Timeline:

High:

Ignition: *20 s w/ torch*
Bypass: *15 Min*
Startup Fuel: *Included w/ kindling*
Residual: *1.9 lb*
Test Loading: *Fuel loaded from ET= 48-50*
Door closed at ET=50

Med/Low:

Coal Bed: *2.4 lb*
Test Loading: *Loaded by 1:30*
Door 1:45
Primary 15:00
Fan 30:00

Time	Notes
30	*Fan on*
60-61	*Changed filter A*

Technician Signature: Date:

Adjunct to ASTM E XXXX Wood Heater Cordwood Test Method - May 10, 2017 Version

Cordwood Fuel Load Calculators - 10 lb/ft^3 Nominal Load Density

Core 45-65% of Total Load Weight, Remainder 35-55% of Total Load Weight

Values to be input manually

THIS DOCUMENT IS NOT AN ASTM STANDARD; IT IS UNDER CONSIDERATION WITHIN AN ASTM TECHNICAL COMMITTEE BUT HAS NOT RECEIVED ALL APPROVALS REQUIRED TO BECOME AN ASTM STANDARD. IT SHALL NOT BE REPRODUCED OR CIRCULATED OR QUOTED, IN WHOLE OR IN PART, OUTSIDE OF ASTM COMMITTEE ACTIVITIES EXCEPT WITH THE APPROVAL OF THE CHAIRMAN OF THE COMMITTEE HAVING JURISDICTION AND THE PRESIDENT OF THE SOCIETY. *COPYRIGHT ASTM, 100 BARR HARBOR DRIVE, WEST CONSHOHOCKEN, PA 19428. ALL RIGHTS RESERVED.*

For All Usable Firebox Volumes - High Fire Test Only

Nominal Required Load Density (wet basis)	10	lb/ft^3				
Usable Firebox Volume	1.74	ft^3				
Total Nom. Load Wt. Target	17.36	lb				
Total Load Wt. Allowable Range	16.49	to	18.20	lb		
Core Target Wt. Allowable Range	7.80	to	11.30	lb		
Remainder Load Wt. Allowable Range	6.10	to	9.50	lb		
						Mid-Point
Core Load Pc. Wt. Allowable Range	2.60	to	4.30	lb		3.45
Remainder Load Pc. Wt. Allowable Range	1.70	to	9.50	lb		5.60
	Pc. #					
Core Load Piece Wt. Actual	1	3.81	lb		In Range	
	2	3.23	lb		In Range	
	3	3.02	lb		In Range	
Core Load Total. Wt. Actual		10.05	lb		In Range	
	Pc. #					
Remainder Load Piece Wt.	1	4.57	lb		In Range	
(1 to 3 Pcs.)	2	2.01	lb		In Range	
	3		lb		NA	
Remainder Load Tot. Wt. Act		6.58	lb		In Range	
Total Load Wt. Actual		16.63	lb		In Range	
Core % of Total Wt.		60%			In Range	45-65%
Remainder % of Total Wt.		40%			In Range	35-55%
Actual Load % of Nominal Target		96%			In Range	95-105%
Actual Fuel Load Density		9.6	lb/ft^3			
Kindling and Start-up Fuel						
Maximim Kindling Wt. (20% of Tot. Load Wt.)		3.33	lb			
Actual Kindling Wt.		3.32	lb		In Range	20.0%
Maximum Start-up Fuel Wt. (30% of Tot. Load Wt.)		4.99	lb			
Actual Start-up Fuel Wt.		4.99	lb		In Range	30.0%
Allowable Residual Start-up Fuel Wt. Range	1.7	to	3.3	lb		Mid-Point
Actual Residual Start-up Fuel Wt.		2	lb		In Range	2.5
Total Wt. All Fuel Added (wet basis)		24.94	lb			
High Fire Test Run End Point Range	Low		High			Mid-Point
Based on Fuel Load Wt. (w/tares)	1.5	to	1.8	lb		1.7
Actual Fuel Load Ending Wt.		1.5	lb		In Range	

Fuel Piece Moisture Reading (%-dry basis)

1	2	3	Ave.		Pc. Wt. Dry Basis			
19.8	19.3	24.4	21.2	In Range	3.14	lb	1.42	kg
19.3	18.7	22.8	20.3	In Range	2.68	lb	1.22	kg
17.7	18.3	23.4	19.8	In Range	2.52	lb	1.14	kg
21.4	22.6	26	23.3	In Range	3.70	lb	1.68	kg
20.1	20.8	22.5	21.1	In Range	1.66	lb	0.75	kg
			NA	NA	NA	lb	NA	kg

Total Load Ave. MC (%-dry basis)	21.3	In Range				
Total Load Ave. MC % (wet basis)	17.6					
Total Test Load Weight (dry basis) →			13.70	lb	6.22	kg

Kindling Moisture (%-dry basis)

8.3	11.2	6.5	8.7	In Range	3.06	lb	1.39	kg

Start-up Fuel Moisture Readings (%-dry basis)

20.3	23.5	19.8	21.2	In Range	4.11	lb	1.87	kg

Total Wt. All Fuel Added (dry basis) →	20.88	lb	9.47	kg
Total Wt. All Fuel Burned (dry basis) →	17.4	lb	7.9	kg

ASTM E3053 / ASTM E2515 Emissions Results

Manufacturer:	Kuma
Model:	Aspen LE
Project No.:	0123WM011E
Tracking No.:	2357
Run:	6
Test Date:	03/06/19

Technician Signature: 

Test Results	
Particulate Emission Rate	**0.40 g/hr**
Total Particulate Emissions - E_T	3.73 g
Emissisons Factor	0.50 g/kg
CSA B415 Efficiency	**82.0% HHV**

First Hour Emissions	
Particulate Emission Rate	1.68 g/hr
Total Particulate Emissions - E_T	1.68 g
Emissisons Factor	0.66 g/kg

Burn Rate (Test Load)	**0.80 kg/hr dry**
Average Tunnel Temperature	90 degrees F
Avg.Velocity in Dilution Tunnel - v_s	16.97 ft/second
Avg.Flow Rate in Dilution Tunnel - Q_{sd}	10520.9 dscf/hour
Average Δp	0.066 inches H20
Average ΔH	1.49 inches H20
Total Time of Test	564 minutes

Run 6

Medium Burn

ASTM E3053 / ASTM E2515 Emissions Results

Manufacturer: Kuma
Model: Aspen LE
Project No.: 0123WM011E
Tracking No.: 2357
Run: 6
Test Date: 03/06/19

Technician Signature:

	1st Hour	Sample Train 1	Sample Train 2	Sample	Unit
Total Sample Volume - V_m	8.114	76.980	78.702	55.438	ft^3
Average Gas Meter Temperature	79.48	79.41	79.42	74	°F
Sample Volume (Std. Conditions) - V_{mstd}	7.504	71.205	71.784	50.953	dsf^3
Total Particulates - m_n	1.2	2.6	2.8	0	mg
Particulate Concentration - C_r/C_s	1.599E-04	3.65E-05	3.90E-05	0.00E+00	g/dsf^3
Total Particulate Emissions - E_T	1.68	3.61	3.86	0.00	g
Particulate Emission Rate	1.68	0.38	0.41	0.00	g/hr
Emissisons Factor	0.66	0.48	0.52		g/kg
Delta from Avg. Particulate Emissions		0.12	0.12		g

Quality Checks

Filter Temps 80 - 90 °F	OK	Ambient Temp (55-90°F)	OK
Filter Face Velocity	OK	Negative Probe Weight	OK
Leakage Rate	OK	Pro-Rate Variation	OK
		Dual Train Comparison	OK

CSA B415.1 Results - Test Load

Manufacturer:	Kuma	**Control #:**	0123WM011E
Model:	Aspen LE	**Test Duration:**	564
Date:	03/06/19	**Output Category:**	Med
Run:	6		

Test Results in Accordance with CSA B415.1-09

	HHV Basis	LHV Basis
Overall Efficiency	82.0%	88.6%
Combustion Efficiency	99.5%	99.5%
Heat Transfer Efficiency	82%	89.1%

	kJ/h	BTU/h
Output Rate	12,929	12,265
Input Rate	15,765	14,955

	kg/h	lb/h
Burn Rate	0.80	1.75

	dry kg	dry lb
Test Load Weight	7.48	16.49

MC wet (%)	17.50
MC dry (%)	21.21
Particulate (g)	71.78
CO (g)	69
Test Duration (h)	9.40

	g/MJ Output	g/kg Dry Fuel	g/h	lb/MM Btu Output
Particulate Emissions	0.59	9.60	7.64	1.37
CO Emissions	0.57	9.25	7.36	1.32
Air/Fuel Ratio (A/F)	12.54			

~~**VERSION** **2.2** **12/14/2009**~~ ***Modified to fit this Format***

OMNI-Test Laboratories, Inc

Wood Heater Test Data - ASTM E3053 / ASTM E2515

Run: 6

Manufacturer: Kuma
Model: Aspen LE
Tracking No.: 2357
Project No.: 0123WM011E
Test Date: 06-Mar-19
Beginning Clock Time: 14:34

Fuel Moisture (%DB): #########
Total Sampling Time: ######### min
Recording Interval: 1 min
Background Sample Volume: 55.438 cubic feet

Meter Box Y Factor: 1.009 (1) 0.996 (2) 0.996 (Amb)

Barometric Pressure:

Begin	Middle	End	Avg
27.94	27.92	27.91	27.92 "Hg

PM Control Modules: 371/372
Dilution Tunnel MW(dry): 29.00 lb/lb-mole
Dilution Tunnel MW(wet): 28.78 lb/lb-mole
Dilution Tunnel H2O: 2.00 percent
Dilution Tunnel Static: -0.130 "H_2O
Tunnel Area: 0.1963 ft^2
Pitot Tube Cp: 0.99

Avg. Tunnel Velocity: 16.97 ft/sec.
Intial Tunnel Flow: 174.5 scfm
Average Tunnel Flow: 175.3 scfm
Post-Test Leak Check (1): 0.001 cfm @ -6 in. Hg
Post-Test Leak Check (2): 0.000 cfm @ -8 in. Hg

Velocity Traverse Data

	Pt.1	Pt.2	Pt.3	Pt.4	Pt.5	Pt.6	Pt.7	Pt.8	Center	
Initial dP	0.056	0.064	0.064	0.060	0.058	0.062	0.060	0.058	0.068	"H2O
Temp:	110	110	110	110	110	110	110	110	110	°F

V_{strav} 17.49 ft/sec V_{scent} 18.58 ft/sec F_p 0.941

Run:	6	Particulate Sampling Data													Fuel Weight (lb)		Temperature Data (°F)							Stack Gas Data		
Elapsed Time (min)	Gas Meter 1 (ft^3)	Gas Meter 2 (ft^3)	Sample Rate 1 (cfm)	Sample Rate 2 (cfm)	Orifice dH 1 ("H_2O)	Meter Temp 1 (°F)	Meter Vacuum 1 ("Hg)	Orifice dH 2 ("H_2O)	Meter Temp 2 (°F)	Meter Vacuum 2 ("Hg)	Dilution Tunnel (°F)	Tunnel Center dP	Pro. Rate 1	Pro. Rate 2	Scale Reading	Weight Change	Stack	Filter 1	Dryer 1	Filter 2	Dryer 2	Ambient	Avg. Surface	Draft ("H_2O)	CO_2 (%)	CO (%)
0	0.000	0.000			0.67	78	1.21	0.01	78	-0.70	110	0.065			20.0		340	84	64	83	64	74	409	-0.060	5.61	0.070
1	0.108	0.129	0.11	0.13	1.37	78	-0.74	1.11	78	-1.40	145	0.061	87	101	19.8	-0.2	349	85	63	84	63	74	410	-0.050	4.11	0.320
2	0.238	0.268	0.13	0.14	1.33	78	-0.63	1.10	78	-1.30	131	0.061	103	108	19.8	0.0	307	85	63	84	63	75	409	-0.050	1.95	0.200
3	0.372	0.407	0.13	0.14	1.47	78	-0.97	1.09	78	-1.40	117	0.062	104	106	19.5	-0.3	303	86	63	84	63	75	406	-0.060	2.42	0.470
4	0.509	0.545	0.14	0.14	1.50	78	-1.08	1.08	78	-1.50	115	0.062	106	105	19.4	-0.1	339	86	63	84	63	74	406	-0.060	6.58	0.120
5	0.645	0.683	0.14	0.14	1.50	78	-0.70	1.07	78	-1.50	115	0.063	105	104	19.3	-0.1	365	86	63	84	63	75	405	-0.060	7.87	0.070
6	0.782	0.821	0.14	0.14	1.49	78	-0.87	1.07	78	-1.40	115	0.063	105	104	19.2	-0.1	385	86	63	84	63	75	406	-0.070	8.91	0.070
7	0.917	0.957	0.14	0.14	1.46	78	-0.75	1.07	78	-1.40	116	0.063	104	103	19.0	-0.2	399	85	63	84	63	75	406	-0.070	9.78	0.070
8	1.054	1.097	0.14	0.14	1.49	78	-0.76	1.09	78	-1.50	117	0.064	105	105	18.9	-0.1	410	85	63	84	63	75	407	-0.070	9.88	0.080
9	1.188	1.236	0.13	0.14	1.48	78	-0.81	1.10	78	-1.50	116	0.063	103	105	18.8	-0.1	417	85	63	84	63	75	407	-0.070	10.13	0.070
10	1.324	1.375	0.14	0.14	1.48	78	-0.79	1.09	78	-1.40	117	0.064	104	104	18.6	-0.2	422	85	63	84	63	75	408	-0.070	10.49	0.070
11	1.459	1.514	0.14	0.14	1.45	78	-0.96	1.09	78	-1.50	118	0.064	103	104	18.5	-0.1	433	85	63	84	63	76	410	-0.070	13.67	0.050
12	1.594	1.652	0.14	0.14	1.47	78	-0.68	1.09	78	-1.60	118	0.063	104	104	18.3	-0.2	441	85	63	85	63	76	411	-0.070	13.87	0.030
13	1.728	1.791	0.13	0.14	1.44	78	-0.79	1.08	78	-1.50	119	0.063	104	105	18.2	-0.1	448	85	63	85	63	76	413	-0.070	13.05	0.080
14	1.863	1.929	0.14	0.14	1.46	78	-0.75	1.08	78	-1.50	118	0.062	105	105	18.0	-0.2	450	85	63	85	63	76	414	-0.070	12.81	0.040
15	1.997	2.067	0.13	0.14	1.46	78	-0.71	1.08	78	-1.40	120	0.063	104	104	17.9	-0.1	451	85	63	85	64	76	415	-0.070	12.98	0.040
16	2.132	2.206	0.14	0.14	1.51	78	-0.69	1.12	78	-1.40	110	0.064	103	103	17.7	-0.2	385	85	63	85	64	75	417	-0.070	13.55	0.570
17	2.269	2.346	0.14	0.14	1.48	79	-0.89	1.11	78	-1.60	108	0.064	104	104	17.7	0.0	355	85	63	85	64	75	419	-0.060	11.64	0.070
18	2.406	2.486	0.14	0.14	1.51	79	-0.66	1.11	79	-1.60	108	0.064	104	104	17.6	-0.1	337	85	64	85	64	75	419	-0.060	9.28	0.040
19	2.543	2.627	0.14	0.14	1.50	79	-0.72	1.11	79	-1.40	107	0.065	103	104	17.5	-0.1	325	85	64	85	64	76	417	-0.060	8.31	0.020
20	2.679	2.766	0.14	0.14	1.49	79	-0.83	1.10	79	-1.40	106	0.063	104	104	17.5	0.0	316	85	64	85	64	76	415	-0.060	7.88	0.020
21	2.816	2.906	0.14	0.14	1.50	79	-1.05	1.10	79	-1.60	106	0.064	104	104	17.4	-0.1	309	85	64	84	64	75	413	-0.060	7.80	0.020
22	2.952	3.047	0.14	0.14	1.48	79	-1.12	1.11	79	-1.40	105	0.065	102	103	17.3	-0.1	304	85	64	84	64	74	410	-0.060	7.89	0.020
23	3.087	3.186	0.14	0.14	1.49	79	-0.78	1.10	79	-1.30	105	0.065	101	102	17.2	-0.1	301	85	64	84	64	74	407	-0.060	8.10	0.030
24	3.224	3.326	0.14	0.14	1.47	79	-1.07	1.10	79	-1.60	105	0.064	104	104	17.2	0.0	297	84	64	84	64	74	405	-0.060	8.33	0.030
25	3.360	3.466	0.14	0.14	1.49	79	-0.84	1.10	79	-1.60	105	0.066	101	102	17.1	-0.1	295	84	64	84	64	73	402	-0.060	8.64	0.030
26	3.497	3.606	0.14	0.14	1.49	79	-0.66	1.10	79	-1.40	104	0.065	103	103	17.0	-0.1	295	84	64	84	64	73	400	-0.060	8.83	0.030
27	3.633	3.745	0.14	0.14	1.48	79	-0.88	1.10	79	-1.50	103	0.066	101	101	16.9	-0.1	294	84	64	84	64	73	398	-0.060	8.99	0.040
28	3.770	3.885	0.14	0.14	1.49	79	-0.98	1.10	79	-1.60	103	0.065	103	103	16.9	0.0	293	84	64	84	64	73	395	-0.060	9.04	0.030
29	3.905	4.025	0.14	0.14	1.48	79	-1.04	1.10	79	-1.30	104	0.065	101	103	16.8	-0.1	291	84	64	84	64	73	393	-0.060	9.15	0.030
30	4.041	4.164	0.14	0.14	1.49	79	-0.67	1.10	79	-1.30	103	0.065	102	102	16.7	-0.1	290	84	64	84	65	73	391	-0.060	9.34	0.040
31	4.177	4.303	0.14	0.14	1.46	79	-0.98	1.11	79	-1.50	103	0.065	102	102	16.6	-0.1	289	84	64	84	65	74	388	-0.060	9.48	0.040
32	4.313	4.444	0.14	0.14	1.49	79	-1.11	1.10	79	-1.30	103	0.064	103	104	16.6	0.0	289	84	64	84	65	74	386	-0.050	9.71	0.040
33	4.449	4.583	0.14	0.14	1.47	79	-1.11	1.09	79	-1.50	103	0.066	101	101	16.5	-0.1	288	84	64	84	65	74	383	-0.050	9.91	0.050
34	4.585	4.722	0.14	0.14	1.48	79	-0.86	1.09	79	-1.60	103	0.066	101	101	16.4	-0.1	287	84	64	84	65	73	381	-0.050	10.02	0.050
35	4.721	4.862	0.14	0.14	1.48	79	-0.72	1.09	79	-1.40	102	0.068	99	100	16.3	-0.1	287	84	64	84	65	73	378	-0.050	10.14	0.050
36	4.857	5.001	0.14	0.14	1.47	79	-0.65	1.10	79	-1.30	102	0.066	101	101	16.3	0.0	285	84	64	84	65	73	376	-0.050	10.42	0.050
37	4.993	5.140	0.14	0.14	1.47	79	-0.95	1.10	79	-1.60	102	0.066	101	101	16.2	-0.1	286	84	64	84	65	73	374	-0.050	10.49	0.050
38	5.128	5.280	0.14	0.14	1.47	79	-1.11	1.09	79	-1.60	102	0.067	99	101	16.1	-0.1	285	84	64	84	65	73	372	-0.050	10.41	0.050
39	5.264	5.419	0.14	0.14	1.48	79	-1.09	1.09	79	-1.30	102	0.066	101	101	16.0	-0.1	284	84	64	83	65	73	370	-0.050	10.45	0.050
40	5.400	5.558	0.14	0.14	1.46	79	-1.05	1.09	79	-1.30	102	0.066	101	101	15.9	-0.1	283	84	64	83	65	73	368	-0.050	10.52	0.050
41	5.536	5.698	0.14	0.14	1.48	79	-1.12	1.09	79	-1.40	101	0.067	100	101	15.9	0.0	282	84	64	83	65	73	366	-0.050	10.54	0.050
42	5.672	5.837	0.14	0.14	1.47	79	-0.68	1.10	79	-1.30	101	0.065	102	102	15.8	-0.1	281	84	64	83	65	73	364	-0.050	10.57	0.050

File - Run 6 Med 3053 Emissions, Tab - Data Entry

Run:	6	Particulate Sampling Data													Fuel Weight (lb)		Temperature Data (°F)							Stack Gas Data		
Elapsed Time (min)	Gas Meter 1 (ft^3)	Gas Meter 2 (ft^3)	Sample Rate 1 (cfm)	Sample Rate 2 (cfm)	Orifice dH 1 ("H_2O)	Meter Temp 1 (°F)	Meter Vacuum 1 ("Hg)	Orifice dH 2 ("H_2O)	Meter Temp 2 (°F)	Meter Vacuum 2 ("Hg)	Dilution Tunnel (°F)	Tunnel Center dP	Pro. Rate 1	Pro. Rate 2	Scale Reading	Weight Change	Stack	Filter 1	Dryer 1	Filter 2	Dryer 2	Ambient	Avg. Surface	Draft ("H_2O)	CO_2 (%)	CO (%)
43	5.808	5.976	0.14	0.14	1.48	79	-0.71	1.10	79	-1.60	101	0.065	102	102	15.7	-0.1	281	84	64	83	65	73	363	-0.050	10.61	0.050
44	5.944	6.116	0.14	0.14	1.48	79	-0.72	1.09	79	-1.30	101	0.064	102	103	15.6	-0.1	280	84	64	83	65	73	361	-0.050	10.54	0.050
45	6.079	6.255	0.14	0.14	1.47	79	-0.82	1.09	79	-1.50	101	0.065	101	102	15.5	-0.1	280	84	64	83	65	73	359	-0.050	10.56	0.050
46	6.215	6.394	0.14	0.14	1.48	80	-1.12	1.09	79	-1.40	101	0.065	101	102	15.5	0.0	278	84	64	83	65	73	358	-0.050	10.64	0.050
47	6.350	6.534	0.14	0.14	1.46	80	-0.99	1.09	79	-1.50	101	0.067	99	101	15.4	-0.1	277	84	64	83	65	72	356	-0.050	10.73	0.050
48	6.486	6.672	0.14	0.14	1.48	80	-0.63	1.09	79	-1.50	100	0.065	101	101	15.3	-0.1	276	84	64	83	65	73	355	-0.050	10.77	0.050
49	6.622	6.812	0.14	0.14	1.45	80	-0.79	1.08	79	-1.60	101	0.066	101	102	15.2	-0.1	276	84	65	83	65	73	354	-0.050	10.82	0.050
50	6.757	6.951	0.14	0.14	1.48	80	-0.66	1.09	79	-1.40	100	0.065	101	102	15.2	0.0	276	84	65	83	65	73	353	-0.050	10.80	0.050
51	6.893	7.090	0.14	0.14	1.46	80	-0.64	1.09	80	-1.30	100	0.066	101	101	15.1	-0.1	275	84	65	83	65	73	351	-0.050	10.84	0.050
52	7.028	7.230	0.14	0.14	1.47	80	-0.62	1.09	80	-1.30	100	0.066	100	101	15.0	-0.1	275	84	65	83	65	73	350	-0.050	10.89	0.050
53	7.164	7.369	0.14	0.14	1.45	80	-0.63	1.10	80	-1.40	100	0.066	101	101	14.9	-0.1	274	84	65	83	65	73	349	-0.050	10.92	0.050
54	7.300	7.507	0.14	0.14	1.48	80	-0.64	1.09	80	-1.40	99	0.066	101	100	14.9	0.0	272	84	65	84	65	72	348	-0.050	10.85	0.050
55	7.436	7.647	0.14	0.14	1.48	80	-1.11	1.09	80	-1.60	99	0.066	101	101	14.8	-0.1	274	84	65	84	65	72	347	-0.050	10.87	0.050
56	7.571	7.786	0.14	0.14	1.46	80	-0.88	1.09	80	-1.40	99	0.065	101	101	14.7	-0.1	273	84	65	84	65	72	346	-0.050	10.84	0.050
57	7.708	7.925	0.14	0.14	1.48	80	-1.09	1.09	80	-1.40	99	0.065	102	101	14.6	-0.1	272	84	65	84	65	72	345	-0.050	10.81	0.050
58	7.843	8.065	0.14	0.14	1.47	80	-0.91	1.09	80	-1.60	99	0.065	101	102	14.6	0.0	271	84	65	84	65	72	345	-0.050	10.87	0.050
59	7.979	8.204	0.14	0.14	1.48	80	-1.11	1.10	80	-1.60	99	0.066	101	100	14.5	-0.1	270	84	65	85	65	72	344	-0.050	10.90	0.050
60	8.114	8.343	0.14	0.14	1.47	80	-0.64	1.10	80	-1.40	99	0.065	101	101	14.4	-0.1	271	84	65	85	65	72	343	-0.050	10.94	0.050
61	8.252	8.483	0.14	0.14	1.50	80	-0.85	1.09	80	-1.60	98	0.064	103	103	14.3	-0.1	271	84	65	85	65	73	343	-0.050	10.98	0.050
62	8.389	8.622	0.14	0.14	1.50	80	-1.10	1.09	80	-1.60	98	0.065	102	101	14.3	0.0	271	84	65	85	65	73	342	-0.050	10.96	0.050
63	8.526	8.761	0.14	0.14	1.49	80	-0.64	1.09	80	-1.50	98	0.066	101	100	14.2	-0.1	271	85	65	86	65	73	342	-0.050	11.00	0.050
64	8.663	8.901	0.14	0.14	1.48	80	-1.10	1.09	80	-1.60	98	0.066	101	101	14.1	-0.1	271	85	65	86	65	74	341	-0.050	10.90	0.050
65	8.799	9.040	0.14	0.14	1.48	80	-0.96	1.09	80	-1.60	97	0.064	102	102	14.0	-0.1	271	86	65	86	65	73	341	-0.050	10.85	0.050
66	8.935	9.179	0.14	0.14	1.49	80	-0.91	1.10	80	-1.60	98	0.065	101	101	14.0	0.0	270	87	65	86	65	73	340	-0.050	10.91	0.050
67	9.072	9.319	0.14	0.14	1.48	80	-0.64	1.09	80	-1.40	98	0.064	103	103	13.9	-0.1	269	87	65	87	65	73	340	-0.050	10.88	0.050
68	9.209	9.458	0.14	0.14	1.50	80	-0.88	1.09	80	-1.60	97	0.065	102	101	13.8	-0.1	270	87	65	87	65	73	339	-0.050	10.89	0.050
69	9.346	9.598	0.14	0.14	1.49	80	-0.95	1.10	80	-1.60	98	0.065	102	102	13.7	-0.1	269	87	65	87	65	72	339	-0.050	10.89	0.050
70	9.482	9.737	0.14	0.14	1.48	80	-0.62	1.10	80	-1.40	97	0.065	101	101	13.7	0.0	269	88	65	87	65	73	338	-0.050	10.90	0.050
71	9.619	9.876	0.14	0.14	1.50	80	-0.67	1.09	80	-1.40	97	0.064	103	102	13.6	-0.1	269	88	65	87	65	72	338	-0.050	10.93	0.050
72	9.756	10.016	0.14	0.14	1.48	80	-0.62	1.10	80	-1.40	98	0.065	102	102	13.5	-0.1	268	88	65	87	65	73	338	-0.050	10.89	0.040
73	9.892	10.156	0.14	0.14	1.50	80	-0.92	1.09	80	-1.40	97	0.065	101	102	13.5	0.0	269	88	65	88	65	72	337	-0.050	10.97	0.050
74	10.030	10.295	0.14	0.14	1.49	80	-1.10	1.09	80	-1.60	97	0.065	103	101	13.4	-0.1	269	88	65	88	65	72	337	-0.050	11.04	0.040
75	10.166	10.435	0.14	0.14	1.49	80	-1.03	1.10	80	-1.40	97	0.065	101	102	13.3	-0.1	268	88	65	88	65	72	337	-0.050	11.07	0.040
76	10.303	10.574	0.14	0.14	1.50	80	-0.80	1.10	80	-1.60	97	0.065	102	101	13.3	0.0	269	87	65	88	65	72	337	-0.050	11.16	0.050
77	10.440	10.714	0.14	0.14	1.48	80	-0.63	1.10	80	-1.60	97	0.068	100	100	13.2	-0.1	270	87	65	88	65	72	337	-0.050	11.28	0.050
78	10.576	10.853	0.14	0.14	1.50	80	-0.69	1.10	80	-1.50	96	0.064	102	102	13.1	-0.1	270	87	65	87	65	72	337	-0.050	11.43	0.050
79	10.714	10.993	0.14	0.14	1.49	80	-0.62	1.09	80	-1.50	96	0.066	102	101	13.1	0.0	271	87	65	87	65	72	337	-0.050	11.62	0.050
80	10.850	11.133	0.14	0.14	1.49	80	-0.83	1.09	80	-1.60	96	0.067	99	100	13.0	-0.1	271	87	65	87	65	73	337	-0.050	11.76	0.060
81	10.988	11.272	0.14	0.14	1.49	80	-1.10	1.10	80	-1.40	96	0.065	102	101	12.9	-0.1	273	87	65	87	65	72	338	-0.050	11.95	0.060
82	11.123	11.413	0.14	0.14	1.48	80	-0.98	1.09	80	-1.40	97	0.064	101	103	12.8	-0.1	274	87	65	87	65	72	339	-0.050	12.07	0.070
83	11.260	11.552	0.14	0.14	1.50	80	-1.07	1.10	80	-1.60	96	0.065	102	101	12.8	0.0	275	86	64	87	65	72	339	-0.050	12.08	0.070
84	11.398	11.691	0.14	0.14	1.48	80	-1.09	1.10	80	-1.60	97	0.065	103	101	12.7	-0.1	276	86	64	87	65	72	340	-0.050	11.84	0.090
85	11.534	11.832	0.14	0.14	1.50	80	-0.62	1.10	80	-1.60	97	0.064	102	103	12.6	-0.1	275	86	64	86	65	72	341	-0.050	11.69	0.090
86	11.672	11.971	0.14	0.14	1.49	80	-0.78	1.09	80	-1.60	96	0.065	102	101	12.5	-0.1	276	86	64	86	65	72	341	-0.050	11.39	0.080
87	11.808	12.111	0.14	0.14	1.49	80	-1.01	1.09	80	-1.40	97	0.065	101	102	12.5	0.0	275	86	64	86	65	72	342	-0.050	11.11	0.070
88	11.944	12.251	0.14	0.14	1.50	80	-1.03	1.10	80	-1.40	97	0.066	100	101	12.4	-0.1	274	86	64	86	65	72	341	-0.050	10.90	0.060
89	12.081	12.390	0.14	0.14	1.48	80	-0.88	1.10	80	-1.40	96	0.065	102	101	12.3	-0.1	272	86	64	86	65	71	341	-0.050	10.68	0.050
90	12.218	12.530	0.14	0.14	1.50	80	-1.04	1.10	80	-1.40	96	0.065	102	102	12.3	0.0	271	86	65	86	65	72	341	-0.050	10.55	0.050
91	12.355	12.669	0.14	0.14	1.49	80	-1.10	1.10	80	-1.60	96	0.065	102	101	12.2	-0.1	270	86	65	86	65	71	340	-0.050	10.49	0.050
92	12.491	12.809	0.14	0.14	1.49	80	-1.02	1.09	80	-1.60	96	0.065	101	102	12.2	0.0	269	85	65	85	65	71	339	-0.050	10.50	0.050
93	12.629	12.949	0.14	0.14	1.50	80	-1.10	1.09	80	-1.40	96	0.067	101	100	12.1	-0.1	268	85	65	85	65	72	339	-0.050	10.47	0.040
94	12.765	13.088	0.14	0.14	1.48	80	-1.01	1.10	80	-1.50	95	0.067	99	99	12.0	-0.1	267	85	65	85	65	72	338	-0.050	10.44	0.040
95	12.902	13.229	0.14	0.14	1.49	80	-0.92	1.10	80	-1.70	95	0.066	101	102	12.0	0.0	266	85	65	85	65	72	338	-0.050	10.47	0.040
96	13.039	13.368	0.14	0.14	1.50	80	-0.97	1.10	80	-1.50	95	0.064	102	102	11.9	-0.1	266	85	65	85	65	72	337	-0.050	10.48	0.040
97	13.175	13.507	0.14	0.14	1.49	80	-1.10	1.10	80	-1.60	95	0.066	101	101	11.8	-0.1	265	85	65	85	65	71	337	-0.050	10.51	0.040

Run:	6	Particulate Sampling Data													Fuel Weight (lb)		Temperature Data (°F)							Stack Gas Data		
Elapsed Time (min)	Gas Meter 1 (ft^3)	Gas Meter 2 (ft^3)	Sample Rate 1 (cfm)	Sample Rate 2 (cfm)	Orifice dH 1 ("H_2O)	Meter Temp 1 (°F)	Meter Vacuum 1 ("Hg)	Orifice dH 2 ("H_2O)	Meter Temp 2 (°F)	Meter Vacuum 2 ("Hg)	Dilution Tunnel (°F)	Tunnel Center dP	Pro. Rate 1	Pro. Rate 2	Scale Reading	Weight Change	Stack	Filter 1	Dryer 1	Filter 2	Dryer 2	Ambient	Avg. Surface	Draft ("H_2O)	CO_2 (%)	CO (%)
98	13.313	13.648	0.14	0.14	1.49	80	-0.77	1.10	80	-1.40	95	0.067	101	101	11.8	0.0	264	85	65	85	65	72	336	-0.050	10.56	0.040
99	13.449	13.787	0.14	0.14	1.48	80	-1.05	1.09	80	-1.40	95	0.066	100	100	11.7	-0.1	264	85	65	85	65	72	336	-0.050	10.59	0.040
100	13.586	13.926	0.14	0.14	1.50	80	-1.07	1.09	80	-1.50	95	0.065	102	101	11.7	0.0	263	85	65	85	65	72	336	-0.050	10.63	0.040
101	13.723	14.067	0.14	0.14	1.49	80	-0.98	1.09	80	-1.60	95	0.064	102	103	11.6	-0.1	263	85	65	85	65	71	335	-0.050	10.75	0.040
102	13.859	14.206	0.14	0.14	1.49	80	-0.66	1.10	80	-1.40	95	0.065	101	101	11.5	-0.1	263	85	65	85	65	71	335	-0.050	10.74	0.050
103	13.997	14.345	0.14	0.14	1.48	80	-0.78	1.10	80	-1.40	95	0.065	102	101	11.5	0.0	262	85	65	85	65	72	335	-0.050	10.79	0.050
104	14.133	14.485	0.14	0.14	1.48	80	-0.98	1.09	80	-1.50	95	0.065	101	102	11.4	-0.1	262	85	65	85	65	71	335	-0.050	10.80	0.050
105	14.269	14.625	0.14	0.14	1.50	80	-0.63	1.09	80	-1.60	95	0.065	101	102	11.3	-0.1	261	85	65	85	65	71	335	-0.050	10.84	0.050
106	14.407	14.765	0.14	0.14	1.48	80	-0.97	1.09	80	-1.60	95	0.065	102	102	11.3	0.0	261	85	65	85	65	71	335	-0.050	10.88	0.050
107	14.543	14.904	0.14	0.14	1.50	80	-1.10	1.10	80	-1.60	95	0.065	101	101	11.2	-0.1	262	85	65	85	65	71	335	-0.050	10.92	0.050
108	14.681	15.044	0.14	0.14	1.48	80	-1.10	1.10	80	-1.60	95	0.065	102	102	11.2	0.0	262	85	65	85	65	71	335	-0.050	10.98	0.050
109	14.817	15.183	0.14	0.14	1.49	80	-0.62	1.10	80	-1.40	95	0.065	101	101	11.1	-0.1	260	85	65	85	65	71	335	-0.050	11.01	0.050
110	14.954	15.323	0.14	0.14	1.50	80	-0.62	1.10	80	-1.40	94	0.065	102	102	11.0	-0.1	261	85	65	85	65	71	335	-0.050	11.01	0.050
111	15.091	15.463	0.14	0.14	1.48	80	-1.06	1.10	80	-1.60	94	0.066	101	101	11.0	0.0	261	85	65	85	65	71	335	-0.050	11.08	0.050
112	15.227	15.603	0.14	0.14	1.50	80	-0.92	1.09	80	-1.60	94	0.067	99	100	10.9	-0.1	261	85	65	85	65	71	335	-0.050	11.12	0.050
113	15.365	15.742	0.14	0.14	1.50	80	-0.86	1.10	80	-1.60	94	0.066	102	100	10.8	-0.1	261	85	65	85	65	71	335	-0.050	11.18	0.050
114	15.501	15.882	0.14	0.14	1.49	80	-0.72	1.09	80	-1.60	94	0.065	101	102	10.8	0.0	261	85	65	85	65	71	336	-0.050	11.15	0.050
115	15.638	16.022	0.14	0.14	1.49	80	-0.62	1.10	80	-1.40	94	0.065	102	102	10.7	-0.1	261	85	65	85	65	71	336	-0.050	11.16	0.050
116	15.775	16.161	0.14	0.14	1.48	80	-0.61	1.10	80	-1.50	94	0.067	100	99	10.7	0.0	261	85	65	85	65	71	336	-0.050	11.17	0.050
117	15.912	16.301	0.14	0.14	1.49	80	-1.06	1.09	80	-1.60	94	0.066	101	101	10.6	-0.1	260	85	65	85	65	71	336	-0.050	11.17	0.050
118	16.049	16.441	0.14	0.14	1.50	80	-0.63	1.09	80	-1.40	94	0.065	102	102	10.6	0.0	260	85	65	85	65	71	336	-0.050	11.17	0.050
119	16.185	16.580	0.14	0.14	1.50	80	-0.62	1.10	80	-1.40	94	0.065	101	101	10.5	-0.1	261	85	65	85	65	70	336	-0.050	11.20	0.050
120	16.322	16.720	0.14	0.14	1.48	80	-0.70	1.10	80	-1.40	94	0.066	101	101	10.4	-0.1	261	85	65	85	65	71	336	-0.050	11.26	0.050
121	16.458	16.860	0.14	0.14	1.48	80	-0.62	1.10	80	-1.40	94	0.066	100	101	10.4	0.0	261	85	65	85	65	72	337	-0.050	11.28	0.050
122	16.595	16.999	0.14	0.14	1.49	80	-0.62	1.10	80	-1.40	94	0.065	102	101	10.3	-0.1	260	85	65	85	65	72	337	-0.050	11.39	0.050
123	16.733	17.139	0.14	0.14	1.48	80	-0.69	1.08	80	-1.60	94	0.068	100	99	10.2	-0.1	260	85	65	85	65	72	337	-0.050	11.44	0.050
124	16.869	17.279	0.14	0.14	1.49	80	-0.95	1.09	80	-1.60	94	0.065	101	102	10.2	0.0	260	85	65	85	65	72	338	-0.050	11.47	0.050
125	17.007	17.418	0.14	0.14	1.49	80	-0.85	1.09	80	-1.60	94	0.065	102	101	10.1	-0.1	262	85	65	85	65	73	338	-0.050	11.60	0.050
126	17.143	17.559	0.14	0.14	1.49	80	-0.82	1.10	80	-1.50	93	0.066	100	101	10.1	0.0	263	85	65	85	65	72	339	-0.050	11.71	0.050
127	17.279	17.698	0.14	0.14	1.49	80	-0.73	1.10	80	-1.60	94	0.065	101	101	10.0	-0.1	262	85	65	85	65	72	339	-0.050	11.81	0.050
128	17.416	17.837	0.14	0.14	1.47	80	-0.85	1.10	80	-1.60	94	0.065	102	101	9.9	-0.1	263	85	65	85	65	72	339	-0.050	11.97	0.050
129	17.552	17.977	0.14	0.14	1.49	80	-1.10	1.09	80	-1.50	94	0.067	99	100	9.9	0.0	262	85	65	85	65	73	339	-0.050	12.30	0.040
130	17.690	18.117	0.14	0.14	1.49	80	-0.64	1.09	80	-1.60	94	0.065	102	102	9.8	-0.1	263	85	65	85	65	73	339	-0.050	12.73	0.040
131	17.826	18.256	0.14	0.14	1.48	80	-0.67	1.09	80	-1.40	94	0.065	101	101	9.7	-0.1	261	85	65	85	65	73	339	-0.050	13.54	0.050
132	17.963	18.396	0.14	0.14	1.49	80	-0.61	1.10	80	-1.60	93	0.063	103	103	9.6	-0.1	262	85	65	85	65	73	341	-0.050	13.26	0.070
133	18.099	18.535	0.14	0.14	1.48	80	-0.61	1.09	80	-1.50	94	0.066	100	100	9.6	0.0	264	85	65	85	65	73	343	-0.050	13.45	0.110
134	18.236	18.674	0.14	0.14	1.49	80	-1.09	1.10	80	-1.40	94	0.064	102	102	9.5	-0.1	266	85	65	85	65	73	345	-0.050	13.29	0.110
135	18.373	18.814	0.14	0.14	1.49	80	-0.72	1.10	80	-1.50	93	0.066	101	101	9.5	0.0	268	85	65	85	65	72	347	-0.050	13.14	0.120
136	18.509	18.954	0.14	0.14	1.48	80	-1.04	1.09	80	-1.60	94	0.066	100	101	9.4	-0.1	269	85	65	85	65	73	349	-0.050	13.00	0.120
137	18.646	19.093	0.14	0.14	1.49	80	-0.62	1.09	80	-1.40	93	0.065	101	101	9.3	-0.1	270	85	65	85	65	73	350	-0.050	12.87	0.120
138	18.782	19.232	0.14	0.14	1.48	80	-0.73	1.09	80	-1.40	94	0.064	102	102	9.3	0.0	270	85	65	85	65	73	351	-0.050	12.86	0.120
139	18.918	19.372	0.14	0.14	1.49	80	-0.78	1.09	80	-1.50	94	0.064	102	102	9.2	-0.1	271	85	65	85	65	73	352	-0.050	12.58	0.100
140	19.055	19.511	0.14	0.14	1.48	80	-0.76	1.10	80	-1.50	94	0.066	101	100	9.1	-0.1	271	85	65	85	65	73	352	-0.050	12.42	0.090
141	19.192	19.651	0.14	0.14	1.49	80	-0.64	1.10	80	-1.60	94	0.066	101	101	9.1	0.0	270	85	65	85	65	73	353	-0.050	12.44	0.090
142	19.329	19.791	0.14	0.14	1.49	80	-0.84	1.09	80	-1.60	94	0.066	101	101	9.0	-0.1	271	85	65	85	65	73	353	-0.050	12.56	0.080
143	19.465	19.930	0.14	0.14	1.49	80	-1.01	1.09	80	-1.40	94	0.066	100	100	9.0	0.0	271	85	65	85	65	73	353	-0.050	12.66	0.080
144	19.602	20.069	0.14	0.14	1.50	80	-0.69	1.09	80	-1.50	94	0.066	101	100	8.9	-0.1	271	85	65	85	65	73	353	-0.050	12.93	0.080
145	19.738	20.209	0.14	0.14	1.47	80	-1.09	1.09	80	-1.40	93	0.067	99	100	8.8	-0.1	272	85	65	85	65	73	354	-0.050	13.21	0.090
146	19.874	20.349	0.14	0.14	1.49	80	-0.77	1.10	80	-1.60	94	0.067	99	100	8.8	0.0	272	85	65	85	65	73	355	-0.050	13.31	0.080
147	20.012	20.488	0.14	0.14	1.47	80	-0.91	1.10	80	-1.40	93	0.067	101	99	8.7	-0.1	272	85	65	85	65	73	355	-0.050	13.54	0.080
148	20.148	20.628	0.14	0.14	1.49	80	-1.08	1.09	80	-1.50	94	0.066	100	101	8.7	0.0	273	85	65	85	65	73	356	-0.050	13.80	0.080
149	20.285	20.768	0.14	0.14	1.48	80	-0.86	1.09	80	-1.60	93	0.065	101	101	8.6	-0.1	273	85	65	85	65	73	356	-0.050	14.21	0.090
150	20.421	20.907	0.14	0.14	1.48	80	-0.67	1.09	80	-1.60	95	0.065	101	101	8.5	-0.1	274	85	65	85	65	73	357	-0.050	14.55	0.110
151	20.558	21.047	0.14	0.14	1.50	80	-0.91	1.09	80	-1.60	93	0.065	101	101	8.4	-0.1	274	85	65	85	65	73	358	-0.050	14.84	0.110
152	20.694	21.187	0.14	0.14	1.47	80	-0.75	1.10	80	-1.50	94	0.066	102	102	8.4	0.0	275	85	65	85	65	73	360	-0.050	15.07	0.110

Run:	6	Particulate Sampling Data													Fuel Weight (lb)		Temperature Data (°F)							Stack Gas Data		
Elapsed Time (min)	Gas Meter 1 (ft^3)	Gas Meter 2 (ft^3)	Sample Rate 1 (cfm)	Sample Rate 2 (cfm)	Orifice dH 1 ("H_2O)	Meter Temp 1 (°F)	Meter Vacuum 1 ("Hg)	Orifice dH 2 ("H_2O)	Meter Temp 2 (°F)	Meter Vacuum 2 ("Hg)	Dilution Tunnel (°F)	Tunnel Center dP	Pro. Rate 1	Pro. Rate 2	Scale Reading	Weight Change	Stack	Filter 1	Dryer 1	Filter 2	Dryer 2	Ambient	Avg. Surface	Draft ("H_2O)	CO_2 (%)	CO (%)
153	20.831	21.326	0.14	0.14	1.49	80	-0.69	1.10	80	-1.40	94	0.064	102	102	8.3	-0.1	276	85	65	85	65	73	359	-0.050	15.44	0.100
154	20.968	21.466	0.14	0.14	1.49	80	-1.05	1.09	80	-1.60	94	0.065	102	102	8.2	-0.1	275	85	65	85	65	74	359	-0.050	15.52	0.310
155	21.104	21.605	0.14	0.14	1.48	80	-1.03	1.09	80	-1.40	93	0.066	100	100	8.1	-0.1	273	85	65	85	65	73	358	-0.050	15.60	0.280
156	21.241	21.745	0.14	0.14	1.49	80	-0.70	1.09	80	-1.40	93	0.066	101	101	8.0	-0.1	271	85	65	85	65	73	358	-0.050	15.66	0.150
157	21.377	21.885	0.14	0.14	1.48	80	-1.03	1.10	80	-1.60	94	0.067	99	100	8.0	0.0	270	85	65	85	65	73	358	-0.050	15.78	0.210
158	21.513	22.024	0.14	0.14	1.49	80	-1.01	1.10	80	-1.60	93	0.065	101	101	7.9	-0.1	269	85	65	85	65	73	358	-0.050	15.65	0.330
159	21.650	22.163	0.14	0.14	1.48	80	-1.05	1.10	80	-1.60	93	0.066	101	100	7.8	-0.1	265	85	65	85	65	73	358	-0.050	15.27	0.080
160	21.786	22.303	0.14	0.14	1.49	80	-1.02	1.10	80	-1.60	93	0.066	100	101	7.8	0.0	263	85	65	85	65	73	358	-0.050	14.62	0.010
161	21.924	22.443	0.14	0.14	1.50	80	-0.99	1.09	80	-1.40	93	0.065	102	101	7.7	-0.1	261	85	65	85	65	73	358	-0.050	13.97	0.010
162	22.059	22.582	0.14	0.14	1.48	80	-1.00	1.09	80	-1.40	93	0.065	100	101	7.6	-0.1	257	85	65	85	65	73	358	-0.050	13.58	0.010
163	22.196	22.722	0.14	0.14	1.49	80	-0.67	1.10	80	-1.50	93	0.066	101	101	7.6	0.0	255	85	65	85	65	73	360	-0.050	13.29	0.040
164	22.333	22.862	0.14	0.14	1.48	80	-0.80	1.10	80	-1.60	93	0.066	101	101	7.5	-0.1	257	85	65	85	65	73	363	-0.050	13.42	0.090
165	22.469	23.001	0.14	0.14	1.49	80	-0.82	1.10	80	-1.50	93	0.066	100	100	7.5	0.0	259	85	65	85	65	73	365	-0.050	12.82	0.100
166	22.606	23.141	0.14	0.14	1.49	80	-0.68	1.10	80	-1.40	93	0.066	101	101	7.5	0.0	260	85	65	85	65	73	366	-0.050	12.21	0.110
167	22.742	23.281	0.14	0.14	1.48	80	-0.62	1.09	80	-1.40	93	0.067	99	100	7.4	-0.1	260	85	65	85	65	73	366	-0.050	11.71	0.090
168	22.880	23.420	0.14	0.14	1.48	80	-0.99	1.09	80	-1.50	93	0.066	101	100	7.4	0.0	259	85	65	85	65	73	366	-0.050	11.46	0.080
169	23.015	23.559	0.14	0.14	1.48	80	-0.94	1.10	80	-1.40	93	0.065	100	101	7.3	-0.1	257	85	65	85	65	73	366	-0.050	11.29	0.060
170	23.152	23.699	0.14	0.14	1.49	80	-1.02	1.09	80	-1.60	93	0.065	101	101	7.3	0.0	256	85	65	85	65	73	365	-0.050	11.20	0.050
171	23.289	23.838	0.14	0.14	1.47	80	-0.65	1.10	80	-1.40	93	0.066	101	100	7.2	-0.1	255	85	65	85	65	74	364	-0.050	11.03	0.050
172	23.425	23.978	0.14	0.14	1.50	80	-0.96	1.10	80	-1.50	93	0.066	100	101	7.2	0.0	253	85	65	85	65	73	363	-0.050	11.03	0.050
173	23.562	24.118	0.14	0.14	1.49	80	-1.09	1.09	80	-1.60	93	0.066	101	101	7.1	-0.1	252	85	65	85	65	73	362	-0.050	10.97	0.040
174	23.698	24.257	0.14	0.14	1.48	80	-1.02	1.09	80	-1.40	93	0.066	100	100	7.1	0.0	252	85	65	85	65	73	361	-0.050	10.97	0.040
175	23.835	24.397	0.14	0.14	1.50	80	-0.66	1.09	80	-1.60	93	0.068	99	99	7.1	0.0	250	85	65	85	65	73	360	-0.050	10.95	0.040
176	23.972	24.537	0.14	0.14	1.47	80	-0.81	1.09	80	-1.60	93	0.067	100	100	7.0	-0.1	249	85	65	85	65	73	359	-0.050	10.94	0.040
177	24.108	24.676	0.14	0.14	1.49	80	-0.98	1.10	80	-1.60	93	0.065	101	101	7.0	0.0	248	85	65	85	65	73	358	-0.050	10.91	0.030
178	24.245	24.816	0.14	0.14	1.48	80	-0.70	1.10	80	-1.50	92	0.066	101	101	6.9	-0.1	246	85	65	85	64	73	358	-0.050	10.89	0.030
179	24.381	24.956	0.14	0.14	1.49	80	-0.63	1.10	80	-1.40	92	0.065	101	101	6.9	0.0	245	85	65	85	64	73	357	-0.040	10.85	0.030
180	24.518	25.096	0.14	0.14	1.47	80	-0.61	1.09	80	-1.50	92	0.066	101	101	6.9	0.0	243	85	65	85	64	73	356	-0.050	10.74	0.030
181	24.654	25.235	0.14	0.14	1.48	80	-0.73	1.09	80	-1.60	93	0.065	101	101	6.8	-0.1	242	85	65	85	64	74	355	-0.040	10.73	0.030
182	24.791	25.375	0.14	0.14	1.50	80	-1.06	1.10	80	-1.60	92	0.065	101	101	6.8	0.0	241	85	65	85	64	73	355	-0.040	10.68	0.030
183	24.928	25.514	0.14	0.14	1.47	80	-1.10	1.10	80	-1.60	92	0.065	101	101	6.7	-0.1	240	85	65	85	64	73	354	-0.040	10.59	0.030
184	25.064	25.653	0.14	0.14	1.49	80	-1.07	1.10	80	-1.60	92	0.065	101	101	6.7	0.0	239	85	65	85	64	73	354	-0.040	10.49	0.030
185	25.201	25.793	0.14	0.14	1.49	80	-1.09	1.10	80	-1.60	92	0.067	100	100	6.7	0.0	238	85	65	85	64	74	353	-0.040	10.36	0.030
186	25.337	25.933	0.14	0.14	1.48	80	-0.99	1.09	80	-1.60	92	0.066	100	101	6.6	-0.1	237	85	65	85	64	73	353	-0.040	10.30	0.030
187	25.474	26.072	0.14	0.14	1.49	80	-0.64	1.09	80	-1.40	92	0.066	101	100	6.6	0.0	235	85	65	85	64	74	352	-0.040	10.19	0.030
188	25.610	26.212	0.14	0.14	1.48	80	-1.07	1.10	80	-1.60	92	0.065	101	101	6.6	0.0	234	85	65	85	64	73	352	-0.040	10.14	0.030
189	25.746	26.352	0.14	0.14	1.49	80	-0.62	1.10	80	-1.60	92	0.066	100	101	6.5	-0.1	233	85	65	85	64	74	351	-0.040	10.04	0.030
190	25.883	26.491	0.14	0.14	1.48	80	-0.61	1.10	80	-1.60	92	0.066	101	100	6.5	0.0	231	85	65	85	64	73	351	-0.040	10.00	0.030
191	26.020	26.630	0.14	0.14	1.49	80	-0.83	1.10	80	-1.40	92	0.066	101	100	6.5	0.0	231	85	65	85	64	74	351	-0.040	9.92	0.030
192	26.157	26.770	0.14	0.14	1.49	80	-0.96	1.09	80	-1.30	92	0.066	101	101	6.4	-0.1	231	85	65	85	64	73	350	-0.040	9.93	0.030
193	26.293	26.910	0.14	0.14	1.49	80	-1.06	1.09	80	-1.60	92	0.066	100	101	6.4	0.0	229	85	65	85	64	74	350	-0.040	9.90	0.030
194	26.429	27.049	0.14	0.14	1.49	80	-0.98	1.10	80	-1.60	91	0.065	101	101	6.4	0.0	228	85	65	85	64	74	350	-0.040	9.90	0.030
195	26.566	27.189	0.14	0.14	1.48	80	-0.87	1.10	80	-1.50	92	0.065	101	101	6.4	0.0	227	85	65	85	64	74	349	-0.040	9.90	0.030
196	26.702	27.328	0.14	0.14	1.49	80	-1.08	1.09	80	-1.30	91	0.065	101	101	6.3	-0.1	226	85	64	85	64	75	349	-0.040	9.91	0.030
197	26.839	27.468	0.14	0.14	1.49	80	-1.08	1.10	80	-1.40	92	0.065	101	101	6.3	0.0	225	85	64	85	64	75	348	-0.040	9.86	0.030
198	26.975	27.608	0.14	0.14	1.48	80	-1.02	1.09	80	-1.40	91	0.065	101	101	6.3	0.0	224	85	64	85	64	75	348	-0.040	9.88	0.030
199	27.113	27.747	0.14	0.14	1.48	80	-0.98	1.09	80	-1.50	91	0.067	100	99	6.2	-0.1	223	85	64	85	64	75	348	-0.040	9.88	0.030
200	27.249	27.887	0.14	0.14	1.48	80	-1.01	1.10	80	-1.60	91	0.067	99	100	6.2	0.0	222	85	64	85	64	75	348	-0.040	9.92	0.030
201	27.385	28.026	0.14	0.14	1.49	80	-0.98	1.10	80	-1.50	91	0.066	100	100	6.2	0.0	222	85	64	85	64	76	347	-0.040	9.90	0.030
202	27.522	28.166	0.14	0.14	1.47	80	-1.09	1.10	80	-1.60	91	0.066	101	100	6.1	-0.1	221	85	64	85	64	76	347	-0.040	10.01	0.030
203	27.658	28.305	0.14	0.14	1.50	80	-1.06	1.10	80	-1.60	91	0.066	100	100	6.1	0.0	221	85	64	85	64	75	347	-0.040	9.98	0.030
204	27.795	28.445	0.14	0.14	1.49	80	-0.88	1.10	80	-1.40	91	0.066	101	100	6.1	0.0	220	85	64	85	64	76	347	-0.040	10.05	0.040
205	27.931	28.585	0.14	0.14	1.49	80	-1.02	1.09	80	-1.60	91	0.066	100	100	6.0	-0.1	220	85	64	85	64	76	347	-0.040	10.06	0.030
206	28.068	28.724	0.14	0.14	1.50	80	-0.62	1.10	80	-1.60	91	0.065	101	101	6.0	0.0	220	85	64	85	64	75	347	-0.040	10.09	0.040
207	28.205	28.864	0.14	0.14	1.47	80	-0.90	1.09	80	-1.60	91	0.066	101	100	6.0	0.0	219	85	64	85	64	76	347	-0.040	10.12	0.040

Run:	6	Particulate Sampling Data													Fuel Weight (lb)		Temperature Data (°F)							Stack Gas Data		
Elapsed Time (min)	Gas Meter 1 (ft^3)	Gas Meter 2 (ft^3)	Sample Rate 1 (cfm)	Sample Rate 2 (cfm)	Orifice dH 1 ("H_2O)	Meter Temp 1 (°F)	Meter Vacuum 1 ("Hg)	Orifice dH 2 ("H_2O)	Meter Temp 2 (°F)	Meter Vacuum 2 ("Hg)	Dilution Tunnel (°F)	Tunnel Center dP	Pro. Rate 1	Pro. Rate 2	Scale Reading	Weight Change	Stack	Filter 1	Dryer 1	Filter 2	Dryer 2	Ambient	Avg. Surface	Draft ("H_2O)	CO_2 (%)	CO (%)
208	28.341	29.003	0.14	0.14	1.49	80	-0.98	1.10	80	-1.40	90	0.065	100	100	5.9	-0.1	219	85	64	85	64	76	346	-0.040	10.24	0.040
209	28.478	29.143	0.14	0.14	1.48	80	-1.09	1.10	80	-1.40	91	0.065	101	101	5.9	0.0	219	85	64	85	64	77	346	-0.040	10.33	0.040
210	28.614	29.283	0.14	0.14	1.49	80	-1.04	1.10	80	-1.40	91	0.066	100	100	5.9	0.0	218	85	64	85	64	76	346	-0.040	10.30	0.040
211	28.752	29.422	0.14	0.14	1.48	80	-0.99	1.09	80	-1.50	91	0.066	101	100	5.8	-0.1	219	85	64	85	64	76	347	-0.040	10.30	0.040
212	28.887	29.562	0.14	0.14	1.48	80	-0.84	1.09	80	-1.40	91	0.066	99	100	5.8	0.0	218	85	64	85	64	76	347	-0.040	10.26	0.040
213	29.024	29.702	0.14	0.14	1.50	80	-1.04	1.09	80	-1.60	91	0.065	101	101	5.8	0.0	217	85	64	85	64	75	347	-0.040	10.19	0.040
214	29.161	29.841	0.14	0.14	1.47	80	-0.88	1.10	80	-1.60	91	0.066	101	100	5.8	0.0	217	85	64	85	64	75	347	-0.040	10.08	0.040
215	29.297	29.980	0.14	0.14	1.49	80	-1.10	1.10	80	-1.60	91	0.065	101	101	5.7	-0.1	216	85	64	85	64	75	347	-0.040	10.00	0.040
216	29.434	30.120	0.14	0.14	1.49	80	-1.10	1.10	80	-1.60	91	0.066	101	100	5.7	0.0	216	85	64	85	64	75	346	-0.040	9.94	0.040
217	29.570	30.260	0.14	0.14	1.48	80	-0.97	1.09	80	-1.60	91	0.065	101	101	5.7	0.0	215	85	64	85	64	75	346	-0.040	9.86	0.040
218	29.707	30.399	0.14	0.14	1.50	80	-0.76	1.09	80	-1.50	91	0.066	101	100	5.6	-0.1	214	85	64	85	64	75	346	-0.040	9.80	0.040
219	29.844	30.539	0.14	0.14	1.47	80	-0.63	1.10	80	-1.60	91	0.065	101	101	5.6	0.0	213	85	64	85	64	75	346	-0.040	9.74	0.040
220	29.980	30.678	0.14	0.14	1.49	80	-1.09	1.10	80	-1.40	91	0.066	100	100	5.6	0.0	212	85	64	85	64	74	345	-0.040	9.77	0.040
221	30.117	30.818	0.14	0.14	1.48	80	-0.87	1.10	80	-1.40	91	0.066	101	100	5.5	-0.1	211	85	64	85	64	76	345	-0.040	9.72	0.040
222	30.253	30.957	0.14	0.14	1.49	80	-1.06	1.10	80	-1.60	91	0.066	100	100	5.5	0.0	210	85	64	86	64	75	345	-0.040	9.70	0.040
223	30.391	31.097	0.14	0.14	1.49	80	-1.06	1.09	80	-1.50	91	0.066	101	100	5.5	0.0	210	85	64	86	64	74	344	-0.040	9.37	0.040
224	30.526	31.237	0.14	0.14	1.48	80	-0.73	1.09	80	-1.40	90	0.066	99	100	5.5	0.0	209	85	64	85	64	75	344	-0.040	9.18	0.040
225	30.663	31.376	0.14	0.14	1.50	80	-0.66	1.10	80	-1.60	90	0.065	101	100	5.4	-0.1	208	85	64	86	64	75	343	-0.040	9.15	0.040
226	30.800	31.516	0.14	0.14	1.47	80	-0.66	1.10	80	-1.60	90	0.067	100	100	5.4	0.0	207	85	64	85	64	74	343	-0.040	9.08	0.040
227	30.937	31.656	0.14	0.14	1.49	80	-0.70	1.10	80	-1.60	90	0.065	101	101	5.4	0.0	206	85	64	85	64	74	343	-0.040	9.08	0.040
228	31.074	31.795	0.14	0.14	1.50	80	-0.69	1.10	80	-1.40	90	0.067	100	99	5.4	0.0	205	85	64	85	64	75	342	-0.040	9.08	0.040
229	31.210	31.935	0.14	0.14	1.49	79	-0.78	1.09	80	-1.40	90	0.067	99	100	5.4	0.0	205	85	64	85	64	74	341	-0.040	9.12	0.040
230	31.347	32.075	0.14	0.14	1.50	79	-0.96	1.09	80	-1.60	90	0.067	100	100	5.3	-0.1	204	85	64	85	64	74	341	-0.040	9.11	0.040
231	31.483	32.214	0.14	0.14	1.48	79	-1.10	1.10	80	-1.40	90	0.065	101	100	5.3	0.0	203	85	64	85	64	74	340	-0.040	9.12	0.040
232	31.620	32.354	0.14	0.14	1.49	79	-1.10	1.09	80	-1.40	90	0.066	101	100	5.3	0.0	202	84	64	85	64	74	340	-0.040	9.13	0.040
233	31.757	32.494	0.14	0.14	1.48	79	-0.77	1.10	80	-1.40	90	0.066	101	100	5.2	-0.1	202	84	64	85	64	74	339	-0.040	9.23	0.040
234	31.893	32.633	0.14	0.14	1.49	79	-0.92	1.10	80	-1.40	90	0.066	100	100	5.2	0.0	201	84	64	85	64	74	338	-0.040	9.25	0.040
235	32.031	32.773	0.14	0.14	1.47	80	-0.86	1.10	80	-1.60	90	0.067	100	100	5.2	0.0	200	84	64	85	64	74	338	-0.030	9.28	0.040
236	32.166	32.913	0.13	0.14	1.48	80	-1.09	1.09	80	-1.40	90	0.066	99	100	5.2	0.0	199	84	64	85	64	75	337	-0.030	9.30	0.040
237	32.303	33.052	0.14	0.14	1.50	80	-0.98	1.10	80	-1.40	90	0.066	100	100	5.1	-0.1	199	84	64	85	64	74	337	-0.030	9.32	0.040
238	32.440	33.192	0.14	0.14	1.48	80	-1.02	1.10	80	-1.60	89	0.066	100	100	5.1	0.0	199	84	64	85	64	74	336	-0.030	9.36	0.040
239	32.577	33.332	0.14	0.14	1.49	80	-1.09	1.10	80	-1.40	89	0.066	100	100	5.1	0.0	198	84	64	85	64	74	336	-0.030	9.40	0.040
240	32.714	33.471	0.14	0.14	1.49	79	-1.04	1.10	80	-1.60	89	0.065	101	100	5.1	0.0	197	84	64	85	64	74	335	-0.030	9.44	0.040
241	32.850	33.611	0.14	0.14	1.48	80	-0.89	1.10	80	-1.40	89	0.065	100	101	5.0	-0.1	197	84	64	85	64	74	335	-0.030	9.41	0.040
242	32.987	33.751	0.14	0.14	1.50	80	-0.74	1.09	80	-1.60	89	0.066	100	100	5.0	0.0	196	84	64	85	63	74	334	-0.030	9.46	0.040
243	33.123	33.890	0.14	0.14	1.47	80	-0.61	1.09	80	-1.40	89	0.066	100	100	5.0	0.0	196	84	64	85	64	74	334	-0.030	9.43	0.040
244	33.260	34.030	0.14	0.14	1.49	80	-0.91	1.10	80	-1.40	89	0.066	100	100	5.0	0.0	196	84	64	85	64	74	334	-0.030	9.46	0.040
245	33.397	34.170	0.14	0.14	1.49	79	-0.62	1.10	80	-1.60	89	0.067	100	100	5.0	0.0	196	84	64	85	63	75	334	-0.030	9.84	0.040
246	33.533	34.309	0.14	0.14	1.49	80	-0.87	1.10	80	-1.40	89	0.066	100	100	4.9	-0.1	196	84	64	85	63	75	334	-0.030	9.99	0.040
247	33.671	34.449	0.14	0.14	1.48	80	-0.95	1.10	80	-1.60	89	0.066	101	100	4.9	0.0	196	84	64	85	64	75	333	-0.030	10.07	0.040
248	33.807	34.589	0.14	0.14	1.48	80	-1.09	1.10	80	-1.30	89	0.066	100	100	4.9	0.0	196	84	64	85	64	74	333	-0.030	10.15	0.040
249	33.943	34.728	0.14	0.14	1.49	80	-0.89	1.09	80	-1.60	89	0.066	100	100	4.8	-0.1	196	84	64	85	63	74	333	-0.030	10.19	0.040
250	34.080	34.868	0.14	0.14	1.48	80	-0.61	1.10	80	-1.40	89	0.065	101	101	4.8	0.0	196	84	64	85	63	74	333	-0.030	10.18	0.040
251	34.216	35.008	0.14	0.14	1.50	80	-0.87	1.09	80	-1.60	89	0.066	100	100	4.8	0.0	196	84	64	85	63	74	333	-0.030	10.13	0.040
252	34.354	35.148	0.14	0.14	1.49	80	-0.65	1.10	80	-1.40	89	0.066	101	100	4.8	0.0	196	84	64	85	63	75	333	-0.030	10.09	0.040
253	34.490	35.287	0.14	0.14	1.48	80	-1.03	1.10	80	-1.60	89	0.066	100	100	4.8	0.0	196	84	64	85	63	74	333	-0.030	10.09	0.040
254	34.627	35.427	0.14	0.14	1.50	80	-0.83	1.10	80	-1.40	89	0.066	100	100	4.7	-0.1	196	84	64	85	63	74	332	-0.030	10.10	0.040
255	34.764	35.567	0.14	0.14	1.48	80	-0.82	1.09	80	-1.50	88	0.066	100	100	4.7	0.0	196	84	64	85	63	74	332	-0.030	10.07	0.040
256	34.900	35.706	0.14	0.14	1.50	80	-1.08	1.09	80	-1.40	88	0.066	100	99	4.7	0.0	195	84	64	85	63	74	332	-0.030	9.99	0.040
257	35.037	35.846	0.14	0.14	1.49	80	-1.09	1.10	80	-1.40	88	0.066	100	100	4.7	0.0	195	84	64	85	63	74	332	-0.030	10.01	0.040
258	35.174	35.986	0.14	0.14	1.49	80	-0.72	1.10	80	-1.60	88	0.065	101	101	4.6	-0.1	194	84	64	85	63	74	332	-0.030	9.90	0.040
259	35.311	36.125	0.14	0.14	1.50	80	-0.86	1.10	80	-1.60	88	0.067	99	99	4.6	0.0	194	84	64	85	63	74	332	-0.030	9.84	0.040
260	35.447	36.265	0.14	0.14	1.48	80	-1.09	1.10	80	-1.50	88	0.066	100	100	4.6	0.0	194	84	64	85	63	74	332	-0.030	9.83	0.040
261	35.584	36.405	0.14	0.14	1.50	80	-1.10	1.10	80	-1.50	88	0.066	100	100	4.6	0.0	193	84	64	85	63	74	332	-0.030	9.77	0.040
262	35.721	36.544	0.14	0.14	1.49	80	-0.89	1.09	80	-1.60	88	0.066	99	99	4.5	-0.1	193	84	64	85	63	74	331	-0.030	9.79	0.040

Run:	6	Particulate Sampling Data													Fuel Weight (lb)		Temperature Data (°F)							Stack Gas Data		
Elapsed Time (min)	Gas Meter 1 (ft^3)	Gas Meter 2 (ft^3)	Sample Rate 1 (cfm)	Sample Rate 2 (cfm)	Orifice dH 1 ("H_2O)	Meter Temp 1 (°F)	Meter Vacuum 1 ("Hg)	Orifice dH 2 ("H_2O)	Meter Temp 2 (°F)	Meter Vacuum 2 ("Hg)	Dilution Tunnel (°F)	Tunnel Center dP	Pro. Rate 1	Pro. Rate 2	Scale Reading	Weight Change	Stack	Filter 1	Dryer 1	Filter 2	Dryer 2	Ambient	Avg. Surface	Draft ("H_2O)	CO_2 (%)	CO (%)
263	35.857	36.684	0.14	0.14	1.49	80	-0.62	1.10	80	-1.60	88	0.066	100	100	4.5	0.0	193	84	64	85	63	74	331	-0.030	9.67	0.040
264	35.995	36.824	0.14	0.14	1.50	80	-0.98	1.09	80	-1.60	88	0.065	102	101	4.5	0.0	193	84	64	85	63	74	331	-0.030	9.64	0.040
265	36.131	36.964	0.14	0.14	1.49	80	-0.65	1.10	80	-1.60	88	0.066	100	100	4.5	0.0	193	83	64	85	63	74	331	-0.030	9.59	0.040
266	36.267	37.103	0.14	0.14	1.50	80	-0.62	1.10	80	-1.50	88	0.067	99	99	4.4	-0.1	193	83	64	85	63	74	331	-0.030	9.56	0.040
267	36.405	37.244	0.14	0.14	1.49	80	-0.70	1.10	80	-1.30	88	0.067	100	100	4.4	0.0	192	83	64	85	63	74	331	-0.030	9.48	0.040
268	36.541	37.383	0.14	0.14	1.50	79	-0.92	1.09	80	-1.30	88	0.065	100	100	4.4	0.0	192	83	64	85	63	74	331	-0.030	9.43	0.040
269	36.678	37.522	0.14	0.14	1.50	80	-0.78	1.10	80	-1.60	88	0.065	101	100	4.4	0.0	192	83	64	85	63	74	331	-0.030	9.42	0.040
270	36.814	37.662	0.14	0.14	1.49	79	-0.72	1.10	80	-1.40	88	0.066	100	100	4.3	-0.1	192	83	64	85	63	74	330	-0.030	9.44	0.040
271	36.951	37.802	0.14	0.14	1.50	80	-1.07	1.10	80	-1.40	88	0.067	99	99	4.3	0.0	191	83	64	84	63	74	330	-0.030	9.47	0.040
272	37.088	37.941	0.14	0.14	1.47	79	-0.70	1.10	80	-1.50	87	0.066	100	99	4.3	0.0	191	83	64	84	63	74	330	-0.030	9.43	0.040
273	37.225	38.081	0.14	0.14	1.50	80	-1.10	1.10	80	-1.50	88	0.066	100	100	4.3	0.0	191	83	64	84	63	75	330	-0.030	9.46	0.040
274	37.362	38.221	0.14	0.14	1.49	80	-0.67	1.10	80	-1.60	88	0.067	99	99	4.3	0.0	191	83	64	84	63	74	330	-0.030	9.45	0.040
275	37.498	38.360	0.14	0.14	1.49	80	-0.83	1.09	80	-1.40	88	0.066	100	99	4.2	-0.1	191	84	64	84	63	73	330	-0.030	9.43	0.040
276	37.635	38.500	0.14	0.14	1.50	80	-0.86	1.10	80	-1.40	88	0.065	101	101	4.2	0.0	191	84	64	84	63	73	330	-0.030	9.42	0.040
277	37.772	38.640	0.14	0.14	1.48	80	-0.69	1.10	80	-1.60	87	0.067	99	99	4.2	0.0	191	84	64	84	63	74	330	-0.030	9.53	0.040
278	37.909	38.779	0.14	0.14	1.49	80	-0.70	1.10	80	-1.50	88	0.066	100	99	4.2	0.0	191	84	64	84	63	73	330	-0.030	9.47	0.040
279	38.046	38.919	0.14	0.14	1.49	80	-1.10	1.10	80	-1.60	87	0.065	101	101	4.2	0.0	190	84	64	84	63	73	330	-0.030	9.48	0.040
280	38.182	39.059	0.14	0.14	1.49	80	-0.64	1.10	80	-1.50	87	0.066	99	100	4.1	-0.1	190	84	64	84	63	74	330	-0.030	9.45	0.040
281	38.320	39.198	0.14	0.14	1.50	80	-1.09	1.09	80	-1.30	87	0.067	100	99	4.1	0.0	190	84	64	84	63	73	330	-0.030	9.47	0.040
282	38.456	39.338	0.14	0.14	1.49	80	-0.93	1.10	80	-1.50	87	0.067	99	99	4.1	0.0	190	84	64	84	63	74	330	-0.030	9.41	0.040
283	38.592	39.478	0.14	0.14	1.50	80	-1.07	1.09	80	-1.40	87	0.067	99	99	4.1	0.0	190	84	64	84	63	74	330	-0.030	9.46	0.040
284	38.729	39.617	0.14	0.14	1.49	80	-0.67	1.10	80	-1.50	87	0.066	100	99	4.1	0.0	190	84	64	84	63	74	330	-0.030	9.47	0.040
285	38.866	39.757	0.14	0.14	1.50	80	-0.97	1.10	80	-1.50	87	0.065	101	101	4.0	-0.1	191	84	64	84	63	74	330	-0.030	9.43	0.040
286	39.003	39.897	0.14	0.14	1.49	80	-0.62	1.10	80	-1.50	87	0.067	99	99	4.0	0.0	191	84	64	84	63	74	330	-0.030	9.44	0.040
287	39.139	40.036	0.14	0.14	1.48	80	-1.08	1.09	80	-1.60	87	0.066	99	99	4.0	0.0	190	84	64	84	63	74	330	-0.030	9.44	0.040
288	39.276	40.176	0.14	0.14	1.50	80	-0.68	1.10	80	-1.60	87	0.065	101	101	3.9	-0.1	190	85	64	84	63	74	330	-0.030	9.45	0.040
289	39.413	40.316	0.14	0.14	1.48	80	-1.09	1.10	80	-1.40	87	0.066	100	100	3.9	0.0	190	85	64	84	63	73	330	-0.030	9.46	0.040
290	39.550	40.456	0.14	0.14	1.50	80	-1.08	1.10	80	-1.40	87	0.066	100	100	3.9	0.0	190	85	64	84	63	74	330	-0.030	9.46	0.040
291	39.687	40.595	0.14	0.14	1.50	80	-0.87	1.10	80	-1.50	87	0.066	100	99	3.9	0.0	190	85	64	84	63	74	330	-0.030	9.43	0.040
292	39.823	40.735	0.14	0.14	1.49	80	-0.63	1.10	80	-1.60	87	0.067	99	99	3.9	0.0	190	85	64	84	63	74	330	-0.030	9.47	0.040
293	39.960	40.874	0.14	0.14	1.50	80	-1.09	1.10	80	-1.60	87	0.067	99	99	3.8	-0.1	190	85	64	84	63	74	330	-0.030	9.43	0.040
294	40.097	41.014	0.14	0.14	1.48	80	-0.95	1.09	80	-1.40	87	0.067	99	99	3.8	0.0	190	85	64	84	63	74	330	-0.030	9.45	0.040
295	40.233	41.154	0.14	0.14	1.50	80	-0.85	1.10	80	-1.50	87	0.067	99	99	3.8	0.0	191	85	64	84	63	74	330	-0.030	9.43	0.040
296	40.371	41.294	0.14	0.14	1.49	80	-0.86	1.10	80	-1.60	87	0.066	101	100	3.7	-0.1	190	85	64	84	63	74	330	-0.030	9.49	0.050
297	40.507	41.433	0.14	0.14	1.49	80	-1.10	1.10	80	-1.30	86	0.066	99	99	3.8	0.1	191	85	64	84	63	74	330	-0.030	9.48	0.040
298	40.644	41.573	0.14	0.14	1.50	80	-0.64	1.10	80	-1.60	87	0.066	100	100	3.7	-0.1	190	85	64	84	63	74	330	-0.030	9.47	0.050
299	40.780	41.713	0.14	0.14	1.49	79	-1.08	1.10	80	-1.40	86	0.065	100	101	3.7	0.0	190	85	64	84	63	74	330	-0.030	9.52	0.050
300	40.917	41.853	0.14	0.14	1.50	80	-0.72	1.09	80	-1.40	86	0.065	101	101	3.7	0.0	191	85	64	84	63	74	330	-0.030	9.53	0.050
301	41.054	41.992	0.14	0.14	1.49	80	-1.10	1.10	80	-1.60	86	0.066	100	99	3.7	0.0	191	85	64	84	63	74	331	-0.030	9.54	0.050
302	41.191	42.132	0.14	0.14	1.49	80	-0.66	1.10	80	-1.40	86	0.066	100	100	3.6	-0.1	190	85	64	83	63	74	331	-0.030	9.53	0.050
303	41.328	42.272	0.14	0.14	1.50	80	-0.67	1.10	80	-1.60	86	0.065	101	101	3.6	0.0	191	85	64	83	63	74	331	-0.030	9.55	0.050
304	41.464	42.411	0.14	0.14	1.49	80	-1.08	1.10	80	-1.40	86	0.066	99	99	3.6	0.0	191	85	64	83	63	73	331	-0.030	9.58	0.050
305	41.601	42.551	0.14	0.14	1.50	80	-1.09	1.09	80	-1.50	86	0.066	100	100	3.6	0.0	191	85	64	83	63	73	331	-0.030	9.57	0.050
306	41.738	42.691	0.14	0.14	1.48	80	-0.99	1.10	80	-1.60	86	0.066	100	100	3.5	-0.1	192	85	64	83	63	74	331	-0.030	9.57	0.050
307	41.875	42.830	0.14	0.14	1.50	80	-0.61	1.09	80	-1.60	86	0.065	101	100	3.5	0.0	191	85	64	83	63	73	331	-0.030	9.55	0.050
308	42.012	42.971	0.14	0.14	1.49	79	-1.02	1.10	79	-1.40	86	0.066	100	101	3.5	0.0	191	85	64	83	63	73	331	-0.030	9.60	0.050
309	42.148	43.110	0.14	0.14	1.49	79	-1.06	1.10	79	-1.30	86	0.067	99	99	3.5	0.0	191	85	64	83	63	73	332	-0.030	9.59	0.050
310	42.285	43.250	0.14	0.14	1.50	79	-1.08	1.10	79	-1.50	86	0.066	100	100	3.4	-0.1	191	85	64	83	63	73	332	-0.030	9.63	0.050
311	42.422	43.390	0.14	0.14	1.48	79	-0.61	1.10	79	-1.60	86	0.066	100	100	3.4	0.0	192	85	64	83	63	73	332	-0.030	9.68	0.050
312	42.559	43.530	0.14	0.14	1.50	79	-0.67	1.10	79	-1.50	86	0.067	99	99	3.4	0.0	192	85	64	83	63	73	332	-0.030	9.76	0.050
313	42.696	43.669	0.14	0.14	1.49	79	-0.93	1.10	80	-1.60	86	0.067	99	99	3.4	0.0	191	85	64	83	63	73	332	-0.030	9.74	0.050
314	42.832	43.809	0.14	0.14	1.49	79	-0.63	1.10	79	-1.30	86	0.066	100	100	3.4	0.0	192	85	64	83	63	73	332	-0.030	9.69	0.050
315	42.970	43.949	0.14	0.14	1.50	80	-0.62	1.10	79	-1.50	86	0.067	100	99	3.3	-0.1	192	85	64	83	63	73	333	-0.030	9.61	0.050
316	43.106	44.089	0.14	0.14	1.48	79	-0.87	1.10	79	-1.60	86	0.066	100	100	3.3	0.0	192	85	64	83	63	74	333	-0.030	9.62	0.050
317	43.243	44.228	0.14	0.14	1.49	79	-0.79	1.10	79	-1.30	86	0.066	100	99	3.3	0.0	193	85	64	83	63	73	333	-0.030	9.64	0.050

Run:	6	Particulate Sampling Data													Fuel Weight (lb)		Temperature Data (°F)							Stack Gas Data		
Elapsed Time (min)	Gas Meter 1 (ft^3)	Gas Meter 2 (ft^3)	Sample Rate 1 (cfm)	Sample Rate 2 (cfm)	Orifice dH 1 ("H_2O)	Meter Temp 1 (°F)	Meter Vacuum 1 ("Hg)	Orifice dH 2 ("H_2O)	Meter Temp 2 (°F)	Meter Vacuum 2 ("Hg)	Dilution Tunnel (°F)	Tunnel Center dP	Pro. Rate 1	Pro. Rate 2	Scale Reading	Weight Change	Stack	Filter 1	Dryer 1	Filter 2	Dryer 2	Ambient	Avg. Surface	Draft ("H_2O)	CO_2 (%)	CO (%)
318	43.380	44.368	0.14	0.14	1.49	79	-0.83	1.09	79	-1.50	86	0.066	100	100	3.3	0.0	193	85	64	83	63	73	333	-0.030	9.69	0.050
319	43.516	44.508	0.14	0.14	1.49	79	-0.78	1.10	79	-1.40	86	0.066	100	100	3.2	-0.1	193	85	64	83	63	73	333	-0.030	9.67	0.050
320	43.654	44.647	0.14	0.14	1.49	79	-0.94	1.09	79	-1.40	86	0.066	101	99	3.2	0.0	193	84	64	83	63	73	333	-0.030	9.65	0.050
321	43.790	44.787	0.14	0.14	1.49	79	-0.95	1.10	79	-1.50	86	0.066	100	100	3.2	0.0	192	84	64	83	63	73	333	-0.030	9.67	0.050
322	43.926	44.927	0.14	0.14	1.50	79	-0.85	1.10	79	-1.60	86	0.066	100	100	3.2	0.0	192	84	64	83	63	73	334	-0.030	9.63	0.050
323	44.064	45.066	0.14	0.14	1.49	79	-0.75	1.10	79	-1.50	86	0.066	101	99	3.1	-0.1	192	84	64	83	63	73	334	-0.030	9.63	0.050
324	44.200	45.206	0.14	0.14	1.50	79	-0.71	1.10	79	-1.40	86	0.066	100	100	3.1	0.0	192	84	64	83	63	73	334	-0.030	9.57	0.050
325	44.338	45.346	0.14	0.14	1.49	79	-1.09	1.10	79	-1.50	86	0.067	100	99	3.1	0.0	192	84	64	83	63	73	334	-0.030	9.60	0.050
326	44.474	45.485	0.14	0.14	1.49	79	-0.95	1.09	79	-1.30	85	0.066	99	99	3.1	0.0	192	84	64	83	63	73	334	-0.030	9.56	0.050
327	44.610	45.625	0.14	0.14	1.50	79	-1.08	1.10	79	-1.40	85	0.067	99	99	3.1	0.0	192	84	64	83	63	73	334	-0.030	9.53	0.050
328	44.747	45.765	0.14	0.14	1.48	79	-0.92	1.09	79	-1.50	85	0.068	99	99	3.0	-0.1	192	84	64	83	63	73	334	-0.030	9.47	0.050
329	44.884	45.905	0.14	0.14	1.50	79	-1.08	1.10	79	-1.60	85	0.068	99	99	3.0	0.0	192	84	64	83	63	73	334	-0.030	9.43	0.050
330	45.021	46.044	0.14	0.14	1.49	79	-0.78	1.11	79	-1.40	85	0.068	99	98	3.0	0.0	191	84	64	83	63	73	334	-0.030	9.40	0.050
331	45.157	46.184	0.14	0.14	1.49	79	-0.90	1.10	79	-1.50	85	0.067	99	99	3.0	0.0	191	84	64	82	63	73	334	-0.030	9.39	0.050
332	45.295	46.324	0.14	0.14	1.50	79	-1.08	1.09	79	-1.30	85	0.067	100	99	2.9	-0.1	191	84	64	82	63	73	334	-0.030	9.39	0.050
333	45.432	46.463	0.14	0.14	1.48	79	-1.07	1.10	79	-1.50	85	0.067	99	99	2.9	0.0	191	84	64	82	63	73	334	-0.030	9.32	0.050
334	45.568	46.604	0.14	0.14	1.50	79	-1.05	1.10	79	-1.60	85	0.068	98	99	2.9	0.0	191	84	64	82	63	73	334	-0.030	9.27	0.050
335	45.705	46.743	0.14	0.14	1.50	79	-0.85	1.10	79	-1.60	85	0.068	99	98	2.9	0.0	190	84	64	82	63	73	334	-0.030	9.27	0.050
336	45.842	46.882	0.14	0.14	1.49	79	-0.61	1.10	79	-1.40	85	0.067	99	99	2.9	0.0	190	84	64	82	63	73	334	-0.030	9.25	0.050
337	45.979	47.023	0.14	0.14	1.48	79	-0.61	1.10	79	-1.30	85	0.067	99	100	2.8	-0.1	189	84	64	82	63	73	334	-0.030	9.17	0.050
338	46.115	47.162	0.14	0.14	1.49	79	-1.08	1.10	79	-1.40	85	0.067	99	99	2.8	0.0	189	84	64	82	63	73	334	-0.030	9.15	0.040
339	46.251	47.302	0.14	0.14	1.50	79	-0.90	1.09	79	-1.60	85	0.067	99	99	2.8	0.0	188	84	64	82	63	73	333	-0.030	9.13	0.050
340	46.389	47.442	0.14	0.14	1.50	79	-0.91	1.10	79	-1.50	85	0.068	99	99	2.8	0.0	188	84	64	82	63	73	333	-0.030	9.09	0.040
341	46.525	47.582	0.14	0.14	1.50	79	-0.76	1.10	79	-1.60	85	0.066	99	100	2.8	0.0	188	84	64	82	63	73	333	-0.030	9.01	0.040
342	46.663	47.721	0.14	0.14	1.48	79	-0.82	1.10	79	-1.40	85	0.068	99	98	2.8	0.0	187	84	64	82	63	73	333	-0.030	9.01	0.040
343	46.799	47.861	0.14	0.14	1.48	79	-1.00	1.11	79	-1.40	85	0.066	99	100	2.8	0.0	187	84	63	82	63	73	333	-0.030	8.93	0.040
344	46.935	48.001	0.14	0.14	1.50	79	-1.03	1.10	79	-1.50	85	0.067	99	99	2.7	-0.1	186	84	63	82	63	73	333	-0.030	8.92	0.040
345	47.072	48.140	0.14	0.14	1.48	79	-1.05	1.10	79	-1.60	85	0.067	99	99	2.7	0.0	186	84	63	82	63	73	333	-0.030	8.90	0.040
346	47.209	48.280	0.14	0.14	1.50	79	-0.61	1.10	79	-1.50	85	0.067	99	99	2.7	0.0	185	84	63	82	63	73	332	-0.030	8.70	0.050
347	47.346	48.420	0.14	0.14	1.49	79	-0.65	1.10	79	-1.60	85	0.067	99	99	2.7	0.0	185	84	63	82	63	73	332	-0.030	8.53	0.040
348	47.482	48.559	0.14	0.14	1.49	79	-1.08	1.10	79	-1.50	85	0.068	98	98	2.6	-0.1	185	84	63	82	63	73	332	-0.030	8.48	0.040
349	47.619	48.698	0.14	0.14	1.50	79	-0.72	1.10	79	-1.40	85	0.067	99	99	2.6	0.0	184	84	63	82	63	73	332	-0.030	8.36	0.040
350	47.756	48.839	0.14	0.14	1.48	79	-0.68	1.09	79	-1.60	85	0.068	99	99	2.6	0.0	183	84	63	82	63	73	332	-0.030	8.29	0.040
351	47.893	48.978	0.14	0.14	1.50	79	-0.67	1.10	79	-1.50	85	0.067	99	99	2.6	0.0	183	84	63	82	63	73	331	-0.030	8.28	0.040
352	48.030	49.118	0.14	0.14	1.49	79	-0.99	1.09	79	-1.60	85	0.067	99	99	2.6	0.0	182	84	63	82	63	73	331	-0.030	8.28	0.040
353	48.166	49.258	0.14	0.14	1.49	79	-1.06	1.10	79	-1.50	85	0.067	99	99	2.6	0.0	181	84	63	82	63	73	331	-0.030	8.25	0.040
354	48.303	49.398	0.14	0.14	1.51	79	-1.05	1.10	79	-1.40	85	0.067	99	99	2.6	0.0	181	84	63	82	63	73	330	-0.030	8.29	0.040
355	48.439	49.537	0.14	0.14	1.49	79	-0.96	1.10	79	-1.40	85	0.067	99	99	2.5	-0.1	180	84	63	82	63	74	330	-0.030	8.30	0.040
356	48.576	49.677	0.14	0.14	1.50	79	-0.87	1.10	79	-1.40	84	0.067	99	99	2.5	0.0	180	84	63	82	63	73	330	-0.030	8.31	0.040
357	48.713	49.817	0.14	0.14	1.49	79	-0.93	1.10	79	-1.60	85	0.068	99	99	2.5	0.0	179	84	63	82	63	73	330	-0.030	8.40	0.040
358	48.849	49.956	0.14	0.14	1.50	79	-1.10	1.09	79	-1.60	85	0.067	99	99	2.5	0.0	178	84	63	82	63	73	329	-0.030	8.66	0.050
359	48.987	50.096	0.14	0.14	1.49	79	-0.89	1.10	79	-1.60	85	0.068	99	99	2.5	0.0	178	84	63	82	63	73	329	-0.030	8.85	0.050
360	49.123	50.236	0.14	0.14	1.49	79	-0.62	1.10	79	-1.40	85	0.068	98	99	2.5	0.0	178	84	63	82	63	73	329	-0.030	8.94	0.050
361	49.259	50.375	0.14	0.14	1.50	79	-0.68	1.10	79	-1.60	85	0.067	99	99	2.4	-0.1	178	84	63	82	63	73	329	-0.030	8.90	0.050
362	49.396	50.515	0.14	0.14	1.48	79	-0.71	1.10	79	-1.30	85	0.068	99	99	2.4	0.0	179	84	63	82	63	73	329	-0.030	8.92	0.050
363	49.533	50.655	0.14	0.14	1.50	79	-1.06	1.09	79	-1.60	85	0.067	99	99	2.4	0.0	178	84	63	82	63	73	329	-0.030	8.97	0.050
364	49.670	50.794	0.14	0.14	1.50	79	-1.00	1.10	79	-1.40	85	0.068	99	98	2.4	0.0	179	84	63	82	63	74	329	-0.030	8.93	0.050
365	49.806	50.934	0.14	0.14	1.49	79	-1.01	1.09	79	-1.30	85	0.067	99	99	2.4	0.0	178	84	63	82	63	73	329	-0.030	8.91	0.050
366	49.943	51.074	0.14	0.14	1.50	79	-0.87	1.10	79	-1.40	85	0.068	99	99	2.3	-0.1	178	84	63	82	63	74	329	-0.030	8.89	0.050
367	50.079	51.213	0.14	0.14	1.48	79	-0.83	1.10	79	-1.60	85	0.068	98	98	2.3	0.0	177	84	63	82	63	73	329	-0.030	8.88	0.050
368	50.216	51.352	0.14	0.14	1.50	79	-1.04	1.10	79	-1.60	85	0.067	99	99	2.3	0.0	177	84	63	82	63	73	328	-0.030	8.80	0.050
369	50.353	51.493	0.14	0.14	1.49	79	-1.01	1.10	79	-1.60	85	0.068	99	99	2.3	0.0	177	84	63	82	63	73	328	-0.030	8.82	0.050
370	50.489	51.632	0.14	0.14	1.49	79	-1.03	1.10	79	-1.50	84	0.068	98	98	2.3	0.0	176	84	63	82	63	73	328	-0.030	8.73	0.040
371	50.627	51.772	0.14	0.14	1.50	79	-0.89	1.09	79	-1.60	85	0.067	100	99	2.3	0.0	176	84	63	82	63	73	328	-0.030	8.79	0.040
372	50.763	51.912	0.14	0.14	1.49	79	-1.01	1.10	79	-1.60	85	0.068	99	99	2.3	0.0	176	84	63	82	63	73	328	-0.030	8.77	0.040

Run:	6	Particulate Sampling Data													Fuel Weight (lb)		Temperature Data (°F)							Stack Gas Data		
Elapsed Time (min)	Gas Meter 1 (ft^3)	Gas Meter 2 (ft^3)	Sample Rate 1 (cfm)	Sample Rate 2 (cfm)	Orifice dH 1 ("H_2O)	Meter Temp 1 (°F)	Meter Vacuum 1 ("Hg)	Orifice dH 2 ("H_2O)	Meter Temp 2 (°F)	Meter Vacuum 2 ("Hg)	Dilution Tunnel (°F)	Tunnel Center dP	Pro. Rate 1	Pro. Rate 2	Scale Reading	Weight Change	Stack	Filter 1	Dryer 1	Filter 2	Dryer 2	Ambient	Avg. Surface	Draft ("H_2O)	CO_2 (%)	CO (%)
373	50.899	52.051	0.14	0.14	1.50	79	-0.89	1.10	79	-1.60	84	0.066	99	99	2.3	0.0	175	84	63	82	63	74	328	-0.030	8.77	0.040
374	51.036	52.190	0.14	0.14	1.48	79	-0.66	1.10	79	-1.50	84	0.067	99	99	2.2	-0.1	175	84	63	82	63	74	328	-0.030	8.81	0.040
375	51.173	52.330	0.14	0.14	1.50	79	-0.95	1.10	79	-1.30	84	0.067	99	99	2.2	0.0	175	84	63	82	63	73	328	-0.030	8.92	0.050
376	51.310	52.470	0.14	0.14	1.50	79	-0.99	1.10	79	-1.50	85	0.067	99	99	2.2	0.0	175	84	63	82	63	74	328	-0.030	8.94	0.050
377	51.446	52.609	0.14	0.14	1.49	79	-0.79	1.09	79	-1.30	84	0.068	98	98	2.2	0.0	174	84	63	83	63	74	327	-0.030	8.98	0.050
378	51.583	52.749	0.14	0.14	1.50	79	-0.67	1.09	79	-1.40	84	0.068	99	99	2.2	0.0	174	84	63	83	63	74	327	-0.030	9.01	0.050
379	51.719	52.889	0.14	0.14	1.48	79	-1.08	1.09	79	-1.60	85	0.068	98	99	2.2	0.0	174	84	63	83	63	74	327	-0.030	8.98	0.050
380	51.856	53.028	0.14	0.14	1.50	79	-0.84	1.10	79	-1.50	85	0.066	100	99	2.1	-0.1	173	84	63	83	63	73	328	-0.030	8.99	0.050
381	51.993	53.167	0.14	0.14	1.49	79	-0.91	1.10	79	-1.30	84	0.067	99	99	2.1	0.0	173	84	63	83	63	73	327	-0.030	8.83	0.040
382	52.128	53.307	0.13	0.14	1.49	79	-1.06	1.09	79	-1.50	85	0.067	98	99	2.1	0.0	173	84	63	83	63	74	327	-0.030	8.80	0.040
383	52.266	53.446	0.14	0.14	1.49	79	-0.94	1.09	79	-1.40	84	0.068	99	98	2.1	0.0	172	84	63	83	63	74	327	-0.030	8.76	0.040
384	52.401	53.586	0.14	0.14	1.48	79	-0.62	1.09	79	-1.60	84	0.067	98	99	2.0	-0.1	172	84	63	83	63	74	327	-0.030	8.78	0.040
385	52.538	53.726	0.14	0.14	1.50	79	-1.03	1.09	79	-1.40	85	0.067	99	99	2.0	0.0	173	84	63	83	63	74	327	-0.030	8.81	0.040
386	52.675	53.864	0.14	0.14	1.48	79	-1.04	1.10	79	-1.60	84	0.067	99	98	2.0	0.0	172	84	63	83	63	74	327	-0.030	8.75	0.040
387	52.811	54.004	0.14	0.14	1.49	79	-1.05	1.10	79	-1.60	85	0.067	99	99	2.0	0.0	171	84	63	83	63	74	327	-0.030	8.77	0.040
388	52.948	54.144	0.14	0.14	1.50	79	-0.89	1.09	79	-1.40	85	0.067	99	99	2.0	0.0	171	84	63	83	63	74	327	-0.030	8.84	0.040
389	53.084	54.283	0.14	0.14	1.49	79	-0.83	1.09	79	-1.30	84	0.067	99	99	2.0	0.0	171	84	63	83	63	74	327	-0.030	8.83	0.040
390	53.221	54.422	0.14	0.14	1.47	79	-0.83	1.09	79	-1.30	85	0.066	100	99	2.0	0.0	170	84	63	84	63	74	327	-0.030	8.87	0.040
391	53.357	54.562	0.14	0.14	1.48	79	-1.07	1.09	79	-1.50	84	0.067	99	99	2.0	0.0	170	84	63	84	63	74	327	-0.030	8.97	0.040
392	53.493	54.701	0.14	0.14	1.49	79	-0.67	1.10	79	-1.60	84	0.069	97	97	1.9	-0.1	170	84	63	84	63	74	327	-0.030	9.11	0.040
393	53.630	54.840	0.14	0.14	1.47	79	-0.87	1.10	79	-1.30	85	0.067	99	99	1.9	0.0	170	84	63	84	63	74	327	-0.030	9.08	0.040
394	53.766	54.980	0.14	0.14	1.50	79	-0.98	1.09	79	-1.40	85	0.066	99	100	1.9	0.0	169	84	63	84	63	74	327	-0.030	9.08	0.040
395	53.903	55.119	0.14	0.14	1.49	79	-1.07	1.09	79	-1.50	85	0.067	99	99	1.9	0.0	169	84	63	84	63	74	327	-0.030	9.05	0.040
396	54.039	55.259	0.14	0.14	1.49	79	-0.93	1.10	79	-1.50	85	0.067	99	99	1.9	0.0	169	84	63	84	63	74	327	-0.030	9.11	0.040
397	54.176	55.399	0.14	0.14	1.50	79	-0.77	1.09	79	-1.50	85	0.067	99	99	1.9	0.0	169	84	63	84	63	74	327	-0.030	9.17	0.040
398	54.312	55.538	0.14	0.14	1.48	79	-1.10	1.10	79	-1.30	85	0.067	99	99	1.9	0.0	168	84	63	84	63	74	327	-0.030	9.15	0.040
399	54.448	55.677	0.14	0.14	1.49	79	-0.65	1.10	79	-1.50	85	0.067	99	99	1.9	0.0	168	84	63	84	63	74	327	-0.030	9.22	0.040
400	54.585	55.817	0.14	0.14	1.47	79	-0.77	1.10	79	-1.50	85	0.066	100	100	1.8	-0.1	167	84	63	84	63	74	328	-0.030	9.17	0.040
401	54.721	55.956	0.14	0.14	1.49	79	-0.72	1.09	79	-1.50	84	0.067	99	99	1.8	0.0	168	84	63	84	63	74	328	-0.030	9.16	0.040
402	54.858	56.095	0.14	0.14	1.49	79	-1.02	1.10	79	-1.60	85	0.067	99	99	1.8	0.0	168	85	63	84	63	74	328	-0.030	9.19	0.040
403	54.994	56.235	0.14	0.14	1.49	79	-0.61	1.09	79	-1.50	85	0.067	99	99	1.8	0.0	167	85	63	84	63	74	328	-0.030	9.20	0.040
404	55.131	56.374	0.14	0.14	1.50	79	-0.67	1.10	79	-1.50	85	0.067	99	99	1.8	0.0	167	85	63	84	63	74	328	-0.030	9.20	0.040
405	55.268	56.514	0.14	0.14	1.48	79	-1.01	1.10	79	-1.60	85	0.067	99	99	1.7	-0.1	167	85	63	84	63	74	328	-0.030	9.22	0.040
406	55.404	56.654	0.14	0.14	1.50	79	-1.02	1.10	79	-1.40	85	0.066	99	100	1.7	0.0	167	85	63	84	63	74	329	-0.030	9.21	0.040
407	55.541	56.793	0.14	0.14	1.48	79	-1.05	1.09	79	-1.50	85	0.067	99	99	1.7	0.0	167	85	63	84	63	74	329	-0.030	9.25	0.040
408	55.677	56.933	0.14	0.14	1.49	79	-0.72	1.10	79	-1.40	85	0.068	98	99	1.7	0.0	167	85	63	84	63	74	329	-0.030	9.21	0.040
409	55.814	57.073	0.14	0.14	1.49	79	-1.00	1.09	79	-1.60	85	0.067	99	99	1.7	0.0	167	85	63	84	63	74	329	-0.030	9.25	0.040
410	55.950	57.212	0.14	0.14	1.49	79	-0.98	1.10	79	-1.40	85	0.068	98	98	1.7	0.0	166	85	63	84	63	74	329	-0.030	9.17	0.040
411	56.086	57.351	0.14	0.14	1.50	79	-1.05	1.10	79	-1.50	85	0.067	99	99	1.7	0.0	166	85	63	84	63	74	329	-0.030	9.20	0.040
412	56.224	57.491	0.14	0.14	1.48	79	-0.76	1.10	79	-1.60	85	0.067	100	99	1.7	0.0	166	85	63	84	63	74	330	-0.030	9.17	0.040
413	56.360	57.630	0.14	0.14	1.50	79	-0.63	1.09	79	-1.40	85	0.067	99	99	1.7	0.0	166	85	63	84	63	74	330	-0.030	9.15	0.040
414	56.497	57.770	0.14	0.14	1.50	79	-0.96	1.10	79	-1.50	85	0.068	99	99	1.7	0.0	166	85	63	85	63	75	330	-0.030	9.16	0.040
415	56.633	57.910	0.14	0.14	1.48	79	-0.61	1.09	79	-1.50	85	0.068	98	99	1.6	-0.1	165	85	63	85	63	74	330	-0.030	9.13	0.040
416	56.770	58.049	0.14	0.14	1.50	79	-0.63	1.10	79	-1.60	85	0.069	98	97	1.6	0.0	165	85	63	85	63	74	330	-0.030	9.18	0.050
417	56.906	58.188	0.14	0.14	1.48	79	-1.04	1.10	79	-1.40	85	0.068	98	98	1.6	0.0	165	85	63	85	63	74	331	-0.030	9.26	0.050
418	57.043	58.329	0.14	0.14	1.50	79	-1.05	1.09	79	-1.60	85	0.067	99	100	1.6	0.0	165	85	63	85	63	75	331	-0.030	9.29	0.050
419	57.180	58.468	0.14	0.14	1.49	79	-0.72	1.09	79	-1.40	85	0.068	99	98	1.6	0.0	166	85	63	85	63	74	331	-0.030	9.35	0.050
420	57.316	58.607	0.14	0.14	1.49	79	-1.01	1.10	79	-1.40	85	0.066	99	99	1.6	0.0	166	85	63	85	63	74	331	-0.030	9.35	0.050
421	57.453	58.747	0.14	0.14	1.49	79	-0.79	1.09	79	-1.50	85	0.067	99	99	1.6	0.0	166	85	63	85	63	75	332	-0.030	9.33	0.050
422	57.589	58.887	0.14	0.14	1.49	79	-1.00	1.10	79	-1.50	85	0.067	99	99	1.5	-0.1	166	85	63	85	63	75	332	-0.030	9.39	0.050
423	57.726	59.026	0.14	0.14	1.50	79	-0.71	1.10	79	-1.40	85	0.067	99	99	1.5	0.0	166	85	63	85	63	75	332	-0.030	9.46	0.050
424	57.863	59.166	0.14	0.14	1.48	79	-0.84	1.10	79	-1.60	85	0.067	99	99	1.5	0.0	166	85	63	85	63	74	332	-0.030	9.43	0.050
425	57.999	59.305	0.14	0.14	1.49	79	-0.83	1.09	79	-1.60	85	0.067	99	99	1.5	0.0	166	85	63	85	63	74	333	-0.030	9.53	0.050
426	58.136	59.445	0.14	0.14	1.50	79	-1.04	1.09	79	-1.30	85	0.067	99	99	1.5	0.0	166	85	63	85	63	75	333	-0.030	9.59	0.050
427	58.272	59.585	0.14	0.14	1.49	79	-0.87	1.10	79	-1.50	85	0.068	98	98	1.5	0.0	166	85	63	85	63	74	333	-0.030	9.68	0.050

Run:	6	Particulate Sampling Data													Fuel Weight (lb)		Temperature Data (°F)							Stack Gas Data		
Elapsed Time (min)	Gas Meter 1 (ft^3)	Gas Meter 2 (ft^3)	Sample Rate 1 (cfm)	Sample Rate 2 (cfm)	Orifice dH 1 ("H_2O)	Meter Temp 1 (°F)	Meter Vacuum 1 ("Hg)	Orifice dH 2 ("H_2O)	Meter Temp 2 (°F)	Meter Vacuum 2 ("Hg)	Dilution Tunnel (°F)	Tunnel Center dP	Pro. Rate 1	Pro. Rate 2	Scale Reading	Weight Change	Stack	Filter 1	Dryer 1	Filter 2	Dryer 2	Ambient	Avg. Surface	Draft ("H_2O)	CO_2 (%)	CO (%)
428	58.409	59.724	0.14	0.14	1.48	79	-0.62	1.10	79	-1.60	85	0.067	99	99	1.5	0.0	166	85	63	85	63	74	333	-0.030	9.72	0.050
429	58.545	59.863	0.14	0.14	1.48	79	-0.62	1.10	79	-1.40	85	0.067	99	99	1.4	-0.1	166	85	63	85	63	75	333	-0.030	9.75	0.050
430	58.682	60.003	0.14	0.14	1.49	79	-0.62	1.10	79	-1.30	85	0.068	99	99	1.4	0.0	167	85	63	85	63	74	334	-0.030	9.70	0.050
431	58.819	60.143	0.14	0.14	1.48	79	-0.63	1.09	79	-1.40	85	0.067	99	99	1.4	0.0	167	85	63	85	63	74	334	-0.030	9.57	0.050
432	58.955	60.282	0.14	0.14	1.49	79	-1.10	1.09	79	-1.40	85	0.068	98	98	1.4	0.0	167	85	63	85	63	75	334	-0.030	9.17	0.050
433	59.092	60.422	0.14	0.14	1.48	79	-0.94	1.10	79	-1.60	85	0.067	99	99	1.4	0.0	168	85	63	85	63	74	334	-0.030	9.08	0.050
434	59.228	60.561	0.14	0.14	1.48	79	-0.86	1.10	79	-1.40	85	0.067	99	99	1.4	0.0	168	85	63	85	63	74	334	-0.030	9.19	0.050
435	59.365	60.700	0.14	0.14	1.50	79	-1.10	1.10	79	-1.40	85	0.068	99	98	1.4	0.0	168	85	63	85	63	75	334	-0.030	9.38	0.050
436	59.501	60.840	0.14	0.14	1.48	79	-0.61	1.10	79	-1.40	85	0.067	99	99	1.3	-0.1	168	85	63	85	63	75	334	-0.030	9.41	0.040
437	59.638	60.980	0.14	0.14	1.50	79	-1.05	1.09	79	-1.40	85	0.065	101	101	1.3	0.0	169	85	63	85	63	74	334	-0.030	9.41	0.040
438	59.774	61.119	0.14	0.14	1.49	79	-0.86	1.09	79	-1.60	85	0.067	99	99	1.3	0.0	169	85	63	85	63	74	334	-0.030	9.45	0.040
439	59.910	61.259	0.14	0.14	1.49	79	-0.98	1.10	79	-1.40	85	0.067	99	99	1.3	0.0	168	85	63	85	63	74	334	-0.030	9.48	0.040
440	60.048	61.399	0.14	0.14	1.50	79	-1.05	1.10	79	-1.50	85	0.067	100	99	1.3	0.0	168	85	63	85	63	74	334	-0.030	9.47	0.040
441	60.184	61.538	0.14	0.14	1.48	79	-0.62	1.10	79	-1.60	85	0.066	99	99	1.3	0.0	168	85	63	85	63	75	334	-0.030	9.50	0.040
442	60.320	61.677	0.14	0.14	1.50	79	-0.81	1.10	79	-1.40	85	0.067	99	99	1.3	0.0	168	85	63	85	63	74	334	-0.030	9.60	0.040
443	60.457	61.817	0.14	0.14	1.48	79	-0.90	1.09	79	-1.40	85	0.067	99	99	1.3	0.0	168	85	63	85	63	74	334	-0.030	9.58	0.040
444	60.594	61.957	0.14	0.14	1.50	79	-0.62	1.09	79	-1.60	85	0.068	99	99	1.2	-0.1	167	85	63	85	63	74	334	-0.030	9.55	0.040
445	60.731	62.096	0.14	0.14	1.50	79	-0.72	1.10	79	-1.40	85	0.066	100	99	1.2	0.0	167	85	63	85	63	74	334	-0.030	9.48	0.040
446	60.866	62.236	0.13	0.14	1.48	79	-1.10	1.10	79	-1.60	85	0.067	98	99	1.2	0.0	167	85	63	85	63	75	334	-0.030	9.50	0.040
447	61.003	62.375	0.14	0.14	1.50	79	-0.71	1.10	79	-1.40	85	0.067	99	99	1.2	0.0	166	85	63	85	63	74	334	-0.030	9.44	0.040
448	61.140	62.515	0.14	0.14	1.48	79	-1.03	1.10	79	-1.50	85	0.068	99	99	1.2	0.0	167	85	63	85	63	74	334	-0.030	9.44	0.040
449	61.276	62.655	0.14	0.14	1.50	79	-0.95	1.09	79	-1.50	85	0.067	99	99	1.2	0.0	167	85	63	85	63	74	334	-0.030	9.40	0.040
450	61.413	62.794	0.14	0.14	1.49	79	-0.71	1.09	79	-1.30	85	0.066	100	99	1.1	-0.1	166	85	63	85	63	75	334	-0.030	9.38	0.040
451	61.549	62.933	0.14	0.14	1.48	79	-0.76	1.10	79	-1.60	85	0.067	99	99	1.1	0.0	166	85	63	85	63	75	333	-0.030	9.37	0.040
452	61.687	63.073	0.14	0.14	1.49	79	-0.85	1.09	79	-1.60	85	0.068	99	99	1.1	0.0	166	85	63	85	63	75	333	-0.030	9.31	0.040
453	61.822	63.212	0.14	0.14	1.48	79	-0.71	1.10	79	-1.60	85	0.067	98	99	1.1	0.0	166	85	63	85	63	75	333	-0.030	8.77	0.040
454	61.959	63.352	0.14	0.14	1.49	79	-1.05	1.10	79	-1.50	85	0.068	99	99	1.1	0.0	166	85	63	85	63	75	333	-0.030	8.61	0.040
455	62.096	63.492	0.14	0.14	1.48	79	-0.93	1.10	79	-1.50	85	0.068	99	99	1.1	0.0	166	85	63	85	63	75	333	-0.030	8.56	0.040
456	62.232	63.631	0.14	0.14	1.49	79	-0.68	1.09	79	-1.50	85	0.067	99	99	1.1	0.0	166	85	63	85	63	75	332	-0.030	8.54	0.040
457	62.369	63.771	0.14	0.14	1.50	79	-0.85	1.10	79	-1.60	85	0.067	99	99	1.0	-0.1	166	85	63	85	63	74	332	-0.030	8.45	0.040
458	62.505	63.911	0.14	0.14	1.49	79	-0.62	1.09	79	-1.50	85	0.067	99	99	1.0	0.0	165	85	63	85	63	75	332	-0.030	8.40	0.040
459	62.642	64.050	0.14	0.14	1.48	79	-0.99	1.10	79	-1.60	85	0.068	99	98	1.0	0.0	166	85	63	85	63	75	331	-0.030	8.43	0.040
460	62.778	64.189	0.14	0.14	1.48	79	-1.09	1.10	79	-1.40	85	0.068	98	98	1.0	0.0	165	85	63	85	63	74	331	-0.030	8.45	0.040
461	62.915	64.329	0.14	0.14	1.49	79	-0.67	1.10	79	-1.60	85	0.067	99	99	1.0	0.0	165	85	63	85	63	74	331	-0.030	8.31	0.040
462	63.052	64.469	0.14	0.14	1.50	79	-1.08	1.10	79	-1.40	85	0.067	99	99	1.0	0.0	165	85	63	85	63	75	330	-0.030	8.29	0.040
463	63.188	64.608	0.14	0.14	1.49	79	-1.00	1.10	79	-1.40	85	0.068	98	98	1.0	0.0	165	85	63	85	63	75	330	-0.030	8.34	0.040
464	63.325	64.748	0.14	0.14	1.49	79	-0.91	1.09	79	-1.50	85	0.067	99	99	1.0	0.0	165	85	63	85	63	75	329	-0.030	8.31	0.040
465	63.461	64.888	0.14	0.14	1.48	79	-1.10	1.10	79	-1.50	85	0.068	98	99	0.9	-0.1	164	85	63	85	63	75	329	-0.030	8.26	0.040
466	63.598	65.027	0.14	0.14	1.50	79	-0.99	1.10	79	-1.50	85	0.067	99	99	0.9	0.0	164	85	63	85	63	75	328	-0.030	8.25	0.040
467	63.735	65.167	0.14	0.14	1.47	79	-0.61	1.10	79	-1.50	85	0.067	99	99	0.9	0.0	164	85	63	85	63	75	328	-0.030	8.23	0.040
468	63.871	65.306	0.14	0.14	1.50	79	-0.65	1.09	79	-1.50	85	0.066	99	99	0.9	0.0	164	85	63	85	63	75	328	-0.030	8.24	0.040
469	64.008	65.446	0.14	0.14	1.49	79	-0.68	1.09	79	-1.60	85	0.067	99	99	0.9	0.0	163	85	63	85	63	75	327	-0.030	8.26	0.040
470	64.144	65.586	0.14	0.14	1.49	79	-0.72	1.10	79	-1.60	85	0.067	99	99	0.9	0.0	163	85	63	85	63	75	327	-0.030	8.17	0.040
471	64.281	65.725	0.14	0.14	1.50	79	-0.68	1.10	79	-1.60	84	0.067	99	99	0.9	0.0	163	85	63	85	63	75	326	-0.030	8.18	0.040
472	64.417	65.864	0.14	0.14	1.48	79	-0.83	1.10	79	-1.50	85	0.068	98	98	0.8	-0.1	163	85	63	85	63	75	326	-0.030	8.19	0.040
473	64.553	66.004	0.14	0.14	1.50	79	-1.08	1.10	79	-1.30	85	0.067	99	99	0.8	0.0	163	85	63	85	63	75	326	-0.030	8.20	0.040
474	64.691	66.144	0.14	0.14	1.47	79	-1.00	1.10	79	-1.50	85	0.068	99	99	0.8	0.0	163	85	63	85	63	75	325	-0.030	8.19	0.040
475	64.827	66.283	0.14	0.14	1.49	79	-0.61	1.09	79	-1.40	85	0.067	99	99	0.8	0.0	163	85	63	85	63	74	325	-0.030	8.22	0.040
476	64.964	66.423	0.14	0.14	1.48	79	-0.67	1.10	79	-1.50	85	0.068	99	99	0.8	0.0	162	85	63	85	63	74	325	-0.030	8.21	0.040
477	65.100	66.562	0.14	0.14	1.48	79	-0.95	1.10	79	-1.40	85	0.067	99	99	0.8	0.0	162	85	63	85	63	74	324	-0.030	8.21	0.040
478	65.237	66.701	0.14	0.14	1.50	79	-0.84	1.10	79	-1.30	84	0.067	99	99	0.8	0.0	162	85	63	85	63	75	324	-0.030	8.26	0.040
479	65.373	66.841	0.14	0.14	1.48	79	-1.01	1.10	79	-1.40	84	0.067	99	99	0.8	0.0	162	85	63	85	63	75	324	-0.030	8.24	0.040
480	65.510	66.981	0.14	0.14	1.50	79	-0.86	1.09	79	-1.30	84	0.068	99	99	0.8	0.0	162	85	63	85	63	75	323	-0.030	8.28	0.040
481	65.646	67.120	0.14	0.14	1.49	79	-1.07	1.09	79	-1.30	85	0.068	98	98	0.7	-0.1	162	85	63	85	63	75	323	-0.030	8.24	0.040
482	65.782	67.260	0.14	0.14	1.49	79	-1.00	1.10	79	-1.40	84	0.067	99	99	0.8	0.1	162	85	63	85	63	75	323	-0.030	8.26	0.040

Run:	6	Particulate Sampling Data													Fuel Weight (lb)		Temperature Data (°F)							Stack Gas Data		
Elapsed Time (min)	Gas Meter 1 (ft^3)	Gas Meter 2 (ft^3)	Sample Rate 1 (cfm)	Sample Rate 2 (cfm)	Orifice dH 1 ("H_2O)	Meter Temp 1 (°F)	Meter Vacuum 1 ("Hg)	Orifice dH 2 ("H_2O)	Meter Temp 2 (°F)	Meter Vacuum 2 ("Hg)	Dilution Tunnel (°F)	Tunnel Center dP	Pro. Rate 1	Pro. Rate 2	Scale Reading	Weight Change	Stack	Filter 1	Dryer 1	Filter 2	Dryer 2	Ambient	Avg. Surface	Draft ("H_2O)	CO_2 (%)	CO (%)
483	65.920	67.400	0.14	0.14	1.49	79	-0.74	1.10	79	-1.40	85	0.067	100	99	0.7	-0.1	162	85	63	85	63	75	322	-0.030	8.24	0.040
484	66.056	67.539	0.14	0.14	1.48	79	-0.72	1.10	79	-1.30	84	0.068	98	98	0.7	0.0	162	85	63	85	63	75	322	-0.030	8.25	0.040
485	66.192	67.678	0.14	0.14	1.50	79	-1.10	1.10	79	-1.30	85	0.067	99	99	0.7	0.0	161	85	63	85	63	75	322	-0.030	8.22	0.050
486	66.329	67.818	0.14	0.14	1.49	79	-1.08	1.09	79	-1.40	85	0.066	100	100	0.7	0.0	162	85	63	85	63	75	322	-0.030	8.33	0.050
487	66.465	67.957	0.14	0.14	1.50	79	-0.61	1.09	79	-1.60	84	0.067	99	99	0.7	0.0	161	85	63	85	63	74	321	-0.030	8.28	0.050
488	66.602	68.097	0.14	0.14	1.50	79	-0.92	1.10	79	-1.40	85	0.068	99	99	0.7	0.0	161	85	63	85	63	75	321	-0.030	8.28	0.050
489	66.738	68.237	0.14	0.14	1.49	79	-1.09	1.10	79	-1.30	85	0.067	99	99	0.6	-0.1	161	85	63	85	63	75	321	-0.030	8.22	0.050
490	66.875	68.376	0.14	0.14	1.47	79	-0.92	1.10	79	-1.40	84	0.067	99	99	0.7	0.1	161	85	63	85	63	75	321	-0.030	8.19	0.050
491	67.011	68.515	0.14	0.14	1.48	79	-0.76	1.10	79	-1.60	84	0.068	98	98	0.7	0.0	161	85	63	85	63	75	321	-0.030	8.19	0.050
492	67.148	68.655	0.14	0.14	1.49	79	-1.09	1.08	79	-1.50	84	0.067	99	99	0.7	0.0	161	85	63	85	63	75	320	-0.030	8.16	0.050
493	67.285	68.794	0.14	0.14	1.49	79	-0.66	1.09	79	-1.50	84	0.068	99	98	0.6	-0.1	161	85	63	85	63	75	320	-0.030	8.21	0.050
494	67.421	68.934	0.14	0.14	1.49	79	-1.10	1.10	79	-1.60	84	0.068	98	99	0.6	0.0	161	85	63	85	63	75	320	-0.030	8.14	0.050
495	67.558	69.074	0.14	0.14	1.49	79	-1.02	1.10	79	-1.50	84	0.067	99	99	0.6	0.0	161	85	63	85	63	75	320	-0.030	8.15	0.050
496	67.694	69.213	0.14	0.14	1.48	79	-0.64	1.09	79	-1.40	84	0.067	99	99	0.6	0.0	161	85	63	85	63	75	320	-0.030	8.14	0.050
497	67.830	69.352	0.14	0.14	1.50	79	-0.88	1.10	79	-1.40	84	0.068	98	98	0.6	0.0	161	85	63	85	63	75	319	-0.030	8.14	0.050
498	67.967	69.492	0.14	0.14	1.48	79	-1.04	1.08	79	-1.40	84	0.067	99	99	0.6	0.0	161	85	63	85	63	75	319	-0.030	8.17	0.050
499	68.104	69.631	0.14	0.14	1.49	79	-0.83	1.10	79	-1.50	85	0.068	99	98	0.6	0.0	161	85	63	85	63	75	319	-0.030	8.10	0.050
500	68.240	69.771	0.14	0.14	1.50	79	-0.62	1.09	79	-1.60	84	0.067	99	99	0.6	0.0	161	85	63	85	63	74	319	-0.030	8.10	0.050
501	68.377	69.911	0.14	0.14	1.49	79	-0.68	1.10	79	-1.60	84	0.068	99	99	0.5	-0.1	161	85	63	85	63	75	319	-0.030	8.03	0.040
502	68.514	70.050	0.14	0.14	1.48	79	-1.08	1.10	79	-1.40	84	0.067	99	99	0.5	0.0	160	85	63	85	63	75	319	-0.030	8.05	0.040
503	68.650	70.189	0.14	0.14	1.48	79	-0.96	1.10	79	-1.50	84	0.068	98	98	0.5	0.0	160	85	63	85	63	75	318	-0.030	8.07	0.050
504	68.786	70.329	0.14	0.14	1.50	79	-0.72	1.08	79	-1.60	84	0.067	99	99	0.5	0.0	160	85	63	85	63	74	318	-0.030	8.06	0.050
505	68.923	70.468	0.14	0.14	1.47	79	-0.93	1.10	79	-1.50	85	0.067	99	99	0.5	0.0	160	85	63	85	63	75	318	-0.030	8.10	0.050
506	69.059	70.608	0.14	0.14	1.50	79	-0.65	1.09	79	-1.30	84	0.067	99	99	0.5	0.0	160	85	63	85	63	75	318	-0.030	8.08	0.050
507	69.196	70.748	0.14	0.14	1.49	79	-0.69	1.10	79	-1.40	84	0.068	99	99	0.5	0.0	159	85	63	85	63	75	318	-0.030	8.06	0.050
508	69.332	70.887	0.14	0.14	1.49	79	-0.71	1.10	79	-1.60	84	0.067	99	99	0.5	0.0	159	85	63	85	63	75	318	-0.030	8.07	0.040
509	69.469	71.026	0.14	0.14	1.50	79	-1.07	1.10	79	-1.40	84	0.067	99	99	0.4	-0.1	159	85	63	85	63	75	317	-0.030	8.04	0.040
510	69.605	71.166	0.14	0.14	1.48	79	-0.61	1.09	79	-1.50	84	0.067	99	99	0.4	0.0	159	85	63	85	63	75	317	-0.030	8.09	0.050
511	69.742	71.305	0.14	0.14	1.50	79	-1.09	1.09	79	-1.50	84	0.067	99	99	0.4	0.0	159	85	63	85	63	75	317	-0.030	8.05	0.050
512	69.879	71.445	0.14	0.14	1.49	79	-0.61	1.09	79	-1.30	84	0.067	99	99	0.4	0.0	160	85	63	85	63	75	317	-0.030	8.09	0.050
513	70.015	71.585	0.14	0.14	1.49	79	-0.92	1.10	79	-1.50	85	0.068	98	99	0.4	0.0	159	85	63	85	63	75	317	-0.030	8.06	0.050
514	70.152	71.724	0.14	0.14	1.49	79	-0.89	1.10	79	-1.60	84	0.067	99	99	0.4	0.0	159	85	63	85	63	74	317	-0.030	8.07	0.050
515	70.288	71.863	0.14	0.14	1.49	79	-0.86	1.10	79	-1.50	84	0.066	99	99	0.4	0.0	159	85	63	85	63	73	317	-0.030	8.12	0.050
516	70.424	72.003	0.14	0.14	1.50	79	-1.06	1.09	79	-1.50	84	0.067	99	99	0.4	0.0	159	85	63	85	63	74	317	-0.030	8.14	0.050
517	70.561	72.142	0.14	0.14	1.47	79	-1.04	1.09	79	-1.30	84	0.067	99	99	0.4	0.0	159	85	63	85	63	75	317	-0.030	8.10	0.050
518	70.698	72.282	0.14	0.14	1.50	79	-1.05	1.09	79	-1.30	84	0.067	99	99	0.4	0.0	159	85	63	85	63	75	316	-0.030	8.12	0.050
519	70.834	72.422	0.14	0.14	1.50	79	-1.06	1.10	79	-1.30	84	0.068	98	99	0.3	-0.1	159	85	63	85	63	75	316	-0.030	8.09	0.040
520	70.971	72.561	0.14	0.14	1.49	79	-1.09	1.10	79	-1.40	84	0.067	99	99	0.3	0.0	159	85	63	85	63	75	316	-0.030	8.08	0.040
521	71.108	72.700	0.14	0.14	1.50	79	-1.01	1.10	79	-1.60	84	0.068	99	98	0.3	0.0	159	85	63	85	63	75	316	-0.030	8.09	0.050
522	71.244	72.841	0.14	0.14	1.48	79	-0.72	1.10	79	-1.50	84	0.068	98	99	0.3	0.0	159	85	63	85	63	74	316	-0.030	8.05	0.040
523	71.380	72.980	0.14	0.14	1.49	79	-0.86	1.10	79	-1.30	84	0.066	99	99	0.3	0.0	159	85	63	85	63	75	316	-0.030	8.04	0.040
524	71.517	73.119	0.14	0.14	1.49	79	-0.61	1.09	79	-1.30	84	0.067	99	99	0.3	0.0	158	85	63	85	63	75	316	-0.030	8.04	0.040
525	71.653	73.259	0.14	0.14	1.50	79	-0.82	1.10	79	-1.30	84	0.067	99	99	0.3	0.0	158	85	63	85	63	75	316	-0.030	8.00	0.040
526	71.791	73.399	0.14	0.14	1.50	79	-1.01	1.10	79	-1.40	84	0.067	100	99	0.3	0.0	158	85	63	85	63	75	316	-0.030	8.03	0.040
527	71.926	73.538	0.14	0.14	1.49	79	-0.64	1.10	79	-1.40	84	0.067	98	99	0.2	-0.1	158	85	63	85	63	75	316	-0.030	7.99	0.040
528	72.063	73.678	0.14	0.14	1.50	79	-1.01	1.10	79	-1.60	84	0.068	99	99	0.3	0.1	158	85	63	85	63	74	315	-0.030	7.99	0.040
529	72.200	73.818	0.14	0.14	1.48	79	-0.81	1.10	79	-1.60	84	0.068	99	99	0.2	-0.1	159	85	63	85	63	74	315	-0.020	7.97	0.040
530	72.337	73.957	0.14	0.14	1.49	79	-1.07	1.10	79	-1.40	84	0.067	99	99	0.2	0.0	158	85	63	85	63	74	315	-0.030	7.96	0.040
531	72.474	74.097	0.14	0.14	1.50	79	-1.10	1.10	79	-1.30	84	0.068	99	99	0.2	0.0	158	85	63	85	63	75	315	-0.030	7.96	0.040
532	72.610	74.237	0.14	0.14	1.49	79	-1.09	1.10	79	-1.30	84	0.068	98	99	0.2	0.0	158	85	63	85	63	75	315	-0.030	7.94	0.040
533	72.747	74.377	0.14	0.14	1.49	79	-0.77	1.10	79	-1.30	84	0.068	99	99	0.2	0.0	158	85	63	85	63	75	315	-0.030	7.94	0.040
534	72.883	74.516	0.14	0.14	1.48	79	-0.81	1.10	79	-1.60	84	0.066	99	99	0.2	0.0	158	85	63	85	63	75	315	-0.030	7.94	0.040
535	73.020	74.656	0.14	0.14	1.50	79	-1.09	1.09	79	-1.60	84	0.067	99	99	0.2	0.0	158	85	63	85	63	75	315	-0.030	7.94	0.040
536	73.157	74.796	0.14	0.14	1.48	79	-1.02	1.10	79	-1.60	85	0.067	99	99	0.2	0.0	159	85	63	85	63	75	315	-0.030	7.94	0.040
537	73.293	74.935	0.14	0.14	1.50	79	-1.07	1.09	79	-1.50	85	0.067	99	99	0.2	0.0	158	85	63	85	63	74	314	-0.030	7.88	0.040

Run:	6	Particulate Sampling Data													Fuel Weight (lb)		Temperature Data (°F)							Stack Gas Data		
Elapsed Time (min)	Gas Meter 1 (ft^3)	Gas Meter 2 (ft^3)	Sample Rate 1 (cfm)	Sample Rate 2 (cfm)	Orifice dH 1 ("H_2O)	Meter Temp 1 (°F)	Meter Vacuum 1 ("Hg)	Orifice dH 2 ("H_2O)	Meter Temp 2 (°F)	Meter Vacuum 2 ("Hg)	Dilution Tunnel (°F)	Tunnel Center dP	Pro. Rate 1	Pro. Rate 2	Scale Reading	Weight Change	Stack	Filter 1	Dryer 1	Filter 2	Dryer 2	Ambient	Avg. Surface	Draft ("H_2O)	CO_2 (%)	CO (%)
538	73.431	75.075	0.14	0.14	1.48	79	-0.87	1.10	79	-1.40	84	0.067	100	99	0.2	0.0	158	85	63	85	63	75	314	-0.030	7.86	0.040
539	73.567	75.215	0.14	0.14	1.49	79	-0.89	1.10	79	-1.40	85	0.067	99	99	0.2	0.0	158	85	63	85	63	75	314	-0.030	7.87	0.040
540	73.703	75.354	0.14	0.14	1.50	79	-1.10	1.10	79	-1.60	85	0.067	99	99	0.2	0.0	158	85	63	85	63	75	314	-0.030	7.89	0.040
541	73.840	75.494	0.14	0.14	1.48	79	-1.02	1.10	79	-1.50	85	0.067	99	99	0.2	0.0	158	85	63	85	63	75	314	-0.030	7.87	0.050
542	73.976	75.634	0.14	0.14	1.50	79	-1.06	1.10	79	-1.60	85	0.067	99	99	0.2	0.0	158	85	63	85	63	76	314	-0.020	7.84	0.040
543	74.113	75.773	0.14	0.14	1.50	79	-0.88	1.09	79	-1.60	85	0.067	99	99	0.2	0.0	158	85	63	85	63	75	314	-0.020	7.81	0.040
544	74.250	75.913	0.14	0.14	1.49	79	-0.69	1.10	79	-1.60	85	0.067	99	99	0.2	0.0	157	85	63	85	63	75	313	-0.020	7.75	0.040
545	74.387	76.052	0.14	0.14	1.50	79	-0.81	1.10	79	-1.60	85	0.067	99	99	0.2	0.0	157	85	63	85	63	75	313	-0.030	7.70	0.040
546	74.522	76.192	0.14	0.14	1.49	79	-0.64	1.10	79	-1.50	85	0.067	98	99	0.2	0.0	157	85	63	85	63	76	313	-0.020	7.71	0.040
547	74.659	76.331	0.14	0.14	1.50	79	-0.96	1.10	79	-1.40	85	0.067	99	99	0.1	-0.1	157	85	63	85	63	76	313	-0.020	7.76	0.050
548	74.796	76.471	0.14	0.14	1.49	79	-1.02	1.10	79	-1.30	85	0.067	99	99	0.1	0.0	157	85	63	85	63	76	313	-0.020	7.75	0.050
549	74.932	76.610	0.14	0.14	1.49	79	-0.88	1.09	79	-1.60	85	0.067	99	99	0.1	0.0	158	85	63	85	63	76	313	-0.020	7.75	0.050
550	75.069	76.750	0.14	0.14	1.50	79	-1.05	1.09	79	-1.40	86	0.067	99	99	0.1	0.0	157	85	63	85	63	75	313	-0.030	7.69	0.040
551	75.205	76.890	0.14	0.14	1.49	79	-0.67	1.10	79	-1.60	85	0.068	98	99	0.1	0.0	157	85	63	85	63	75	312	-0.030	7.68	0.040
552	75.342	77.029	0.14	0.14	1.50	79	-0.94	1.10	79	-1.50	86	0.067	99	99	0.1	0.0	157	85	63	85	63	75	312	-0.030	7.67	0.040
553	75.479	77.169	0.14	0.14	1.48	79	-1.10	1.10	79	-1.60	86	0.067	99	99	0.1	0.0	157	85	63	85	63	76	312	-0.030	7.51	0.040
554	75.615	77.308	0.14	0.14	1.49	79	-1.06	1.09	79	-1.30	86	0.067	99	99	0.1	0.0	157	85	63	85	63	76	311	-0.030	7.43	0.040
555	75.752	77.447	0.14	0.14	1.49	79	-0.69	1.09	79	-1.60	86	0.068	99	98	0.1	0.0	157	85	63	85	63	76	311	-0.030	7.37	0.040
556	75.887	77.587	0.14	0.14	1.49	79	-0.64	1.09	79	-1.40	86	0.067	98	99	0.1	0.0	157	85	63	85	63	75	311	-0.030	7.36	0.040
557	76.025	77.727	0.14	0.14	1.49	79	-0.79	1.09	79	-1.50	86	0.067	100	99	0.1	0.0	157	85	63	85	63	75	311	-0.030	7.31	0.040
558	76.160	77.865	0.13	0.14	1.49	79	-0.89	1.09	79	-1.50	86	0.068	97	97	0.1	0.0	157	85	64	85	63	76	310	-0.030	7.30	0.040
559	76.297	78.005	0.14	0.14	1.49	79	-0.88	1.10	79	-1.40	86	0.067	99	99	0.1	0.0	157	85	64	86	63	76	310	-0.030	7.26	0.040
560	76.434	78.145	0.14	0.14	1.48	79	-0.95	1.09	79	-1.40	86	0.067	99	99	0.1	0.0	157	86	64	86	63	76	310	-0.020	7.22	0.040
561	76.570	78.284	0.14	0.14	1.49	79	-1.07	1.09	79	-1.60	86	0.068	98	98	0.1	0.0	157	86	64	86	63	75	310	-0.020	7.23	0.040
562	76.707	78.424	0.14	0.14	1.50	79	-0.68	1.09	79	-1.50	86	0.068	99	99	0.1	0.0	156	86	64	86	63	76	309	-0.020	7.23	0.040
563	76.843	78.563	0.14	0.14	1.49	79	-0.76	1.09	79	-1.30	86	0.067	99	99	0.1	0.0	157	86	64	86	63	75	309	-0.020	7.20	0.040
564	76.980	78.702	0.14	0.14	1.48	79	-1.06	1.10	79	-1.50	86	0.067	99	99	0.0	-0.1	156	86	64	86	63	76	308	-0.020	7.21	0.040
Avg/Tot	76.980	78.702	0.14	0.14	1.49	79	-0.87	1.09	79	-1.48	90	0.07	100	100			213	85	64	85	64	74	339	-0.038	9.72	0.051

Wood Heater Lab Data - ASTM E2515

Manufacturer:	Kuma	Equipment Numbers:	283A, 592, 637
Model:	Aspen LE		
Tracking No.:	2357		
Project No.:	0123WM011E		
Run #:	6	Technician Signature:	
Date:	3/6/19		

	Sample Component	Sample #	Tare, mg	Final, mg	Particulate, mg
TRAIN 1 (First hour emissions)	A. Front filter catch	T140S	89.1	90.3	1.2
	B. Rear filter catch				0.0
	C. Probe catch*				0.0
	D. Filter seals catch*				0.0
TRAIN 1 (Remainder of test)	A. Front filter catch	T130AP	181.9	182.9	1.0
	B. Rear filter catch				0.0
	C. Probe catch*	14	114548.3	114548.4	0.1
	D. Filter seals catch*	R751	3313.4	3313.7	0.3
TRAIN 2	A. Front filter catch	T130BP	178.1	180.6	2.5
	B. Rear filter catch				0.0
	C. Probe catch*	20	114253.0	114253.0	0.0
	D. Filter seals catch*	R752	3532.4	3532.7	0.3
AMBIENT	A. Front filter catch*	D667	120.8	120.8	0.0

1st hour Sub-Total, mg:	1.2
Remainder Sub-Total, mg:	1.4
Train 1 Aggregate, mg:	2.6
Train 2 Aggregate, mg:	2.8
Ambient Aggregate, mg:	0.0

OMNI-Test Laboratories, Inc

Wood Heater Test Data - ASTM E2515 - Proportion Rate Validation

Run:	6	(10 min)

Manufacturer: Kuma
Model: Aspen LE
Tracking No.: 2357
Project No.: 0123WM011E
Test Date: 06-Mar-19

Total Sampling Time: 564 min
Recording Interval: 10 min

Run:	6	Particulate Sampling Data												
Elapsed Time (min)	Gas Meter 1 (ft^3)	Gas Meter 2 (ft^3)	Sample Rate 1 (cfm)	Sample Rate 2 (cfm)	Orifice dH 1 ("H_2O)	Meter Temp 1 (°F)	Meter Vacuum 1 ("Hg)	Orifice dH 2 ("H_2O)	Meter Temp 2 (°F)	Meter Vacuum 2 ("Hg)	Dilution Tunnel (°F)	Tunnel Center dP	Pro. Rate 1	Pro. Rate 2
0														
10	1.324	1.375	0.13	0.14	1.48	78	-0.79	1.09	78	-1.40	117	0.064	100	102
20	2.679	2.766	0.14	0.14	1.49	79	-0.83	1.10	79	-1.40	106	0.063	102	103
30	4.041	4.164	0.14	0.14	1.49	79	-0.67	1.10	79	-1.30	103	0.065	101	101
40	5.400	5.558	0.14	0.14	1.46	79	-1.05	1.09	79	-1.30	102	0.066	100	100
50	6.757	6.951	0.14	0.14	1.48	80	-0.66	1.09	79	-1.40	100	0.065	100	101
60	8.114	8.343	0.14	0.14	1.47	80	-0.64	1.10	80	-1.40	99	0.065	100	100
70	9.482	9.737	0.14	0.14	1.48	80	-0.62	1.10	80	-1.40	97	0.065	101	100
80	10.850	11.133	0.14	0.14	1.49	80	-0.83	1.09	80	-1.60	96	0.067	99	99
90	12.218	12.530	0.14	0.14	1.50	80	-1.04	1.10	80	-1.40	96	0.065	101	100
100	13.586	13.926	0.14	0.14	1.50	80	-1.07	1.09	80	-1.50	95	0.065	100	100
110	14.954	15.323	0.14	0.14	1.50	80	-0.62	1.10	80	-1.40	94	0.065	100	100
120	16.322	16.720	0.14	0.14	1.48	80	-0.70	1.10	80	-1.40	94	0.066	100	99
130	17.690	18.117	0.14	0.14	1.49	80	-0.64	1.09	80	-1.60	94	0.065	100	100
140	19.055	19.511	0.14	0.14	1.48	80	-0.76	1.10	80	-1.50	94	0.066	99	99
150	20.421	20.907	0.14	0.14	1.48	80	-0.67	1.09	80	-1.60	95	0.065	100	100
160	21.786	22.303	0.14	0.14	1.49	80	-1.02	1.10	80	-1.60	93	0.066	99	99
170	23.152	23.699	0.14	0.14	1.49	80	-1.02	1.09	80	-1.60	93	0.065	100	100
180	24.518	25.096	0.14	0.14	1.47	80	-0.61	1.09	80	-1.50	92	0.066	99	99
190	25.883	26.491	0.14	0.14	1.48	80	-0.61	1.10	80	-1.60	92	0.066	99	99
200	27.249	27.887	0.14	0.14	1.48	80	-1.01	1.10	80	-1.60	91	0.067	98	98
210	28.614	29.283	0.14	0.14	1.49	80	-1.04	1.10	80	-1.40	91	0.066	99	99
220	29.980	30.678	0.14	0.14	1.49	80	-1.09	1.10	80	-1.40	91	0.066	99	99
230	31.347	32.075	0.14	0.14	1.50	79	-0.96	1.09	80	-1.60	90	0.067	99	98
240	32.714	33.471	0.14	0.14	1.49	79	-1.04	1.10	80	-1.60	89	0.065	100	100
250	34.080	34.868	0.14	0.14	1.48	80	-0.61	1.10	80	-1.40	89	0.065	100	100

File - Run 6 Med 3053 Emissions, Tab - Data Entry 10 Min

Run:	6	Particulate Sampling Data												
Elapsed Time (min)	Gas Meter 1 (ft^3)	Gas Meter 2 (ft^3)	Sample Rate 1 (cfm)	Sample Rate 2 (cfm)	Orifice dH 1 ("H_2O)	Meter Temp 1 (°F)	Meter Vacuum 1 ("Hg)	Orifice dH 2 ("H_2O)	Meter Temp 2 (°F)	Meter Vacuum 2 ("Hg)	Dilution Tunnel (°F)	Tunnel Center dP	Pro. Rate 1	Pro. Rate 2
260	35.447	36.265	0.14	0.14	1.48	80	-1.09	1.10	80	-1.50	88	0.066	99	99
270	36.814	37.662	0.14	0.14	1.49	79	-0.72	1.10	80	-1.40	88	0.066	99	99
280	38.182	39.059	0.14	0.14	1.49	80	-0.64	1.10	80	-1.50	87	0.066	99	99
290	39.550	40.456	0.14	0.14	1.50	80	-1.08	1.10	80	-1.40	87	0.066	99	99
300	40.917	41.853	0.14	0.14	1.50	80	-0.72	1.09	80	-1.40	86	0.065	100	100
310	42.285	43.250	0.14	0.14	1.50	79	-1.08	1.10	79	-1.50	86	0.066	99	99
320	43.654	44.647	0.14	0.14	1.49	79	-0.94	1.09	79	-1.40	86	0.066	99	99
330	45.021	46.044	0.14	0.14	1.49	79	-0.78	1.11	79	-1.40	85	0.068	97	97
340	46.389	47.442	0.14	0.14	1.50	79	-0.91	1.10	79	-1.50	85	0.068	98	97
350	47.756	48.839	0.14	0.14	1.48	79	-0.68	1.09	79	-1.60	85	0.068	97	97
360	49.123	50.236	0.14	0.14	1.49	79	-0.62	1.10	79	-1.40	85	0.068	97	97
370	50.489	51.632	0.14	0.14	1.49	79	-1.03	1.10	79	-1.50	84	0.068	97	97
380	51.856	53.028	0.14	0.14	1.50	79	-0.84	1.10	79	-1.50	85	0.066	99	99
390	53.221	54.422	0.14	0.14	1.47	79	-0.83	1.09	79	-1.30	85	0.066	99	99
400	54.585	55.817	0.14	0.14	1.47	79	-0.77	1.10	79	-1.50	85	0.066	99	99
410	55.950	57.212	0.14	0.14	1.49	79	-0.98	1.10	79	-1.40	85	0.068	97	97
420	57.316	58.607	0.14	0.14	1.49	79	-1.01	1.10	79	-1.40	85	0.066	99	99
430	58.682	60.003	0.14	0.14	1.49	79	-0.62	1.10	79	-1.30	85	0.068	97	97
440	60.048	61.399	0.14	0.14	1.50	79	-1.05	1.10	79	-1.50	85	0.067	98	98
450	61.413	62.794	0.14	0.14	1.49	79	-0.71	1.09	79	-1.30	85	0.066	99	99
460	62.778	64.189	0.14	0.14	1.48	79	-1.09	1.10	79	-1.40	85	0.068	97	97
470	64.144	65.586	0.14	0.14	1.49	79	-0.72	1.10	79	-1.60	85	0.067	98	98
480	65.510	66.981	0.14	0.14	1.50	79	-0.86	1.09	79	-1.30	84	0.068	97	97
490	66.875	68.376	0.14	0.14	1.47	79	-0.92	1.10	79	-1.40	84	0.067	98	98
500	68.240	69.771	0.14	0.14	1.50	79	-0.62	1.09	79	-1.60	84	0.067	98	98
510	69.605	71.166	0.14	0.14	1.48	79	-0.61	1.09	79	-1.50	84	0.067	98	98
520	70.971	72.561	0.14	0.14	1.49	79	-1.09	1.10	79	-1.40	84	0.067	98	98
530	72.337	73.957	0.14	0.14	1.49	79	-1.07	1.10	79	-1.40	84	0.067	98	98
540	73.703	75.354	0.14	0.14	1.50	79	-1.10	1.10	79	-1.60	85	0.067	98	98
550	75.069	76.750	0.14	0.14	1.50	79	-1.05	1.09	79	-1.40	86	0.067	98	98
560	76.434	78.145	0.14	0.14	1.48	79	-0.95	1.09	79	-1.40	86	0.067	98	98

Run:	6	Particulate Sampling Data												
Elapsed Time (min)	Gas Meter 1 (ft^3)	Gas Meter 2 (ft^3)	Sample Rate 1 (cfm)	Sample Rate 2 (cfm)	Orifice dH 1 ("H_2O)	Meter Temp 1 (°F)	Meter Vacuum 1 ("Hg)	Orifice dH 2 ("H_2O)	Meter Temp 2 (°F)	Meter Vacuum 2 ("Hg)	Dilution Tunnel (°F)	Tunnel Center dP	Pro. Rate 1	Pro. Rate 2
Avg/Tot	76.434	78.145	0.14	0.14	1.49	79	-0.85	1.10	79	-1.46	90	0.07	99	99

Client: Kuma
Model: Aspen LE
Project: 0123WM011E

Medium Burn 6

Required Load Density (WB)	12	lb/ft^3
Usable Firebox Volume	1.74	ft^3
Total Load Target	20.83	lb

Load Parameters

	Target Range (lb)
Total Load	19.79 - 21.87
Charcoal Bed	2.05 - 4.05
Core Load	9.37 - 13.54
Core Load Each	3.12 - 5.21
Remainder Load	7.29 - 11.46
Remainder Load Each	2.08 - 6.25

Load Inputs

	Weight (lb)	Moisture Readings (% DB)			Average
		1	2	3	
Core Load Piece 1	4.8	21.8	22.5	22.1	22.1
Core Load Piece 2	3.3	19.2	17.4	23.7	20.1
Core Load Piece 3	3.5	18.8	17.6	22.1	19.5
Remainder Load Piece 1	2.7	19.1	17.8	22.4	19.8
Remainder Load Piece 2	5.7	22.5	21	24.9	22.8
Remainder Load Piece 3					
Test Load Total	19.98				
Core Total	11.59				
Remainder Total	8.39				
Actual Charcoal Bed	2.4				
Actual Fuel Load Ending	0.0				

Input Validations

	Moisture (% DB)		Weight (lb, WB)	
Core Load Piece 1	22.1	In Range	4.8	In Range
Core Load Piece 2	20.1	In Range	3.3	In Range
Core Load Piece 3	19.5	In Range	3.5	In Range
Remainder Load Piece 1	19.8	In Range	2.7	In Range
Remainder Load Piece 2	22.8	In Range	5.7	In Range
Remainder Load Piece 3	NA	NA	NA	NA
Total Load % DB	21.2	In Range		

Client: Kuma
Model: Aspen LE
Project: 0123WM011E

Medium Burn 6

Actual Charcoal Bed		2.4	In Range
Actual Fuel Load Ending		0.0	Valid Test
	Ratios		
Remainder Load Weight Ratio	47%	In Range	≤ 67%
Core % of Total Wt.	58%	In Range	45-65%
Remainder % of Total Wt.	42%	In Range	35-55%
Actual Load % of Target	96%	In Range	95-105%

Additional Information

WB Moisture	17.5	%
Total Test Load WB	16.49	kg
Total Fuel Burned	16.5	lb
Total Fuel Burned During Test	20.0	≥ 90%
Actual Fuel Load Density	11.5	lb/ft^3

OMNI-Test Laboratories, Inc.

ASTM E2780 Wood Heater Run Sheets

Client: Kuma Project Number: 0123WM011E Run Number: 6 Med
Model: Aspen LE Tracking Number: 2357 Date: 3/6/2019
Test Crew: Aaron Kravitz
OMNI Equipment ID numbers: 132, 283A, 371, 372, 410, 420, 559, 592, 650, 637

Wood Heater Run Notes

Air Control Settings

Primary:

Open 13/32"

Secondary: ***Fixed***

Tertiary/Pilot: ***Fixed***

Fan: ***On low***

Test Notes

Start up procedures & Timeline:

High:

Ignition:	*20 s w/ torch*
Bypass:	*15 Min*
Startup Fuel:	*Included w/ kindling*
Residual:	*1.9 lb*
Test Loading:	*Fuel loaded from ET= 48-50*
	Door closed at ET=50

Med/Low:

Coal Bed:	*2.4 lb*
Test Loading:	*Loaded by 1:30*
	Door 1:45
	Primary 15:00
	Fan 30:00

Time	Notes
30	*Fan on*
60-61	*Changed filter A*

Technician Signature: Date: 3/13/19

OMNI-Test Laboratories, Inc.

ASTM E2780 Wood Heater Run Sheets

Client: Kuma Project Number: 0123WM011E Run Number: 6 Med
Model: Aspen LE Tracking Number: 2357 Date: 3/6/2019
Test Crew: Aaron Kravitz
OMNI Equipment ID numbers: 132, 283A, 371, 372, 410, 420, 559, 592, 650, 637

ASTM E2515 Sampling Information

Test Location: *Myren Consulting* Clock Time @ ET=0: *14:34*

Span Gas Concentrations: **CO_2(%):** *12.40* **CO(%):** *2.480* **CO(ppm):** N/A

Test Run Validation Checks	Pre Test	Post Test
Zero Stack Gas Leakage	✓	✓
Zero Pitot Line Leakage	✓	✓
Zero Induced Draft	✓	
100% Smoke Capture	✓	

Test Run Validation Measurements	Pre Test		Post Test	
Scale Audit (lbs)	*10.0*		*10.0*	
CO_2 % (Zero/Span)	*-0.02*	*12.41*	*0.06*	*12.39*
CO % (Zero/Span)	*0.000*	*2.481*	*-0.011*	*2.441*
CO ppm (Zero/Span)	*N/A*	*N/A*	*N/A*	*N/A*
Sample A Leakage (cfm @"Hg)	∅		*0 @*	
Sample B Leakage (cfm @"Hg)	∅		*0 @*	
Room Air Velocity (ft/min)	*<50*		*<50*	
Barometric Pressure ("Hg)	*27.94*		*27.91*	
Relative Humidity (%)	*17%*		*23%*	
Tunnel Static ("H_2O)	*-0.13*		*-0.13*	

Last Cleaning Dates

Flue Pipe	*2/25/19*
Dilution Tunnel	*2/25/19*
Sample Dryers	

Dilution Tunnel Traverse

Traverse Point	1	2	3	4	5	6	7	8	Center
Δp ("H_2O)	*0.056*	*0.064*	*0.064*	*0.060*	*0.058*	*0.062*	*0.060*	*0.058*	*0.068*
T (°F)	*110*	*110*	*110*	*110*	*110*	*110*	*110*	*110*	*110*

Technician Signature: Date: 3/13/19

2.3 - Sample Analysis & Tares

Analysis Worksheets
Tared Filter, Probe, and O-Ring Data

OMNI-Test Laboratories, Inc.

Wood Heater Run Sheets

Client: Kuma Stoves Project Number: 0123WM011E Run Number: 1
Model: ~~K-180~~ Aspen LE Tracking Number: 2357 Date: 2/26/19
Test Crew: B Davis
OMNI Equipment ID numbers: 637, 283A, 592, 650, 420, 410, 371, 372, 132

ASTM E2515 Lab Sheet

Assembled By:

B Davis

Date/Time in Dessicator:

3/1/19 1520

	Weighing #1	Weighing #2	Weighing #3	Weighing #4	Weighing #5
	Date/Time: 3/1/19 0919	Date/Time: 3/12/19 0905	Date/Time: 3/13/19 0847	Date/Time:	Date/Time:
	R/H %: 15.7	R/H %: 16.1	R/H %: 16.1	R/H %:	R/H %:
	Temp: 70.9	Temp: 71.5	Temp: 70.3	Temp:	Temp:
	200 mg Audit: 200.1	200 mg Audit: 200.1	200 mg Audit: N/A	200 mg Audit:	200 mg Audit:
	2 g Audit: 2000.2	2 g Audit: 2000.3	2 g Audit: 2000.3	2 g Audit:	2 g Audit:
	100 g Audit: 99997.8	100 g Audit 99998.0	100 g Audit N/A	100 g Audit	100 g Audit
	Initials: BD	Initials: BD	Initials: BD	Initials:	Initials:

Train	Element	ID #	Tare (mg)	Weight (mg)	Weight (mg)	Weight (mg)	Weight (mg)	Weight (mg)
A (First Hour)	Front Filter	T124S	88.7	91.1	91.1	✓		
	Rear Filter							
	Probe							
	O-Ring Set							
A (Remainder)	Front Filter	T53AP	185.5	187.1	187.1	✓		
	Rear Filter							
	Probe	21	114391.3	114392.4	114392.4	✓		
	O-Ring Set	R727	3304.1 ~~11~~	3306.2	3304.5	3304.3	✓	
B	Front Filter	T53BP	186.2	190.2	190.2	✓		
	Rear Filter	T131S	88.0	88.8	88.8	✓		
	Probe	22	114343.1	114344.4	114344.3	✓		
	O-Ring Set	R728	3578.8	3580.3	3578.8	3578.7	✓	
BG	Filter	D663	120.6	120.7	120.7	✓		

Technician Signature: BD Date: 4/17/19

OMNI-Test Laboratories, Inc.

Wood Heater Run Sheets

Client: Kuma Stoves Project Number: 0123WM011E Run Number: 2
Model: K-180 Aspen LE Tracking Number: 2357 Date: 2/26/19
Test Crew: B Davis
OMNI Equipment ID numbers: 637, 202A, 593, 650, 420, 410, 371, 372, 132

ASTM E2515 Lab Sheet

Assembled By:

B Davis

Date/Time in Dessicator:

3/1/19 1520

	Weighing #1	Weighing #2	Weighing #3	Weighing #4	Weighing #5
	Date/Time: 3/11/19 0919	Date/Time: 3/14/19 0905	Date/Time: 3/13/19 0847	Date/Time:	Date/Time:
	R/H %: 15.7	R/H %: 16.1	R/H %: 16.1	R/H %:	R/H %:
	Temp: 70.9	Temp: 71.5	Temp: 70.3	Temp:	Temp:
	200 mg Audit: 200.1	200 mg Audit: 200.1	200 mg Audit: N/A	200 mg Audit:	200 mg Audit:
	2 g Audit: 2000.2	2 g Audit: 2000.3	2 g Audit: 2000.3	2 g Audit:	2 g Audit:
	100 g Audit: 99997.8	100 g Audit 99998.0	100 g Audit N/A	100 g Audit	100 g Audit
	Initials: BL	Initials: BL	Initials: BL	Initials:	Initials:

Train	Element	ID #	Tare (mg)	Weight (mg)	Weight (mg)	Weight (mg)	Weight (mg)	Weight (mg)
A (First Hour)	Front Filter	T1325	87.9	88.7	88.7 ✓			
	Rear Filter							
	Probe							
	O-Ring Set							
A (Remainder)	Front Filter	T127AP	167.6	169.0	168.8 ✓			
	Rear Filter							
	Probe	23	114075.9	114077.1	114076.9 ✓			
	O-Ring Set	R729	3402.2	3403.6	3402.1	3402.1 ✓		
B	Front Filter	T127BP	180.3	183.0	182.9 ✓			
	Rear Filter							
	Probe	31	114366.8 3324.9	114367.6	114367.4 ✓			
	O-Ring Set	R730	3324.9	3326.3	3325.0	3324.9 ✓		
BG	Filter	D664	121.5	121.6	121.5 ✓			

Technician Signature: BD Date: 4/8/19

OMNI-Test Laboratories, Inc.

Wood Heater Run Sheets

Client: Kuma Stoves Project Number: 0123WM011E Run Number: 4
Model: K-180 Aspen LE Tracking Number: 2357 Date: 2/28/19
Test Crew: D Davis
OMNI Equipment ID numbers: 637, 283A, 592, 650, 420, 410, 371, 372, 132

ASTM E2515 Lab Sheet

Assembled By: B Davis

Date/Time in Dessicator: 3/1/19 1520

	Weighing #1	Weighing #2	Weighing #3	Weighing #4	Weighing #5
	Date/Time: 3/11/19 0919	Date/Time: 3/12/19 0905	Date/Time: 3/13/19 0847	Date/Time:	Date/Time:
	R/H %: 15.7	R/H %: 16.1	R/H %: 16.1	R/H %:	R/H %:
	Temp: 70.9	Temp: 71.5	Temp: 70.3	Temp:	Temp:
	200 mg Audit: 200.1	200 mg Audit: 200.1	200 mg Audit: N/A	200 mg Audit:	200 mg Audit:
	2 g Audit: 2000.2	2 g Audit: 2000.3	2 g Audit: 2000.3	2 g Audit:	2 g Audit:
	100 g Audit: 99997.8	100 g Audit 99998.0	100 g Audit N/A	100 g Audit	100 g Audit
	Initials: BL	Initials: BL	Initials: BC	Initials:	Initials:

Train	Element	ID #	Tare (mg)	Weight (mg)	Weight (mg)	Weight (mg)	Weight (mg)	Weight (mg)
A (First Hour)	Front Filter	T133S	87.2	96.4	96.5 ✓			
	Rear Filter	T135S	91.1	103.2	103.2 ✓			
	Probe							
	O-Ring Set							
A (Remainder)	Front Filter	T128AP	181.2	196.4	196.3			
	Rear Filter	T138S	90.5	93.3	93.1 ✓			
	Probe	32	114740.8	114741.9	114741.7 ✓			
	O-Ring Set	R731	3308.8	3310.1	3308.8 ✓	3308.7 ✓		
B	Front Filter	T128BP	181.2	191.9	191.7 ✓			
	Rear Filter	T134S T136S	87.6 90.3	99.4 105.4	99.5 ✓ 105.3 ✓			
	Probe	33	113942.9	113944.1	113944.1 ✓			
	O-Ring Set	R732	3262.7	3264.0	3262.8	3262.7 ✓		
BG	Filter	D665	120.1	119.9	120.0 ✓			
		T137S	90.9	99.0	99.1 ✓			

Technician Signature: B D Davis Date: 4/17/19

OMNI-Test Laboratories, Inc.

ASTM E2780 Wood Heater Run Sheets

Client: Kuma Project Number: 0123WM011E Run Number: 5 Med

Model: Aspen LE Tracking Number: 2357 Date: 3/4/2019

Test Crew: Aaron Kravitz

OMNI Equipment ID numbers: 132, 283A, 371, 372, 410, 420, 559, 592, 650, 637

ASTM E2515 Lab Sheet

Assembled By:

A. Kravitz

Date/Time in Desiccator:

3/8/19

	Weighing #1	Weighing #2	Weighing #3	Weighing #4
	Date/Time: 3/11/19	Date: 3/13/19	Date:	Date:
	R/H %: 12.5	R/H %: 11.8	R/H %:	R/H %:
	Temp (F): 71.9	Temp (F): 71.4	Temp (F):	Temp (F):
	Audit 1: 200.0	Audit 1: 200.0	Audit 1:	Audit 1:
	Audit 2: 2000.2	Audit 2: 2000.3	Audit 2:	Audit 2:
	Audit 3: 99997.7	Audit 3: 99997.8	Audit 3:	Audit 3:
	Initials:	Initials:	Initials:	Initials:

Train	Item	ID #	Tare (mg)	Weight (mg)	Weight (mg)	Weight (mg)	Weight (mg)
A	Filter (60 min)	T139S	90.4	91.2	91.2		
A	Front Filter (Remainder)	T129AP	183.0	184.9 ~~184.8~~	184.9		
A	Probe	34	115868.1	115868.2	115868.1		
A	O-Ring Set	R746	3356.3	3356.4	3356.4		
B	Filter	T129BP	182.0	184.8	184.9		
B	Probe	35	114325.9	114325.8	114325.9		
B	O-Ring Set	R747	3306.7	3306.6	3306.7		
Amb	Filter	D666	120.8	120.8	120.9		

Technician Signature: Date: 3/13/19

OMNI-Test Laboratories, Inc.

ASTM E2780 Wood Heater Run Sheets

Client: Kuma Project Number: 0123WM011E Run Number: 6 Med

Model: Aspen LE Tracking Number: 2357 Date: 3/6/2019

Test Crew: Aaron Kravitz

OMNI Equipment ID numbers: 132, 283A, 371, 372, 410, 420, 559, 592, 650, 637

ASTM E2515 Lab Sheet

Assembled By:

A. Kravitz

Date/Time in Desiccator:

3/8/19

	Weighing #1	Weighing #2	Weighing #3	Weighing #4
	Date/Time: 3/11/19	Date: 3/13/19	Date:	Date:
	R/H %: 12.5	R/H %: 11.6	R/H %:	R/H %:
	Temp (F): 71.4	Temp (F): 71.4	Temp (F):	Temp (F):
	Audit 1: 200.0	Audit 1: 200.0	Audit 1:	Audit 1:
	Audit 2: 2000.2	Audit 2: 2000.3	Audit 2:	Audit 2:
	Audit 3: 99997.7	Audit 3: 99997.8	Audit 3:	Audit 3:
	Initials: AK	Initials: A	Initials:	Initials:

Train	Item	ID #	Tare (mg)	Weight (mg)	Weight (mg)	Weight (mg)	Weight (mg)
A	Filter (60 min)	T140S	89.1	90.3	90.3		
A	Front Filter (Remainder)	T130AP	181.9	182.9	182.9		
A	Probe	14	114548.3	114548.2	114548.4		
A	O-Ring Set	R751	3313.4	3313.6	3313.7		
B	Filter	T130BP	178.1	180.6	180.6		
B	Probe	20	114253.0	114253.0	114253.0		
B	O-Ring Set	R752	3532.4	3532.5	3532.7		
Amb	Filter	D691	120.8	120.8	120.8		

Technician Signature: Aaron Kravitz Date: 3/13/19

Tare Sheet: (check one) **Probes**_____ **47mm Filters**_✓_ **100mm Filters**_____ **O-Ring Pair**_____

Prepared By: BDAUS Balance ID #: OMNI-00637 Thermohygrometer ID #: OMNI-00592 Audit Weight ID #/Mass: OMNI-002834 / 200 mg

Placed in Dessicator: Date: 8/31/18 Time: 0925 ID #	Date: 9/4/18 Time: 0838 RH %: 12.8 T (°F): 77.4 Audit: 200.0	Date: 9/5/18 Time: 0832 RH %: 12.7 T (°F): 76.4 Audit: 200.1	Date: Time: RH %: T (°F): Audit:	Date: Time: RH %: T (°F): Audit:	Date Used	Project Number	Run No.
T53AP	185.3	185.5			2/26/19	0123WM011E	1
T53BP	186.2	186.2			↓	↓	↓
	Initials: DR	Initials: BR	Initials:	Initials:			

Final Technician Signature: _____ Date: 10/22/18

Evaluator signature: _____ 10/22/18

Tare Sheet: Probes___ 47mm Filters__✓ 100mm Filters___ O-Ring Pair___

Date/time Placed in Dessicator: 1/30/19 0800

Thermohygrometer ID #: Omni-00592

Prepared By: B Davis

Analytical Balance ID #: Omni-00637

Audit Weight ID #/Mass: Omni-00283A / 200mg

ID #	Date: 1/31/19 Time: 0820 RH %: 13.7 T (°F): 70.3 Audit: 200.1	Date: 2/1/19 Time: 0823 RH %: 11.0 T (°F): 71.6 Audit: 200.1	Date: Time: RH %: T (°F): Audit:	Date: Time: RH %: T (°F): Audit:	Date Used	Project Number	Run No.
T124S	88.7	88.7			2/26/19	0123WM011E	1
	Initials: BD	Initials: BD	Initials:	Initials:			

Final Technician Signature: [signature] Date: 2/4/19

Evaluator signature: [signature]

Tare Sheet: Probes___ 47mm Filters✓ 100mm Filters___ O-Ring Pair___

Date/time Placed in Dessicator: 2/1/19 0910

Prepared By: B Davis

Analytical Balance ID #: omni-00637

Thermohygrometer ID #: OMNI-0592

Audit Weight ID #/Mass: OMNI-00283A / 200 mg

ID #	Date: 2/8/19 Time: 8:20 RH %: T (°F): 69.4 Audit: 200.0 mg	Date: 2/11/19 Time: 0830 RH %: 14.2 T (°F): 70.6 Audit: 200.0	Date: Time: RH %: T (°F): Audit:	Date: Time: RH %: T (°F): Audit:	Date Used	Project Number	Run No.
T127AP	167.7	167.6	✓		2/26/19	0123WM011E	2
T127BP	180.3	180.3	✓		2/28/19		4
T128AP	181.2	181.2	✓		3/4/19		5
T128BP	181.1	181.2	✓		3/6/19		6
T129AP	183.0	182.9	✓				
T129BP	182.0	181.9	✓				
T130AP	181.7	181.9	✓				
T130BP	178.2	178.1	✓				
T131S	88.0	88.0	✓		2/26/19	0123WM011E	1
T132S	87.7	87.9	✓		2/28/19		4
T133S	87.3	87.2	✓				
T134S	87.6	87.6	✓				
T135S	90.9	91.1	✓				
T136S	90.1	90.3	✓				
T137S	91.0	90.9	✓				
T138S	90.6	90.5	✓				
T139S	90.2	90.4	✓		3/4/19		5
T140S	89.0	89.1	✓		3/6/19		6
	Initials:	Initials: BD	Initials:	Initials:			

Final Technician Signature: _____ Date: 2/11/19

Control No. P-SFDP-0001.xls, Effective date: 9/9/2015

Evaluator signature: _____ 4/1/19

Tare Sheet: (check one) **Probes**_____ **47mm Filters** ✓ **100mm Filters**_____ **O-Ring Pair**_____

Prepared By: B Davis Balance ID #: OMNI-00637 Thermohygrometer ID #: OMNI-00592 Audit Weight ID #/Mass: 00283A / 200 mg

Placed in Dessicator: Date: 1/16/19 Time: 0850	Date: 1/17/19 Time: 1215 RH %: 11.9 T (°F): 71.7 Audit: 199.9	Date: 1/18/19 Time: 0811 RH %: 10.8 T (°F): 70.1 Audit: 200.0	Date: Time: RH %: T (°F): Audit:	Date: Time: RH %: T (°F): Audit:	Date Used	Project Number	Run No.
ID #							
D663	120.4	120.6			2/26/19	0123WM011E	1
D664	121.5	121.5			↓	↓	2
D665	120.2	120.1			2/28/19	↓	4
D666	121.0	120.8					
D667	120.8	120.7					
	Initials: BR	Initials: BR	Initials:	Initials:			

Final Technician Signature: BD Date: 2/23/19 Evaluator signature: K. J. Mong

Control No. P-SFDP-0002.xls, Effective date: 2/1/2017

Tare Sheet: (check one) **Probes** ✓ **47mm Filters**____ **100mm Filters**____ **O-Ring Pair**____

Prepared By: B Davis Balance ID #: omni-00637 Thermohygrometer ID #: omni-00592 Audit Weight ID #/Mass: omni-00283A / 100g

Placed in Dessicator: Date: 1/22/19 Time: 0800 ID #	Date: 1/23/19 Time: 0840 RH %: 18.6 T (°F): 71.7 Audit: 99997.9	Date: 1/24/19 Time: 0910 RH %: 19.7 T (°F): 72.1 Audit: 99997.8	Date: 1/24/19 Time: 1600 RH %: - T (°F): - Audit: -	Date: 1/25/19 Time: 0802 RH %: 17.4 T (°F): 72.2 Audit: 99997.8	Date Used	Project Number	Run No.
14	114548.7	114547.9	114548.3	114548.3	3/6/19	0123WM011E	6
20	114253.2	114253.0	–		↓	↓	↓
21	114391.9	114391.3	114391.3	–	2/24/19	0123WM011E	1
22	114343.7	114343.3	114343.1	–	↓	↓	↓
23	114076.7	114076.1	114075.9	–			2
31	114367.3	114367.0	114366.6	114366.8	–	↓	↓
	Initials: BL	Initials: BL	Initials:	Initials: BL			

Final Technician Signature: _____ Date: 2/20/19 Evaluator signature: _____

Control No. P-SFDP-0002.xls, Effective date: 2/1/2017

Tare Sheet: Probes ✓ **47mm Filters**___ **100mm Filters**___ **O-Ring Pair**___

Date/time Placed in Dessicator: 1/29/19 0915

Prepared By: BDAVIS

Analytical Balance ID #: Omni-00637

Thermohygrometer ID #: Omni-00592

Audit Weight ID #/Mass: Omni-00283A / 100g

ID #	Date: 1/29/19 Time: 0940 RH %: 17.4 T (°F): 71.2 Audit: 99997.9	Date: 1/31/19 Time: 0840 RH %: 17.3 T (°F): 70.3 Audit: 99998.0	Date: 2/1/19 Time: 0830 RH %: 13.1 T (°F): 71.2 Audit: 99998.0	Date: 2/4/19 Time: 0915 RH %: 14.5 T (°F): 71.4 Audit: 99998.0	Date Used	Project Number	Run No.
32	114740.9	114740.8	✓		2/28/19	0123WMOLLE	4
33	113943.1	113942.9	✓		↓	↓	↓
34	115868.1	115868.1	✓		3/4/19	↓	5
35	114325.7	114325.9	✓		↓	↓	↓
	Initials: BDA	Initials: BDA	Initials: BDA	Initials: BDA			

Final Technician Signature: _____ Date: 2/4/19

Control No. P-SFDP-0001.xls, Effective date: 9/9/2015

Evaluator signature: _____

Tare Sheet: (check one) **Probes**_____ **47mm Filters**_____ **100mm Filters**_____ **O-Ring Pair** ✓

Prepared By: B Davis Balance ID #: Omni-00637 Thermohygrometer ID #: Omni-00592 Audit Weight ID #/Mass: Omni-00283A / 2g

Placed in Dessicator: Date: 1/22/19 Time: 0910	Date: 1/23/19 Time: 10:00 RH %: 18.0 T (°F): 73.9 Audit: 2000.2	Date: 1/24/19 Time: 11:30 RH %: 16.4 T (°F): 73.4 Audit: 2000.2	Date: 1/25/19 Time: 0815 RH %: 14.4 T (°F): 71.6 Audit: 2000.2	Date: 1/28/19 Time: 1030 RH %: 7.9 T (°F): 71.7 Audit: 2000.3	Date Used	Project Number	Run No.
ID #							
R727	3305.7	3303.9	3304.3	3304.1	2/26/19	0123WM011E	1
R728	3579.9	3578.8	3578.8	✓	2/26/19	0123WM011E	1
R729	3404.2	3402.8	3402.4	3402.2	2/26/19	↓	2 ↓
R730	3326.4	3325.4	3325.1	3324.9	2/26/19	↓	↓
R731	3310.1	3309.0	3308.8	✓	2/28/19	↓	4
R732	3263.6	3262.7	3262.7	✓	↓	↓	↓
~~R733~~	-	-					
~~R734~~	-	-					
~~R735~~	-	-					
~~R736~~	-	-					
~~R737~~	-	-					
~~R738~~	-	-					
	Initials: [signature]	Initials: [signature]	Initials: [signature]	Initials: [signature]			

Final Technician Signature: [signature] Date: 1/28/19 Evaluator signature: [signature]

Control No. P-SFDP-0002.xls, Effective date: 2/1/2017

Tare Sheet: (check one) **Probes**_____ **47mm Filters**_____ **100mm Filters**_____ **O-Ring Pair**_____

Prepared By: B DAVIS Balance ID #: OMNI-00637 Thermohygrometer ID #: OMNI-00592 Audit Weight ID #/Mass: OMNI-002824 / 5g

Placed in Dessicator: Date: 1/29/19 Time: 0910 ID #	Date: 1/30/19 Time: 0930 RH %: 18.4 T (°F): 71.4 Audit: 5000.0	Date: 1/31/19 Time: 0850 RH %: 12.2 T (°F): 71.3 Audit: 5000.0	Date: 2/1/19 Time: 0846 RH %: 12.2 T (°F): 71.1 Audit: 5000.0	Date: Time: RH %: T (°F): Audit:	Date Used	Project Number	Run No.
R746	3556.5	3556.3			3/4/19	0123WMOLE	5
R747	3306.8	3306.7			↓	↓	↓
	Initials: BR	Initials: BR	Initials: BR	Initials:			

Final Technician Signature: _____ Date: 2/1/19 Evaluator signature: _____

Tare Sheet (Check one) Probes_____ 47mm Filters__ 100mm Filters_____ O-Ring Pair ✓

Date/time Placed in Dessicator: Feb 2019

Thermohygrometer ID #: 592

Prepared By: A. Kravitz

Analytical Balance ID #: C37

Audit Weight ID #/Mass: 2831 / 2g

ID #	Date: 3/1/19 Time: 1600 RH %: 16.2 T (°F): 71.4 Audit: 20000.0	Date: 3/2/19 Time: 1000 RH %: 12.4 T (°F): 65.4 Audit: 20000.3	Date: Time: RH %: T (°F): Audit:	Date: Time: RH %: T (°F): Audit:	Date Used	Project Number	Run No.
R751	3313.6	3313.4	-		3/6/19	012VMOLLE	6
R752	3532.3	3532.4	-		↓	↓	↓

Section 3
Laboratory Quality Assurance

3.1 - Quality Assurance/Quality Control
3.2 - Calibration Data
3.3 - Example Calculations

3.1 - Quality Assurance/Quality Control

OMNI follows the guidelines of ISO/IEC 17025, "General Requirements for the Competence of Testing and Calibration Laboratories," and the quality assurance/quality control (QA/QC) procedures found in *OMNI*'s Quality Assurance Manual.

OMNI's scope of accreditation includes, but is not limited to, the following:

- ANSI (American National Standards Institute) for certification of product to safety standards.
- To perform product safety testing by the International Accreditation Service, Inc. (formerly ICBO ES) under accreditation as a testing laboratory designated TL-130.
- To perform product safety testing as a "Certification Organization" by the Standards Council of Canada (SCC).
- Serving as a testing laboratory for the certification of wood heaters by the U.S. Environmental Protection Agency.

This report is issued within the scope of *OMNI*'s accreditation. Accreditation certificates are available upon request.

The manufacturing facilities and quality control system for the production of the K-180 Series at Kuma Stoves, Inc. were evaluated to determine if sufficient to maintain conformance with OMNI's requirements for product certification. OMNI has concluded that the manufacturing facilities, processes, and quality control system are adequate to produce the appliance congruous with the standards and model codes to which it was evaluated.

This report shall not be reproduced, except in full, without the written approval of OMNI-Test Laboratories, Inc.

3.2 - Calibration Data

Equipment for ASTM E2515, ASTM E2779, & EPA Method 28R

ID #	Lab Name/Purpose	Log Name	Attachment Type
132	10 lb Weight	Weight Standard, 10 lb.	Calibration Log
185	1000lb Scale	Weight Indicator, Model WI-127	Calibration Certificate
283A	Audit Weight Set	Troemer weight set	Calibration Certificate
371	Sample Box / Dry Gas Meter	Apex Automated Emissions Sampling Box	Calibration Log
372	Sample Box / Dry Gas Meter	Apex Automated Emissions Sampling Box	Calibration Log
410	Microtector	Dwyer Microtector	Calibration Certificate
559	Vaneometer	Dwyer Vaneometer	Equipment Record
592	Thermohygrometer	Omega Digital Thermohygrometer	Calibration Log
419	Combustion Gas Analyzer	CAI Gas Analyzer	See Run Sheet
637	Milligram Balance	Analytical Balance - Mettler - Toledo	Calibration Certificate
650	Barometer/Hygrometer	Digital Barometer	Calibration Certificate

SCALE WEIGHT CALIBRATION DATA SHEET

Weight to be calibrated: 10 pounds

ID Number: OMNI-00132

Standard Calibration Weight: 10 pounds

ID Number: OMNI-00255

Scale Used: MTW-150K

ID Number: OMNI-00353

Date: 2/23/2018 By: B. Davis

Standard Weight (A) (Lb.)	Weight Verified (B) (Lb.)	Difference (A - B)	% Error
10.0	10.0	0.0	0

*Acceptable tolerance is 1%.

This calibration is traceable to NIST using calibrated standard weights.

Technician signature: [signature] Date: 2/23/18

Becherini Scale Center, Inc.
317 E. Sprague
Spokane, WA 99202

SCALE CALIBRATION RECORD

Customer: MYREIN | Date: 9/1/17

Work Order Number: 49320 | PO Number:

Equipment Mfg.	Serial Number	Specifications	Weight used	Initial Readings	Final Readings
1. PANTHER	4466459	1000 x .1	0		
	Pass...Fail		50		
			100		
			300		
			500		
			0		

Notes:
DOA
will be new Scale deck

Equipment Mfg.	Serial Number	Specifications	Weight used	Initial Readings	Final Readings
2. PANTHER	00155556CH	5K x 1	0		
	Pass...Fail		50		
			100		
			300		
			500		
			0		

Notes:
DNF
SPARE Readout

Equipment Mfg.	Serial Number	Specifications	Weight used	Initial Readings	Final Readings
3. PANTHER	00025736AJ	1000 x .1	0	0	0
	Pass...Fail		50	50	50
			100	99.9	100
			300	299.6	300
			500	498.8	500
			0	0	0

Notes: SCALE CALIBRATED w/CERT. WEIGHTS.
SOUTH Scale ✓

Equipment Mfg.	Serial Number	Specifications	Weight used	Initial Readings	Final Readings
4. PANTHER	00926516KL	1000 x .1	0	0	
	Pass...Fail		50	50	
			100	100	
			300	300	
			500	500	
			0	0	

Notes: SCALE CALIBRATED (GOOD)
Center Scale

Additional Comments:

Last Checked: 11/16 | Next Check Due: —

Weights Certified: 10/16 | Technician: BB

Calibration checked IAW NIST handbook 44

Becherini Scale Center, Inc.
317 E. Sprague
Spokane, WA 99202

SCALE CALIBRATION RECORD

Customer: MYREN | Date: 9/1/17

Work Order Number: 49320 | PO Number:

Equipment Mfg.	Serial Number	Specifications	Weight used	Initial Readings	Final Readings
1. SARTORIUS	25359106	15K x .5	0	0	0
CTSL1-4	Pass...Fail		50	50	50
Notes: STRAIN TEST w/ ~~4026~~ 3926 lbs			500	499	500
CALIBRATED w/ 3926 lbs			1000	998	1000
SCALE CHECKS GOOD			~~2000~~ 3926	~~3998~~	3926
			0	0	0

Equipment Mfg.	Serial Number	Specifications	Weight used	Initial Readings	Final Readings
2. OHAUS	2350003	24 x .002	0	0	0
RANGER	Pass...Fail		.5	.5	.5
Notes: LEVELED SCALE, SCALE			4	4	4
CHECKS GOOD.			20	20.002	20
			24	24.002	24
			0	0	0

Equipment Mfg.	Serial Number	Specifications	Weight used	Initial Readings	Final Readings
3.					
	Pass...Fail				
Notes:					

Equipment Mfg.	Serial Number	Specifications	Weight used	Initial Readings	Final Readings
4.					
	Pass...Fail				
Notes:					

Additional Comments:

Last Checked: 11/16 | Next Check Due: —

Weights Certified: 10/16 | Technician: BB

Calibration checked IAW NIST handbook 44

Calibration complies with ISO/IEC 17025, ANSI/NCSL Z540-1, and 9001

ACCREDITED
A2LA Certificate No. 1750.01
Calibration

Cert. No.: 6530-9263396

Traceable® Certificate of Calibration for Digital Barometer

Manufactured for and distributed by : Control Company "Drawer 58307,Houston,TX,77258,USA"

Instrument Identification:

Model: 6530, S/N: 181062211 Manufacturer: Control Company

Standards/Equipment:

Description	Serial Number	Due Date	NIST Traceable Reference
Digital Barometer	D4540001	09 Oct 2018	1000415948
Digital Thermometer	130070752	02 Mar 2018	4000-8360837
Chilled Mirror Hygrometer	44654/2H3737	02 Nov 2019	15478
Climate Chamber	W613.0046		

Certificate Information:

Technician: 57 Procedure: CAL-31 Cal Date: 26 Feb 2018 Cal Due Date: 26 Feb 2020

Test Conditions: 54.9%RH 22.83°C 1023mBar

Calibration Data: (New Instrument)

Unit(s)	Nominal	As Found	In Tol	Nominal	As Left	In Tol	Min	Max	±U	TUR
%RH	N.A.	N.A.		51.21	52	Y	49	55	0.74	>4:1
°C	N.A.	N.A.		24.55	24.3	Y	24.15	24.96	0.051	>4:1
mb/hPa	N.A.	N.A.		1010.30	1010	Y	1007	1015	0.62	>4:1
mb/hPa	N.A.	N.A.		806.75	806	Y	803	811	0.62	>4:1
mb/hPa	N.A.	N.A.		908.50	908	Y	905	913	0.62	>4:1

This certificate indicates Traceability to standards provided by (NIST) National Institute of Standards and Technology and/or a National Standards Laboratory.

A Test Uncertainty Ratio of at least 4:1 is maintained unless otherwise stated and is calculated using the expanded measurement uncertainty. Uncertainty evaluation includes the instrument under test and is calculated in accordance with the ISO "Guide to the Expression of Uncertainty in Measurement : (GUM). The uncertainty represents an expanded uncertainty using a coverage factor k=2 to approximate a 95% confidence level. In tolerance conditions are based on test results falling within specified limits with no reduction by the uncertainty of the measurement. The results contained herein relate only to the item calibrated. This certificate shall not be reproduced except in full, without written approval of Control Company.

Nominal=Standard's Reading; As Left=Instrument's Reading; In Tol=In Tolerance; Min/Max=Acceptance Range; ± U=Expanded Measurement Uncertainty; TUR=Test Uncertainty Ratio; Accuracy=±(Max-Min)/2; Min=As Left Nominal(Rounded) – Tolerance; Max= As Left Nominal(Rounded) + Tolerance;

Nicol Rodriguez, Quality Manager

Aaron Judice, Technical Manager

Maintaining Accuracy:

In our opinion once calibrated your Digital Barometer should maintain its accuracy. There is no exact way to determine how long calibration will be maintained. Digital Barometer change little, if any at all, but can be affected by aging, temperature, shock, and contamination.

Recalibration:

For factory calibration and re-certification traceable to National Institute of Standards and Technology contact Control Company.

CONTROL COMPANY 12554 Galveston RD Suite B230 Webster TX USA 77598
Phone 281 482-1714 Fax 281 482-9448 sales@control3.com www.control3.com

Control Company is an ISO/IEC 17025:2005 Calibration Laboratory Accredited by (A2LA) American Association for Laboratory Accreditation, Certificate No. 1750.01.
Control Company is ISO 9001:2008 Quality Certified by DNV GL, Certificate No. CERT-01805-2006-AQ-HOU-RvA.
International Laboratory Accreditation Cooperation (ILAC) - Multilateral Recognition Arrangement (MRA).

Traceable® is a registered trademark of Control Company

© 2017 Control Company

Certificate of Calibration

Certificate Number: **685888**

JJ Calibrations, Inc.
7007 SE Lake Rd
Portland, OR 97267-2105
Phone 503.786.3005
FAX 503.786.2994

Omni-Test Laboratories
13327 NE Airport Way
Portland, OR 97230

0723.01
Calibration

PO: **180188**
Order Date: 10/09/2018
Authorized By: **N/A**

Property #: OMNI-00283A
User: N/A
Department: N/A
Make: Troemner Inc
Model: 1mg-100g (Class F)
Serial #: 47883
Description: Mass Set, 21pc
Procedure: DCN 500901
Accuracy: Class F

Calibrated on: 10/26/2018
*Recommended Due: 10/26/2023
Environment: **20** °C **57** % RH
* As Received: Within Tolerance
* As Returned: Within Tolerance
Action Taken: Calibrated
Technician: **139**

Remarks: * Many factors may cause the unit to drift out of calibration before the recommended due date. Any reported error is the absolute value between the reference and the unit. Uncertainties include the effects of the unit.

This set meets Class F specifications.
Received and returned eight (8) masses in a black case secured by a rubber band.

Standards Used

Std ID	Manufacturer	Model	Nomenclature	Due Date	Trace ID
723A	Rice Lake	1mg-200g (Class 0)	Mass Set,	03/23/2019	668240
800A	Sartorius	MSA225W100DI	Analytical Balance	12/11/2018	663857

Measurement Data

Parameter / Measurement Description	Range Unit	Reference	Min	Max	[k]Error	UUT	Uncertainty
Before/After							Accredited = ✓
Mass							
Dot	200 mg	200.00030	199.4603	200.5403	0.0500	200.0503 mg	6.2E-01 ✓
	1 g	1.00000880	0.9991088	1.0009088	0.0000000	1.0000088 g	1E-03 ✓
	2 g	2.00001470	1.9989147	2.0011147	0.0003250	2.0003397 g	1.3E-03 ✓
	5 g	5.00000840	4.9985084	5.0015084	0.0000400	4.9999684 g	1.7E-03 ✓
	10 g	10.0000100	9.998010	10.002010	0.000245	9.999765 g	2.3E-03 ✓
Dot	20 g	20.0000140	19.996014	20.004014	0.000990	20.001004 g	4.6E-03 ✓
	50 g	49.9999660	49.989966	50.009966	0.000595	49.999371 g	1.1E-02 ✓
	100 g	100.000000	99.98000	100.02000	0.00194	99.99806 g	2.3E-02 ✓

JJ Calibrations, Inc. certifies that this instrument has been calibrated in accordance with the JJ Calibrations Quality Assurance Manual with the stated procedure using standards that are traceable to the National Institute of Standards and Technology (NIST), or other National Measurement Institutes (NMI's), or by using natural physical constants, intrinsic standards or ratio calibration techniques. The quality system and this certificate are in compliance with ANSI/NCSL Z540-1-1994, ISO/IEC 17025-2005, ISO 10012-1, the ISO 9000 family and QS 9000. The expanded uncertainties of measurements for this calibration are based upon 95% (2 sigma) confidence limits. Unless otherwise stated, a test accuracy ratio (TAR) of 4:1, if achievable, is maintained. The results reported herein apply only to the calibration of the item described above. This report may not be reproduced, except in full, without prior written consent of JJ Calibrations, Inc.
JJ Calibrations, Inc. quality system has been assessed and accredited to ISO/IEC 17025:2005.

Reviewer

3 Issued 10/29/2018 Rev # 15

Inspector

Thermal Metering System Calibration
Y Factor

Manufacturer:	Apex
Model:	XC-60-EP
Serial Number:	0702003
OMNI Tracking No.:	OMNI-00371
Calibrated Orifice:	☐ Yes

Average Gas Meter y Factor	Orifice Meter dH@
1.009	N/A

Calibration Date:	01/17/19	
Calibrated by:	B. Davis	
Calibration Frequency:	6 months	
Next Calibration Due:	7/17/2019	
Instrument Range:	1.000	cfm
Standard Temp.:	68	oF
Standard Press.:	29.92	"Hg
Barometric Press., Pb:	29.75	"Hg
Signature/Date:		

Previous Calibration Comparision

		Acceptable Deviation (5%)	Deviation
Date	7/16/2018		
y Factor	0.983	0.04915	0.026
Acceptance	Acceptable		

Current Calibration

Acceptable y Deviation	0.020
Maximum y Deviation	0.009
Acceptable dH@ Deviation	N/A
Maximum dH@ Deviation	N/A
Acceptance	Acceptable

Reference Standard *			
Standard Calibrator	Model	Standard Test Meter	
	S/N	OMNI-00001	
	Calib. Date	18-Nov-18	
	Calib. Value	0.9981	y factor (ref)

Calibration Parameters	Run 1	Run 2	Run 3
Reference Meter Pressure ("H2O), Pr	0.00	0.00	0.00
DGM Pressure ("H2O), Pd	3.24	1.70	1.00
Initial Reference Meter	906.2	914.7	921
Final Reference Meter	914.604	920.9	928.303
Initial DGM	0	0	0
Final DGM	8.126	6.112	7.228
Temp. Ref. Meter (°F), Tr	70.9	69.5	70.0
Temperature DGM (°F), Td	68.0	66.0	70.8
Time (min)	26.0		67.5
Net Volume Ref. Meter, Vr	8.404	6.200	7.303
Net Volume DGM, Vd	8.126	6.112	7.228
Gas Meter y Factor =	**1.018**	**1.002**	**1.008**
Gas Meter y Factor Deviation (from avg.)	0.009	0.008	0.002
Orifice dH@	**N/A**	**N/A**	**N/A**
Orifice dH@ Deviation (from avg.)	N/A	N/A	N/A

where:

1. Deviation = |Average value for all runs - current run value|

** 2. $y = [Vr \times (y \text{ factor (ref)}) \times (Pb + (Pr/ 13.6)) \times (Td + 460)] / [Vd \times (Pb + (Pd / 13.6)) \times (Tr + 460)]$

** 3. $dH@ = 0.0317 \times Pd / (Pb\ (Td + 460)) \times [\ (Tr + 460) \times time) / Vr\ ]^2$

* Reference calibration is traceable to NIST through NIST Test # 40674, Kimble ASTM E1272, or NIST traceable laboratory

** Equations come from EPA Method 5

The uncertainty of measurement is ±0.14 ft^3/min. This is based on the reference standard having a TAR (Test Accuracy Ratio) of at least 4:1.

Temperature Calibration
EPA Method 28R, ASTM 2515

Booth:	Temperature Monitor Type:	Equipment Number:
Mobile	National Instruments Logger	00371, 00372

Reference Meter Equipment Number: 00373	Calibration Due Date: 7/21/19

Performed By:	Date:	Ambient Temperature:	Barometric Pressure:
A. Kravitz	1/121/2019	68	30.27

Input (F)	Amb	Meter A	Meter B	Filter A	Filter B	Tunnel	FB Interior
0	-1	-1	-1	-1	-1	-1	-1
100	99	99	99	99	99	99	99
300	299	299	299	300	299	299	299
500	499	499	499	499	499	499	499
700	699	699	699	699	699	699	699
1000	999	999	999	999	999	999	999

Input (F)	FB Top	Bottom	Back	Left	Right	Imp A	Imp B	Cat	Stack
0	0	0	-1	-1	-1	-1	-1	-1	-1
100	99	99	99	99	99	99	100	99	99
300	299	299	299	299	299	299	299	299	299
500	499	499	499	499	499	499	499	499	499
700	699	699	699	699	699	699	699	699	699
1000	999	999	999	999	999	999	999	999	999
1200								1249	
1600								1599	
2000								1999	

Technician signature: _____ Date: 1/21/2019

Reviewed By: _____ Date: 2/25/19

DIFFERENTIAL PRESSURE GAUGE CALIBRATION DATA SHEET

Instrument to be calibrated: 371B

Maximum Range: 1" H_2O ID Number: 371B

Calibration Instrument: Digital Manometer ID Number: 633

Date: 1/21/2019 By: Aaron Kravitz

This form is to be used only in conjunction with Standard Procedure C-SPC.

Range of Calibration Point ("WC)	Digital Manometer Input ("WC)	Pressure Gauge Response ("WC)	Difference (Input - Response)	% Error of Full Span*
0-20% Max. Range	0.12	0.13	0.01	1%
20-40% Max. Range	0.38	0.36	0.02	2%
40-60% Max. Range	0.44	0.45	0.01	1%
60-80% Max. Range	0.61	0.60	0.01	1%
80-100% Max. Range	0.48	0.49	0.01	1%

*Acceptable tolerance is 4%.

The uncertainty of measurement is ±0.4" WC. This is based on the reference standard having a TAR (Test Accuracy Ratio) of at least 4:1.

Technician signature: _____ Date: 1/21/19

Reviewed by: _____ Date: 2/25/19

Thermal Metering System Calibration
Y Factor

Manufacturer:	Apex
Model:	XC-60-EP
Serial Number:	0702004
OMNI Tracking No.:	OMNI-00372
Calibrated Orifice:	☐ Yes

Average Gas Meter y Factor	Orifice Meter dH@
0.996	N/A

Calibration Date:	01/17/19	
Calibrated by:	B. Davis	
Calibration Frequency:	6 months	
Next Calibration Due:	7/17/2019	
Instrument Range:	1.000	cfm
Standard Temp.:	68	oF
Standard Press.:	29.92	"Hg
Barometric Press., Pb:	30.24	"Hg
Signature/Date:		

Previous Calibration Comparision

		Acceptable Deviation (5%)	Deviation
Date	7/16/2018		
y Factor	0.993	0.04965	0.003
Acceptance	Acceptable		

Current Calibration

Acceptable y Deviation	0.020
Maximum y Deviation	0.014
Acceptable dH@ Deviation	N/A
Maximum dH@ Deviation	N/A
Acceptance	Acceptable

Reference Standard *			
Standard Calibrator	Model	Standard Test Meter	
	S/N	OMNI-00001	
	Calib. Date	14-Nov-18	
	Calib. Value	0.9981	y factor (ref)

Calibration Parameters	Run 1	Run 2	Run 3
Reference Meter Pressure ("H2O), Pr	0.00	0.00	0.00
DGM Pressure ("H2O), Pd	2.00	1.30	0.80
Initial Reference Meter	963.421	968.575	973.96
Final Reference Meter	968.575	973.968	979.252
Initial DGM	0	0	0
Final DGM	5.164	5.336	5.384
Temp. Ref. Meter (°F), Tr	65.3	65.5	66.5
Temperature DGM (°F), Td	67.0	68.0	69.0
Time (min)	27.8	36.5	48.3
Net Volume Ref. Meter, Vr	5.154	5.393	5.292
Net Volume DGM, Vd	5.164	5.336	5.384
Gas Meter y Factor =	**0.995**	**1.010**	**0.984**
Gas Meter y Factor Deviation (from avg.)	0.002	0.014	0.012
Orifice dH@	**N/A**	**N/A**	**N/A**
Orifice dH@ Deviation (from avg.)	N/A	N/A	N/A

where:

1. Deviation = |Average value for all runs - current run value|

** 2. y = [Vr x (y factor (ref)) x (Pb + (Pr/ 13.6)) x (Td + 460)]/ [Vd x (Pb + (Pd / 13.6)) x (Tr + 460)]

** 3. dH@ = 0.0317 x Pd / (Pb (Td + 460)) x [(Tr + 460) x time) / Vr]^2

* Reference calibration is traceable to NIST through NIST Test # 40674, Kimble ASTM E1272, or NIST traceable laboratory

** Equations come from EPA Method 5

The uncertainty of measurement is ±0.14 ft^3/min. This is based on the reference standard having a TAR (Test Accuracy Ratio) of at least 4:1.

Temperature Calibration
EPA Method 28R, ASTM 2515

Booth:	Temperature Monitor Type:	Equipment Number:
Mobile	National Instruments Logger	00371, 00372

Reference Meter Equipment Number: 00373	Calibration Due Date: 7/21/19

Performed By:	Date:	Ambient Temperature:	Barometric Pressure:
A. Kravitz	1/121/2019	68	30.27

Input (F)	Amb	Meter A	Meter B	Filter A	Filter B	Tunnel	FB Interior
0	-1	-1	-1	-1	-1	-1	-1
100	99	99	99	99	99	99	99
300	299	299	299	300	299	299	299
500	499	499	499	499	499	499	499
700	699	699	699	699	699	699	699
1000	999	999	999	999	999	999	999

Input (F)	FB Top	Bottom	Back	Left	Right	Imp A	Imp B	Cat	Stack
0	0	0	-1	-1	-1	-1	-1	-1	-1
100	99	99	99	99	99	99	100	99	99
300	299	299	299	299	299	299	299	299	299
500	499	499	499	499	499	499	499	499	499
700	699	699	699	699	699	699	699	699	699
1000	999	999	999	999	999	999	999	999	999

1200 ——— 1249
1600 ——— 1599
2000 ——— 1999

Technician signature: _____ Date: 1/21/2019

Reviewed By: _____ Date: 2/25/19

DIFFERENTIAL PRESSURE GAUGE CALIBRATION DATA SHEET

Instrument to be calibrated: 372B

Maximum Range: 1" H_2O ID Number: 372B

Calibration Instrument: Digital Manometer ID Number: 633

Date: 1/21/2019 By: Aaron Kravitz

This form is to be used only in conjunction with Standard Procedure C-SPC.

Range of Calibration Point ("WC)	Digital Manometer Input ("WC)	Pressure Gauge Response ("WC)	Difference (Input - Response)	% Error of Full Span*
0-20% Max. Range	0.14	0.15	0.01	1%
20-40% Max. Range	0.37	0.38	0.01	1%
40-60% Max. Range	0.54	0.56	0.02	2%
60-80% Max. Range	0.62	0.63	0.01	1%
80-100% Max. Range	0.94	0.96	0.02	2%

*Acceptable tolerance is 4%.

The uncertainty of measurement is ±0.4" WC. This is based on the reference standard having a TAR (Test Accuracy Ratio) of at least 4:1.

Technician signature: _____ Date: 1/21/19

Reviewed by: _____ Date: 2/25/19

Certificate of Calibration

Certificate Number: **686722**

JJ Calibrations, Inc.
7007 SE Lake Rd
Portland, OR 97267-2105
Phone 503.786.3005
FAX 503.786.2994

Omni-Test Laboratories
13327 NE Airport Way
Portland, OR 97230

ACCREDITED
0723.01
Calibration

PO: **180192**
Order Date: 10/22/2018
Authorized By: **N/A**

Property #: OMNI-00410
User: N/A
Department: N/A
Make: Dwyer
Model: 1430
Serial #: OMNI-00410
Description: Microtector
Procedure: DCN 500908
Accuracy: ±0.00025" WC

Calibrated on: 10/30/2018
*Recommended Due: 10/30/2019
Environment: 22 °C 44 % RH
* As Received: Limited
* As Returned: Limited
Action Taken: Calibrated
Technician: **111**

Remarks: * Many factors may cause the unit to drift out of calibration before the recommended due date. Any reported error is the absolute value between the reference and the unit. Uncertainties include the effects of the unit.

Previous limitation of micrometer head calibrated only continued. .001" reading micrometer head ±.001" (LSD) tolerance applied.

Standards Used

Std ID	Manufacturer	Model	Nomenclature	Due Date	Trace ID
541A	Select	E8FED2	Gage Block Set, 8pc	12/18/2018	663864

Measurement Data

Parameter / Measurement Description	Range Unit	Reference	Min	Max	*Error	UUT	Uncertainty Accredited = ✓
Before/After							
Length							
	Inch	0.1300	0.129	0.131	0.001	0.129 Inch	1.1E-03 ✓
	Inch	0.3850	0.384	0.386	0.001	0.384 Inch	1.1E-03 ✓
	Inch	0.6150	0.614	0.616	0.001	0.614 Inch	1.1E-03 ✓
	Inch	0.8700	0.869	0.871	0.001	0.869 Inch	1.1E-03 ✓
	Inch	1.0000	0.999	1.001	0.001	0.999 Inch	1.1E-03 ✓

JJ Calibrations, Inc. certifies that this instrument has been calibrated in accordance with the JJ Calibrations Quality Assurance Manual with the stated procedure using standards that are traceable to the National Institute of Standards and Technology (NIST), or other National Measurement Institutes (NMI's), or by using natural physical constants, intrinsic standards or ratio calibration techniques. The quality system and this certificate are in compliance with ANSI/NCSL Z540-1-1994, ISO/IEC 17025-2005, ISO 10012-1, the ISO 9000 family and QS 9000. The expanded uncertainties of measurements for this calibration are based upon 95% (2 sigma) confidence limits. Unless otherwise stated, a test accuracy ratio (TAR) of 4:1, if achievable, is maintained. The results reported herein apply only to the calibration of the item described above. This report may not be reproduced, except in full, without prior written consent of JJ Calibrations, Inc.
JJ Calibrations, Inc. quality system has been assessed and accredited to ISO/IEC 17025:2005.

Reviewer

3 Issued 10/31/2018 Rev # 15

Inspector

Calibration Record

Vaneometer Air Velocity Meter OMNI-00559

Calibration Service Record			
Date	**By**	**Results**	**Date of next Calibration**
11/17/17	BR	Installed New Vane From Manufacturer	5/17/18
7/12/18	BR	Installed New Vane from Manufacturer	1/12/19
6/13/19	BR	Installed New Vane From Manufacture	6/15/19

VWR Temperature Hygrometer Calibration Procedure and Data Sheet

Frequency: Every Two Years

Step 1: Locate NIST traceable standard.

Step 2: Place unit to be calibrated, tracking No. OMNI-00592, inside OMNI desiccate box on the same shelf with the NIST traceable standard.

Step 3: After a period of not less than four hours record the temperature and humidity of both units in the spaces provide below.

Step 4: If the unit to be calibrated matches the NIST standard within ± 4%, it is acceptable. If not, the unit needs to be sent to a repair company or replaced.

Verification Data:

Date: ~~1/29/19~~ 1/29/19 pa Technician: BDavis

Time in desiccate: 0840 Recording time: 1415

NIST Standard Temperature: 70.2 °F NIST Standard Humidity: 14.6

Test Unit Temperature Reading: 69.9 °F Test Unit Humidity Reading: 12.1

Test unit OMNI- 00592 is X or was not __ within acceptable limits.

Technician Signature: [signature]

Comments: A difference of 2.5% was found, with a full scale of 90% on the Instrument this gives a 2.77% deviation.

ZRE NDIR/O_2



USER'S MANUAL

1312 West Grove Avenue
Orange, CA 92865-4134
Phone: 714-974-5560 Fax: 714-921-2531
www.gasanalyzers.com

Certificate of Calibration

Certificate Number: **692254**

JJ Calibrations, Inc.
7007 SE Lake Rd
Portland, OR 97267-2105
Phone 503.786.3005
FAX 503.786.2994

OnSite

0723.01
Calibration

Omni-Test Laboratories
13327 NE Airport Way
Portland, OR 97230

PO: **181203**
Order Date: **01/11/2019**
Authorized By: **N/A**

Property #: **OMNI-00637**
User: **N/A**
Department: **N/A**
Make: **Mettler Toledo**
Model: **MS104TS/00**
Serial #: **B729400181**
Description: **Analytical Scale, 120g**
Procedure: **DCN 500887**
Accuracy: **±0.0005g**

Calibrated on: **01/11/2019**
*Recommended Due: **07/11/2019**
Environment: **19** °C **43** % RH
* As Received: **Within Tolerance**
* As Returned: **Within Tolerance**
Action Taken: **Calibrated**
Technician: **123**

Remarks: * Many factors may cause the unit to drift out of calibration before the recommended due date. Any reported error is the absolute value between the reference and the unit. Uncertainties include the effects of the unit.

Standards Used

Std ID	Manufacturer	Model	Nomenclature	Due Date	Trace ID
256A	Rice Lake	W0133K	Mass Set,	05/30/2019	660578

Measurement Data

Parameter / Measurement Description	Range	Unit	Reference	Min	Max	*Error	UUT	Uncertainty
Before/After								Accredited = ü
Force								
		g	10.00000	9.9995	10.0005	0.0000	10.0000 g	5.7E-04 ü
		g	30.00000	29.9995	30.0005	0.0000	30.0000 g	5.7E-04 ü
		g	60.00000	59.9995	60.0005	0.0002	59.9998 g	5.7E-04 ü
		g	90.00000	89.9995	90.0005	0.0001	89.9999 g	5.7E-04 ü
		g	120.00000	119.9995	120.0005	0.0002	119.9998 g	5.7E-04 ü

JJ Calibrations, Inc. certifies that this instrument has been calibrated in accordance with the JJ Calibrations Quality Assurance Manual with the stated procedure using standards that are traceable to the National Institute of Standards and Technology (NIST), or other National Measurement Institutes (NMI's), or by using natural physical constants, intrinsic standards or ratio calibration techniques. The quality system and this certificate are in compliance with ANSI/NCSL Z540-1-1994, ISO/IEC 17025-2005, ISO 10012-1, the ISO 9000 family and QS 9000. The expanded uncertainties of measurements for this calibration are based upon 95% (2 sigma) confidence limits. Unless otherwise stated, a test accuracy ratio (TAR) of 4:1, if achievable, is maintained. The results reported herein apply only to the calibration of the item described above. This report may not be reproduced, except in full, without prior written consent of JJ Calibrations, Inc.
JJ Calibrations, Inc. quality system has been assessed and accredited to ISO/IEC 17025:2005.

Reviewer

3 Issued 01/14/2019 Rev # 15

Inspector

3.3 - Example Calculations

Equations and Sample Calculations – ASTM E3053 & E2515

Manufacturer:	Kuma
Model:	Aspen LE
Run:	5
Category:	Med

Equations used to calculate the parameters listed below are described in this appendix. Sample calculations are provided for each equation. The raw data and printout results from a sample run are also provided for comparison to the sample calculations.

M_{Bdb} – Weight of test fuel burned during test run, dry basis, kg

M_{BSidb} – Weight of test fuel burned during test run segment *i* , dry basis, kg

BR – Average dry burn rate over full integrated test run, kg/hr

BR_{Si} – Average dry burn rate over test run segment *i* , kg/hr

V_s – Average gas velocity in the dilution tunnel, ft/sec

Q_{sd} – Average gas flow rate in dilution tunnel, dscf/hr

$V_{m(std)}$ – Volume of Gas Sampled Corrected to Dry Standard Conditions, dscf

m_n – Total Particulate Matter Collected, mg

C_s - Concentration of particulate matter in tunnel gas, dry basis, corrected to standard conditions, g/dscf

E_T – Total Particulate Emissions, g

PR - Proportional Rate Variation

PM_R – Average particulate emissions for full integrated test run, g/hr

PM_F – Average particulate emission factor for full integrated test run, g/dry kg of fuel burned

Equations and Sample Calculations – ASTM E3053 & E2515

V_s – Average gas velocity in the dilution tunnel, ft/sec

ASTM E2515 equations (9)

$$V_s = F_p \times K_p \times C_P \times \left(\sqrt{\Delta P}\right)_{avg} \times \sqrt{\frac{T_s}{P_s \times M_s}}$$

Where:

F_p = Adjustment factor for pitot tube placement, $Fp = \frac{V_{strav}}{V_{scent}}$, ASTM E2515 Equation (1)

V_{scent} = Dilution tunnel velocity calculated after the multi-point pitot traverse at the center, ft/sec

V_{strav} = Dilution tunnel velocity calculated after the multi-point pitot traverse, ft/sec

k_p = Pitot tube constant, 85.49

C_p = Pitot tube coefficient: 0.99, unitless

ΔP* = Velocity pressure in the dilution tunnel, in H_2O

T_s = Absolute average gas temperature in the dilution tunnel, °R; (°R = °F + 460)

P_s = Absolute average gas static pressure in diltuion tunnel, = P_{bar} + P_g , in Hg

P_{bar} = Barometric pressure at test site, in. Hg

P_g = Static pressure of tunnel, in. H_20; (in Hg = in H_20/13.6)

M_s = **The dilution tunnel wet molecular weight; M_s = 28.78 assuming a dry weight of 29 lb/lb-mole

Sample calculation:

$$Fp = \frac{17.84}{18.57} = 0.961$$

$$V_s = 0.961 \times 85.49 \times 0.99 \times 0.262 \times \left(\frac{82.2 + 460}{\left(28.57 + \frac{-0.14}{13.6}\right) \times 28.78} \right)^{1/2}$$

V_s = **17.33** ft/s

*The ASTM test standard mistakenly has the square root of the average delta p instead of the average of the square root of delta p. The current EPA Method 2 is also incorrect. This was verified by Mike Toney at EPA.

**The ASTM test standard mistakenly identifies Ms as the dry molecular weight. It should be the wet molecular weight as indicated in EPA Method 2.

Equations and Sample Calculations – ASTM E3053 & E2515

Q_{sd} – Average gas flow rate in dilution tunnel, dscf/hr

ASTM E2515 equation (3)

$$Q_{sd} = 3600 \times (1 - B_{ws}) \times v_s \times A \times \frac{T_{std}}{T_s} \times \frac{P_s}{P_{std}}$$

Where:

3600	=	Conversion from seconds to hours (ASTM method uses 60 to convert in minutes)
B_{ws}	=	Water vapor in gas stream, proportion by volume; assume 2%
A	=	Cross sectional area of dilution tunnel, ft^2
T_{std}	=	Standard absolute temperature, 528 °R
P_s	=	Absolute average gas static pressure in diltuion tunnel, = P_{bar} + P_g , in Hg
T_s	=	Absolute average gas temperature in the dilution tunnel, °R; (°R = °F + 460)
P_{std}	=	Standard absolute pressure, 29.92 in Hg

Sample calculation:

$$Q_{sd} = 3600 \times (1 - 0.02) \times 17.33 \times 0.1963 \times \frac{528}{82.2 + 460} \times \frac{28.57 + \frac{-0.14}{13.6}}{29.92}$$

Q_{sd} = **11159.8** dscf/hr

Equations and Sample Calculations – ASTM E3053 & E2515

$V_{m(std)}$ – Volume of Gas Sampled Corrected to Dry Standard Conditions, dscf

ASTM E2515 equation (6)

$$V_{m(std)} = K_1 \times V_m \times Y \times \frac{P_{bar} + \left(\frac{\Delta H}{13.6}\right)}{T_m}$$

Where:

K_1	=	17.64 °R/in. Hg
V_m	=	Volume of gas sample measured at the dry gas meter, dcf
Y	=	Dry gas meter calibration factor, dimensionless
P_{bar}	=	Barometric pressure at the testing site, in. Hg
ΔH	=	Average pressure differential across the orifice meter, in. H_2O
T_m	=	Absolute average dry gas meter temperature, °R

Sample Calculation:

Using equation for Train 1:

$$V_{m(std)} = 17.64 \times 83.025 \times 1.009 \times \frac{\left(28.57 + \frac{1.41}{13.6}\right)}{(71.3 + 460)}$$

$V_{m(std)}$ = **79.749** dscf

Using equation for Train 2:

$$V_{m(std)} = 17.64 \times 86.527 \times 0.996 \times \frac{\left(28.57 + \frac{1.08}{13.6}\right)}{(71.4 + 460)}$$

$V_{m(std)}$ = **81.958** dscf

Using equation for ambient train:

$$V_{m(std)} = 17.64 \times 185.63 \times 0.998 \times \frac{\left(\underline{28.57} + \frac{0.00}{13.6}\right)}{(66.9 + 460)}$$

$V_{m(std)}$ = **177.195** dscf

Equations and Sample Calculations – ASTM E3053 & E2515

m_n – Total Particulate Matter Collected, mg

ASTM E2515 Equation (12)

$$m_n = m_p + m_f + m_g$$

Where:

m_p = mass of particulate matter from probe, mg

m_f = mass of particulate matter from filters, mg

m_g = mass of particulate matter from filter seals, mg

Sample Calculation:

Using equation for Train 1 (first hour):

m_n = 0.0 + 0.8 + 0.0

m_n = 0.8 mg

Using equation for Train 1 (remainder):

m_n = 0.0 + 1.9 + 0.1

m_n = 2.0 mg

Train 1 Aggregate = **2.8** mg

Using equation for Train 2:

m_n = 0.0 + 2.9 + 0.0

m_n = **2.9** mg

Equations and Sample Calculations – ASTM E3053 & E2515

C_s - Concentration of particulate matter in tunnel gas, dry basis, corrected to standard conditions, g/dscf

ASTM E2515 equation (13)

$$C_s = K_2 \times \frac{m_n}{V_{m(std)}}$$

Where:

K_2	=	Constant, 0.001 g/mg
m_n	=	Total mass of particulate matter collected in the sampling train, mg
$V_{m(std)}$	=	Volume of gas sampled corrected to dry standard conditions, dscf

Sample calculation:

For Train 1:

$$C_s = 0.001 \times \frac{2.8}{79.75}$$

$C_s =$ **3.51E-05** g/dscf

For Train 2

$$C_s = 0.001 \times \frac{2.9}{81.96}$$

$C_s =$ **3.54E-05** g/dscf

For Ambient Train

$$C_r = 0.001 \times \frac{0.1}{177.20}$$

$C_r =$ **0.000001** g/dscf

Equations and Sample Calculations – ASTM E3053 & E2515

E_T – Total Particulate Emissions, g

ASTM E2515 equation (15)

$$E_T = (c_s - c_r) \times Q_{std} \times \theta$$

Where:

C_s	=	Concentration of particulate matter in tunnel gas, g/dscf
C_r	=	Concentration particulate matter room air, g/dscf
Q_{std}	=	Average dilution tunnel gas flow rate, dscf/hr
θ	=	Total time of test run, minutes

Sample calculation:

For Train 1

E_T = (0.000035 - 0.000001) x 11159.8 x 637 /60

E_T = 4.09 g

For Train 2

E_T = (0.000035 - 0.000001) x 11159.8 x 637 /60

E_T = 4.13 g

Average

E = 4.11 g

Total emission values shall not differ by more than 7.5% from the total average emissions

7.5% of the average =	0.31
Train 1 difference =	0.02
Train 2 difference =	0.02

Equations and Sample Calculations – ASTM E3053 & E2515

PR - Proportional Rate Variation

ASTM E2515 equation (16)

$$PR = \left[\frac{\theta \times V_{mi} \times V_s \times T_m \times T_{si}}{\theta_i \times V_m \times V_{si} \times T_{mi} \times T_s} \right] \times 100$$

Where:

θ = Total sampling time, min

θ_i = Length of recording interval, min

V_{mi} = Volume of gas sample measured by the dry gas meter during the “ith” time interval, dcf

V_m = Volume of gas sample as measured by dry gas meter, dcf

V_{si} = Average gas velocity in the dilution tunnel during the "ith" time interval, ft/sec

V_s = Average gas velocity in the dilution tunnel, ft/sec

T_{mi} = Absolute average dry gas meter temperature during the "ith" time interval, ^oR

T_m = Absolute average dry gas meter temperature, ^oR

T_{si} = Absolute average gas temperature in the dilution tunnel during the "ith" time interval, ^oR

T_s = Absolute average gas temperature in the dilution tunnel, ^oR

Sample calculation (for the first 1 minute interval of Train 1):

$$PR = \left(\frac{637 \times 0.094 \times 17.33 \times (128.0 + 460) \times (71.3 + 460)}{1 \times 83.025 \times 18.07 \times (82.2 + 460) \times (75.0 + 460)} \right) \times 100$$

PR = 74 %

Equations and Sample Calculations – ASTM E3053 & E2515

PM_R – Average particulate emissions for full integrated test run, g/hr

ASTM E3053 equation (5)

$$PM_R = 60 (E_T/\theta)$$

Where,

E_T = Tota particulate emissions, grams

θ = Total length of full intergrated test run, min

Sample Calculation:

E_T (Dual train average) = 4.11 g

θ = 637 min

$PM_R = 60$ x (4.11 / 637)

PM_R = **0.39** g/hr

Equations and Sample Calculations – ASTM E3053 & E2515

PM_F – Average particulate emission factor for full integrated test run, g/dry kg of fuel burned

ASTM E3053 equation (6)

$$PM_F = E_T / M_{Bdb}$$

Where,

E_T = Tota particulate emissions, grams

M_{Bdb} = Weight of test fuel burned during test run, dry basis, kg

Sample Calculation:

E_T (Dual train average) = 4.11 g

M_{Bdb} = 8.98 kg

PM_F = 4.11 / 8.98)

PM_F = **0.46** g/kg

Equations and Sample Calculations – ASTM E3053 & E2515

Manufacturer:	Kuma
Model:	18
Run:	1
Category:	High

Equations used to calculate the parameters listed below are described in this appendix. Sample calculations are provided for each equation. The raw data and printout results from a sample run are also provided for comparison to the sample calculations.

M_{Bdb} – Weight of test fuel burned during test run, dry basis, kg

M_{BSidb} – Weight of test fuel burned during test run segment *i* , dry basis, kg

BR – Average dry burn rate over full integrated test run, kg/hr

BR_{Si} – Average dry burn rate over test run segment *i* , kg/hr

V_s – Average gas velocity in the dilution tunnel, ft/sec

Q_{sd} – Average gas flow rate in dilution tunnel, dscf/hr

$V_{m(std)}$ – Volume of Gas Sampled Corrected to Dry Standard Conditions, dscf

m_n – Total Particulate Matter Collected, mg

C_s - Concentration of particulate matter in tunnel gas, dry basis, corrected to standard conditions, g/dscf

E_T – Total Particulate Emissions, g

PR - Proportional Rate Variation

PM_R – Average particulate emissions for full integrated test run, g/hr

PM_F – Average particulate emission factor for full integrated test run, g/dry kg of fuel burned

Equations and Sample Calculations – ASTM E3053 & E2515

M_{FLdb} – Weight of test fuel, dry basis, kg

ASTM E3053 equation (1)

$$M_{FLdb} = \sum((M_{FLnwb})\ (100)\ /\ (100 + MC_{FLn}))$$

Where,

M_{FLdb} = Weight of Test Fuel Load, Dry Basis, kg (lb. / 2.2046)

M_{FLnwb} = Weight of each piece, n, in test fuel load, wet basis, kg (lb / 2.2046)

MC_{FLn} = Average fuel moisture of test piece, n, in test load, %, Dry Basis

n = Individual test fuel pieces that comprise the test fuel load

Sample Calculation (Data from Run 1):

$$M_{FLdb} = \sum((M_{FLnwb})\ (100)\ /\ (100 + MC_{FLn}))$$

Piece Count	M_{FLnwb} / 2.2046	(100) / (100 + MC_{FLn}))	(M_{FLnwb}) (100) / (100 + MC_{FLn}))
n =1	1.538	0.83589	1.285
n=2	1.647	0.83589	1.376
n=3	1.397	0.83729	1.170
n=4	2.083	0.80043	1.667
n=5	0.816	0.81588	0.666
		$\sum((M_{FLnwb})\ (100)\ /\ (100 + MC_{FLn}))$ =	**6.165**

Equations and Sample Calculations – ASTM E3053 & E2515

M_{SUdb} – Weight of Start-up fuel, dry basis, kg

ASTM E3053 equation (2)

$$M_{SUdb} = \Sigma((M_{SUnwb})\ (100)\ /\ (100 + MC_{SUn}))$$

Where,

M_{SUdb} = Weight of Start-up Fuel, Dry Basis, kg (lb. / 2.2046)

M_{SUnwb} = Weight of each Start-up piece, n, wet basis, kg (lb / 2.2046)

MC_{SUn} = Average Fuel moisture of Start-up fuel piece, n, %, Dry Basis

n = Individual Start-up fuel pieces

Sample Calculation (Data from Run 1):

$$M_{SUdb} = \Sigma((M_{SUnwb})\ (100)\ /\ (100 + MC_{SUn}))$$

$$M_{SUdb} = (4.9\ /\ 2.2046)\ x\ (100)\ /\ \ (100 + 20.67)$$

$$\mathbf{M_{SUdb} = 1.842}$$

Equations and Sample Calculations – ASTM E3053 & E2515

M_{Kdb} – Weight of kindling, dry basis, kg

ASTM E3053 equation (3)

$$M_{Kdb} = (M_{Kwb})\ (100)\ (100 + MC_K)$$

Where,

M_{Kdb} = Weight of Kindling, Dry Basis, kg (lb. / 2.2046)

M_{Kwb} = Weight of Kindling, Wet Basis, kg (lb. / 2.2046)

MC_K = Average Moisture of Kindling, % Dry Basis

Sample Calculation (Data from Run 1):

$$M_{Kdb} = (M_{Kwb})\ (100)\ (100 + MC_K)$$

$$M_{Kdb} = (3.268 / 2.2046) \times (100) / (100 + 8.2)$$

$M_{Kdb} = 1.370$

Equations and Sample Calculations – ASTM E3053 & E2515

M_{FREHdb} – Total weight of all remaining fuel at end of high-fire test run, kg

ASTM E3053 equation (4)

$$M_{FREHdb} = M_{RSUBdb} + M_{FLEHdb}$$

Where,

M_{FREHdb} = Total weight of all remaining fuel at end of High-Fire test run, kg (lb / 2.2046)

M_{RSUBdb} = Weight of residual start-up fuel bed when high fire test load is added, kg (lb / 2.2046)

M_{FLEHdb} = Weight of unburned portion of test fuel at the end of the High-Fire test, kg (lb / 2.2046)

Sample Calculation (Data from Run 1):

$$M_{FREHdb} = M_{RSUBdb} + M_{FLEHdb}$$

$$M_{FREHdb} = (2 / 2.2046) + (1.5 / 2.2046)$$

M_{FREHdb} = 1.588 kg

Equations and Sample Calculations – ASTM E3053 & E2515

M_{TFBHdb} – Total weight of all fuel burned during high-fire test run, kg, dry basis

ASTM E3053 equation (5)

$$M_{TFBHdb} = M_{Kdb} + M_{SUdb} + M_{FLdb} - M_{FREHdb}$$

Where,

M_{TFBHdb} = Total weight of all fuel burned during high fire test run, kg (lb/2.2046) dry basis

M_{Kdb} = Weight of Kindling, Dry basis, kg (lb/2.2046)

M_{SUdb} = Weight of strat-up fuel, dry basis, kg (lb/2.2046)

M_{FLdb} = Weight of test fuel load, dry basis, kg (lb / 2.2046)

M_{FREHdb} = Total weight of all remaining fuel at end of high burn run, kg (lb/2.2046)

Sample Calculation (Data from Run 1):

$$M_{TFBHdb} = M_{Kdb} + M_{SUdb} + M_{FLdb} - M_{FREHdb}$$

M_{TFBHdb} = 1.37 + 1.842 + 6.165 - 1.588

M_{TFBHdb} = 7.789 kg

Equations and Sample Calculations – ASTM E3053 & E2515

BR_H - Dry burn rate for high fire test test run

ASTM E3053 equation (6)

$$BR_H = 60(M_{FLdb} - M_{FLEHdb})/\theta_{H1}$$

Where,

BR_H = Dry burn rate for high fire test run, from time when test fuel is added to end of test run, kg/hr

M_{FLdb} = Weight of test fuel load, dry basis, kg

M_{FLEHdb} = Weight of unburned portion of test fuel load at the end ogf the high-fire test, kg

θ_{H1} = Total duration of high-fire test run, from time when test fuel is added to end of test run, min.

Sample Calculation (Data from Run 1):

$$BR_H = 60(M_{FLdb} - M_{FLEHdb})/\theta_{H1}$$

M_{FLdb} = 6.165

M_{FLEHdb} = 0.680

θ_{H1} = 146

B_{RH} = 2.254

Equations and Sample Calculations – ASTM E3053 & E2515

V_s – Average gas velocity in the dilution tunnel, ft/sec

ASTM E2515 equations (9)

$$V_s = F_p \times K_p \times C_P \times \left(\sqrt{\Delta P}\right)_{avg} \times \sqrt{\frac{T_s}{P_s \times M_s}}$$

Where:

F_p	=	Adjustment factor for pitot tube placement, Fp = $\frac{V_{strav}}{V_{scent}}$, ASTM E2515 Equation (1)
V_{scent}	=	Dilution tunnel velocity calculated after the multi-point pitot traverse at the center, ft/sec
V_{strav}	=	Dilution tunnel velocity calculated after the multi-point pitot traverse, ft/sec
k_p	=	Pitot tube constant, 85.49
C_p	=	Pitot tube coefficient: 0.99, unitless
ΔP*	=	Velocity pressure in the dilution tunnel, in H_2O
T_s	=	Absolute average gas temperature in the dilution tunnel, °R; (°R = °F + 460)
P_s	=	Absolute average gas static pressure in diltuion tunnel, = P_{bar} + P_g , in Hg
P_{bar}	=	Barometric pressure at test site, in. Hg
P_g	=	Static pressure of tunnel, in. H_20; (in Hg = in H_20/13.6)
M_s	=	**The dilution tunnel wet molecular weight; M_s = 28.78 assuming a dry weight of 29 lb/lb-mole

Sample calculation:

$$Fp = \frac{18.33}{18.31} = 1.001$$

$$V_s = 1.001 \times 85.49 \times 0.99 \times 0.262 \times \left(\frac{109.8 + 460}{\left(28.49 + \frac{-0.14}{13.6}\right) \times 28.78} \right)^{1/2}$$

$$V_s = \mathbf{18.51} \text{ ft/s}$$

*The ASTM test standard mistakenly has the square root of the average delta p instead of the average of the square root of delta p. The current EPA Method 2 is also incorrect. This was verified by Mike Toney at EPA.

**The ASTM test standard mistakenly identifies Ms as the dry molecular weight. It should be the wet molecular weight as indicated in EPA Method 2.

Equations and Sample Calculations – ASTM E3053 & E2515 Ec

Q_{sd} – Average gas flow rate in dilution tunnel, dscf/hr

ASTM E2515 equation (3)

$$Q_{sd} = 3600 \times (1 - B_{ws}) \times v_s \times A \times \frac{T_{std}}{T_s} \times \frac{P_s}{P_{std}}$$

Where:

3600	=	Conversion from seconds to hours (ASTM method uses 60 to convert in minutes)
B_{ws}	=	Water vapor in gas stream, proportion by volume; assume 2%
A	=	Cross sectional area of dilution tunnel, ft^2
T_{std}	=	Standard absolute temperature, 528 °R
P_s	=	Absolute average gas static pressure in diltuion tunnel, = P_{bar} + P_g , in Hg
T_s	=	Absolute average gas temperature in the dilution tunnel, °R; (°R = °F + 460)
P_{std}	=	Standard absolute pressure, 29.92 in Hg

Sample calculation:

$$Q_{sd} = 3600 \times (1 - 0.02) \times 18.51 \times 0.1963 \times \frac{528}{\#\#\#\# + 460} \times \frac{28.5 + \frac{-0.14}{13.6}}{29.92}$$

Q_{sd} = **11307.3** dscf/hr

quations and Sample Calculations – ASTM E3053 & E2515

$V_{m(std)}$ – Volume of Gas Sampled Corrected to Dry Standard Conditions, dscf

ASTM E2515 equation (6)

$$V_{m(std)} = K_1 \times V_m \times Y \times \frac{P_{bar} + \left(\frac{\Delta H}{13.6}\right)}{T_m}$$

Where:

K_1	=	17.64 °R/in. Hg
V_m	=	Volume of gas sample measured at the dry gas meter, dcf
Y	=	Dry gas meter calibration factor, dimensionless
P_{bar}	=	Barometric pressure at the testing site, in. Hg
ΔH	=	Average pressure differential across the orifice meter, in. H_2O
T_m	=	Absolute average dry gas meter temperature, °R

Sample Calculation:

Using equation for Train 1:

$$V_{m(std)} = 17.64 \times 30.718 \times 1.009 \times \frac{\left(28.49 + \frac{1.82}{13.6}\right)}{(67.3 + 460)}$$

$V_{m(std)}$ = **29.674** dscf

Using equation for Train 2:

$$V_{m(std)} = 17.64 \times 33.503 \times 0.996 \times \frac{\left(28.49 + \frac{1.50}{13.6}\right)}{(66.5 + 460)}$$

$V_{m(std)}$ = **31.969** dscf

Using equation for ambient train:

$$V_{m(std)} = 17.64 \times 30.43 \times 0.996 \times \frac{\left(\underline{28.49} + \frac{0.00}{13.6}\right)}{(67.7 + 460)}$$

$V_{m(std)}$ = **28.861** dscf

Equations and Sample Calculations – ASTM E3053 & E2515

m_n – Total Particulate Matter Collected, mg

ASTM E2515 Equation (12)

$$m_n = m_p + m_f + m_g$$

Where:

m_p = mass of particulate matter from probe, mg

m_f = mass of particulate matter from filters, mg

m_g = mass of particulate matter from filter seals, mg

Sample Calculation:

Using equation for Train 1 (first hour):

m_n = 0.0 + 2.4 + 0.0

m_n = 2.4 mg

Using equation for Train 1 (remainder):

m_n = 1.1 + 1.6 + 0.2

m_n = 2.9 mg

Train 1 Aggregate = **5.3** mg

Using equation for Train 2:

m_n = 1.2 + 4.8 + 0.0

m_n = **6.0** mg

Equations and Sample Calculations – ASTM E3053 & E2515

C_s - Concentration of particulate matter in tunnel gas, dry basis, corrected to standard conditions, g/dscf

ASTM E2515 equation (13)

$$C_s = K_2 \times \frac{m_n}{V_{m(std)}}$$

Where:

K_2	=	Constant, 0.001 g/mg
m_n	=	Total mass of particulate matter collected in the sampling train, mg
$V_{m(std)}$	=	Volume of gas sampled corrected to dry standard conditions, dscf

Sample calculation:

For Train 1:

$$C_s = 0.001 \times \frac{5.3}{29.67}$$

$C_s =$ **1.79E-04** g/dscf

For Train 2

$$C_s = 0.001 \times \frac{6.0}{31.97}$$

$C_s =$ **1.88E-04** g/dscf

For Ambient Train

$$C_r = 0.001 \times \frac{0.1}{28.86}$$

$C_r =$ **0.000003** g/dscf

Equations and Sample Calculations – ASTM E3053 & E2515

E_T – Total Particulate Emissions, g

ASTM E2515 equation (15)

$$E_T = \left(c_s - c_r\right) \times Q_{std} \times \theta$$

Where:

C_s	=	Concentration of particulate matter in tunnel gas, g/dscf
C_r	=	Concentration particulate matter room air, g/dscf
Q_{std}	=	Average dilution tunnel gas flow rate, dscf/hr
θ	=	Total time of test run, minutes

Sample calculation:

For Train 1

E_T = (0.000179 - 0.000003) x 11307.3 x 208 /60

E_T = 6.87 g

For Train 2

E_T = (0.000188 - 0.000003) x 11307.3 x 208 /60

E_T = 7.22 g

Average

E = 7.04 g

Total emission values shall not differ by more than 7.5% from the total average emissions

7.5% of the average =	0.53
Train 1 difference =	0.18
Train 2 difference =	0.18

Equations and Sample Calculations – ASTM E3053 & E2515

PR - Proportional Rate Variation

ASTM E2515 equation (16)

$$PR = \left[\frac{\theta \times V_{mi} \times V_s \times T_m \times T_{si}}{\theta_i \times V_m \times V_{si} \times T_{mi} \times T_s} \right] \times 100$$

Where:

θ = Total sampling time, min

θ_i = Length of recording interval, min

V_{mi} = Volume of gas sample measured by the dry gas meter during the "ith" time interval, dcf

V_m = Volume of gas sample as measured by dry gas meter, dcf

V_{si} = Average gas velocity in the dilution tunnel during the "ith" time interval, ft/sec

V_s = Average gas velocity in the dilution tunnel, ft/sec

T_{mi} = Absolute average dry gas meter temperature during the "ith" time interval, ^oR

T_m = Absolute average dry gas meter temperature, ^oR

T_{si} = Absolute average gas temperature in the dilution tunnel during the "ith" time interval, ^oR

T_s = Absolute average gas temperature in the dilution tunnel, ^oR

Sample calculation (for the first 1 minute interval of Train 1):

$$PR = \left(\frac{208 \times 0.135 \times 18.51 \times (76.0 + 460) \times (67.3 + 460)}{1 \times 30.718 \times 18.13 \times (109.8 + 460) \times (60.0 + 460)} \right) \times 100$$

PR = 89 %

Equations and Sample Calculations – ASTM E3053 & E2515

PM_R – Average particulate emissions for full integrated test run, g/hr

ASTM E3053 equation (5)

$$PM_R = 60 (E_T/\theta)$$

Where,

E_T = Tota particulate emissions, grams

θ = Total length of full intergrated test run, min

Sample Calculation:

E_T (Dual train average) = 7.04 g

θ = 208 min

$PM_R = 60$ x (7.04 / 208)

PM_R = **2.03** g/hr

Equations and Sample Calculations – ASTM E3053 & E2515

PM_F – Average particulate emission factor for full integrated test run, g/dry kg of fuel burned

ASTM E3053 equation (6)

$$PM_F = E_T / M_{Bdb}$$

Where,

E_T = Tota particulate emissions, grams

M_{Bdb} = Weight of test fuel burned during test run, dry basis, kg

Sample Calculation:

E_T (Dual train average) = 7.04 g

M_{Bdb} = 0.00 kg

PM_F = 7.04 / 0.00)

PM_F = ##### g/kg

Appendix A – Labeling & Owner's Manual

Installation	Clearance	Connector	A	B	C	D	E	F	G	H	I	J	K	L	M	N	O
Residential	Standard	Single Wall									:::						
Residential or Mobile home	Reduced	Double Wall									:::						
Insert	Standard	UL 1777 Liner	:::	:::	:::	:::	:::	:::								:::	
Alcove	Reduced	Double Wall					:::				:::	:::	:::	:::	:::		MAX.

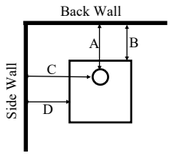

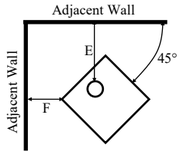

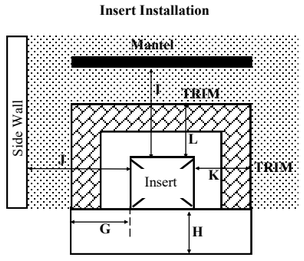

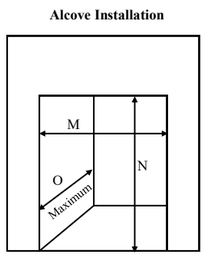

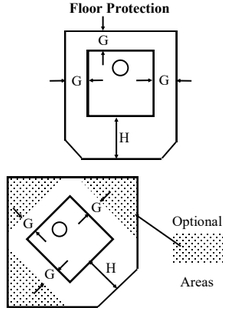

INSTALL AND USE ONLY IN ACCORDANCE WITH KUMA STOVES' INSTALLATION AND OPERATION INSTRUCTIONS. CONTACT LOCAL BUILDING OR FIRE OFFICIALS ABOUT RESTRICTIONS AND INSTALLATION INSPECTION IN YOUR AREA. REFER TO INSTALLATION INSTRUCTIONS FOR PRECAUTIONS REQUIRED FOR PASSING A CHIMNEY THROUGH A COMBUSTIBLE WALL OR CEILING.

ROOM HEATER, SOLID FUEL TYPE, ALSO FOR USE IN MOBILE HOMES. FOR USE WITH SOLID FUEL ONLY. USE ONLY SEASONED CORDWOOD. DO NOT CONNECT THIS UNIT TO A FLUE SERVICING ANOTHER APPLIANCE. DO NOT USE GRATE OR ELEVATE FIRE - BUILD WOOD FIRE DIRECTLY ON FIREBRICK. REPLACE GLASS ONLY WITH 5mm CERAMIC. ATTACH LEGS OR PEDESTAL USING INSTALLTION INSTRUCTIONS. BLOWER ELECTRICAL RATING: 115 VOLT, 18 WATT, 60 HERTZ. DO NOT ROUTE POWER CORD BENEATH HEATER.

USE ONLY LISTED CHIMNEY SYSTEMS THAT ARE 6" DIAMETER U.L. 103 TYPE HT, ALL FUEL, OR SOLID FUEL. MASONRY CHIMNEY SHOULD BE LISTED TO UL 1777. ONLY INSTALL INSERT INTO MASONRY OR UL127 FACTORY BUILT FIREPLACE. INSERT INSTALLATION MUST USE LISTED STAINLESS STEEL LINER. USE ONLY 24 MSG BLACK OR 25 MSG BLUED STEEL SINGLE WALL CONNECTOR FOR STANDARD CLEARANCE. USE ONLY LISTED DOUBLE WALL CONNECTOR FOR REDUCED CLEARANCE AND MOBILE HOMES. SEE DIAGRAMS FOR STANDARD AND REDUCED CLEARANCE DIMENSIONS. USE ONLY U.L. 1618 TYPE 1 (EMBER PROTECTION) OR TYPE 2 (R-VALUE 1.0) HEARTH PAD OR EQUIVALENT. SEE DIAGRAM FOR HEARTH DIMENSIONS.

This wood heater needs periodic inspection and repair for proper operation. Consult the owner's manual for further information. It is against federal regulations to operate this wood heater in a manner inconsistent with the operating instruction in the owner's manual

OMNI-Test Laboratories Inc.
Portland OR, USA

MANUFACTURED BY:
KUMA STOVES INC
50145 N OLD HWY 95
RATHDRUM ID 83858

MODEL NAME: K-180

Serial Number

Emissions Test Report #: 0123WM011E Safety Test Report # TBD



CAUTION: HOT WHILE IN OPERATION - DO NOT TOUCH - KEEP CHILDREN AND CLOTHING AWAY - CONTACT MAY CAUSE SKIN BURNS. SEE NAMEPLATE AND INSTRUCTIONS. KEEP FURNISHINGS AND OTHER COMBUSTIBLE MATERIALS A CONSIDERABLE DISTANCE FROM THE APPLIANCE. DO NOT OVERFIRE - IF HEATER OR CHIMNEY CONNECTOR GLOWS, YOU ARE OVERFIRING. INSPECT AND CLEAN CHIMNEY FREQUENTLY - UNDER CERTAIN CONDITIONS OF USE, CREOSOTE BUILDUP MAY OCCUR RAPIDLY. DO NOT PASS CONNECTOR PIPE THROUGH COMBUSTIBLE WALLS OR CEILINGS. DO NOT OBSTRUCT BENEATH THE HEATER.

☐ JAN ☐ FEB ☐ MAR ☐ APR ☐ MAY ☐ JUN ☐ JUL ☐ AUG ☐ SEP ☐ OCT ☐ NOV ☐ DEC ☐ 2019 ☐ 2020 ☐ 2021 ☐ 2022

U.S. ENVIRONMENTAL PROTECTION AGENCY: Certified to comply with 2020 particulate emission standards using cord wood. 0.72 Grams per hour. Tested to ASTM 3053-2017.

Model # K-180:

Aspen LE, Tamarack LE, Aberdeen LE, Alpine LE,

Tested and listed by OMNI-Test Laboratories Inc.
Portland OR, USA

Emissions tested to: ASTM 3053-2017
Report# 0123WM011E

Safety tested to UL 1482
Report # TBD

INSTALLATION AND OPERATING INSTRUCTIONS

SAVE THESE INSTRUCTIONS

This manual describes the installation and operation of the Kuma Model K-180 Catalytic equipped wood heater. This heater meets the 2020 U.S. Environmental Protection Agency's cord wood emission limits for wood heaters sold after May 15, 2020. Under specific test conditions (ASTM 3053-2017) this heater has been shown to deliver heat at rates ranging from 10,614 to 32,121 Btu/hr. and an efficiency of 81.0% (High Heating Value). Please visit https://www.kumastoves.com/content/page/EPA for a detailed explanation of stove efficiencies. Particulate emissions are 0.72 grams per hour and average CO emissions are 0.10 grams per minute.

Please read the safety precautions and the entire installation and operation instructions carefully. Failure to properly install and maintain your wood stove can result in an unsafe condition.

TABLE OF CONTENTS

SECTION 1 - SAFETY PRECAUTIONS

SECTION 2 - SPECIFCATIONS

SECTION 3 - INSTALLATION INSTRUCTIONS

SECTION 4 - OPERATING INSTRUCTIONS

SECTION 5 - CATALYST INFORMATION

SECTION 6 - MAINTENANCE

SECTION 7 - TROUBLESHOOTING

SECTION 8 - WARRANTY

SECTION 1 - SAFETY PRECAUTIONS

WARNING

- If this stove is not properly installed, a house fire can occur. For your protection, follow the installation instructions provided. We recommend contacting local building or fire officials regarding restrictions and installation inspection requirements in your area. **We also recommend that your Kuma stove be installed by a properly trained and licensed installer, preferably an NFI (National Fireplace Institute) expert.**
- **DO NOT CONNECT THIS UNIT TO A CHIMNEY FLUE SERVICING ANOTHER APPLIANCE.**
- **Do not burn garbage or flammable fluids such as gasoline, naptha or engine oil**. Do not use charcoal lighter fluid or similar liquids to start or "freshen up" a fire in this heater. Keep all such fluids well away from the heater while in use. Storing these fluids near a stove could cause a fire.
- **DO NOT CONNECT TO ANY AIR DISTRIBUTION OR DUCT SYSTEM.**
- **DO NOT OVERFIRE.** If any part of the stove or chimney glows, the stove is in an over fire condition. If this happens, shut the air control off immediately. Over firing can cause damage.
- **WARNING: DO NOT INSTALL IN A SLEEPING ROOM.**
- **An improperly drafting stove can cause smoke and carbon monoxide to enter the home. Smoke detectors and carbon monoxide monitors are recommended to be installed in the same room as this heater.**
- **CAUTION: THE STRUCTURAL INTEGRITY OF THE FLOOR, WALLS, ROOF/CEILING, AND VAPOR BARRIERS MUST BE MAINTAINED.**
- **DO NOT USE SINGLE WALL PIPE OR CONNECTOR PIPE FOR ANY CHIMNEY APPLICATION, EXTERIOR OR THROUGH THE WALL OR CEILING.** Single wall pipe may only be used as a connection between the stove and an approved masonry or stainless steel chimney. **Single wall pipe may not be used as a connector in mobile homes.**
- When installing into an existing masonry or metal chimney, examine the chimney system carefully. If you have any questions, seek professional advice. We recommend having existing chimneys cleaned and inspected by a qualified professional prior to the installation of your new stove.
- **NOTE ALL MINIMUM CLEARANCE REQUIREMENTS TO COMBUSTIBLES.** Installation must comply with minimum clearances as listed in this manual. (see section 2) **Clearances may only be reduced by means approved by the regulatory authority.**
- Do not operate this stove with the door in an open position, except for cracking open during start-up. Continued operation with the door open can cause overheating of the unit, and expose embers to nearby combustibles.
- **Do not operate with broken glass. Do not abuse glass such as striking or slamming the door.**
- This stove must be connected to a minimum 6" diameter listed chimney that complies with U.L. type 103HT factory built chimney or a code approved masonry chimney. If the masonry chimney does not meet code, a U.L. 1777 approved liner must be installed.
- When connecting single wall or double wall connector pipe to the stove and chimney, use 3 screws per pipe joint including 3 screws securing the pipe to the stove. Depending on the type of double wall pipe you are using, it may also be necessary to fasten it at the chimney. Simpson Duravent's DVL double wall uses a snap lock connector and does not need screws.
- Use only approved components for Chimney and Connector. Field fabricated or "makeshift" components are not allowed and can cause a fire.
- **DO NOT USE THIS STOVE WITHOUT THE BAFFLE BOARDS AND CERAMIC INSULATION PACKAGED WITH YOUR STOVE.**
- When connecting this stove to a masonry chimney, make sure you observe all applicable clearances including walls, ceilings and other combustible material. A masonry chimney must be minimum 6" diameter and constructed with a liner according to NFPA code 211. If you have any questions about the condition or the code compliance of your masonry chimney, please speak with a qualified professional.
- HOT WHILE IN OPERATION. KEEP CHILDREN, CLOTHING AND FURNITURE AWAY. CONTACT MAY CAUSE SKIN BURNS.

SECTION 2 - SPECIFICATIONS

Listing Tag:

Installation	Clearance	Connector	A	B	C	D	E	F	G	H	I	J	K	L	M	N	O
Residential	Standard	Single Wall															
Residential or Mobile home	Reduced	Double Wall															
Insert	Standard	UL 1777 Liner															
Alcove	Reduced	Double Wall															
																	MAX

Back Wall
Side Wall
Adjacent Wall
Insert Installation
Alcove Installation
Floor Protection
Optional Hearth Areas

INSTALL AND USE ONLY IN ACCORDANCE WITH KUMA STOVES' INSTALLATION AND OPERATION INSTRUCTIONS. CONTACT LOCAL BUILDING OR FIRE OFFICIALS ABOUT RESTRICTIONS AND INSTALLATION INSPECTION IN YOUR AREA. REFER TO INSTALLATION INSTRUCTIONS FOR PRECAUTIONS REQUIRED FOR PASSING A CHIMNEY THROUGH A COMBUSTIBLE WALL OR CEILING.

ROOM HEATER, SOLID FUEL TYPE. ALSO FOR USE IN MOBILE HOMES FOR USE WITH SOLID FUEL ONLY. USE ONLY SEASONED CORDWOOD DO NOT CONNECT THIS UNIT TO A FLUE SERVICING ANOTHER APPLIANCE. DO NOT BURN GARBAGE. DO NOT BURN TREATED WOOD. FIREBRICK DIRECTLY ON FIREBRICK. REPLACE GLASS ONLY WITH 5mm CERAMIC. ATTACH LEGS OR PEDESTAL USING INSTALLTION INSTRUCTIONS. BLOWER ELECTRICAL RATING: 115 VOLT, 18 WATT, 60 HERTZ DO NOT ROUTE POWER CORD BENEATH HEATER

USE ONLY LISTED CHIMNEY SYSTEMS THAT ARE 6" DIAMETER UL 103 TYPE HT, ALL FUEL, OR SOLID FUEL, MASONRY CHIMNEY SHOULD BE LINED WITH LISTED LINER. CONNECTORS FOR USE WITH RV OR UL127 FACTORY BUILT FIREPLACE. INSERT INSTALLATION MUST USE LISTED STAINLESS STEEL LINER. USE ONLY 24 MSG BLACK OR 25 MSG BLUED STEEL SINGLE WALL CONNECTOR FOR STANDARD CLEARANCE AND MOBILE HOMES. SEE DIAGRAMS FOR STANDARD AND REDUCED CLEARANCE DIMENSIONS. USE ONLY UL 1618 TYPE 1 (EMBER PROTECTION) OR TYPE 2. (R. HEARTH DIMENSIONS

This wood heater needs periodic inspection and repair for proper operation. Consult the owner's manual. It is unlawful to operate this wood heater in a manner inconsistent with the operating instructions in the owner's manual

OMNI-Test Laboratories Inc. Portland OR, USA

MANUFACTURED BY: KUMA STOVES PC 50145 N GOLD HWY 95 RATHDRUM ID 83858

Emissions Test Report #: 0123WM01E Safety Test Report #: TBD

CAUTION: HOT WHILE IN OPERATION - DO NOT TOUCH - KEEP CHILDREN AND CLOTHING AWAY - CONTACT MAY CAUSE SKIN BURNS. SEE NAMEPLATE AND INSTRUCTIONS. KEEP FURNISHINGS AND OTHER COMBUSTIBLE MATERIALS A CONSIDERABLE DISTANCE FROM THE APPLIANCE. DO NOT OVERFIRE - IF HEATER OR CHIMNEY CONNECTOR GLOWS, YOU ARE OVERFIRING. INSPECT AND CLEAN CHIMNEY FREQUENTLY - UNDER CERTAIN CONDITIONS OF USE, CREOSOTE BUILDUP MAY OCCUR RAPIDLY. DO NOT PASS CONNECTOR PIPE THROUGH COMBUSTIBLE WALLS OR CEILINGS. DO NOT OBSTRUCT BENEATH THE HEATER.

MODEL NAME: K-180

Serial Number

JAN	FEB	MAR	APR	MAY	JUN	JUL	AUG	SEP	OCT	NOV	DEC	2019	2020	2021	2022
☐	☐	☐	☐	☐	☐	☐	☐	☐	☐	☐	☐	☐	☐	☐	☐

U.S. ENVIRONMENTAL PROTECTION AGENCY: Certified to comply with 2020 particulate emission standards using cord wood. 0.72 Grams per hour. Tested to ASTM 3053-2017.

Dimensional Drawing TBD

SECTION 3 — INSTALLATION INSTRUCTIONS

WARNING
• Install and use this stove in accordance with the manufacturer's installation and operating instructions. It is highly recommended that this stove is installed by a qualified professional certified by the National Fireplace Institute. • The structural integrity of the floor, walls and ceiling/roof must be maintained. Use additional bracing if required. Never cut a load bearing wall or engineered truss. • NEVER INSTALL A STOVE IN A SLEEPING ROOM • This stove is heavy: Get help from another person and use proper lifting techniques

STOVE ASSEMBLY

Uncrate the stove. Each component of the stove will be included in a separate box. Follow the instructions located in each box to install the components of the stove. Assemble the stove in the following order:

1. Lay the stove on to its back
2. Install the Ash Pan Kit (optional)
3. Install the Legs or Pedestal Kit
4. Carefully set the stove upright
5. Install the door
6. Install the blower (optional)

FLOOR PROTECTION REQUIREMENTS

TBD

MINIMUM CLEARANCE REQUIREMENTS

TBD

CHIMNEY AND CONNECTOR PIPE REQUIREMENTS

A properly installed and maintained venting system is critical to the safe operation of your wood stove. This stove may be connected to a factory built **all fuel chimney system** that has been safety tested to the UL-103HT standard or to a lined **masonry chimney** that meets the standards of NFPA 211. The **connector pipe** is the portion of the venting system that connects the stove to the chimney system. Chimney connector must be 24ga. single wall black stove pipe or a listed double wall connector pipe. Listed double wall connector pipe is required for mobile home installation.

When choosing the location for your stove, decide on a central location in the main living area of the home. Uninhabited areas of the home such as an uninsulated basement or a garage would be an inefficient location for the heater. Also consider not placing the chimney too close to your neighbors or in a valley that would cause a nuisance or unhealthy outdoor air quality. For proper draft, the chimney must exit the roof a minimum of 3 feet and at least 2 feet above any portion of the roof that is within 10 feet of the chimney.

Minimum Flue Height Recommendations	
No offsets in the chimney	14 ft
30° or 45° offsets in the chimney	15 ft
90° offsets in the chimney	16 ft.
90° offsets with 2-3 feet of horizontal run	20 ft.
90° offsets into exterior chimney	22 ft.

WHEN CONNECTING TO AN ALL FUEL CHIMNEY SYSTEM

WARNING

- For chimney installation instructions, carefully follow the installation manual that came with your all fuel chimney system.
- Your chimney must meet the UL-103HT standard. Do not mix different brands of chimney parts.
- Do not use connector pipe to pass through an attic, closet, wall, floor or ceiling.
- Use only pre-fabricated listed chimney and connector pipe. Field fabricated or "makeshift" parts could result in a chimney or house fire.
- Inspect all chimney parts for damage. Do not use any damaged chimney parts

An all fuel chimney system consists of prefabricated metal chimney parts that have been designed and tested for use with modern wood stoves. Examples include:

- **DuraTech manufactured by DuraVent**
- **Excel manufactured by ICC Chimney**
- **Ultra Temp manufactured by Selkirk**
- **Temp/Guard manufactured by Metal-Fab**

When choosing a location for your chimney you will need to study the clearance requirements for both the stove and the chimney. Many chimney systems require a 2" air space around the pipe. Refer to the clearance diagrams in section 2 for minimum clearances around this stove. You will need to install supports, braces, shielding and firestops according to the chimney manufacturer's recommendations. When passing the chimney through an attic space an insulation shield must be used to ensure that no insulation can contact the chimney. For safety, the chimney must penetrate the roof a minimum of 3 feet AND must be at least 2 feet higher than any part of the roof that is within 10 feet of the chimney. For proper draft, the venting system (chimney + connector pipe) should be at least 14 feet from the stove top to the venting cap. If you live in a snowy region and you have a metal roof, consider adding snow breaks or diverters to your roof to prevent damage from sliding snow and ice.

Typical installation of an all fuel chimney system

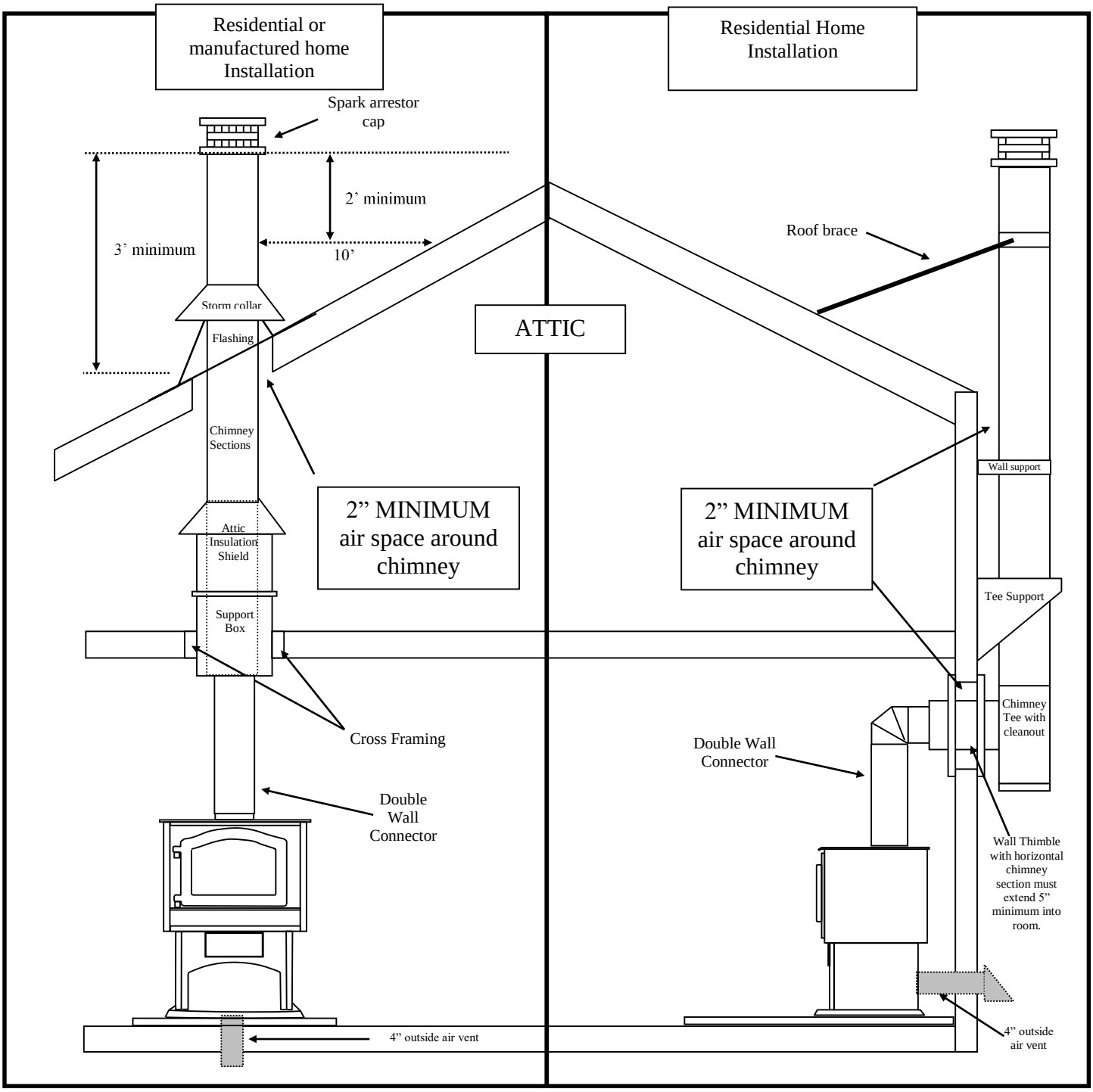

ADDITIONAL REQUIREMENTS FOR MANUFACTURED (MOBILE) HOMES

WARNING

- The structual integrity of the mobile home floor, wall and ceiling/roof must be maintained.
- Do not install in a sleeping room of a mobile home.

- An outside air kit (KA OA 1) is required for all mobile home installations. Follow the instructions located in the box.
- Double wall connector pipe is required for all mobile homes.
- Using 8 gauge ground wire and appropriate connectors, you must drill through the hearth and connect the stove to the metal frame underneath the mobile home.
- When required by local code, you will need to fasten the stove to the floor of the mobile home.

WHEN CONNECTING TO A MASONRY CHIMNEY

WARNING

- WHEN PENETRATING A COMBUSTIBLE WALL TO CONNECT TO AN OUTSIDE MASONRY CHIMNEY YOU MUST BE CERTAIN THAT THE WALL PASS THROUGH IS A SAFE AND LISTED METHOD.
- The connection between your chimney and this stove must be constructed according to the NFPA 211 standard. See Figure 6-7.5 from the **NFPA 211-2016, *Standard for Chimneys*** below

Your masonry chimney must be built according to the NFPA 211 standard. Visit nfpa.org for free access to the standard. Have a certified chimney sweep clean and inspect your chimney to make sure that there are no cracks, damaged mortar joints, or blockages. Your chimney must have a 5/8" thick fireclay liner. If your chimney does not have a 5/8" thick fireclay liner or it is damaged, you must install an insulated chimney liner that will meet the UL 1777 standard for chimney liners. Kuma recommends that an insulated chimney liner always be installed into a masonry chimney for improved performance and ease of cleaning.

FIGURE 6-7.5 Chimney connector systems and clearances from combustible walls for residential heating appliances.

System		Clearance (in.)/(mm)
A	Minimum 3.5 in. (90 mm) thick brick masonry wall framed into combustible wall with a minimum of 12-in. (305-mm) brick separation from clay liner to combustibles. Fireclay liner (ASTM C 315, *Standard Specification for Clay Fire Linings*, or equivalent), minimum ⅝-in. (16-mm) wall thickness, shall run from outer surface of brick wall to, but not beyond, the inner surface of chimney flue liner and shall be firmly cemented in place.	12/305
B	Solid-insulated, listed factory-built chimney length of the same inside diameter as the chimney connector and having 1 in. (25.4 mm) or more of insulation with a minimum 9-in. (229-mm) air space between the outer wall of the chimney length and combustibles. The inner end of the chimney length shall be flush with the inside of the masonry chimney flue and shall be sealed to the flue and to the brick masonry penetration with non-water-soluble refractory cement. Supports shall be securely fastened to wall surfaces on all sides. Fasteners between supports and the chimney length shall not penetrate the chimney liner.	9/229
C	Sheet steel chimney connector, minimum 24 gauge [0.024 in. (0.61 mm)] in thickness, with a ventilated thimble, minimum 24 gauge [0.024 in. (0.61 mm)] in thickness, having two 1-in. (25.4-mm) air channels, separated from combustibles by a minimum of 6 in. (152 mm) of glass fiber insulation. Opening shall be covered, and thimble supported with a sheet steel support, minimum 24 gauge [0.024 in. (0.61 mm)] in thickness. Supports shall be securely fastened to wall surfaces on all sides and shall be sized to fit and hold chimney section. Fasteners used to secure chimney section shall not penetrate chimney flue liner.	6/152
D	Solid-insulated, listed factory-built chimney length with an inside diameter 2 in. (51 mm) larger than the chimney connector and having 1 in. (25 mm) or more of insulation, serving as a pass-through for a single wall sheet steel chimney connector of minimum 24 gauge [0.024 in. (0.61 mm)] thickness, with a minimum 2-in. (51-mm) air space between the outer wall of chimney section and combustibles. Minimum length of chimney section shall be 12 in. (305 mm). Chimney section concentric with and spaced 1 in. (25.4 mm) away from connector by means of sheet steel support plates on both ends of chimney section. Opening shall be covered, and chimney section supported on both sides with sheet steel supports of minimum 24 gauge [0.024 in. (0.61 mm)] thickness. Supports shall be securely fastened to wall surfaces on all sides and shall be sized to fit and hold chimney section. Fasteners used to secure chimney section shall not penetrate chimney flue liner.	2/51

Additional requirements:

1. Insulation material used as part of wall pass-through system shall be of noncombustible material and shall have a thermal conductivity of 1.0 Btu-in./hr-ft^2-°F (4.88 kg-cal/hr-m^2-°C) or less.
2. All clearances and thicknesses are minimums; larger clearances and thicknesses shall be permitted.
3. Any material used to close up an opening for the connector shall be of noncombustible material.
4. A connector to a masonry chimney, except for System B, shall extend in one continuous piece through the wall pass-through system and the chimney wall to the inner face of the flue liner, but not beyond.

Reprinted with permission from NFPA 211-2016, *Standard for Chimneys, Fireplaces, Vents, and Solid Fuel-Burning Appliances*, Copyright © 2015, National Fire Protection Association, Quincy, MA. This reprinted material is not the complete and official position of the NFPA on the referenced subject, which is represented only by the standard in its entirety which may be obtained through the NFPA website at www.nfpa.org.

WHEN CONNECTING TO A MASONRY FIREPLACE

WARNING
This stove must be connected to a code approved (e.g. NFPA 211) masonry chimney with a 6" flue liner. If the masonry chimney does not meet code, a U.L. 1777 approved liner must be installed.

This section to be completed after the safety testing certification is complete.

SECTION 4 - OPERATING INSTRUCTIONS

- NEVER USE FLAMMABLE LIQUIDS TO START OR FRESHEN UP A FIRE
- CAUTION: Do not use any fuels that are not seasoned natural wood.
- Do not leave the stove unattended with the door open.
- DO NOT OVERFIRE THIS HEATER – Attempts to achieve heat output rates that exceed heater design specifications can result in permanent damage to the heater and to the catalytic combustor.

SELECTING WOOD

The leading cause for creosote build-up in the stove or chimney is moisture in the wood. Wood should be protected from rain and seasoned for 1 full year prior to being used. Your wood must have a moisture content of 20% or less. You will need to use a moisture meter to determine the moisture content of the wood. The recommended wood length for this heater is 16". This heater is designed to burn natural wood only. Higher efficiencies and lower emissions generally result when burning air dried seasoned hardwoods, as compared to softwoods or to green or freshly cut hardwoods.

DO NOT BURN:

a. Garbage;
b. Lawn clippings or yard waste;
c. Materials containing rubber, including tires;
d. Materials containing plastic;
e. Waste petroleum products, paints or paint thinners, or asphalt products;
f. Materials containing asbestos;
g. Construction or demolition debris;
h. Railroad ties or pressure-treated wood;
i. Manure or animal remains;
j. Salt water driftwood or other previously salt water saturated materials;
k. Unseasoned wood; or
l. Paper products, cardboard, plywood, or particleboard.

Burning these materials may result in release of toxic fumes or render the heater ineffective and cause smoke. The prohibition against burning these materials does not prohibit the use of fire starters made from paper, cardboard, saw dust, wax and similar substances.

UNDERSTANDING DRAFT

Draft is the force which moves exhaust from the appliance up through the chimney. Factors that can affect the way you stove drafts are:

- **The length of your chimney** can create excessive or inadequate draft.
- **Wind** can create excessive or inadequate draft.
- **Creosote buildup** in your chimney can create inadequate draft.
- **Nearby obstructions** or geographical features can create inadequate draft.
- **A cold chimney** can create inadequate draft.
- **Air density and moisture** in the air can create inadequate draft.

Too much draft may cause excessive temperatures in the appliance and may damage the internal components of the stove. An uncontrollable burn or excessive temperature indicates excessive draft.

Inadequate draft may cause back puffing into the room and creosote formation in the chimney. Inadequate draft will cause the appliance to leak smoke and carbon monoxide into the room through appliance and chimney connector joints.

UNDERSTANDING HYBRID WOOD STOVE TECHNOLOGY

This stove's burn system combines the features of non-catalytic technology with the clean efficient burn of catalytic wood stove to create an easy to use, ultra-low emission hybrid appliance. Read about each feature below to help you operate your stove efficiently and beautifully

1 Bypass Control

2 Primary Air Control

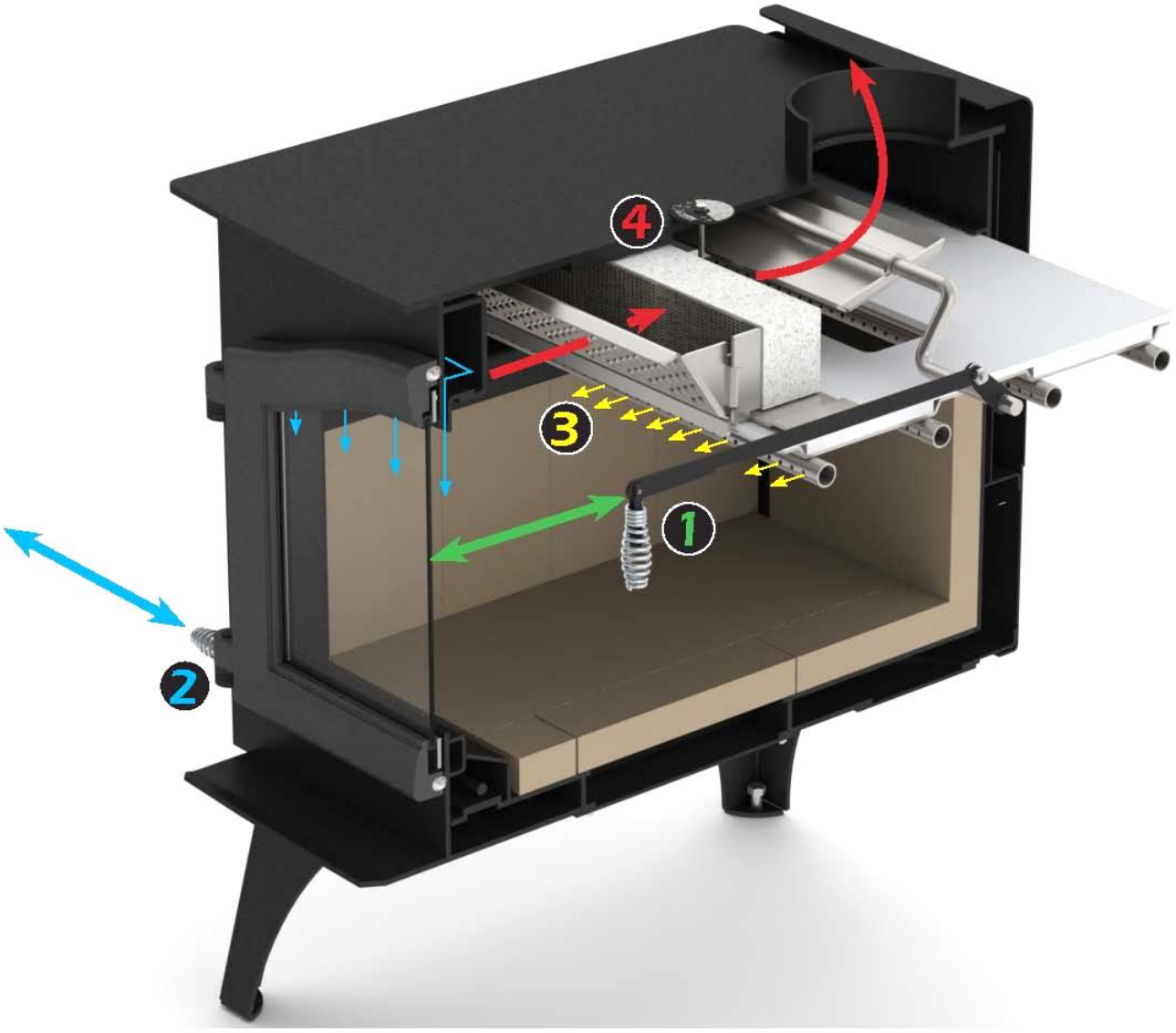

3 Secondary Burn System

4 Catalytic & Catalytic Thermometer

1. **Bypass Control** – Located in the upper right side of the stove, the bypass control allows smoke and heat to temporarily bypass the hybrid burn system. This helps to quickly heat the chimney and prevent any smoke from coming into the room when the door is open. Pulling the lever towards you then down will open the bypass plate. Lifting up then pushing in will close the bypass plate.

    a. Only open the bypass when starting or re-fueling your stove. During normal operation, the bypass remains closed.

    b. Never open the wood loading door unless you have opened the bypass plate first. If you do this, smoke will spill into the room.

2. **Primary Air Control** – Located on the lower right side of the stove, this control changes the rate of burn for the stove. Slide out for high heat output and slide in for low heat output. You can operate the stove at any burn rate in between high and low.

    a. Always set the air control to high for 20 to 30 minutes when starting or refueling your stove. This allows the stove and chimney to quickly come up to operating temperature.

    b. When set to high, the primary air washes the glass as it feeds the fire to help keep it clean. If your glass has built up any smoke deposits from slow burning, set the air control to high for 20 to 30 minutes.

    c. Never over fire the stove by leaving the air control on high for too long (see Catalytic and Catalytic Thermometer below).

3. **Secondary Burn System** – There are no controls for this system. The stove will automatically draw air into the secondary burn tubes to re-burn smoke before it reaches the catalyst.

4. **Catalytic & Catalytic Thermometer** – The catalytic is a metal honeycomb shaped device that cleans up most of the remaining smoke before it travels up the chimney. The catalytic thermometer shows you the correct temperature to operate the stove at.

    a. Always operate the stove in the active range.

    b. There is a caution symbol on the probe warning you that your catalytic combustor is too hot.

    c. Use the Primary Air Control to change the temperature of the stove.

    d. Reload your stove before the catalytic combustor becomes inactive.



LIGHTING A FIRE

1. Start by sliding the air control out to fully open.
2. Pull open the bypass plate and open the wood loading door
3. Place wood pieces directly on the firebox bottom: using a grate will allow too much air to the coal bed and will result in incomplete combustion of the wood. Start by loading larger pieces of wood into the firebox bottom then stack progressively smaller pieces so that the kindling pieces are at the top of the stack. You may use a fire starter such as shredded paper on top of the kindling. When starting a fire you should never use un-split pieces of wood unless they are small, such as twigs and branches.



4. Light the Fire, you can optionally leave the door slightly cracked open to aid in the start-up of your stove. Close the door once the fire is well lit. Do not leave the stove unattended with the door open.
5. After 15 minutes or Once the catalytic thermometer 1st reaches the active range, close the bypass control to engage the combustor.
6. Leave the air control open for 20-30 minutes so that the fire becomes well established. If you shut the stove down too soon, it may go out or the combustor may stop working.
7. Begin to regulate the heat output and burn rate by sliding in the primary air control. Use the following table to adjust your rate of burn.

Desired Burn Rate	Position of the air control	Approximate Burn Time
Low Burn	Fully Closed	13 hours
Medium Burn	About 1/2" Open	11 hours
High Burn and Start Up	Fully Open	5 hours

ADDING MORE WOOD TO THE FIRE

1. Start by sliding the air control to fully open and wait 1 minute to allow the coals to become active.
2. Pull open the bypass plate and wait 1 minute to allow the smoke to draft up the chimney
3. Slowly open the wood loading door and rake the coals breaking up any larger pieces
4. Add wood then shut the door but leave the air control and the bypass control in the open position.
5. As soon as the catalytic thermometer is in the active range, close the bypass control
6. Leave the air control open for 10-20 minutes so that the fire becomes well established then begin to adjust you rate of burn.

ADDITIONAL TIPS FOR BURNING EFFICIENTLY

Burning wood produces both visible emissions (e.g. particulate matter or smoke) as well as invisible

emissions (e.g. Carbon Monoxide). When operating your stove, periodically check for visible emissions coming from the chimney and adjust the burn rate and fuel load to reduce emissions. Remember to let your stove burn open for 20-30 minutes each time you reload it with wood. Shutting the air control prematurely can cause excessive creosote in the chimney. This wood heater has a manufacturer-set minimum low burn rate that must not be altered. It is against federal regulations to alter this setting or otherwise operate this wood heater in a manner inconsistent with operating instructions in this manual. Small hot fires produce less creosote than long, low smoldering fires. When you start your stove or reload your stove with more wood, open the draft fully and burn the stove at high burn for 10-30 minutes to heat up the chimney and secondary burn system. This ensures that when the draft control is pushed in for a lower, longer burn, the stove will burn cleaner.

SECTION 5 - CATALYST INFORMATION

TAMPER WARNING

This wood heater contains a catalytic combustor which needs periodic inspection and replacement for proper operation. It is against federal regulations to operate this wood stove in a manner inconsistent with the operating instructions in this manual, or if the catalytic element is deactivated or removed.

CATALYST TYPE

The combustor supplied with this wood stove is an Applied Catalysts ACI-5M combustor. Please refer to section 6 for catalyst maintenance. Refer to section 7 for catalyst troubleshooting. Refer to section 8 for catalyst warranty information.

CATALYST MONITORING

It is important to periodically monitor the operation of the catalytic combustor to ensure that it is functioning properly and to determine when it needs to be replaced. A non-functioning combustor will result in a loss of heating efficiency, and an increase in creosote and emissions. Following is a list of items that should be checked on a periodic basis:

1. Combustors should be visually inspected at least three times during the heating season to determine if physical degradation has occurred. Actual removal of the combustor is not recommended unless more detailed inspection is warranted because of decreased performance. If any of these conditions exists, refer to Catalyst Troubleshooting section of this owner's manual.
2. This hybrid heater is equipped with a temperature probe to monitor catalyst operation. Properly functioning combustors typically maintain temperatures in excess of 500°F, and often reach temperatures in excess of 1,000°F. If catalyst temperatures are not in excess of 500°F, refer to the Catalyst Troubleshooting section of this owner's manual.
3. You can get an indication of whether the catalyst is working by comparing the amount of smoke leaving the chimney when the smoke is going through the combustor and catalyst light-off has been achieved, to the amount of smoke leaving the chimney when the smoke is not routed through the combustor (bypass mode).
    - Step 1—Light stove in accordance with instructions in section 4.
    - Step 2—With smoke routed through the catalyst, go outside and observe the emissions leaving the chimney.
    - Step 3—Engage the bypass mechanism and again observe the emissions leaving the chimney.
    - Significantly more smoke will be seen when the exhaust is not routed through the combustor (bypass mode).

READING THE CATALYST PROBE

Follow the instructions in section 4 to build and maintain a fire. During normal operation the probe should read in the active range. If, during normal operation, the probe reads less than the active range, the stove should be refueled following the instruction in section 4. If the probe is climbing above the active range, you need to decrease the primary air control so that you do not over-fire the stove or catalyst.

SECTION 6 - MAINTENANCE

WARNING
This wood heater needs periodic inspection and repair for proper operation.

FIRE EXTINGUISHER

Every home should have a type A:B:C fire extinguisher that is checked and maintained on a regular basis. The National Fire Protection Agency (nfpa.org) recommends having an extinguisher on each floor of your home. The location of the extinguisher should be known to everyone in the house.

ASH DISPOSAL

Empty the ashes when they get 3" to 4" deep. Make sure that the fire is out - Never try to empty the ashes when the stove has an active or full fire, doing so will over heat the stove. Always wear gloves while handling hot ashes. The ashes may be removed by pulling out the ash drawer (if equipped) or scooping out the loading door of the stove. Leave 1" of ash in the bottom of the stove to help maintain a hot charcoal bed. Dump the ashes into a metal container with a tight-fitting lid and keep away from the house. **NEVER EMPTY ASHES INTO A COMBUSTIBLE CONTAINER SUCH AS A PLASTIC BUCKET OR PAPER BAG. NEVER LEAVE ASHES NEAR THE HOUSE OR GARAGE.** Before replacing the ash drawer, check to see if any ashes need to be removed from the ash pan plenum. If any ashes remain in the ash plenum it will prevent the ash pan from sliding all the way in and it may not seal, resulting in air entering the ash grate which will produce a runaway fire.

CHIMNEY INSPECTION AND CLEANING

Inspect the chimney regularly. Slow exhaust and a cool chimney can cause creosote to stick to the walls of the chimney. If creosote has accumulated the chimney must be cleaned immediately. We recommend having the chimney cleaned and inspected by a licensed, professional chimney sweep. Failure to remove creosote can result in a chimney fire which can damage both the chimney and the stove. If the chimney is damaged, it must be replaced.

GASKET INSPECTION AND REPLACEMENT

Inspect the gaskets around the door, glass and ash pan (if equipped) at least once a year. Check for areas that are frayed or missing. Press the gasket with your finger to see if the gasket is somewhat soft. Gaskets that are hard will not conform to the stove and may leak air. When the stove is cold, check to see if the glass moves up and down or left to right. If the glass moves, you may need to tighten the screws around the retaining ring or replace the gasket. Replacement gaskets and service are available through your local dealer or by visiting kumastoves.com.

GLASS CLEANING AND REPLACEMENT

Never clean the glass when it is hot. Your stove is equipped with an air wash system that will self-clean. Burn the stove on high for 20 to 30 minutes every time you add fuel to the fire. This will reduce the creosote on the glass. If needed, clean the glass with a soft cloth and stove glass cleaner. Do not use steel wool, sandpaper or abrasive cleaners. If you close the door on a piece of wood that is too long, you will break the glass. If the glass breaks in your stove, shut off the primary air control and let the fire burn out. Do not leave the stove unattended with a broken glass. To replace broken glass:

1. Carefully lift the door from the stove and place it on a clean soft work area.
2. Using a Phillips screw driver, remove the retaining ring screws and the retaining ring.
3. Carefully discard the broken glass. CAUTION: BROKEN GLASS WILL BE SHARP.
4. Clean the door and set the new piece of glass into the door so that the logo reads correctly from the front side of the door. Kuma replacement glass will have the gasket pre-installed.
5. Replace the retaining ring and screws. Be careful to tighten the screws evenly and tighten just enough to hold the glass firmly

SECONDARY BURN TUBE REPLACEMENT

The burn tubes are one of two burn systems that causes your stove to operate efficiently, this stove also uses a catalyst to clean some of the remaining smoke before it leaves the stove. If your burn tubes are not physically degraded (falling apart, crushed or excessively warped) then they are functioning and will not need replacement. To remove a burn tube, un-bolt the tube using a 7/16" wrench. Pull the tube to the right then down and out of the stove. Replace the tube and re-install the bolt the holds the tube in place.

CATALYST INSPECTION, CLEANING AND REPLACEMENT

The catalyst is one of two burn systems that causes your stove to operate efficiently, this stove also uses secondary burn tubes to re-burn smoke before it reaches the catalyst. To inspect your catalyst, unhook the flame deflector from the face of the baffle by lifting up and pulling forward. If your catalyst has not physically degraded (falling apart, crushed or excessively warped) then it is likely functioning and will not need replacement. If your Catalytic combustor becomes plugged with ash, clean the catalyst **in place** using a soft brush or for deeper cleaning use a slight to moderate (~20-30 psi.) amount of air pressure blowing any ash through the cells of the catalyst. To replace the catalyst:

1. Unhook the flame deflector from the face of the baffle by lifting up and pulling forward. Set aside.
2. Pull the catalyst out using the 2 handles that the flame deflector was hooked to. You may need to wiggle the catalyst to loosen the gasket material.
3. Remove any gasket material that was left in the baffle cavity.
4. Your new catalyst will be wrapped in a gasket material that is held in place with masking tape. Do not remove the tape
5. Slide the new catalyst into the cavity until it stops. If you see any significant gaps around the sides or top of the catalyst you will need to slide the catalyst out and wrap those areas with additional gasket material (you can use masking tape to hold it in place). The gasket provided will expand 2-3 times it's original thickness once heated to seal any minor gaps

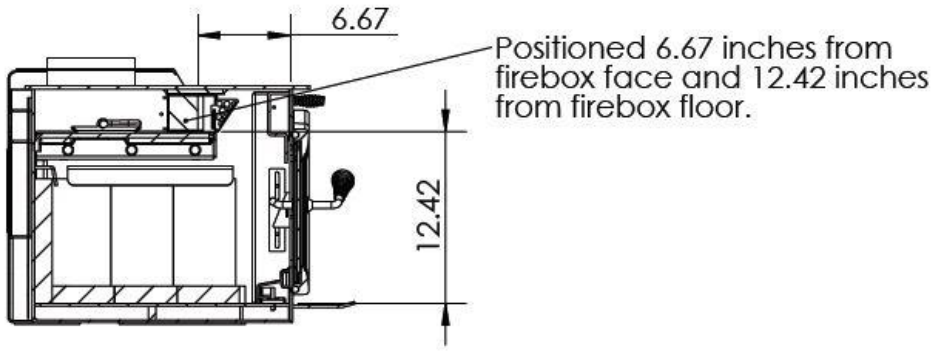

BRICK AND CERAMIC INSULATION REPLACEMENT

Bricks and ceramic insulation should be inspected at least once a year and replaced if necessary. Cracked bricks are fine as long as they remain in place. Bricks that are crumbling or falling out need to be replaced. The ceramic insulation is located on the top of the stove's baffle and is designed to keep heat in the stove and increase efficiency. As long as the insulation is in place it can be left alone. If the insulation becomes torn during cleaning, simply lay it back together tightly in that area. If the insulation tears to multiple pieces, it should be replaced. To replace the ceramic insulation, remove the 4 burn tubes allowing the entire baffle to come down and out of the stove. Mark or otherwise note the order of the tubes so they can be replaced in the same location. Lay the 2 smaller strips of insulation into the valleys of the corrugated baffle plate and lay the large piece over the entire baffle aligning the edges of the insulation with the edges of the baffle plate. Re-install the baffle and the 4 burn tubes.

MAINTENANCE PARTS LIST AND DIAGRAMS

TBD

SECTION 7 - TROUBLESHOOTING

STOVE BURNS LAZY AT START UP.

1. The chimney is still cool, allow more time to warm up.
2. Wood is not seasoned (still green). Wood should sit for about 1 year, split and loosely stacked if it was cut green.
3. Wood is well seasoned but has a lot of surface moisture. Your wood supply must be covered. Check your tarps or other covering to see that no rain or snow is getting to your wood. Wood should be covered on top, but open on the sides to allow air movement to aid in drying.
4. Stove is being shut down too soon. Leave the air open for longer. (do not leave the stove unattended with door open) See Section 4 for lighting instructions.

STOVE BACK-PUFFS OR SMOKES INTO THE ROOM AT START UP.

1. Chimney is cold. Cold chimneys can produce a "reverse draft" where cold air is rushing down the chimney into the stove. Open a door or a window for about 5 minutes to equalize pressure in the house then try restarting with small strips of newspaper. Using small strips of newspaper or an approved fast burning fire starter and small pieces of kindling will create heat faster to help reverse the cold air.
2. Chimney and/or the chimney cap needs to be cleaned. Your chimney should be checked and cleaned if necessary every few months. Even a small amount of buildup can cause a draft restriction, for example: ¼ inch of buildup on the side wall of an 8" chimney reduces the effective area of the chimney by about 20%. Pay close attention to the chimney cap, especially if it has a screen. Screened chimney caps can become blocked enough to restrict flow in just a few weeks.

STOVE SMOKES OUT THE DOOR WHEN IT IS OPEN.

1. The door was opened before the bypass rod was pulled open. Open the bypass for 1 minute before opening the door.
2. The door was opened too quickly. Crack the door open just a small amount and let the stove "breathe" a few seconds before opening all the way.
3. Chimney and/or the chimney cap needs to be cleaned. Your chimney should be checked and cleaned if necessary every few months. Even a small amount of buildup can cause a draft restriction, for example: ¼ inch of buildup on the side wall of a 6" chimney reduces the effective area of the chimney by about 20%. Pay close attention to the chimney cap, especially if it has a screen. Screened chimney caps can become blocked enough to restrict flow in just a few weeks.

STOVE WON'T SHUT DOWN.

1. Check the main door gasket and glass gasket for proper seal. See section 6 for instructions on checking your gaskets.

STOVE WON'T BURN HOT ENOUGH. LAZY BURN.

1. Wood is not seasoned (still green). Wood should sit for about 1 year, split and loosely stacked if it was cut green.
2. Wood is well seasoned but has a lot of surface moisture. Your wood supply must be covered. Check your tarps or other covering to see that no rain or snow is getting to your wood. Wood should be covered on top, but open on the sides to allow air movement to aid in drying.
3. Chimney and/or the chimney cap needs to be cleaned. Your chimney should be checked and cleaned if necessary every few months. Even a small amount of buildup can cause a draft restriction, for example:

¼ inch of buildup on the side wall of an 8" chimney reduces the effective area of the chimney by about 20%. Pay close attention to the chimney cap, especially if it has a screen. Screened chimney caps can become blocked enough to restrict flow in just a few weeks.

4. Catalytic combustor is plugged with ash. Clean the catalyst in place using a slight to moderate (~20-30 psi.) amount of air pressure blown through the baffle grid removing ash from the catalyst cells.
5. Atmospheric conditions. Occasionally, barometric episodes occur that affect draft, thereby affecting stove performance. If your stove has been working fine and performance drops suddenly, this is most likely the cause, and will usually go away within a few days.
6. Your fuel load may be too small or the wood size too large for the coal bed. A small bed of coals requires re-kindling to build up the heat, only put large chunks of wood on a very hot and active bed of coals.

BURN TIME TOO SHORT.

1. Your fuel load may be too small or the wood size too large for the coal bed. A small bed of coals requires re-kindling to build up the heat, only put large chunks of wood on a very hot and active bed of coals. If there are large chunks of charred wood left after the fire has gone out, the coal bed was not hot enough.
2. Fuel quality. Harder, denser woods produce longer burn times. Likewise, softer woods produce shorter burn times.
3. Check the main door gasket and glass gasket for proper seal. See for instructions on checking your gaskets.

CATALYST TROUBLESHOOTING.

Problem	Cause	Solution
Catalyst plugged with creosote	Burning wet wood or pushing in the bypass rod too soon.	Burn only dry, seasoned natural wood. Burn a hot fire with the bypass rod partially open to burn off the creosote buildup.
Catalyst masked with soot or fly ash.	Pushing in the bypass rod too soon. Burning improper material such as cardboard, coal or wrapping paper.	Burn a hot fire with the bypass rod partially open to burn off the creosote buildup. Burn only dry seasoned natural wood.
Lower Efficiency	Flames contacting the catalyst from excessive draft. Poisoning	Use less wood or lower the air to the stove. Install a damper to reduce draft. Do not burn material that will poison the catalyst such as colored paper, cardboard, paneling, painted or treated wood.
Catalyst is plugged with fly ash	Pushing in the bypass rod too soon. Burning material that produces fly ash and char. See section 4 for a list of improper materials	Make sure you achieve catalyst light off (see section 4) Burn only dry, seasoned natural wood. Vacuum or brush off the catalyst.

SECTION 8 - WARRANTY

Our Promise:

If any maintenance items wear out in the first three years, we will supply you with the parts to fix it. For as long as you own your stove, if you ever have a defect in the material or workmanship of your stove's firebox, we will repair or replace it for you. See full details below:

Items Covered	Parts Coverage Period	Labor Coverage Period
Maintenance Items: Bricks, gasket, ceramic insulation and paint.	3 Years	No Labor Coverage
Blowers, ash grate, brick supports, Baffle plate and burn tubes.	5 Years	3 Years
Stove firebox, legs, glass (thermal breakage) and door casting.	Forever	3 Years

Catalyst Warranty: The combustor supplied with this heater is an Applied Catalysts ACI-5M, Long Life Combustor. Following is the catalytic combustor warranty supplied with this wood heater. Catalyst warranty claims should be addressed to: Kuma Stoves 50145 N. Old Highway 95 Rathdrum ID, 83858. Ph. 888-714-5294. All warranty claims must meet the following conditions: 1. warranty has been registered proving the date of purchase. 2. You return the catalyst to Kuma stoves. 3. The catalyst has not been abused by over-firing or using unauthorized fuels. If the catalyst loses its structural integrity within 6 years of purchase, Kuma stoves will replace the catalyst at no charge. For the next 6 years, a replacement catalyst is available for purchase from Kuma Stoves at a 50% discount from MSRP. The above 3 conditions apply when qualifying for the discounted rate. All replacement catalysts will have a 90 day warranty coverage.

Warranty Coverage:

To ensure warranty coverage, it is very important that you register your Kuma Stove warranty within 30 days of purchase at kumastoves.com or fill out and return the warranty registration in your owner's packet. Operation of this stove in a manner inconsistent with the owner's manual, especially the burning of materials for which this unit is not certified by the EPA, will void the warranty. This warranty covers your new Kuma Stove from defects in material and workmanship for the period outlined in this warranty. Kuma Stoves reserves the right to replace, repair or authorize repair of any defective part at its sole discretion. This warranty is not transferrable and covers the original owner of the product from the time of purchase. All parts that have been replaced under this warranty will have a 90 day warranty coverage. The maximum value of this warranty is the original purchase price of the product. This warranty is subject to the conditions and limitations outlined below. This warranty covers stoves purchased from an authorized Kuma Stoves dealer.

Warranty Instructions:

Please contact the dealer where you purchased your stove. You may also contact Kuma stoves directly at 50145 N. Old Highway 95, Rathdrum ID 83858 or by phone at 1-888-714-5294 or contact us online at kumastoves.com. When calling, you will need to have your proof of purchase, the model name, and the serial number of your stove. When calling please remember that shipping and handling costs are not covered under this warranty.

Warranty Exclusions:

This Warranty does not cover: 1. Changes in the color of the surface of the stove as this naturally happens during the firing of the stove and is considered normal. 2. Damage to plating due to chemical cleaners, fingerprints, or scratching. 3. Shattered glass caused from wood impact. 4. Discoloration of plating or glass. 5. Expansion and contraction of the firebox causing noise. 6. Damage caused from: power surges, unauthorized modifications, using incorrect fuel and/or accelerants, shipping/handling, failure to follow the manufacturer's installation instructions, failure to follow any local building codes. 7. Damages to any product not manufactured by Kuma Stoves. 8. Any stoves ability to heat a specific area. Heating capacity is given as a guideline and is not guaranteed. 9. Shipping costs or travel time. Please talk with an authorized dealer or Kuma representative about the potential charges for travel or shipping. 10. This warranty is void in the case of abuse, over firing, unauthorized repair, alterations, improper installation and/or service.

Appendix B – Alt 125 Letter

UNITED STATES ENVIRONMENTAL PROTECTION AGENCY
RESEARCH TRIANGLE PARK, NC 27711

FEB 2 8 2018

OFFICE OF
AIR QUALITY PLANNING
AND STANDARDS

Mr. Justin White
Hearthstone QHPP, Inc.
#17 Stafford Ave.
Morrisville, VT 05661

Dear Mr. White,

I am writing in response to your letter dated January 12, 2018, regarding wood heaters manufactured by Hearthstone QHPP, Inc. (Hearthstone). This response, dated February 28, 2018, supercedes our previous response (dated February 26, 2018) to correct an inaccuracy regarding required changes to ASTM E3053-17.

You are requesting to use an alternative test method, using cord wood, as referenced in section 60.532(c) of 40 CFR part 60, Subpart AAA, Standards of Performance for New Residential Wood Heaters (Subpart AAA) to meet the 2020 cord wood alternative compliance option. The 2020 cord wood alternative compliance option states that each affected wood heater manufactured or sold at retail for use in the United States on or after May 15, 2020, must not discharge into the atmosphere any gases that contain particulate matter in excess of 2.5 g/hr. Compliance must be determined by a cord wood test method approved by the Administrator along with the procedures in 40 CFR 60.534. You have requested approval to use the procedures and specifications found in ASTM Method E3053-17, a cord wood test method titled, "Standard Test Method for Determining Particulate Matter Emissions from Wood Heaters using Cordwood Test Fuel," in conjunction with ASTM E2515-11 and Canadian Standards Administration (CSA) Method CSA-B415.1-10, which are specified in 40 CFR 60.534.

We understand that Hearthstone is also requesting that the alternative method proposed above be approved to apply broadly to all wood heaters manufactured by Hearthstone meeting the requirements of Subpart AAA, from the approval date of this request until such time that Subpart AAA is revised or replaced to require a different cord wood certification method, providing all requirements of section 60.533 of Subpart AAA are met.

With the caveats set forth below, we approve your alternative test method request for certifying wood heaters using ASTM E3053-17 in conjunction with section 60.534 of Subpart AAA to meet the 2020 cord wood compliance option until such time that Subpart AAA is revised or replaced to require a different cord wood certification method. We also approve application of this alternative method to all wood heaters manufactured by Hearthstone meeting the requirements of Subpart AAA.

As required in Subpart AAA, section 60.354(d), you or your approved test laboratory must also measure the first hour of particulate matter emissions for each test run using a separate filter in one of the two parallel sampling trains. These results must be reported separately and also included in the total particulate matter emissions per run. Also, as required by Subpart AAA, section 60.534(e), you must have your approved laboratory measure the efficiency, heat output, and carbon monoxide emissions of the tested wood heater using CSA-B415.1-10. For measurement of particulate matter emission concentrations, ASTM 2515-11 must be used.

The following change to ASTM E3053-17 must be followed:

1. Coal bed conditions prior to loading test fuel. The coal bed shall be a level plane without valleys or ridges for all test runs in the high, low, and medium burn rate categories.

The following changes to ASTM E2515-11 must be followed:

1. The filter temperature must be maintained between 80 and 90 degrees F during testing.

2. Filters must be weighed in pairs to reduce weighing error propagation; see ASTM 2515-11, Section 10.2.1 Analytical Procedure.

3. Sample filters must be Pall TX-40 or equivalent Teflon-coated glass fiber, and of 47 mm, 90 mm, 100 mm, or 110 mm in diameter.

4. Only one point is allowed outside the +/- 10 percent proportionality range per test run.

A copy of this letter must be included in each certification test report where this alternative test method is utilized.

It is reasonable that this alternative test method approval be broadly applicable to all wood heaters subject to the requirements of 40 CFR part 60, Subpart AAA. For this reason, we will post this letter as ALT-125 on our website at *http://www3.epa.gov/ttn/emc/approalt.html* for use by other interested parties. As noted earlier in this letter, this alternative method approval is valid until such time that Subpart AAA is revised or replaced to require a different cord wood certification method, and at such time, this alternative will be reconsidered and possibly withdrawn.

If you have additional questions regarding this approval, please contact Michael Toney of my staff at 919-541-5247 or toney.mike@epa.gov.

Sincerely,

Steffan M. Johnson, Group Leader
Measurement Technology Group

cc: Amanda Aldridge, EPA/OAQPS/OID
Adam Baumgart-Getz, EPA/OAQPS/OID
Rafael Sanchez, EPA/OECA
Michael Toney, EPA/OAQPS/AQAD

Appendix C – Firebox Volume

STAEDTLER® No. 937 811E Engineer's Computation Pad

Kuma Aspen LE 0123WM011E BDavis

Fire box Volume 2/25/19

H	W	D
9.5	18.25	17.25

$V_1 = 9.5 \times 18.25 \times 17.25 = 1.731$

1.731 ft^3

This rough drawing was done to confirm a more in depth drawing done by Myrow Consulting that calculated a 1.736 ft^3 box.

1.736 was used for all fuel calculations

BD

Side view

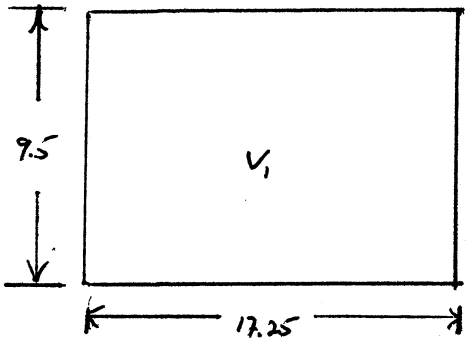

Front view

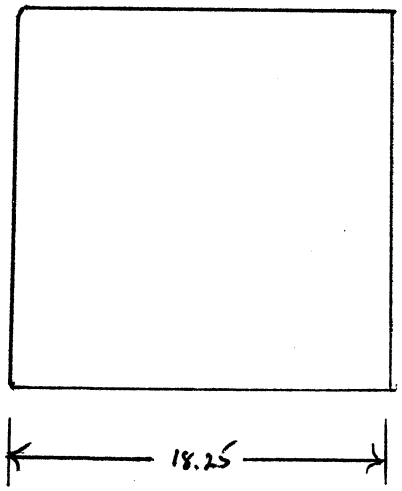

Kuma 180
12/7/18 ATM

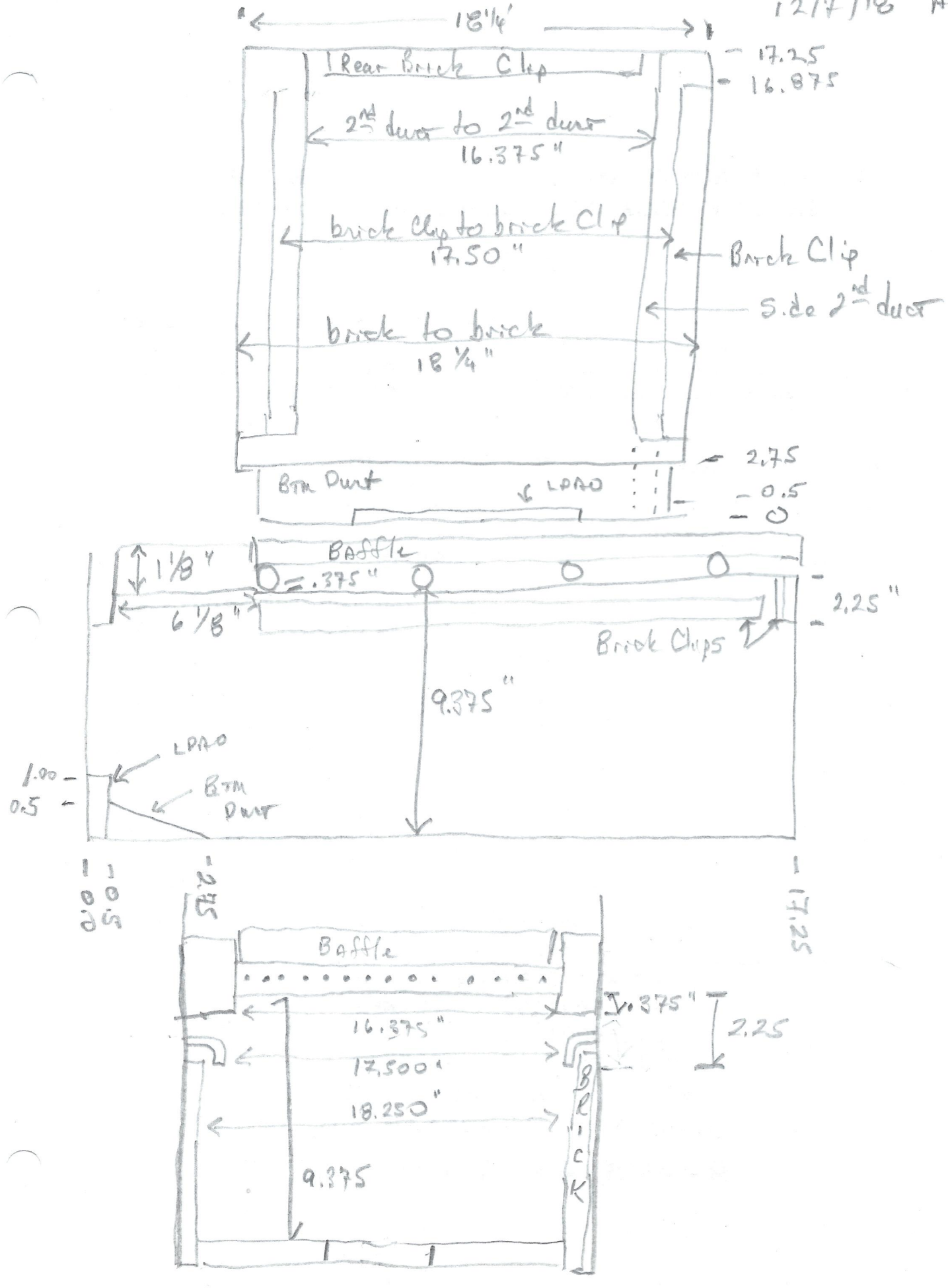

	width	Height	depth	
A	18.25	x 9.375	x (17.25 − 2.75) (14.5)	= 2480.859
B	18.00	x 9.375	x 2.75	= 464.063
C	18.25	x 1.125	x 6.125	= 125.754

3070.676 in³

− 71.261

2999.415

1.736 ft³

Less.

D LPAO

18 x 0.5 x 0.5 = 4.500

Btm Duct Primary

E. 18 x $\frac{((2.75-.5)\times 5}{2}$ = 10.125

~~1215~~

17.360 @ 10 lbs

920

16.4~~878~~

16.492

18.229

F. Rear Brick Clip

18.25 x 2.25 x .875 15.398

20.8293

G. Side Brick Clips

(18.25 − 17.5 x 2.25 x 17.25 29.109

19.7878

19.788

21.8707

21.870

H. 2nd air Side Ducts

(18.25 − 16.375) x .375 x 17.25 12.129

71.261

Fuel Price Length

18.25 x .8333 = 15.2077" = 15 3/16 = 15.1875"

Appendix D – Revision History

Date	Project No.	Tech. & Evaluator	Report Sect.	Summary of Changes
March 2019	0123WM011E	B. Davis	All	Original report
12/23/20	0123WM011E Edition 001	B Davis	Appendix C	Added firebox volume drawing
			Page 9	Added documentation of appropriateness/anomalies.
			Page 9	Added discussion of negative filter weights.
			Page 223	Revised example calculation pages
			Page 223	Revised example calculation pages showing burn rate calculations
			Page 7	Added table 8 showing train precision
4/13/21	0123WM011E Edition 002	B Davis	Page 10	Changed combustion air control setting from 5/16" to fully closed. 5/16" is the open area of the air control at the factory stop.
			Page 12	Changed combustion air control setting from 5/16" to fully closed. 5/16" is the open area of the air control at the factory stop.
			Appendix D	Added revision history table
			Page 3	Edited table of content to show revision history
6/30/21	0123WM011E Edition 003	B Davis	Preface	Updated cover and page numbering for new edition.
			2	Added foot note to conditioning data showing operation for 50 hours at a medium burn rate.
			Appendix C	Updated firebox volume drawings on page 273 and 274.
7/1/21	0123WM011E Edition 004	B Davis	Cover	Updated for new edition
			Appendix A	Updated manual to show recommended fuel length of 16" on page 252, this is consistent with nominal fuel length shown in ASTM E3053 clause 8.4.2.8.