Non-Confidential Business Information (Non-CBI)

Certification Test Report

Manufacturer: Kuma Stoves, Inc.
Heater Type: Wood-Fired Room Heater (Freestanding/Insert, Catalytic)

K -181 Series
Models: Aspen LE-1, Tamarack LE-1, Aberdeen LE-1, Alpine LE-1

Prepared for:
Kuma Stoves, Inc.
50145 N Old Hwy 95
Rathdrum ID 83858
USA

Prepared by:
OMNI-Test Laboratories, Inc.
13327 NE Airport Way
Portland, OR 97230
(503) 643-3788

Test Period: December 12, 2022 – December 19, 2022

Report Issued: January 12, 2023
Report Revision Date: July 27, 2023

Report Number: 0123WM013E
Project Number: 0123WM013E

All data and information contained in this report are confidential and proprietary to Kuma Stoves, Inc. Its significance is subject to the adequacy and representative character of the samples and to the comprehensiveness of the tests, examinations, or surveys made. The contents of this report cannot be copied or quoted, except in full, without specific, written authorization from Kuma Stoves, Inc. and OMNI-Test Laboratories, Inc. No use of the OMNI-Test Laboratories, Inc. name, logo, or registered mark (O-TL) is permitted, except as expressly authorized by OMNI-Test Laboratories, Inc. in writing.

AUTHORIZED SIGNATORIES

This report has been reviewed and approved by the following authorized signatories:

Technician:



Riley Tiegs, Technician
OMNI-Test Laboratories, Inc.

Evaluator:

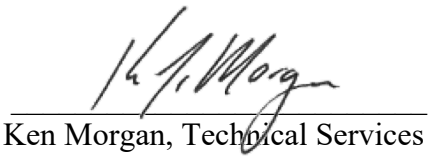

Ken Morgan, Technical Services Director
OMNI-Test Laboratories, Inc

TABLE OF CONTENTS

PREFACE .....(3 pages)

1. APPLIANCE, TESTING AND RESULTS 4
Introduction 5
Appliance Description 5
Test Procedures 6
Summary of Results 6

Summary Tables
Table 1 - Particulate Emissions Results 8
Table 2 - Particulate Emissions Results (First Hour) 8
Table 3 – B415.1 Efficiency and CO Emissions 9
Table 4 - Test Facility Conditions 9
Table 5 – Fuel Measurement and Crib Description Summary Pretest 9
Table 6 - Fuel Measurement and Crib Description Summary Test 10
Table 7 - Dilution Tunnel Gas Measurements and Sampling Data 10
Table 8 - Average Temperature Data 10
Table 9 - Pretest Configuration 11
Table 10 - Test Configurations 11

Photographs 13
Example Dilution Tunnel 20

2. TEST DATA BY RUN 21
Manufacturer's Written Instructions 22
Conditioning Data 27
Run 1 43
Run 2 64
Run 3 93
Run 4 124
Run 5 148

3. QUALITY ASSURANCE/QUALITY CONTROL 175
Sample Analysis 177
Calibrations – ASTM E2515, ASTM E2780 190
Example Calculations 211

4. LABELING & OWNER'S MANUAL 227

Appendix A Firebox Volume 269
Appendix B Revision History 274

Section 1

APPLIANCE, TESTING AND RESULTS

Introduction

Kuma Stove, Inc. retained OMNI to perform U.S. Environmental Protection Agency (EPA) certification testing on the Aspen LE-1 wood stove as part of the K-181 Series. The unit is a Catalytic-type room heater. The firebox is constructed of mild steel. Usable firebox volume was measured to be 1.731 cubic feet and the stove is vented through 6" flue collar located on the stove top.

Testing was performed at OMNI-Test Laboratories located in Portland Oregon. The altitude of the laboratory is 30 feet above sea level. The unit was received in good condition and logged in on December 7, 2022, then assigned and labeled with OMNI ID #2461. The catalyst combustor was conditioned for 50 hours at a medium burn rate at Myren Consulting in Colville, WA. OMNI representative Tony Tong conducted the certification testing and completed all testing by December 19, 2022.

This report is organized in accordance with the EPA-recommended outline and is summarized in the Table of Contents immediately preceding this section. The results in this report are limited to the item submitted.

Appliance Description

The Kuma 181 series is a four stove model line that contains both a freestanding and insert type appliance. Four models contained in the Kuma 181 Series include Aspen LE-1, Tamarack LE-1, Aberdeen LE-1 and Alpine LE-1. All models share a common firebox, air control system, combustor, and flue exit. Each model has a loading door with a large glass viewing window. An optional 125 cfm blower (KA-BL-05) is offered by the manufacturer for the freestanding models, and an optional 70 cfm blower (KA-BL-03) is offered by the manufacturer for the fireplace insert (The testing was performed with 125 cfm blower). all four models are identical with respect to items that could affect emissions performance, the only differences between them are cosmetics in nature.

Combustion air enters through an intake, varied in area by a manually controlled linear actuator (hereinafter described as "primary air control" or "air control"). At minimum setting (hereinafter described as either "stop position" or "closed"), the air intake area is 0.37 in^2, and at maximum setting (hereinafter described as "fully open") the air intake area is 6.97 in^2. Air travels from the intake to a variety of primary and secondary combustion air ports within the firebox. Primary air enters through an air wash above the loading door and three pilot orifices at the lower front of the firebox. Secondary air enters through three secondary tubes located at the top of the firebox under the baffle. After travelling around the baffle, combustion products exit the firebox through a 6" flue collar located at the top of the unit.

The unit features a 13" x 2.5" x 2 1/8" thick metal catalytic combustor (SKU# KR-CT-01) to control emissions. It is located above the baffle and combustion products are routed through it when the bypass (controlled by a handle at the upper right of the unit) is closed. Its temperature is monitored by a probe located within 1" from the rear of the combustor.

The glass panel is constructed of 5mm ceramic glass and is 14" x 9 3/8" with a rounded top. The firebox is insulated with 1.25" thick firebrick and ½" thick ceramic insulation on the baffle plate.

More detailed information is shown in the manufacturer's design drawings of this report. This information is considered confidential business information (CBI) by the manufacturer and is not included in the non-CBI version of this report.

Test Procedures

The Aspen LE-1 wood stove was tested in accordance with the U.S. EPA 40 CFR Part 60, Subpart AAA – Standards of Performance for New Residential Wood Heaters using ASTM E2515 and ASTM E2780. The fuel used for certification testing was air dried Douglas Fir dimensional lumber meeting the specifications of ASTM E2780. Particulate emissions were measured using sampling trains consisting of two Glass Fiber 47mm filters (front and back).

The unit was tested for thermal efficiency and carbon monoxide (CO) emissions in accordance with CSA B415.1-10
Efficiency results were calculated using spread sheet Version 2.4 created 04/15/2010 and distributed by CSA. Example calculations for CSA B415.1 were not provided by CSA; spreadsheet is protected from modifications by means of a password.

Summary of Results

The weighted average emissions of the four test runs included in the results indicate a particulate emission rate of 1.08 grams per hour. Testing on the Kuma 181 wood stove consisted of 5 certification tests with four (Run 1, Run 2, Run 3 and Run 4) being used for a weighted average. Since the unit could not be operated at burn rate below 0.8 kg/hr with the primary air control all the way pushed to the stop position, two test runs (Run 2 and Run 3) were conducted at medium low burn rate of Category II in compliance with Method 28 – Certification and Auditing of Wood Heaters. Run 5 was conducted without unit blower operating at the burn rate of medium low Category II as a fan confirmation test to meet the requirement of ASTM E22780. Emissions rate 0.69 g/h from this test run is less than that of test Run 3 or Run 2 with blower operating. The Kuma 181 test results are within the emission limit of 2.0 g/hr for affected appliances manufactured after May 15, 2020.

The proportionality results for 5 test runs were acceptable. Quality check results for each test run are presented in Section 3 of this report.

Individual Run Summary

Run 1 - Test procedures were followed to produce Category IV burn at a burn rate of 2.18 kg/hr with the primary air control set to fully open. Sampling was conducted in accordance with ASTM E2515. Negative filter weights were found on train A (post first hour), this was caused by filter material transferring to the O-ring gasket. Transfer weight can be seen as a positive weight on the O-rings. Negative filter is added back into the calculation to prevent transfer weight as being counted as emissions. No additional sampling anomalies occurred, this test run was determined to be valid and appropriate for inclusion in the weighted average.

Run 2* - Test procedures were followed to produce a low burn rate with the primary air fully closed. Observed burn rate was calculated at 0.91 kg/hr (Category II). Negative filter weights were found on train A (first hour and post first hour), this was caused by filter material transferring to the O-ring gasket. Transfer weight can be seen as a positive weight on the O-rings, negative filter is added back into the calculation to prevent transfer weight as being counted as emissions. No additional sampling anomalies occurred, this test run was determined to be valid and appropriate for inclusion in the weighted average.

Run 3* - Test procedures were followed to produce a low burn rate with the primary air fully closed. Observed burn rate was calculated at 0.83 kg/hr (Category II). Negative filter weights were found on train A (first hour and post first hour), this is caused by filter material transferring to the O-ring gasket. Transfer weight can be seen as a positive weight on the O-rings, negative filter is added back into the calculation to prevent transfer weight as being counted as emissions. No additional sampling anomalies occurred, this test run was determined to be valid and appropriate for inclusion in the weighted average.

Run 4 - Test procedures were followed to produce a medium high burn Category III at a burn rate of 1.51 kg/hr with the primary air control set to 0.56" from the stop position. Negative filter weights were found on train A (first hour and post first hour), this is caused by filter material transferring to the O-ring gasket. Transfer weight can be seen as a positive weight on the O-rings, negative filter is added back into the calculation to prevent transfer weight as being counted as emissions. No additional sampling anomalies occurred. The test was determined to be valid and appropriate in inclusion of the weighted average.

Run 5 - Test procedures were followed to produce a medium low burn Category II at 1.11 kg/hr with the primary air control set to 1/8" from the stop position. This test run was conducted without the blower operating to compare the emission rate to that from the medium burn test with blow operating to determine if the unit has the same average emission rate with or without the blower operating. Negative filter weights were found on train A (first hour and post first hour), this is caused by filter material transferring to the O-ring gasket. Transfer weight can be seen as a positive weight on the O-rings, negative filter is added back into the calculation to prevent transfer weight as being counted as emissions. No additional sampling anomalies occurred. This test run was determined to be valid and appropriate. This fan confirmation test is not included in the weighted averages for the emissions and efficiencies.

**Runs 2 and 3 were attempts at a Category I low burn with the primary air control adjusted to it's fully closed position (to its factory stop), the results of which demonstrated and satisfied the alternate burn-rate provision in clause 8.1.1.3 of EPA method 28.*

Table 1 – Particulate Emissions

Run	**Burn Rate** (kg/h dry)	**Emissions** (g/h) Corrected[1]	**Emissions** (g/h) Uncorrected[2]
1	2.18	1.11	1.29
2	0.91	0.93	1.00
3	0.83	1.13	1.20
4	1.51	1.18	1.34
5	1.11	0.69	0.73
Weighted particulate emission average of 4 test runs (Run 1 - Run 4): 1.08 g/h			

[1]Corrected refers to gravimetric analysis that takes negative filter weights as a negative value in cases where filter residue was transferred to (stuck to) O-ring gaskets to account for the mass transfer.

[2]Uncorrected refers to gravimetric analysis where negative filter weights are taken as zero, thus reporting a higher value by overreporting of transferred filter material. The uncorrected values were added to this report in response to a request by the US EPA.

Table 2 – Particulate Emissions (First Hour)

Run	**ASTM E2515 Emissions – First Hour (g/h)** Corrected[1]	**ASTM E2515 Emissions – First Hour (g/h)** Uncorrected[2]
1	2.31	2.31
2	2.02	2.14
3	1.79	1.92
4	2.99	3.64
5	2.17	2.43

[1]Corrected refers to gravimetric analysis that takes negative filter weights as a negative value in cases where filter residue was transferred to (stuck to) O-ring gaskets to account for the mass transfer.

[2]Uncorrected refers to gravimetric analysis where negative filter weights are taken as zero, thus reporting a higher value by overreporting of transferred filter material. The uncorrected values were added to this report in response to a request by the US EPA.

Table 3 – B415.1 Efficiency and CO Emissions

Run	Heat Output (BTU/h)	HHV Efficiency (%)	LHV Efficiency (%)	CO Emissions (g/MJ Output)	CO Emissions (g/kg Dry Fuel)	CO Emissions (g/min)
1	29,153	71.3	77.0	2.00	28.25	1.02
2	13,670	79.7	86.1	1.19	18.84	0.29
3	12,764	81.6	88.2	0.50	8.07	0.11
4	21,944	77.5	83.8	1.02	15.60	0.39
5	15,990	76.8	83.0	1.73	26.33	0.49
Weighted average HHV efficiency of four test runs (Run 1-Run4): = **78.0%**						
Average CO Emissions of four tests (Run 1-Run4): = **0.45 g/min**						

Note: Results for run 5 are not used on the weighted average, run 5 results are only for fan confirmation comparison.

Table 4 – Test Facility Conditions

Run	Room Temperature (°F)		Barometric Pressure (Hg)		Air Velocity (ft/min)	
	Before	After	Before	After	Before	After
1	70	66	30.07	30.09	<50	<50
2	70	67	30.27	30.27	<50	<50
3	69	68	30.39	30.40	<50	<50
4	68	68	30.45	30.41	<50	<50
5	68	65	30.27	30.27	<50	<50

Table 5 – Fuel Measurement and Description Summary – PRETEST
Douglas Fir Dimensional Lumber

Run	**Pretest Fuel Weight** (lbs)	**Fuel Moisture** (Dry basis - %)	**Coal Bed Weight** (lbs)
1	9.6	20.81	2.6
2	9.5	21.19	2.3
3	9.7	22.26	2.3
4	9.6	21.26	2.3
5	9.6	21.90	2.4

Table 6 – Fuel Measurement and Crib Description Summary – TEST
Douglas Fir Dimensional Lumber

Run	**Test Fuel Wet Basis** (lbs)	**Firebox Volume** (ft^3)	**Loading Density Wet Basis** (lbs/ft^3)	**Test Fuel Dry Basis** (lbs)	**Length** (in)	**2x4s Used**	**4x4s Used**
1	12.8	1.731	7.39	10.5	15.25	2	2
2	11.3	1.731	6.53	9.4	15.25	2	2
3	11.3	1.731	6.53	9.3	15.25	2	2
4	11.6	1.731	6.70	9.7	15.25	2	2
5	11.5	1.731	6.64	9.6	15.25	2	2

Table 7 – Dilution Tunnel Gas Measurements and Sampling Data Summary

Run	**Length of Test** (min)	**Average Dilution Tunnel Gas Measurements**		
		Velocity (ft/sec)	**Flow Rate** (dscf/min)	**Temperature** (°F)
1	131	18.83	204.26	104
2	279	17.89	204.12	80
3	305	18.00	205.48	82
4	175	18.53	208.78	89
5	235	18.17	204.67	87

Table 8 - Average Temperature Data

Run	**Beginning Surface Temperature Average**[a]	**Ending Surface Temperature Average**[a]	**Surface Delta T**[b]
1	458	383	75
2	388	367	21
3	390	303	87
4	381	382	1
5	440	396	44

[a] All temperatures are in degrees F.

[b] Represents the difference between beginning and ending average surface temperatures.

Table 9 – Pretest Configuration

Run	Combustion Air	Fuel Added	Fuel Added	Time (min)
1	Fully Open	N/A	N/A	60
2	Fully Closed	N/A	N/A	73
3	Fully Closed	N/A	N/A	79
4	0.56” Open from closed	N/A	N/A	60
5	0.125” Open from closed	N/A	N/A	64

Note: The factory engineered stop position has been designed into the Kuma-181 to prevent the adjustable air from being closed further than the minimum setting.

Table 10 – Test Configurations

Run	Startup Procedures	Combustion Air
1	Bypass: Open for 60 seconds then closed when fuel loaded Fuel Loading: Fuel Loading was completed by 60 seconds. Door: Fuel door was open to load fuel, then closed at 90 seconds. Primary Air: Air control fully open for entire test. Secondary: No user control for secondary air. Fan: Fan off for first 5 minutes then set to high	Fully Open
2	Bypass: Open then closed when door closed Fuel Loading: Fuel loading was completed by 60 seconds. Door: Fuel door was open to load fuel, then closed at 70 seconds. Primary Air: Air control fully open for the first 5 minutes then set to stop position. Secondary: No user control for secondary air. Fan: Fan off for first 30 minutes then set to low.	Fully Closed
3	Bypass: Closed once fuel loaded Fuel Loading: Fuel loading was completed by 60 seconds. Door: Fuel door was open to load fuel, then closed at 90 seconds. Primary Air: Air fully open for first 5 minutes, then set to stop position. Secondary: No user control for secondary air. Fan: Fan off for first 30 minutes then set to low	Fully Closed
4	Bypass: Closed once fuel loaded Fuel Loading: Fuel loading was completed by 60 seconds. Door: Fuel door was opened to load fuel, then closed at 90 seconds. Primary Air: Fully Open for 5 minutes then set to 0.56” from closed. Secondary: No user control for secondary air. Fan: Fan off for first 5 minutes then set to high	0.56” from Fully Closed
5	Bypass: Closed once fuel loaded Fuel Loading: Fuel loading was completed by 60 seconds. Door: Fuel door was closed at 80 seconds Primary Air: Fully Open for first 4 minutes then set to 0.125” from closed. Secondary: No user control for secondary air.	0.125” From Fully Closed

Note: The factory engineered stop position has been designed into the Kuma-181 to prevent the adjustable air from being closed further than the minimum setting.

EPA Weighted Average Emissions
EPA Method 28

Client:	Kuma Stoves, Inc.	Status:	Preliminary
Stove Model:	K-181 Series	Stove Type:	Catalytic Stove
Test Dates:	12/12/22 - 12/19/22		
Project Number:	0123WM013E		
Tracking Number:	2164		

Weighted Averages	**Emissions (g/hr):**	**1.1**
	HHV Efficeincy (%):	**78.0**
	LHV Efficeincy (%):	**84.3**

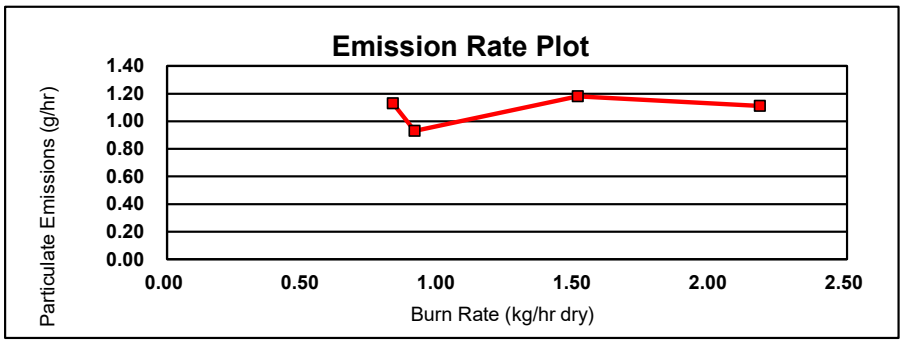

Run #	3	
Burn Rate (dry kg/hr)	0.83	
Category	2	
LHV Efficiency (%)	88.2	
HHV Efficiency (%)	81.6	
Emissions (g/hr)	1.13	
Weighting Factor	0.306	18.04%

Run #	2	
Burn Rate (dry kg/hr)	0.91	
Category	2	
LHV Efficiency (%)	86.1	
HHV Efficiency (%)	79.7	
Emissions (g/hr)	0.93	
Weighting Factor	0.515	30.43%

Run #	4	
Burn Rate (dry kg/hr)	1.51	
Category	3	
LHV Efficiency (%)	83.8	
HHV Efficiency (%)	77.5	
Emissions (g/hr)	1.18	
Weighting Factor	0.629	37.12%

Run #	1	
Burn Rate (dry kg/hr)	2.18	
Category	4	
LHV Efficiency (%)	77	
HHV Efficiency (%)	71.3	
Emissions (g/hr)	1.11	
Weighting Factor	0.244	14.42%

Photographs

Kuma Stoves, Inc.
Kuma-181
Test Dates: December 12, 2022 – December 19, 2022



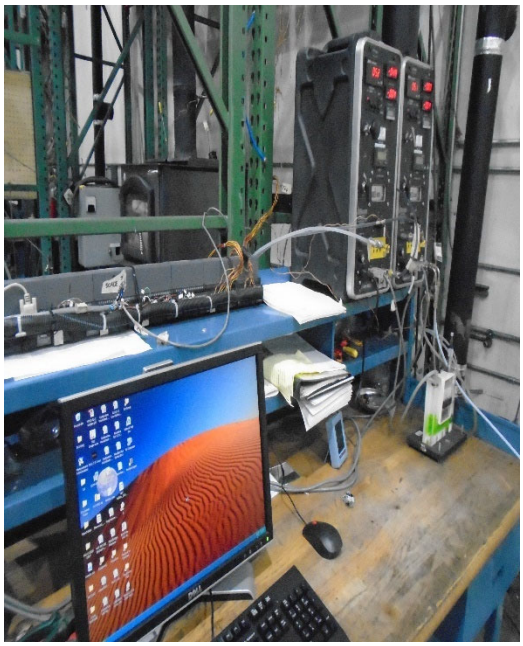





Kuma Stoves, Inc.
Kuma - 181
Run 1 – Run 5

Run 1 – Preburn



Run 1 – Fuel Load



Run 1 – Fuel Loaded



Run 1 – Remaining Coal Bed



Run 2 – Preburn Fuel



Run 2 – Preburn Loaded



Run 2 – Fuel Load



Run 2 – Fuel loaded



Run 3 – Prebnrn Fuel

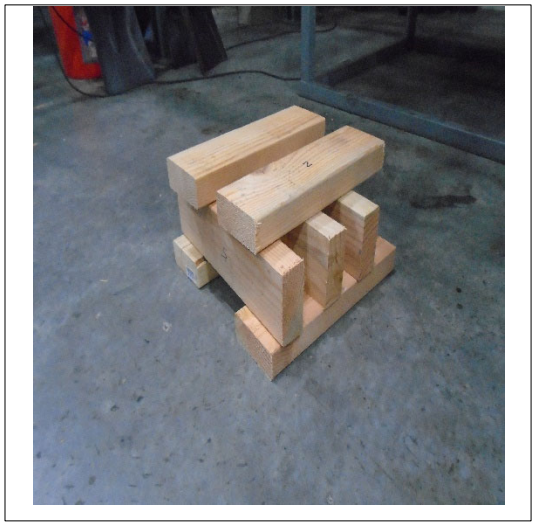

Run 3 – Preburn Fuel Loaded



Run 3 - Fuel Load



Run 3 – Fuel Loaded



Run 4 – Preburn Fuel Loaded



Run 4 – Fuel Load

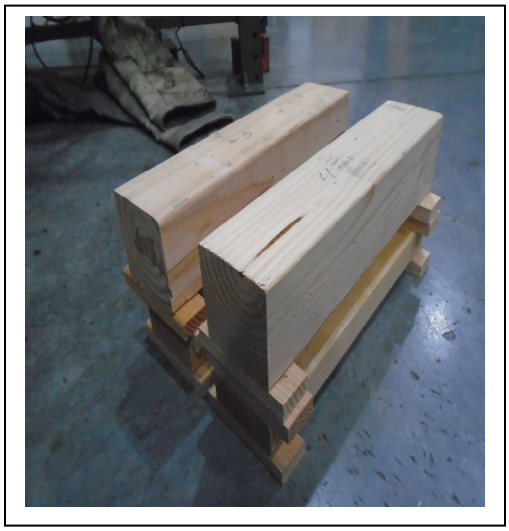

Run 4 – Fuel Loaded



Run 4 – Remaining Coal



Run 5 – Preburn Fuel Loaded



Run 5 – Fuel Load

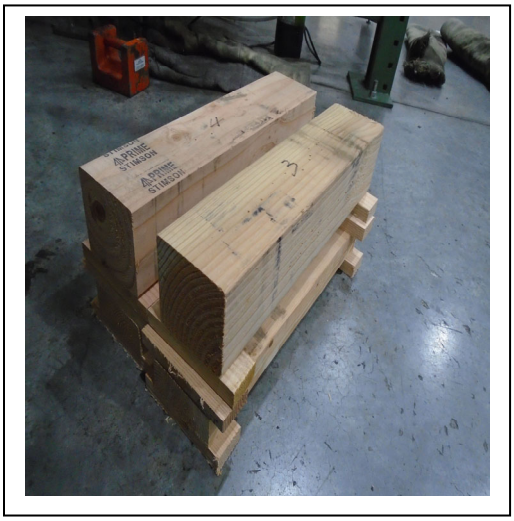

Run 5 – Test Fuel Loaded



Run 5 – Remaining Coal After Test



Banded / Sealed Stove









Example of ASTM E2515-11 Dilution Tunnel

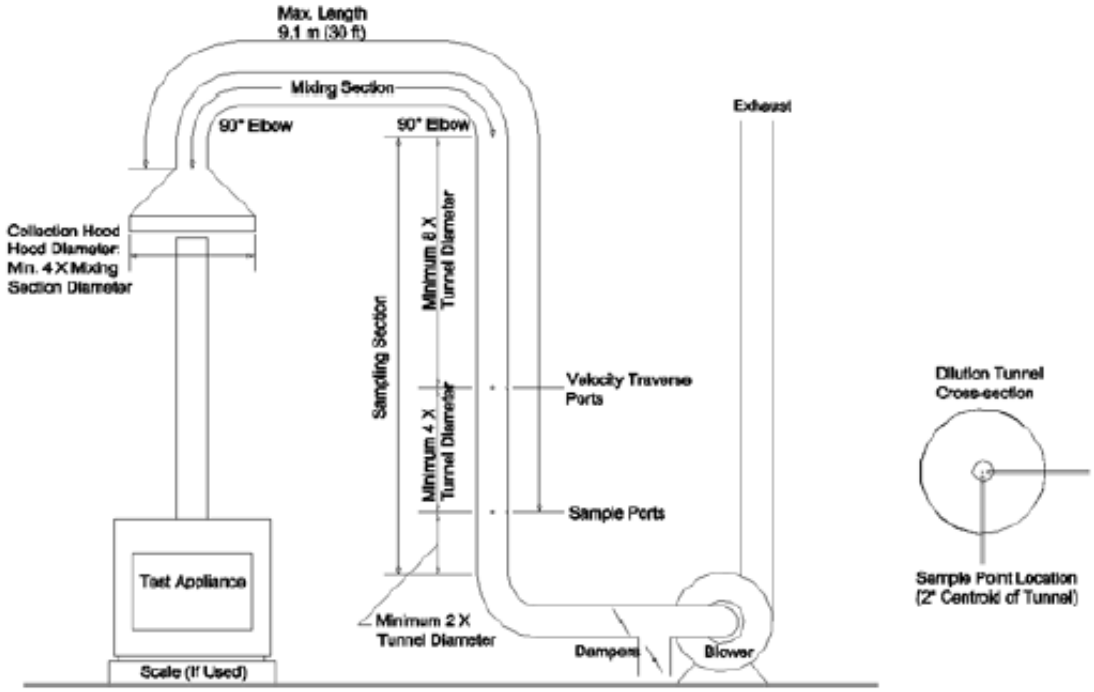

Prior to testing, sample point and travers point locations are verified to ensure placement is within specifications. Collection hood, tunnel diameter, and mixing section length are also verified to be within specifications.

Section 2

TEST DATA BY RUN

Manufacturer's Written Instructions

OPERATING INSTRUCTIONS FOR THE KUMA 181 SERIES

The operating instructions for the KUMA 181 series catalytic stoves are as follows:

Primary Air Control:

To increase the amount of primary combustion air entering the stove, pull the control rod at bottom right side of the stove out, away from the stove. To decrease the amount of combustion air entering the stove, push the rod into the stove. Set the primary air control as follows to achieve the desired Burn Categories.

Burn Category/ Primary Air Control:

Category 1 (Low): Push the primary air control all the way to the stop position.

Category 2 (M Low): Set the Primary Air Control at 1/8″ to 1/4" from the stop position.

Category 3 (M Hi): Set the primary air control at 3/8″ to 3/4″ from the stop position.

Category 4 (Hi): Set the primary air control to fully open.

Fan Confirmation Test (FCT)(M Low): Set the primary air control at 1/8″ to 1/4" from the stop position.

Note: The dry burn rate (BDR) at wide open may be <1.9 kg/h. Thus, it is recommended that the high burn test be done first, so that if the DBR for the first attempt at a High is <1.9 kg/h, then the requirement for a Category 3 test has been met and there will not be a need to run a test at the Category 3 setting. If the second attempt at a Hi is also <1.9 kg/h, so be it.

Fan Operation:

Category 1: on Low @ 30 minutes – marked on the control rheostat.

Category 2: on High @ 30 minutes

Categories 3 and 4: on High @ 5 minutes

Door: As soon as the fuel load has been loaded into the firebox, close the door to about 0.5 to 1.0″ open until the fire ignites. Monitor and adjust the door opening to maximize air flow into the firebox and enhance ignition by watching the coals in the firebox. Brighter coals indicate better air flow. Close the door once ignition is well established, typically no more than 30 seconds after ignition occurs. If the amount of fire decreases dramatically or goes out when the door is closed, reopen the door immediately to reignite or reestablish the fire the fuel load.

Lower Primary Air Orifice (LPAO): Always clear the coals away from in front of the center LPAO back about 2″ into the firebox from the rear edge of the primary air bottom cross duct.

SET-UP INSTRUCTIONS FOR THE KUMA 181 SERIES TEST RUNS

Burn	Low	M Low	M Hi	Hi	
Kindling (finely split)	~4.0 lbs.	~ 4.0 lbs.	~4.0 lbs.	~4.0 lbs.	Load all the Kindling & 1st rick in the stove before
1st Rick	8-12" 2x4's 9-12 lbs.	8-12" 2x4's 9-12 lbs.	8-12" 2x4's 9-12 lbs.	8-12' 2X4's 9-12 lbs.	igniting with propane torch Leave door cracked open for Start
Burn 1st rick until no yellow flames are in firebox, i.e., all is charcoal					
Add 2nd Rick	8-12" 2x4's 9-12 lbs.	8-12" 2x4's 9-12 lbs.	8-12" 2x4's 9-12 lbs.	8-12' 2X4's 9-12 lbs.	
Burn 2nd rick until no yellow flames are in firebox, i.e., all is charcoal					
Scoop all hot burning coals out of the stove. Record dry, empty stove weight.					
Put the following amount of Hot coals back in stove for each test run					
	1.5 lbs.	1.5 lbs.	1.5 lbs.	2.0 lbs.	
Add 3rd rick	9.40-9.50 lbs.	9.40-9.50 lbs.	9.40-9.50 lbs.	9.40-9.50 lbs.	DO NOT DEVIATE!
Pre Burn	Adjust PAC To run Setting 2.0 Lbs. above Upper coal Bed Wt.	Adjust PAC to run Setting 2.0 lbs. above Upper coal Bed Wt.	Adjust PAC to run Setting 3.5 lbs. above Upper coal Bed Wt.	Start Preburn as soon as door and bypass are closed, turn fan onto Hi and start Preburn	

<u>You must load the stove at the bottom end of the coal bed and REALLY breakdown, pack and flatten the coals, especially for the rear two stacks for the fuel load to fit in the stove under the baffle. To get the fuel to fit you will have to nestle (wiggle side to side) pcs. 1 and 3 (2x4's) into the coal bed to be able to load pcs 2 & 4 (4x4's) on top of 1 & 3.</u>

Lbs. of Coals @ Test Start	2.7-2.8	2.7-2.8	2.7-2.8	2.7-2.8	
Est. Preburn Time (min)	~70	~70	~60-70	60-70	Delta T is more important than time
Delta T @ Test Start	385-390F	395-405F	405-420F	Start test at 1 h no matter what Delta T is	

Ricks for Kuma 180 Series

All 8-12" 2x4 D. Fir

For Rick #1 put kindling under and on top of 2x4's

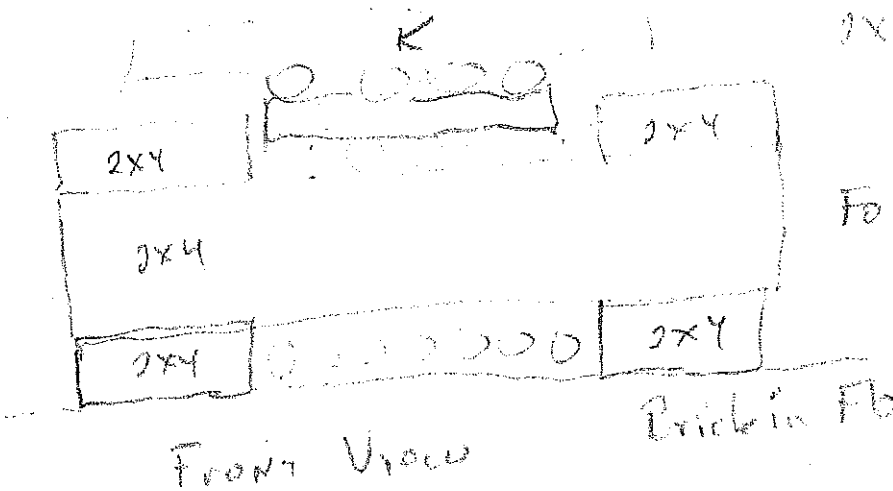

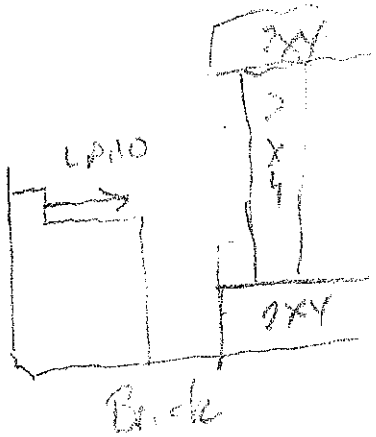

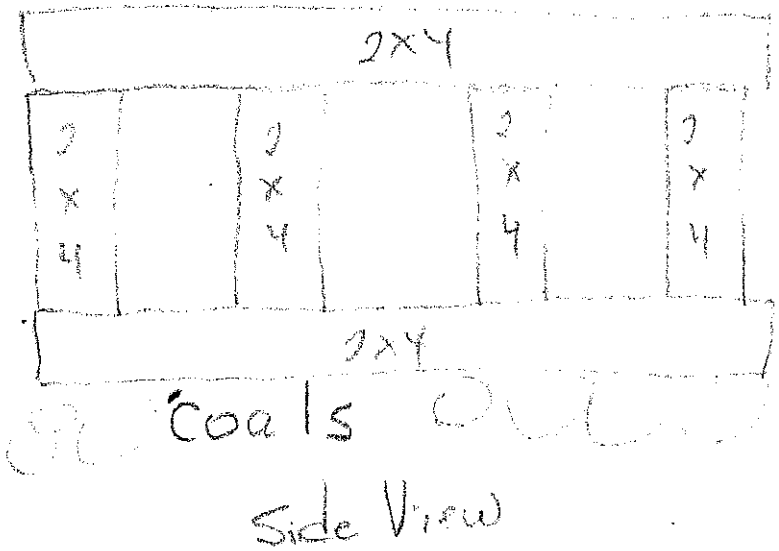

Ricks #2 & 3 put on top of Hot Coals

U.S. Environmental Protection Agency
Applicability Determination Index

Control Number: WDS-41

Category: Woodstoves
EPA Office: SSCD
Date: 08/05/1987
Title: Additional Testing-Catalyst Use
Recipient: Edgar, Glen
Author: Seitz, John S.
Comments: revised 10-19-92

Subparts: Part 60, AAA, New Residential Wood Heaters

References: Method 28A

Abstract:

See below. Determination available in abstract form only. Included under "Letter" field to facilitate database word searching.

Letter:

Control Number: WDS-41

"A. A catalytic stove began certification testing, but was withdrawn by the manufacturer because of high emissions. The manufacturer has made some changes to the stove and wants to re-test it. Can the same catalyst be used? If so, must it be pre-conditioned again? B. A stove has undergone certification testing. Additional testing must be performed on the same stove. May a new catalyst which has been aged be used on the stove undergoing additional testing?"

"A. The same catalyst may be used. Provided the manufacturer has good records of the first preconditioning, it does not have to be preconditioned again. B. A new catalyst may not be used on the stove undergoing additional testing. Any stove which requires additional testing after a valid certification test series has been conducted on it, must use the same catalyst as was originally installed. Revised 10-19-92"

Kuma's Interpretation: Since this determination allows for a pre-conditioned catalyst to be removed and re-installed into a new test stove without having to be pre-conditioned again, we conclude that a pre-conditioned catalyst may be removed for safe transport and re-installed into the same stove after it has been set up at a new testing location.

Conditioning Data

Aggregated (Lab Notes included)

Conducted by Ben Myren in Colville WA at Medium Burn Rate

K-181 Stove Aging			Technician: Ben Myren
			Conditioning Dates: 7/26/2021- 8/19/2021
Elapsed Time (hours)	Flue Gas Temp (°F)	Catalyst Exit Temp (°F)	Notes (time weight and moisture content for fuel loading):
1	482	1098	7/26/2021 14:22 - Fuel 17.4 lbs. of untreated wood, 17.1% moisture (wet basis). Air control set to 1" to produce a medium burn rate.
2	367	954	
3	324	849	
4	297	734	
5	265	613	
6	354	863	7/26/2021 19:22 - Fuel 17.5 lbs. of untreated wood, 17.6% moisture (wet basis). Air control set to .75" to produce a medium burn rate.
7	296	857	
8	338	916	
9	317	875	
10	299	816	
11	244	616	
12	226	573	
13	387	1078	8/2//2021 15:50 - Fuel 14.9 lbs. of untreated wood, 17.7% moisture (wet basis). Air control set to .75" to produce a medium burn rate.
14	325	845	
15	272	722	
16	251	656	
17	309	902	8/2//2021 19:50 - Fuel 14.7 lbs. of untreated wood, 16.5% moisture (wet basis). Air control set to .75" to produce a medium burn rate.
18	294	1013	
19	323	1186	
20	198	705	
21	245	868	8/4//2021 14:46 - Fuel 11.7 lbs. of untreated wood, 17.8% moisture (wet basis). Air control set to .75" to produce a medium burn rate.
22	301	935	
23	272	851	8/4/2021 16:46 - Fuel 17.4 lbs. of untreated wood, 17.7% moisture (wet basis) Air contol set to .75" to produce a medium burn rate.
24	274	947	
25	268	965	
26	229	871	
27	188	739	
28	178	715	
29	174	683	
30	146	501	
31	238	632	8/13/2021 23:35 - Fuel 14.8 lbs. of untreated wood, 16.3% moisture (wet basis) Air contol set to .45" to produce a medium burn rate.
32	351	980	
33	364	1123	
34	362	1012	
35	281	751	
36	265	706	
37	239	634	
38	211	512	
39	361	1015	8/18/2021 15:49 - Fuel 19.6 lbs. of untreated wood, 17.6% moisture (wet basis) Air contol set to produce a medium burn rate.
40	336	945	
41	315	907	
42	396	859	
43	329	1028	8/18/2021 19:49 - Fuel 15.7 lbs. of untreated wood, 17.2% moisture (wet basis) Air contol set to produce a medium burn rate.
44	308	979	
45	329	1028	
46	308	978	
47	201	689	8/18/2021 23:49 - Fuel 14.3 lbs. of untreated wood, 18.2% moisture (wet basis) Air contol set to 1.00" to produce a medium burn rate.
48	162	616	
49	365	987	
50	359	1022	
51	304	797	
52	277	701	
53	263	650	
54	224	503	

This aging data is aggregated from the included handwritten WST 5-Form3 and subsequent handwritten Weight/Moisture calulation sheets.

Wood Heater Aging Data
Woodstove Test Data Sheet #25
WST 5-Form 3, Rev 7/21

Unit: Kuma K-180 Soapstone
Date: 7/26, 8/2, 8/4, 8/10, 8/11
Technicians: BM, ES
Page : 1 of 2

T/C# 7 | 16 17

Hr. #	Date	Time	Firebox Temp	Stack @ 8'	Pre Cat	Post Cat	PAC @	Comments
1	7/26/21	1422	486	482	1315	1098	1.00" @ 1302	
2		1522	573	367	919	951		
3		1622	663	324	831	819		
4		1722	681	297	704	754		
5		1822	577	265	567	613		
6		1922	389	954	702	863	0.75" @ 1918	
7		2022	347	296	815	857		
8		2122	421	338	958	916		
9		2222	444	317	810	875		
10		2322	475	299	781	816		
11		2422	522	244	552	616		
12	↓	0122	638	226	511	573	791-762 5th 29 Mins	
13	8/2/21	1550	507	384	1222	1079	0.75" @ 1516	
14		1650	672	325	945	845		
15		1750	675	272	738	722		
16		1850	609	251	645	656		
17		1950	412	309	827	902	PAC 0.85 @ 1925	
18		2050	407	294	941	1016		
19		2150	512	323	1268	1136		
20	↓	2250	565	198	781	705		
21	8/4/21	1446	318	245	853	868	PAC 0.85 @ 1411	
22		1546	301	301	1071	935		
23		1646	499	272	750	851	PAC 0.85 @ 1635	
24		1746	388	244	886	947		
25		1846	430	268	1098	965		
26		1946	504	229	885	871		
27		2046	838	188	770	789		
28		2146	765	178	736	715		
29	↓	2246	714	174	675	683		

A-39

Unit: Kuma K-180 [illegible]
Date: 7/20, 8/2, 8/4, 8/6, 8/18
Technicians: ATM ESS
Page : 2 of 2

Wood Heater Aging Data
Woodstove Test Data Sheet #25
WST 5-Form 3, Rev 7/21

T/C# 7 1 16 17

Hr. #	Date	Time	Firebox Temp	Stack @ 8'	Pre Cat	Post Cat	PAC @	Comments
30	8/4/21	2346	451	146	462	501	+0 minutes	
31	8/13/21	2335	586	238	599	632	3rd Load in @ 2325 PAC 0.45" @ 2335	[illegible] 1413
32	8/14/21	0035	421	351	678	980		
33		0135	537	364	964	1123		
34		0235	781	362	1045	1012		
35		0335	742	281	736	751		
36		0435	718	265	674	706		
37		0535	630	239	654	634		
38		0635	507	211	460	512	+7 mins.	
39	8/18/21	1549	601	361	1102	1015	Hi Loaded @ 1449 PAC [illegible] @	[illegible] @ 1413
40		1649	634	336	1105	945	0.75	
41		1749	1127	315	941	907		
42		1849	704	396	760	859		
43		1949	671	329	1240	1028	2nd Load in @ 1[illegible] PAC [illegible] 1912	
44		2049	773	308	1154	979	0.75	
45		2149	671	329	1243	1028		
46		2249	773	308	1154	978		
47		2349	716	201	744	689	+ 47 mins	
48	8/19/21	0049	644	162	683	616	3rd Load in @ 0002 PAC 1.00 @ 0027	
49		0102	569	365	1222	987		
50		0202	998	359	1230	1022		
51		0302	948	304	841	797		
52		0402	733	277	711	701		
53		0502	611	263	626	650		
54		0602	495	224	463	503	+0 minutes	
55								

A-40

MYREN CONSULTING, INC. Aging Fuel Load #1

UNIT: Kuma K-180 Series
RUN: Aging Fuel Load 1
DATE: 7/26/21
TECHNICIANS: Arm
Rev 4.4.19

WEIGHT OF THE TEST FUEL LOAD, DRY BASIS (M_{FLdb})

EQN 1: $M_{FLdb} = \Sigma((M_{FLnwb})(100)/(100+MC_{FLndb}))$

M_{FL1db} = ((3.814 lbs.)(100)/(100 + 18.600 %)) = 3.2158 lbs.
M_{FL2db} = ((5.258 lbs.)(100)/(100 + 22.600 %)) = 4.2887 lbs.
M_{FL3db} = ((2.098 lbs.)(100)/(100 + 22.933 %)) = 1.7066 lbs.
M_{FL4db} = ((2.514 lbs.)(100)/(100 + 19.667 %)) = 2.1008 lbs.
M_{FL5db} = ((3.756 lbs.)(100)/(100 + 18.967 %)) = 3.1572 lbs.
M_{FL6db} = ((_____ lbs.)(100)/(100 + _____ %)) = _____ lbs.
M_{FL7db} = ((_____ lbs.)(100)/(100 + _____ %)) = _____ lbs.

TOTAL M_{FLdb} : 14.4691 lbs. 6.5631 kg

WEIGHT BASED COMPOSITE FUEL LOAD MOISTURE CALCULATIONS

Pc #	Wet Weight (lbs.)		Piece Average (% Dry)		Contribution to Fuel Load Average
1	3.814	X	18.600	=	70.9404
2	5.258	X	22.600	=	118.8308
3	2.098	X	22.933	=	48.1134
4	2.514	X	19.667	=	49.4428
5	3.756	X	18.967	=	71.2401
6		X		=	
7		X		=	
8		X		=	
9		X		=	
TOTALS	17.4410 (A)				358.5675 (B)

(6.5631/330)60 = 1.1861 kg/h

Time @ 1" Open
383 - 42 = 341 min.

14.4691 lbs dry Added

383
42 start
341

FUEL LOAD COMPOSITE AVG. MOISTURE (% DB): 20.5601 (B÷A)

FUEL LOAD COMPSITE AVG. MOISTURE (% WB): 17.0538

Note: The individual moisture readings for each cord wood fuel piece were corrected for temperature and species prior to a piece average %DB being calculated on the Cordwood Piece Data Sheet.

A-27

1-252

MYREN CONSULTING, INC.

Kuma Aging Fuel Load #2 [redacted] Test #1

UNIT: Kuma K-180 [illegible]
RUN: Aging Load 2 Fuel 1
DATE: 7/26/21
TECHNICIANS: AIM [illegible]

Rev 3 2.2.21

WEIGHT OF THE TEST FUEL LOAD, DRY BASIS (M_{FLdb})

EQN 1: $M_{FLdb} = \Sigma((M_{FLnwb})(100)/(100+MC_{FLndb}))$

M_{FL1db} = ((4.612 lbs.)(100)/ (100 + 21.367 %)) = 3.8000 lbs.

M_{FL2db} = ((3.538 lbs.)(100)/ (100 + 20.900 %)) = 2.9264 lbs.

M_{FL3db} = ((4.440 lbs.)(100)/ (100 + 22.000 %)) = 3.6393 lbs.

M_{FL4db} = ((2.484 lbs.)(100)/ (100 + 23.100 %)) = 2.0179 lbs.

M_{FL5db} = ((2.442 lbs.)(100)/ (100 + 19.533 %)) = 2.0430 lbs.

M_{FL6db} = ((lbs.)(100)/ (100 + %)) = lbs.

M_{FL7db} = ((lbs.)(100)/ (100 + %)) = lbs.

TOTAL M_{FLdb} : 14.4266 lbs. 6.5439 kg

WEIGHT BASED COMPOSITE FUEL LOAD MOISTURE CALCULATIONS

14.4266 − 0.6 lbs = 13.8266

Pc #	Wet Weight (lbs.)		Piece Average (% Dry)		Contribution to Fuel Load Average
1	4.612	x	21.367	=	98.5446
2	3.538	x	20.900	=	73.9442
3	4.440	x	22.000	=	97.6800
4	2.484	x	23.100	=	57.3804
5	2.442	x	19.533	=	47.6996
6		x		=	
7		x		=	
8		x		=	
9		x		=	
TOTALS	17.516 (A)				375.2488 (B)

Fuel Burnt

13.8266 lbs. (DB)

6.2717 kg (DB)

Dry Burn Rate (DBR):

(dkg/Time) 60 =

(6.2717 / 408) 60 =

0.9223 kg/h (DBR)

426.3
425.7
.6

443.1 Start w/
426.3 End w/
16.8 @ 500 [illegible]
14.4266 [illegible]
791 Burn End [illegible]
383 " [illegible]
408 mins

FUEL LOAD COMPOSITE AVG. MOISTURE (% DB): 21.4232 (B÷A)

FUEL LOAD COMPSITE AVG. MOISTURE (% WB): 17.6434

Note: The individual moisture readings for each cord wood fuel piece were corrected for temperature and species prior to a piece average %DB being calculated on the Cordwood Piece Data Sheet.

A-28

MYREN CONSULTING, INC.

Fire #2 Aging Face Load #1 LOW

Load #3 TOTAL

UNIT: Kuma K-180
RUN: Aging Fuel Load 3
DATE: 8 / 2 / 21
TECHNICIANS: JTM BES

Rev 3 2.2.21

WEIGHT OF THE TEST FUEL LOAD, DRY BASIS (M_{FLdb})

EQN 1: $M_{FLdb} = \Sigma((M_{FLnwb})(100)/(100+MC_{FLndb}))$

M_{FL1db} = ((4.400 lbs.)(100)/ (100 + 22.800 %)) = 3.5831 lbs.

M_{FL2db} = ((3.522 lbs.)(100)/ (100 + 20.833 %)) = 2.9148 lbs.

M_{FL3db} = ((1.726 lbs.)(100)/ (100 + 19.100 %)) = 1.44192 lbs.

M_{FL4db} = ((2.842 lbs.)(100)/ (100 + 19.900 %)) = 2.3703 lbs.

M_{FL5db} = ((2.492 lbs.)(100)/ (100 + 24.033 %)) = 2.0091 lbs.

M_{FL6db} = ((____ lbs.)(100)/ (100 + ____ %)) = ____ lbs.

M_{FL7db} = ((____ lbs.)(100)/ (100 + ____ %)) = ____ lbs.

TOTAL M_{FLdb} : 12.2765 lbs. 5.5913 kg

WEIGHT BASED COMPOSITE FUEL LOAD MOISTURE CALCULATIONS

Pc #	Wet Weight (lbs.)		Piece Average (% Dry)		Contribution to Fuel Load Average
1	4.400	X	22.800	=	100.3200
2	3.522	X	20.833	=	73.3738
3	1.726	X	19.100	=	32.9666
4	2.842	X	19.900	=	56.5558
5	2.492	X	24.033	=	59.8902
6		X		=	
7		X		=	
8		X		=	
9		X		=	
TOTALS	14.982 (A)				323.1064 (B)

Fuel Burnt

____ lbs. (DB)

____ kg (DB)

Dry Burn Rate (DBR):

(dkg/Time) 60 =

(____ / ____) 60 =

____ kg/h (DBR)

FUEL LOAD COMPOSITE AVG. MOISTURE (% DB): 21.5663 (B+A)

FUEL LOAD COMPSITE AVG. MOISTURE (% WB): 17.7404

Note: The individual moisture readings for each cord wood fuel piece were corrected for temperature and species prior to a piece average %DB being calculated on the Cordwood Piece Data Sheet.

A-29

MYREN CONSULTING, INC. Aging Fuel Load #4 EOW Fuel # / Load # c

UNIT: Kuma K-180 Series
RUN: Aging Fuel Load #4
DATE: 8/12/21
TECHNICIANS: ATM ESS
Rev 3 2.2.21

WEIGHT OF THE TEST FUEL LOAD, DRY BASIS (M_{FLdb})

EQN 1: $M_{FLdb} = \Sigma((M_{FLnwb})(100)/(100+MC_{FLndb}))$

M_{FL1db} = ((2.648 lbs.)(100)/ (100 + 20.164 %)) = 2.2036 lbs.

M_{FL2db} = ((4.084 lbs.)(100)/ (100 + 18.967 %)) = 3.4329 lbs.

M_{FL3db} = ((2.398 lbs.)(100)/ (100 + 21.533 %)) = 1.9931 lbs.

M_{FL4db} = ((2.834 lbs.)(100)/ (100 + 19.567 %)) = 2.3702 lbs.

M_{FL5db} = ((2.782 lbs.)(100)/ (100 + 19.033 %)) = 2.3342 lbs.

M_{FL6db} = ((____ lbs.)(100)/ (100 + ____ %)) = ____ lbs.

M_{FL7db} = ((____ lbs.)(100)/ (100 + ____ %)) = ____ lbs.

TOTAL M_{FLdb} : 12.3176 lbs. 5.5840 kg

WEIGHT BASED COMPOSITE FUEL LOAD MOISTURE CALCULATIONS

Pc #	Wet Weight (lbs.)		Piece Average (% Dry)		Contribution to Fuel Load Average
1	2.648	X	20.167	=	53.4022
2	4.084	X	18.967	=	77.4612
3	2.398	X	21.533	=	51.6361
4	2834	X	19.567	=	55.4529
5	2.782	X	19.033	=	52.9498
6		X		=	
7		X		=	
8		X		=	
9		X		=	
TOTALS	14.746 (A)				290.9022 (B)

Fuel Burnt
____ lbs. (DB)
____ kg (DB)

Dry Burn Rate (DBR):
(dkg/Time)60 =
(____/____)60=
____ kg/h (DBR)

FUEL LOAD COMPOSITE AVG. MOISTURE(% DB): 19.7275 (B÷A)

FUEL LOAD COMPSITE AVG. MOISTURE (% WB): 16.4770

Note: The individual moisture readings for each cord wood fuel piece were corrected for temperature and species prior to a piece average %DB being calculated on the Cordwood Piece Data Sheet.

A-30

Fire #3 - Load #1 8-1-8

MYREN CONSULTING, INC.

Aging Load # 5 - Tower M. Low

UNIT: Kuma K-180 Series
RUN: Aging Fire # 3 Load # 5
DATE: 8/4/21
TECHNICIANS: ATM ESS

Rev 4.4.19

WEIGHT OF THE TEST FUEL LOAD, DRY BASIS (M_{FLdb})

EQN 1: $M_{FLdb} = \Sigma((M_{FLnwb})(100)/(100+MC_{FLndb}))$

M_{FL1db} = ((1.894 lbs.)(100)/ (100 + 23.067 %)) = 1.5390 lbs.

M_{FL2db} = ((2.552 lbs.)(100)/ (100 + 20.300 %)) = 2.1214 lbs.

M_{FL3db} = ((2.970 lbs.)(100)/ (100 + 21.200 %)) = 2.4505 lbs.

M_{FL4db} = ((2.012 lbs.)(100)/ (100 + 24.600 %)) = 1.6148 lbs.

M_{FL5db} = ((2.316 lbs.)(100)/ (100 + 19.833 %)) = 1.9327 lbs.

M_{FL6db} = ((lbs.)(100)/ (100 + %)) = lbs.

M_{FL7db} = ((lbs.)(100)/ (100 + %)) = lbs.

TOTAL M_{FLdb} : 9.6584 lbs. 4.3810 kg

WEIGHT BASED COMPOSITE FUEL LOAD MOISTURE CALCULATIONS

Pc #	Wet Weight (lbs.)		Piece Average (% Dry)		Contribution to Fuel Load Average
1	1.894	x	23.067	=	43.6889
2	2.552	x	20.300	=	51.8056
3	2.970	x	21.200	=	62.9640
4	2.012	x	24.600	=	49.4952
5	2.316	x	19.833	=	45.9332
6		x		=	
7		x		=	
8		x		=	
9		x		=	
TOTALS	11.744 (A)				253.8869 (B)

Residual dry fuel
lbs. Added (dry) + 9.658
TOTAL (lbs)
lbs. left (dry) -
lbs. burnt (dry) 11.844
Kg burnt (dry)
Time (min)
DBR
(Kg burnt (dry)/θ) 60 =
kg/h.

FUEL LOAD COMPOSITE AVG. MOISTURE (% DB): 21.6184 (B÷A)

FUEL LOAD COMPSITE AVG. MOISTURE (% WB): 17.7756 = 17.78

Note: The individual moisture readings for each cord wood fuel piece were corrected for temperature and species prior to a piece average %DB being calculated on the Cordwood Piece Data Sheet.

A-31

Fire # 3 - Load # 2

MYREN CONSULTING, INC.

Aging
Fuel Load # 6
M. Low

UNIT: Kuma K-130 Series
RUN: Aging Fire # 3 Load # 6
DATE: 8/4/21
TECHNICIANS: ATM

Rev 4.4.19

WEIGHT OF THE TEST FUEL LOAD, DRY BASIS (M_{FLdb})

EQN 1: $M_{FLdb} = \Sigma((M_{FLnwb})(100)/(100+MC_{FLndb}))$

M_{FL1db} = ((3.568 lbs.)(100)/ (100 + 20.800 %)) = 2.9536 lbs.

M_{FL2db} = ((5.060 lbs.)(100)/ (100 + 23.333 %)) = 4.1027 lbs.

M_{FL3db} = ((3.128 lbs.)(100)/ (100 + 21.800 %)) = 2.5681 lbs.

M_{FL4db} = ((3.438 lbs.)(100)/ (100 + 18.967 %)) = 2.8899 lbs.

M_{FL5db} = ((2.226 lbs.)(100)/ (100 + 22.567 %)) = 1.8161 lbs.

M_{FL6db} = ((____ lbs.)(100)/ (100 + ____ %)) = ____ lbs.

M_{FL7db} = ((____ lbs.)(100)/ (100 + ____ %)) = ____ lbs.

TOTAL M_{FLdb} : 14.3304 lbs. 6.5002 kg

WEIGHT BASED COMPOSITE FUEL LOAD MOISTURE CALCULATIONS

Pc #	Wet Weight (lbs.)		Piece Average (% Dry)		Contribution to Fuel Load Average
1	3.568	x	20.800	=	74.2144
2	5.060	x	23.333	=	118.0650
3	3.128	x	21.800	=	68.1904
4	3.438	x	18.967	=	65.2085
5	2.226	x	22.567	=	50.2341
6		x		=	
7		x		=	
8		x		=	
9		x		=	
TOTALS	17.420 (A)				375.9124 (B)

Residual dry fuel
lbs. Added (dry) 14.330
TOTAL
lbs. left (dry)
lbs burned (dry)
Kg burnt (dry)
Time min 481
DBR
(Kg burnt (dry)/@) 60 =

FUEL LOAD COMPOSITE AVG. MOISTURE (% DB): 21.5794 (B÷A)

FUEL LOAD COMPSITE AVG. MOISTURE (% WB): 17.7492

Note: The individual moisture readings for each cord wood fuel piece were corrected for temperature and species prior to a piece average %DB being calculated on the Cordwood Piece Data Sheet.

A-32

4-1-1

MYREN CONSULTING, INC. Fire #4

LOW

Fuel Load #1

" #7 Temp

UNIT: Kuma K-180 Series
RUN: Fire #4 Fuel Load 1
DATE: 8/13/21
TECHNICIANS: ATM ESS
Rev 3 2.2.21

WEIGHT OF THE TEST FUEL LOAD, DRY BASIS (M_{FLdb})

EQN 1: $M_{FLdb} = \Sigma((M_{FLnwb})(100)/(100+MC_{FLndb}))$

M_{FL1db} = ((3.898 lbs.)(100)/ (100 + 18.300 %)) = 3.2950 lbs.

M_{FL2db} = ((3.148 lbs.)(100)/ (100 + 18.167 %)) = 2.6640 lbs.

M_{FL3db} = ((3.446 lbs.)(100)/ (100 + 23.400 %)) = 2.7925 lbs.

M_{FL4db} = ((1.872 lbs.)(100)/ (100 + 18.433 %)) = 1.5806 lbs.

M_{FL5db} = ((2.398 lbs.)(100)/ (100 + 18.200 %)) = 2.0288 lbs.

M_{FL6db} = ((____ lbs.)(100)/ (100 + ____ %)) = ____ lbs.

M_{FL7db} = ((____ lbs.)(100)/ (100 + ____ %)) = ____ lbs.

TOTAL M_{FLdb} : 12.3609 lbs. 5.6069 kg

WEIGHT BASED COMPOSITE FUEL LOAD MOISTURE CALCULATIONS

Pc #	Wet Weight (lbs.)		Piece Average (% Dry)		Contribution to Fuel Load Average
1	3.898	x	18.300	=	71.3334
2	3.148	x	18.167	=	57.1897
3	3.446	x	23.400	=	80.6364
4	1.872	x	18.433	=	34.5066
5	2.398	x	18.200	=	43.6436
6		x		=	
7		x		=	
8		x		=	
9		x		=	
TOTALS	14.762 (A)				287.3097 (B)

Fuel Burnt

____ lbs. (DB)

____ kg (DB)

Dry Burn Rate (DBR):

(dkg/Time) 60 =

(____ / ____) 60=

____ kg/h (DBR)

FUEL LOAD COMPOSITE AVG. MOISTURE (% DB): 19.4628 (B+A)

FUEL LOAD COMPSITE AVG. MOISTURE (% WB): 16.2919

Note: The individual moisture readings for each cord wood fuel piece were corrected for temperature and species prior to a piece average %DB being calculated on the Cordwood Piece Data Sheet.

A-33

4-22

MYREN CONSULTING, INC. Fire #4

UNIT: Kuma K [illegible]
RUN: Fire #4 Fuel load #2
DATE: 8/13/21
TECHNICIANS: ATM ESS
Rev 3 2.2.21

LOW
Fuel load #2 & 8 TOTAL

WEIGHT OF THE TEST FUEL LOAD, DRY BASIS (M_{FLdb})

EQN 1: $M_{FLdb} = \Sigma((M_{FLnwb})(100)/(100+MC_{FLndb}))$

M_{FL1db} = ((4.690 lbs.)(100)/ (100 + 20.267 %)) = 3.8997 lbs.

M_{FL2db} = ((4.624 lbs.)(100)/ (100 + 20.833 %)) = 3.8268 lbs.

M_{FL3db} = ((2.656 lbs.)(100)/ (100 + 19.267 %)) = 2.2269 lbs.

M_{FL4db} = ((3.106 lbs.)(100)/ (100 + 20.300 %)) = 2.5819 lbs.

M_{FL5db} = ((4.158 lbs.)(100)/ (100 + 18.200 %)) = 3.5178 lbs.

M_{FL6db} = ((____ lbs.)(100)/ (100 + ____ %)) = ____ lbs.

M_{FL7db} = ((____ lbs.)(100)/ (100 + ____ %)) = ____ lbs.

TOTAL M_{FLdb} : 16.0531 lbs. 7.2816 kg

WEIGHT BASED COMPOSITE FUEL LOAD MOISTURE CALCULATIONS

Pc #	Wet Weight (lbs.)		Piece Average (% Dry)		Contribution to Fuel Load Average
1	4.690	X	20.267	=	95.0522
2	4.624	X	20.833	=	96.3318
3	2.656	X	19.267	=	51.1732
4	3.106	X	20.300	=	63.0518
5	4.158	X	18.200	=	75.6756
6		X		=	
7		X		=	
8		X		=	
9		X		=	
TOTALS	19.234 (A)				381.2846 (B)

Fuel Burnt

____ lbs. (DB)

____ kg (DB)

Dry Burn Rate (DBR):

(dkg/Time) 60 =

(____ / ____) 60=

____ kg/h (DBR)

FUEL LOAD COMPOSITE AVG. MOISTURE (% DB): 19.8235 (B÷A)

FUEL LOAD COMPSITE AVG. MOISTURE (% WB): 16.5439

Note: The individual moisture readings for each cord wood fuel piece were corrected for temperature and species prior to a piece average %DB being calculated on the Cordwood Piece Data Sheet.

A-22

MYREN CONSULTING, INC.

Fire #4
LOW
Fuel load #3
" " #4 Total

UNIT: Kuma K-180
RUN: Fire #4 Fuel load #
DATE: 8/13/21
TECHNICIANS: AM LSS

Rev 3 2.2.21

WEIGHT OF THE TEST FUEL LOAD, DRY BASIS (M_{FLdb})

EQN 1: $M_{FLdb} = \Sigma((M_{FLnwb})(100)/(100+MC_{FLndb}))$

M_{FL1db} = ((3.150 lbs.)(100)/ (100 + 22.823 %)) = 3.2157 lbs.

M_{FL2db} = ((4.568 lbs.)(100)/ (100 + 21.053 %)) = 3.7942 lbs.

M_{FL3db} = ((4.912 lbs.)(100)/ (100 + 22.493 %)) = 4.0120 lbs.

M_{FL4db} = ((1.726 lbs.)(100)/ (100 + 19.267 %)) = 1.4472 lbs.

M_{FL5db} = ((3.286 lbs.)(100)/ (100 + 22.400 %)) = 2.6846 lbs.

M_{FL6db} = ((_____ lbs.)(100)/ (100 + _____ %)) = _____ lbs.

M_{FL7db} = ((_____ lbs.)(100)/ (100 + _____ %)) = _____ lbs.

TOTAL M_{FLdb} : 15.1327 lbs. 6.8646 kg

WEIGHT BASED COMPOSITE FUEL LOAD MOISTURE CALCULATIONS

Pc #	Wet Weight (lbs.)		Piece Average (% Dry)		Contribution to Fuel Load Average
1	3.150	X	22.823	=	90.1904
2	4.568	X	21.053	=	96.0787
3	4.912	X	22.493	=	110.1909
4	1.726	X	19.267	=	33.2548
5	3.286	X	22.400	=	73.6064
6		X		=	
7		X		=	
8		X		=	
9		X		=	
TOTALS	18.442 (A)				403.3212 (B)

Fuel Burnt

_____ lbs. (DB)

_____ kg (DB)

Dry Burn Rate (DBR):

(dkg/Time) 60 =

(_____ / _____) 60 =

_____ kg/h (DBR)

FUEL LOAD COMPOSITE AVG. MOISTURE (% DB): 21.8697 (B÷A)

FUEL LOAD COMPSITE AVG. MOISTURE (% WB): 17.9452

Note: The individual moisture readings for each cord wood fuel piece were corrected for temperature and species prior to a piece average %DB being calculated on the Cordwood Piece Data Sheet.

A-23

5-1-10

MYREN CONSULTING, INC.

Fire # 5
Load # 1

LOW
Load 10 (Total)

UNIT: Kuma 130 K-Series
RUN: Fire # Load # 1
DATE: 8/18/21
TECHNICIANS: AM ESS

Rev 3 2.2.21

WEIGHT OF THE TEST FUEL LOAD, DRY BASIS (M_{FLdb})

EQN 1: $M_{FLdb} = \Sigma((M_{FLnwb})(100)/(100+MC_{FLndb}))$

M_{FL1db} = ((2.838 lbs.)(100)/ (100 + 23.000 %)) = 2.3073 lbs.

M_{FL2db} = ((3.424 lbs.)(100)/ (100 + 21.967 %)) = 2.8073 lbs.

M_{FL3db} = ((3.304 lbs.)(100)/ (100 + 20.600 %)) = 2.7396 lbs.

M_{FL4db} = ((5.768 lbs.)(100)/ (100 + 20.767 %)) = 4.7761 lbs.

M_{FL5db} = ((4.294 lbs.)(100)/ (100 + 20.933 %)) = 3.5507 lbs.

M_{FL6db} = ((____ lbs.)(100)/ (100 + ____ %)) = ____ lbs.

M_{FL7db} = ((____ lbs.)(100)/ (100 + ____ %)) = ____ lbs.

TOTAL M_{FLdb} : 16.1810 lbs. 7.3397 kg

WEIGHT BASED COMPOSITE FUEL LOAD MOISTURE CALCULATIONS

Pc #	Wet Weight (lbs.)		Piece Average (% Dry)		Contribution to Fuel Load Average
1	2.838	x	23.000	=	65.2740
2	3.424	x	21.967	=	75.2150
3	3.304	x	20.600	=	68.0624
4	5.768	x	20.767	=	119.7841
5	4.294	x	20.933	=	89.8863
6		x		=	
7		x		=	
8		x		=	
9		x		=	
TOTALS	19.628 (A)				418.2218 (B)

Fuel Burnt

____ lbs. (DB)

____ kg (DB)

Dry Burn Rate (DBR):

(dkg/Time) 60 =

(____ / ____) 60 =

____ kg/h (DBR)

FUEL LOAD COMPOSITE AVG. MOISTURE (% DB): 213074 (B+A)

FUEL LOAD COMPSITE AVG. MOISTURE (% WB): 17.5648

Note: The individual moisture readings for each cord wood fuel piece were corrected for temperature and species prior to a piece average %DB being calculated on the Cordwood Piece Data Sheet.

A-24

5-1-11

MYREN CONSULTING, INC.

Fire #5
Load #2
LOW
Load #11 Total

UNIT: Kumahiro Series
RUN: Fire #5 Load #2
DATE: 8/18/21
TECHNICIANS: ATM ESS
Rev 3 2.2.21

WEIGHT OF THE TEST FUEL LOAD, DRY BASIS (M_{FLdb})

EQN 1: $M_{FLdb} = \Sigma((M_{FLnwb})(100)/(100+MC_{FLndb}))$

M_{FL1db} = ((2.746 lbs.)(100)/ (100 + 19.400 %)) = 2.2998 lbs.

M_{FL2db} = ((3.236 lbs.)(100)/ (100 + 21.300 %)) = 2.6678 lbs.

M_{FL3db} = ((3.276 lbs.)(100)/ (100 + 20.383 %)) = 2.7224 lbs.

M_{FL4db} = ((2.322 lbs.)(100)/ (100 + 20.833 %)) = 1.9217 lbs.

M_{FL5db} = ((4.136 lbs.)(100)/ (100 + 21.400 %)) = 3.4069 lbs.

M_{FL6db} = ((____ lbs.)(100)/ (100 + ____ %)) = ____ lbs.

M_{FL7db} = ((____ lbs.)(100)/ (100 + ____ %)) = ____ lbs.

TOTAL M_{FLdb} : 13.0186 lbs. 5.9052 kg

WEIGHT BASED COMPOSITE FUEL LOAD MOISTURE CALCULATIONS

Pc #	Wet Weight (lbs.)		Piece Average (% Dry)		Contribution to Fuel Load Average
1	2.746	x	19.400	=	53.2724
2	3.236	x	21.300	=	68.9268
3	3.276	x	20.383	=	66.6109
4	2.322	x	20.833	=	48.3742
5	4.136	x	21.400	=	88.5104
6		x		=	
7		x		=	
8		x		=	
9		x		=	
TOTALS	15.716 (A)				325.6947 (B)

Fuel Burnt

____ lbs. (DB)

____ kg (DB)

Dry Burn Rate (DBR):

(dkg/Time) 60 =

(____ / ____) 60 =

____ kg/h (DBR)

FUEL LOAD COMPOSITE AVG. MOISTURE (% DB): 20.7238 (B÷A)

FUEL LOAD COMPSITE AVG. MOISTURE (% WB): 17.1663

Note: The individual moisture readings for each cord wood fuel piece were corrected for temperature and species prior to a piece average %DB being calculated on the Cordwood Piece Data Sheet.

A-25

5-3512

MYREN CONSULTING, INC. Fire #5 Load #3 Low Load #12 Tower

UNIT: Kuma K-180 Series
RUN: Fire #5 Load #3
DATE: 8/13/01
TECHNICIANS: ATA ESS

Rev 4.4.19

WEIGHT OF THE TEST FUEL LOAD, DRY BASIS (M_{FLdb})

EQN 1: $M_{FLdb} = \Sigma((M_{FLnwb})(100)/(100+MC_{FLndb}))$

M_{FL1db} = ((3.920 lbs.)(100)/(100 + 23.200 %)) = 3.1818 lbs.

M_{FL2db} = ((1.252 lbs.)(100)/(100 + 24.767 %)) = 1.0035 lbs.

M_{FL3db} = ((2.982 lbs.)(100)/(100 + 19.800 %)) = 2.4891 lbs.

M_{FL4db} = ((2.594 lbs.)(100)/(100 + 20.300 %)) = 2.1563 lbs.

M_{FL5db} = ((3.514 lbs.)(100)/(100 + 23.683 %)) = 2.8423 lbs.

M_{FL6db} = ((____ lbs.)(100)/(100 + ____ %)) = ____ lbs.

M_{FL7db} = ((____ lbs.)(100)/(100 + ____ %)) = ____ lbs.

TOTAL M_{FLdb} : 11.6730 lbs. 5.2948 kg

WEIGHT BASED COMPOSITE FUEL LOAD MOISTURE CALCULATIONS

Pc #	Wet Weight (lbs.)		Piece Average (% Dry)		Contribution to Fuel Load Average
1	3.920	x	23.200	=	90.9440
2	1.252	x	24.767	=	31.0083
3	2.982	x	19.800	=	59.0436
4	2.594	x	20.300	=	52.6582
5	3.514	x	23.683	=	83.0464
6		x		=	
7		x		=	
8		x		=	
9		x		=	
TOTALS	14.262 (A)				316.7005 (B)

FUEL LOAD COMPOSITE AVG. MOISTURE (% DB): 22.2059 (B+A)

FUEL LOAD COMPSITE AVG. MOISTURE (% WB): 18.1709

Note: The individual moisture readings for each cord wood fuel piece were corrected for temperature and species prior to a piece average %DB being calculated on the Cordwood Piece Data Sheet.

A-26

Run 1

High Burn (Category IV)

Wood Heater Preburn Data - ASTM E2780

Run: 1

Technician Signature:_____

Manufacturer:	Kuma
Model:	K-181
Tracking No.:	2461
Project No.:	0123WM013E
Test Date:	12/12/22
Beginning Clock Time:	12:42

Preburn Fuel Data

Fuel Piece Lengths (in.):	12		
Total Preburn Weight (lb):	9.6		
Fuel Moisture Readings (% DB):	19.5	20.4	20.3
	22.4	21.5	20.2
	20.0	22.2	
Avg Preburn Moisture (% DB):	**20.81**		

Coal Bed Range (lb):	**2.6** (min)	**3.2** (max)

			Temperatures (°F)							
Elapsed Time (min)	Scale (lb)	Stack Draft (in H_2O)	FB Top	FB Bottom	FB Back	FB Left	FB Right	Avg. FB	Stack	Ambient
0	11.6	-0.067	419	333	481	498	520	450.2	434	68
1	11.1	-0.07	427	331	475	495	518	449.2	514	68
2	10.9	-0.072	441	330	469	491	516	449.4	555	69
3	10.7	-0.073	459	329	461	488	513	450	573	69
4	10.5	-0.074	479	328	454	484	510	451	585	68
5	10.3	-0.075	499	329	446	480	507	452.2	594	68
6	10.1	-0.075	519	329	439	477	503	453.4	599	69
7	9.9	-0.077	537	328	431	474	500	454	605	69
8	9.7	-0.077	554	328	424	471	496	454.6	610	69
9	9.5	-0.077	569	328	418	469	493	455.4	614	68
10	9.3	-0.077	583	327	411	466	490	455.4	619	68
11	9.1	-0.078	596	327	406	464	487	456	622	69
12	8.8	-0.079	608	326	400	462	485	456.2	625	70
13	8.6	-0.079	620	325	395	461	483	456.8	630	69
14	8.4	-0.079	631	324	390	460	481	457.2	631	69
15	8.1	-0.079	641	323	386	460	480	458	633	69
16	7.9	-0.078	650	322	382	460	479	458.6	633	69
17	7.7	-0.079	658	321	379	460	478	459.2	633	70
18	7.4	-0.078	665	321	376	460	478	460	631	70
19	7.2	-0.078	672	319	373	461	478	460.6	632	69
20	7	-0.078	677	318	370	461	479	461	629	70
21	6.8	-0.078	682	316	368	463	479	461.6	626	70
22	6.5	-0.078	685	316	367	464	481	462.6	622	71
23	6.3	-0.078	687	315	365	466	482	463	619	71
24	6.1	-0.078	689	313	364	467	484	463.4	619	69
25	5.9	-0.077	692	312	363	469	486	464.4	620	70
26	5.6	-0.077	693	311	362	471	488	465	619	69
27	5.5	-0.076	694	310	362	474	490	466	617	70
28	5.3	-0.077	694	308	362	476	493	466.6	617	71
29	5.1	-0.076	693	307	362	478	496	467.2	613	70
30	4.9	-0.075	692	306	362	481	499	468	611	69
31	4.8	-0.075	690	305	363	483	502	468.6	608	70
32	4.6	-0.074	687	305	363	486	505	469.2	605	70
33	4.5	-0.075	683	303	364	488	508	469.2	602	71
34	4.3	-0.073	679	302	366	491	512	470	598	71
35	4.2	-0.073	673	301	367	494	515	470	594	70
36	4.1	-0.073	666	301	369	498	519	470.6	587	70
37	4	-0.073	660	300	371	501	523	471	585	71
38	3.9	-0.072	655	300	373	504	526	471.6	581	71

Wood Heater Preburn Data - ASTM E2780

Run: 1

Technician Signature:_____

Manufacturer: Kuma
Model: K-181
Tracking No.: 2461
Project No.: 0123WM013E
Test Date: 12/12/22
Beginning Clock Time:

Preburn Fuel Data

Fuel Piece Lengths (in.): 12
Total Preburn Weight (lb): 9.6

Fuel Moisture Readings (% DB):		
19.5	20.4	20.3
22.4	21.5	20.2
20.0	22.2	

Avg Preburn Moisture (% DB): **20.81**

Coal Bed Range (lb):	**2.6** (min)	**3.2** (max)

			Temperatures (°F)							
Elapsed Time (min)	Scale (lb)	Stack Draft (in H_2O)	FB Top	FB Bottom	FB Back	FB Left	FB Right	Avg. FB	Stack	Ambient
39	3.7	-0.072	650	298	376	507	530	472.2	581	71
40	3.6	-0.072	646	298	379	511	533	473.4	580	70
41	3.5	-0.072	643	298	383	515	536	475	579	70
42	3.4	-0.072	641	297	387	518	539	476.4	580	70
43	3.3	-0.071	639	297	392	522	541	478.2	578	70
44	3.2	-0.071	637	297	396	526	544	480	577	71
45	3.1	-0.071	634	296	400	529	546	481	570	70
46	3	-0.07	628	296	405	532	548	481.8	562	70
47	3	-0.069	621	296	409	535	550	482.2	554	69
48	2.9	-0.068	611	295	413	538	551	481.6	545	70
49	2.8	-0.068	601	296	418	541	553	481.8	538	70
50	2.8	-0.067	590	296	422	543	554	481	532	71
51	2.7	-0.067	578	295	425	544	556	479.6	526	70
52	2.7	-0.064	563	299	429	550	557	479.6	526	69
53	2.7	-0.065	548	298	433	553	559	478.2	508	69
54	2.7	-0.065	536	298	435	554	560	476.6	512	70
55	2.7	-0.063	522	301	437	554	561	475	540	70
56	2.7	-0.065	508	299	438	551	562	471.6	498	70
57	2.7	-0.064	498	298	438	550	562	469.2	495	70
58	2.7	-0.064	488	298	437	547	561	466.2	492	70
59	2.6	-0.063	480	298	435	545	559	463.4	488	70
60	2.6	-0.063	471	298	433	543	557	460.4	484	69

Wood Heater Test Fuel Data - ASTM E2780

Manufacturer:	Kuma
Model:	K-181
Tracking No.:	2461
Project No.:	0123WM013E
Test Date:	12/12/2022
Run No.:	1

Firebox Volume (ft^3):	1.731
Fuel Piece Length (in):	15.25
2x4 Crib Weight (lb):	4.6
4x4 Crib Weight (lb):	8.2

Total Fuel Weight (Dry Basis, lb):	10.5	
Fuel Density (lb/ft^3, Dry Basis):	29.35	OK
Loading Density (lb/ft^3, Wet Basis):	7.39	OK
2x4 Percentage:	36%	OK

Coal Bed Range (20-25%): **2.56 - 3.2**

Test Fuel Piece	Weight (lb)	Size	Readings (Dry Basis %)			Dry Weight (lb)
1	1.8	2"x 4"	19.8	21.2	22.6	1.49
2	1.7	2"x 4"	22.2	22.1	19.4	1.40
3	3.9	4"x 4"	24.8	20.5	23.8	3.17
4	3.7	4"x 4"	22.8	24.9	21.4	3.01

Spacer Readings (Dry Basis %)			
18.9	22.3	19.8	21.2
20.0	19.4	19.3	21.4
21.7	18.3	20.0	21.4

Technician Signature:_____

Wood Heater Test Data

u

Run: 1

Manufacturer: Kuma
Model: K-181
Tracking No.: 2461
Project No.: 0123WM013E
Test Date: 12-Dec-22
Beginning Clock Time: 13:42

Total Sampling Time: 131 min
Recording Interval: 1 min
Background Sample Volume: 26.262 cubic feet

Meter Box Y Factor: 1.004 (1) 1.002 (2) 1.016 (Amb)

Barometric Pressure:	Begin	Middle	End	Average	
	30.07	30.09	30.09	30.08	0

OMNI Equipment Numbers:

PM Control Modules: 335, 00336
Dilution Tunnel MW(dry): 29.00 lb/lb-mole
Dilution Tunnel MW(wet): 28.78 lb/lb-mole
Dilution Tunnel H2O: 2.00 percent
Dilution Tunnel Static: -0.310 "H2O
Tunnel Area: 0.19625 ft2
Pitot Tube Cp: 0.99

Avg. Tunnel Velocity: 18.83 ft/sec.
Initial Tunnel Flow: 205.1 scfm
Average Tunnel Flow: 204.3 scfm
Post-Test Leak Check (1): 0.000 cfm @ 14 in. Hg
Post-Test Leak Check (2): 0.000 cfm @ 12 in. Hg
Average Test Piece Fuel Moisture: 22.17 Dry Basis %

Technician Signature:_____

Export to PDF

Velocity Traverse Data

	Pt.1	Pt.2	Pt.3	Pt.4	Pt.5	Pt.6	Pt.7	Pt.8	Center	
Initial dP	0.084	0.086	0.082	0.068	0.062	0.076	0.082	0.072	0.102	"H2O
Temp:	102	102	104	103	103	103	102	102	101	°F

V_{strav} 18.85 ft/sec V_{scent} 21.77 ft/sec F_p 0.866

	Particulate Sampling Data														Fuel Weight (lb)		Temperature Data (°F)												Stack Gas Data		
Elapsed Time (min)	Gas Meter 1 (ft^3)	Gas Meter 2 (ft^3)	Sample Rate 1 (cfm)	Sample Rate 2 (cfm)	Orifice dH 1 ("H_2O)	Meter 1 Temp (°F)	Meter 1 Vacuum ("Hg)	Orifice dH 2 ("H_2O)	Meter 2 Temp (°F)	Meter 2 Vacuum ("Hg)	Dilution Tunnel (°F)	Dilution Tunnel Center dP	Pro. Rate 1	Pro. Rate 2	Scale Reading	Weight Change	Firebox Top	Firebox Bottom	Firebox Back	Firebox Left	Firebox Right	Avg. Stove Surface	Catalyst Exit	Stack	Filter 1	Dryer Exit 1	Filter 2	Dryer Exit 2	Ambient	Draft ("H_2O)	CO_2 (%)	CO (%)
0	0.000	0.000			0.55	74	1.92	0.57	73	1.4	106	0.100			12.8		460	301	436	540	554	458	659	455	68	39	68	45	70	-0.060	5.45	0.04
1	0.150	0.153	0.15	0.15	1.29	74	2.76	1.08	73	2.2	133	0.100	97	99	12.7	-0.1	461	310	444	541	552	462	475	396	70	38	70	41	70	-0.049	1.29	0.22
2	0.309	0.309	0.16	0.16	1.28	73	2.76	1.08	73	2.1	131	0.101	102	100	12.6	-0.1	457	309	449	534	549	460	495	413	71	37	70	41	70	-0.057	1.43	0.14
3	0.469	0.465	0.16	0.16	1.28	73	2.76	1.08	73	2.2	109	0.101	101	98	12.5	-0.1	454	305	451	528	546	457	609	418	72	37	71	41	69	-0.061	7.2	0.06
4	0.628	0.627	0.16	0.16	1.28	74	2.75	1.19	73	2.3	108	0.100	101	103	12.4	-0.1	458	302	452	523	542	455	758	469	72	37	71	41	69	-0.066	11.21	0.11
5	0.787	0.788	0.16	0.16	1.26	74	2.76	1.13	73	2.2	108	0.101	100	102	12.2	-0.2	469	301	451	518	538	455	846	511	72	38	71	41	69	-0.069	12.88	0.2
6	0.945	0.947	0.16	0.16	1.26	74	2.75	1.12	73	2.2	108	0.100	100	101	12.0	-0.2	487	299	450	513	533	456	928	544	72	38	71	41	69	-0.071	13.97	0.25
7	1.103	1.106	0.16	0.16	1.26	74	2.76	1.12	74	2.2	110	0.100	100	101	11.9	-0.1	509	298	447	508	527	458	994	566	72	38	71	41	68	-0.073	15.09	0.23
8	1.263	1.264	0.16	0.16	1.29	74	2.79	1.12	74	2.2	110	0.101	101	100	11.7	-0.2	533	297	445	503	521	460	1023	583	73	38	71	41	68	-0.075	15.19	0.27
9	1.423	1.423	0.16	0.16	1.28	74	2.79	1.11	74	2.3	110	0.100	101	101	11.5	-0.2	537	298	432	497	515	456	1038	592	73	38	72	41	69	-0.076	15.49	0.59
10	1.583	1.582	0.16	0.16	1.28	74	2.8	1.12	74	2.2	110	0.100	101	101	11.3	-0.2	545	298	421	492	509	453	1061	597	73	39	72	42	68	-0.076	15.76	0.46
11	1.742	1.740	0.16	0.16	1.28	74	2.78	1.11	74	2.2	110	0.100	101	100	11.1	-0.2	554	296	412	488	504	451	1071	600	73	39	72	42	68	-0.078	15.92	0.54
12	1.902	1.901	0.16	0.16	1.28	74	2.78	1.15	74	2.3	111	0.100	102	102	10.9	-0.2	563	296	404	484	498	449	1084	604	74	39	72	42	68	-0.078	15.98	0.71
13	2.063	2.062	0.16	0.16	1.28	74	2.78	1.14	74	2.3	111	0.101	102	102	10.7	-0.2	572	295	398	481	493	448	1090	606	74	39	72	42	68	-0.078	16.2	0.91
14	2.222	2.222	0.16	0.16	1.27	74	2.78	1.14	74	2.3	111	0.101	100	101	10.5	-0.2	581	294	392	478	489	447	1101	609	74	39	72	42	68	-0.078	16.42	0.96
15	2.381	2.383	0.16	0.16	1.28	75	2.79	1.14	74	2.3	112	0.100	101	102	10.3	-0.2	588	294	388	476	485	446	1102	609	74	40	73	42	68	-0.078	16.33	0.84
16	2.540	2.544	0.16	0.16	1.28	75	2.77	1.14	75	2.3	112	0.100	101	102	10.1	-0.2	595	293	383	473	481	445	1107	611	74	40	73	43	68	-0.078	16.48	0.96
17	2.701	2.704	0.16	0.16	1.28	75	2.78	1.14	75	2.3	112	0.100	102	101	9.9	-0.2	601	293	380	471	477	444	1102	610	74	40	73	43	68	-0.078	16.51	0.9
18	2.860	2.864	0.16	0.16	1.27	75	2.78	1.14	75	2.3	112	0.101	100	101	9.7	-0.2	605	292	376	469	474	443	1103	609	75	40	73	43	69	-0.078	16.65	0.97
19	3.019	3.026	0.16	0.16	1.28	75	2.78	1.14	75	2.3	112	0.100	101	103	9.5	-0.2	610	291	373	468	471	443	1109	611	75	40	73	43	68	-0.078	16.77	1.12
20	3.179	3.185	0.16	0.16	1.27	75	2.79	1.13	75	2.3	112	0.100	101	101	9.3	-0.2	615	290	371	467	468	442	1113	612	75	41	73	43	68	-0.078	16.92	1.12
21	3.339	3.345	0.16	0.16	1.28	75	2.79	1.13	75	2.3	113	0.100	102	101	9.0	-0.3	619	289	369	466	466	442	1122	613	75	41	73	44	68	-0.078	17.16	1.26
22	3.498	3.506	0.16	0.16	1.27	75	2.78	1.13	75	2.3	113	0.101	100	102	8.8	-0.2	623	288	368	465	465	442	1123	613	75	41	73	44	68	-0.078	17.24	1.28
23	3.657	3.666	0.16	0.16	1.27	76	2.8	1.13	76	2.3	113	0.099	101	102	8.6	-0.2	628	287	367	464	463	442	1123	613	75	41	73	44	68	-0.079	17.24	1.3
24	3.817	3.826	0.16	0.16	1.27	76	2.78	1.13	76	2.3	113	0.100	101	101	8.4	-0.2	631	286	366	464	462	442	1121	613	75	42	74	44	68	-0.078	17.4	1.23
25	3.977	3.987	0.16	0.16	1.27	76	2.79	1.13	76	2.3	113	0.101	101	101	8.2	-0.2	634	285	366	464	462	442	1121	612	75	42	74	44	68	-0.078	17.62	1.09
26	4.137	4.147	0.16	0.16	1.27	76	2.79	1.12	76	2.3	112	0.100	101	101	8.0	-0.2	637	284	366	463	462	442	1131	614	75	42	74	45	69	-0.078	17.82	1.06
27	4.295	4.306	0.16	0.16	1.27	76	2.8	1.12	76	2.3	113	0.100	100	101	7.8	-0.2	641	282	367	464	462	443	1134	614	75	42	74	45	69	-0.078	17.83	1.04
28	4.455	4.467	0.16	0.16	1.27	76	2.8	1.12	76	2.3	112	0.101	101	101	7.6	-0.2	644	281	368	464	463	444	1129	614	76	43	74	45	69	-0.078	17.92	0.94
29	4.615	4.627	0.16	0.16	1.27	77	2.81	1.12	76	2.3	113	0.099	102	102	7.4	-0.2	646	280	370	465	464	445	1120	615	76	43	74	45	68	-0.078	17.83	0.75
30	4.774	4.786	0.16	0.16	1.27	77	2.8	1.13	76	2.3	112	0.099	101	101	7.2	-0.2	647	279	372	465	465	446	1118	614	76	43	74	45	68	-0.078	17.79	0.7
31	4.933	4.946	0.16	0.16	1.26	77	2.8	1.12	77	2.3	113	0.098	102	102	7.0	-0.2	649	278	374	465	466	446	1124	616	76	43	74	46	68	-0.078	17.92	0.61
32	5.092	5.107	0.16	0.16	1.26	77	2.81	1.12	77	2.3	113	0.099	101	102	6.9	-0.1	651	276	377	466	468	448	1131	617	76	43	74	46	68	-0.078	17.97	0.37
33	5.252	5.266	0.16	0.16	1.27	77	2.8	1.12	77	2.3	112	0.100	101	100	6.7	-0.2	653	275	380	467	470	449	1119	615	76	44	74	46	68	-0.078	17.66	0.24
34	5.412	5.426	0.16	0.16	1.26	77	2.81	1.12	77	2.3	112	0.100	101	101	6.5	-0.2	653	274	384	468	471	450	1110	614	76	44	74	46	68	-0.077	17.41	0.19
35	5.571	5.586	0.16	0.16	1.26	77	2.82	1.12	77	2.3	112	0.100	100	101	6.3	-0.2	652	273	388	470	474	451	1101	610	76	44	74	46	68	-0.077	17.04	0.14

Wood Heater Test Data

u

Run: 1

Manufacturer: Kuma
Model: K-181
Tracking No.: 2461
Project No.: 0123WM013E
Test Date: 12-Dec-22
Beginning Clock Time: 13:42

Total Sampling Time: 131 min
Recording Interval: 1 min
Background Sample Volume: 26.262 cubic feet

Meter Box Y Factor: 1.004 (1) 1.002 (2) 1.016 (Amb)

Barometric Pressure:	Begin	Middle	End	Average
	30.07	30.09	30.09	30.08 0

OMNI Equipment Numbers:

PM Control Modules: 335, 00336
Dilution Tunnel MW(dry): 29.00 lb/lb-mole
Dilution Tunnel MW(wet): 28.78 lb/lb-mole
Dilution Tunnel H2O: 2.00 percent
Dilution Tunnel Static: -0.310 "H2O
Tunnel Area: 0.19625 ft2
Pitot Tube Cp: 0.99

Avg. Tunnel Velocity: 18.83 ft/sec.
Initial Tunnel Flow: 205.1 scfm
Average Tunnel Flow: 204.3 scfm
Post-Test Leak Check (1): 0.000 cfm @ 14 in. Hg
Post-Test Leak Check (2): 0.000 cfm @ 12 in. Hg
Average Test Piece Fuel Moisture: 22.17 Dry Basis %

Technician Signature:_____

Export to PDF

Velocity Traverse Data

	Pt.1	Pt.2	Pt.3	Pt.4	Pt.5	Pt.6	Pt.7	Pt.8	Center	
Initial dP	0.084	0.086	0.082	0.068	0.062	0.076	0.082	0.072	0.102	"H2O
Temp:	102	102	104	103	103	103	102	102	101	°F

V_{strav} 18.85 ft/sec V_{scent} 21.77 ft/sec F_p 0.866

	Particulate Sampling Data														Fuel Weight (lb)		Temperature Data (°F)												Stack Gas Data		
Elapsed Time (min)	Gas Meter 1 (ft^3)	Gas Meter 2 (ft^3)	Sample Rate 1 (cfm)	Sample Rate 2 (cfm)	Orifice dH 1 ("H_2O)	Meter 1 Temp (°F)	Meter 1 Vacuum ("Hg)	Orifice dH 2 ("H_2O)	Meter 2 Temp (°F)	Meter 2 Vacuum ("Hg)	Dilution Tunnel (°F)	Dilution Tunnel Center dP	Pro. Rate 1	Pro. Rate 2	Scale Reading	Weight Change	Firebox Top	Firebox Bottom	Firebox Back	Firebox Left	Firebox Right	Avg. Stove Surface	Catalyst Exit	Stack	Filter 1	Dryer Exit 1	Filter 2	Dryer Exit 2	Ambient	Draft ("H_2O)	CO_2 (%)	CO (%)
36	5.730	5.746	0.16	0.16	1.27	77	2.82	1.12	77	2.3	112	0.101	100	100	6.2	-0.1	651	272	392	471	476	452	1094	608	76	44	74	47	68	-0.077	16.82	0.11
37	5.890	5.906	0.16	0.16	1.27	78	2.81	1.13	77	2.3	111	0.100	101	101	6.0	-0.2	649	271	397	473	478	454	1088	605	76	45	74	47	67	-0.077	16.65	0.09
38	6.050	6.067	0.16	0.16	1.27	78	2.81	1.12	77	2.3	111	0.101	100	101	5.9	-0.1	647	270	402	474	480	455	1082	602	76	45	74	47	67	-0.077	16.37	0.06
39	6.209	6.227	0.16	0.16	1.26	78	2.81	1.12	78	2.3	111	0.102	99	100	5.7	-0.2	644	269	407	476	481	455	1071	599	76	45	74	47	67	-0.077	16.05	0.06
40	6.369	6.387	0.16	0.16	1.27	78	2.81	1.13	78	2.3	110	0.104	99	99	5.6	-0.1	640	268	411	478	483	456	1061	596	76	45	74	47	66	-0.076	15.83	0.04
41	6.529	6.548	0.16	0.16	1.27	78	2.8	1.12	78	2.3	109	0.103	99	100	5.4	-0.2	636	267	415	480	485	457	1054	592	75	45	74	48	65	-0.076	15.53	0.03
42	6.690	6.708	0.16	0.16	1.27	78	2.8	1.12	78	2.3	109	0.102	100	100	5.3	-0.1	631	266	420	481	486	457	1052	589	75	46	74	48	66	-0.076	15.44	0.05
43	6.850	6.868	0.16	0.16	1.27	78	2.8	1.12	78	2.3	109	0.102	100	100	5.2	-0.1	627	265	424	484	488	458	1048	587	75	46	73	48	66	-0.076	15.34	0.04
44	7.009	7.029	0.16	0.16	1.27	78	2.81	1.12	78	2.3	109	0.102	99	100	5.0	-0.2	623	264	428	485	489	458	1043	586	75	46	73	48	66	-0.075	15.32	0.04
45	7.169	7.189	0.16	0.16	1.27	78	2.8	1.12	78	2.3	109	0.101	100	100	4.9	-0.1	619	263	432	487	491	458	1041	584	75	46	73	48	66	-0.075	15.45	0.05
46	7.329	7.349	0.16	0.16	1.27	78	2.8	1.12	78	2.3	109	0.100	101	101	4.8	-0.1	616	263	436	489	492	459	1039	584	75	46	73	48	67	-0.075	15.41	0.06
47	7.491	7.510	0.16	0.16	1.27	78	2.81	1.12	78	2.3	109	0.101	101	101	4.6	-0.2	613	263	441	490	493	460	1038	584	75	47	73	48	67	-0.075	15.41	0.06
48	7.650	7.670	0.16	0.16	1.27	78	2.8	1.12	78	2.3	109	0.102	99	100	4.5	-0.1	612	262	446	492	495	461	1051	584	75	47	73	49	67	-0.075	14.5	0.03
49	7.810	7.830	0.16	0.16	1.27	78	2.8	1.13	78	2.3	109	0.101	100	100	4.4	-0.1	611	261	451	493	496	462	1050	583	75	47	73	49	67	-0.075	14.19	0.01
50	7.970	7.992	0.16	0.16	1.27	78	2.81	1.13	78	2.3	109	0.101	100	101	4.3	-0.1	607	260	456	495	498	463	1028	577	75	47	73	49	67	-0.074	13.89	0.01
51	8.131	8.152	0.16	0.16	1.27	78	2.81	1.13	78	2.3	109	0.100	101	101	4.1	-0.2	602	259	461	496	499	463	1013	572	75	47	73	49	67	-0.074	13.75	0.01
52	8.291	8.313	0.16	0.16	1.28	78	2.81	1.12	78	2.3	108	0.100	101	101	4.0	-0.1	597	258	466	497	501	464	1006	568	75	47	73	49	67	-0.073	13.77	0.01
53	8.452	8.473	0.16	0.16	1.27	79	2.8	1.13	78	2.3	108	0.101	101	100	3.9	-0.1	592	258	470	499	502	464	999	565	75	47	73	49	67	-0.073	13.68	0.01
54	8.612	8.635	0.16	0.16	1.27	79	2.81	1.13	78	2.3	107	0.101	100	101	3.8	-0.1	587	257	473	500	503	464	987	561	75	48	73	49	67	-0.073	13.49	0
55	8.772	8.795	0.16	0.16	1.28	79	2.81	1.13	78	2.3	107	0.100	100	100	3.7	-0.1	582	257	477	501	503	464	974	558	75	48	73	49	67	-0.072	13.03	0.01
56	8.933	8.956	0.16	0.16	1.28	79	2.81	1.13	79	2.3	107	0.101	100	100	3.6	-0.1	576	257	480	501	504	464	957	554	75	48	73	49	67	-0.072	12.58	0.01
57	9.094	9.118	0.16	0.16	1.28	79	2.8	1.13	79	2.3	107	0.100	101	101	3.5	-0.1	569	256	483	503	505	463	950	550	75	48	73	50	67	-0.071	12.49	0.01
58	9.254	9.279	0.16	0.16	1.27	79	2.8	1.13	79	2.3	106	0.100	100	101	3.4	-0.1	562	256	487	504	505	463	939	546	75	48	73	50	68	-0.071	12.25	0.01
59	9.414	9.440	0.16	0.16	1.28	79	2.79	1.13	79	2.3	105	0.099	101	101	3.3	-0.1	556	256	489	504	506	462	938	542	75	48	73	50	67	-0.071	12.3	0.01
60	9.575	9.601	0.16	0.16	1.28	79	2.79	1.14	79	2.3	105	0.100	101	101	3.2	-0.1	550	256	492	505	506	462	936	538	75	48	73	50	67	-0.070	12.26	0.01
61	9.736	9.764	0.16	0.16	1.30	79	3.19	1.13	79	2.3	105	0.099	101	102	3.1	-0.1	545	256	493	506	507	461	933	537	67	48	73	50	68	-0.070	12.23	0.01
62	9.898	9.925	0.16	0.16	1.30	79	3.18	1.13	79	2.3	105	0.102	100	100	3.1	0	540	256	494	507	507	461	926	533	68	49	73	50	67	-0.070	11.89	0
63	10.060	10.086	0.16	0.16	1.30	79	3.18	1.13	79	2.3	104	0.103	100	99	3.0	-0.1	535	256	495	507	507	460	920	530	68	49	73	50	68	-0.069	11.74	0.01
64	10.222	10.248	0.16	0.16	1.29	79	3.19	1.14	79	2.3	104	0.103	100	100	2.9	-0.1	530	256	495	507	508	459	912	527	69	49	73	50	67	-0.069	11.58	0.01
65	10.383	10.410	0.16	0.16	1.30	79	3.18	1.14	79	2.3	103	0.101	100	101	2.8	-0.1	526	256	495	507	509	459	906	525	69	49	73	51	67	-0.069	11.48	0.01
66	10.545	10.572	0.16	0.16	1.30	79	3.18	1.14	79	2.3	103	0.102	100	100	2.8	0	521	256	495	507	510	458	902	522	69	49	73	51	67	-0.069	11.32	0.01
67	10.706	10.733	0.16	0.16	1.29	79	3.19	1.14	79	2.3	103	0.101	100	100	2.7	-0.1	517	256	495	508	511	457	898	520	69	49	73	51	68	-0.069	11.09	0.01
68	10.868	10.895	0.16	0.16	1.30	79	3.17	1.14	79	2.3	103	0.100	101	101	2.6	-0.1	513	256	494	507	512	456	884	517	69	49	73	51	69	-0.068	10.45	0.02
69	11.031	11.057	0.16	0.16	1.30	79	3.19	1.13	79	2.3	102	0.101	101	100	2.6	0	508	256	494	507	514	456	875	514	70	49	73	51	67	-0.068	10.55	0.02
70	11.193	11.218	0.16	0.16	1.29	79	3.19	1.13	79	2.3	102	0.100	101	100	2.5	-0.1	503	256	494	507	515	455	871	513	70	49	73	51	67	-0.068	10.68	0.02
71	11.355	11.380	0.16	0.16	1.29	79	3.18	1.14	79	2.3	102	0.101	101	100	2.4	-0.1	499	256	493	507	516	454	870	511	70	50	73	51	67	-0.067	10.57	0.03

Wood Heater Test Data

u

Run: 1

Manufacturer: Kuma
Model: K-181
Tracking No.: 2461
Project No.: 0123WM013E
Test Date: 12-Dec-22
Beginning Clock Time: 13:42

Total Sampling Time: 131 min
Recording Interval: 1 min
Background Sample Volume: 26.262 cubic feet

Meter Box Y Factor: 1.004 (1) 1.002 (2) 1.016 (Amb)

Barometric Pressure:	Begin	Middle	End	Average	
	30.07	30.09	30.09	30.08	0

OMNI Equipment Numbers:

PM Control Modules: 335, 00336
Dilution Tunnel MW(dry): 29.00 lb/lb-mole
Dilution Tunnel MW(wet): 28.78 lb/lb-mole
Dilution Tunnel H2O: 2.00 percent
Dilution Tunnel Static: -0.310 "H2O
Tunnel Area: 0.19625 ft2
Pitot Tube Cp: 0.99

Avg. Tunnel Velocity: 18.83 ft/sec.
Initial Tunnel Flow: 205.1 scfm
Average Tunnel Flow: 204.3 scfm
Post-Test Leak Check (1): 0.000 cfm @ 14 in. Hg
Post-Test Leak Check (2): 0.000 cfm @ 12 in. Hg
Average Test Piece Fuel Moisture: 22.17 Dry Basis %

Technician Signature:_____

Export to PDF

Velocity Traverse Data

	Pt.1	Pt.2	Pt.3	Pt.4	Pt.5	Pt.6	Pt.7	Pt.8	Center	
Initial dP	0.084	0.086	0.082	0.068	0.062	0.076	0.082	0.072	0.102	"H2O
Temp:	102	102	104	103	103	103	102	102	101	°F

V_{strav} 18.85 ft/sec V_{scent} 21.77 ft/sec F_p 0.866

	Particulate Sampling Data														Fuel Weight (lb)		Temperature Data (°F)												Stack Gas Data		
Elapsed Time (min)	Gas Meter 1 (ft^3)	Gas Meter 2 (ft^3)	Sample Rate 1 (cfm)	Sample Rate 2 (cfm)	Orifice dH 1 ("H_2O)	Meter 1 Temp (°F)	Meter 1 Vacuum ("Hg)	Orifice dH 2 ("H_2O)	Meter 2 Temp (°F)	Meter 2 Vacuum ("Hg)	Dilution Tunnel (°F)	Dilution Tunnel Center dP	Pro. Rate 1	Pro. Rate 2	Scale Reading	Weight Change	Firebox Top	Firebox Bottom	Firebox Back	Firebox Left	Firebox Right	Avg. Stove Surface	Catalyst Exit	Stack	Filter 1	Dryer Exit 1	Filter 2	Dryer Exit 2	Ambient	Draft ("H_2O)	CO_2 (%)	CO (%)
72	11.516	11.542	0.16	0.16	1.29	79	3.18	1.14	79	2.3	102	0.101	100	100	2.4	0	495	256	492	506	517	453	867	510	70	50	73	51	67	-0.068	10.51	0.02
73	11.678	11.705	0.16	0.16	1.30	79	3.19	1.14	79	2.3	102	0.100	101	102	2.3	-0.1	492	256	491	505	518	452	865	507	71	50	73	51	68	-0.067	10.38	0.02
74	11.840	11.866	0.16	0.16	1.30	79	3.19	1.14	79	2.3	101	0.102	100	99	2.2	-0.1	489	256	490	505	519	452	862	506	71	50	73	51	68	-0.067	10.15	0.03
75	12.001	12.028	0.16	0.16	1.30	79	3.19	1.14	79	2.3	101	0.102	99	100	2.2	0	486	256	487	503	519	450	864	506	71	50	73	51	69	-0.067	9.95	0.03
76	12.164	12.190	0.16	0.16	1.30	79	3.18	1.14	79	2.3	101	0.102	101	100	2.1	-0.1	484	256	485	502	520	449	867	506	71	50	73	52	67	-0.067	9.84	0.04
77	12.326	12.353	0.16	0.16	1.26	79	3.14	1.14	79	2.3	100	0.100	101	101	2.1	0	482	256	482	501	520	448	869	506	71	50	73	52	67	-0.067	9.78	0.04
78	12.487	12.514	0.16	0.16	1.28	79	3.16	1.12	79	2.3	101	0.101	100	100	2.0	-0.1	480	257	480	500	520	447	869	506	71	50	73	52	67	-0.067	9.72	0.04
79	12.648	12.674	0.16	0.16	1.28	79	3.17	1.13	79	2.3	101	0.100	100	100	2.0	0	478	257	477	499	520	446	866	504	71	50	73	52	67	-0.067	9.78	0.04
80	12.809	12.836	0.16	0.16	1.28	79	3.16	1.13	79	2.3	100	0.102	99	100	1.9	-0.1	476	257	474	498	519	445	860	503	72	50	73	52	68	-0.067	9.74	0.04
81	12.970	12.997	0.16	0.16	1.28	79	3.16	1.13	79	2.3	100	0.101	100	100	1.8	-0.1	474	257	471	497	519	444	856	501	72	50	73	52	67	-0.067	9.57	0.04
82	13.131	13.158	0.16	0.16	1.28	79	3.16	1.12	79	2.3	100	0.101	100	100	1.8	0	471	258	468	496	518	442	854	500	72	50	73	52	68	-0.066	9.44	0.04
83	13.293	13.319	0.16	0.16	1.28	79	3.17	1.13	80	2.3	100	0.102	100	99	1.7	-0.1	468	258	465	495	518	441	851	499	72	50	73	52	67	-0.066	9.2	0.04
84	13.454	13.481	0.16	0.16	1.27	79	3.16	1.13	80	2.3	100	0.102	99	100	1.7	0	466	258	462	493	517	439	851	498	72	50	73	52	67	-0.067	9.14	0.05
85	13.614	13.641	0.16	0.16	1.28	79	3.16	1.12	80	2.3	100	0.101	99	99	1.6	-0.1	464	258	459	492	517	438	861	500	72	50	73	52	67	-0.067	9.02	0.06
86	13.775	13.802	0.16	0.16	1.29	79	3.17	1.13	80	2.3	100	0.103	99	99	1.6	0	462	258	455	490	516	436	859	500	72	50	73	52	67	-0.066	9.17	0.05
87	13.937	13.964	0.16	0.16	1.28	79	3.16	1.13	80	2.3	99	0.102	100	100	1.6	0	460	258	452	489	515	435	856	499	72	50	72	52	68	-0.067	9.06	0.06
88	14.098	14.125	0.16	0.16	1.29	80	3.16	1.13	80	2.3	100	0.102	99	99	1.5	-0.1	458	257	449	488	514	433	851	497	72	50	72	52	67	-0.066	8.86	0.05
89	14.260	14.286	0.16	0.16	1.28	80	3.17	1.12	80	2.3	99	0.102	100	99	1.5	0	455	257	447	486	513	432	846	496	72	50	72	52	67	-0.066	8.82	0.05
90	14.421	14.447	0.16	0.16	1.28	80	3.17	1.13	80	2.3	99	0.103	99	98	1.4	-0.1	452	258	444	485	512	430	846	495	72	50	72	52	68	-0.066	8.87	0.05
91	14.582	14.609	0.16	0.16	1.28	80	3.16	1.13	80	2.3	99	0.101	100	100	1.4	0	450	257	442	484	510	429	842	494	72	50	72	52	67	-0.066	8.86	0.05
92	14.743	14.770	0.16	0.16	1.28	80	3.16	1.12	80	2.3	99	0.101	100	99	1.3	-0.1	447	257	440	483	509	427	841	493	72	50	72	52	67	-0.065	8.91	0.05
93	14.904	14.930	0.16	0.16	1.28	80	3.17	1.13	80	2.3	99	0.103	99	98	1.3	0	445	257	438	482	508	426	837	491	72	50	72	53	67	-0.065	8.78	0.05
94	15.065	15.091	0.16	0.16	1.28	80	3.15	1.13	80	2.3	99	0.102	99	99	1.2	-0.1	442	257	437	480	506	424	833	489	72	50	72	53	67	-0.065	8.73	0.04
95	15.227	15.253	0.16	0.16	1.28	80	3.15	1.12	80	2.3	99	0.102	100	100	1.2	0	440	257	435	479	505	423	829	487	72	50	72	53	67	-0.065	8.75	0.04
96	15.388	15.414	0.16	0.16	1.28	80	3.17	1.12	80	2.3	98	0.102	99	99	1.2	0	437	257	434	478	504	422	824	485	72	50	72	53	67	-0.065	8.63	0.04
97	15.549	15.575	0.16	0.16	1.28	80	3.16	1.13	80	2.3	99	0.101	100	99	1.1	-0.1	434	257	433	476	502	420	820	484	72	51	72	53	67	-0.065	8.48	0.04
98	15.710	15.737	0.16	0.16	1.29	80	3.16	1.13	80	2.3	98	0.102	99	99	1.1	0	432	257	432	475	501	419	822	485	72	51	72	53	67	-0.065	8.4	0.05
99	15.871	15.898	0.16	0.16	1.28	80	3.17	1.12	80	2.3	98	0.099	100	100	1.1	0	430	256	432	474	499	418	823	486	72	51	72	53	67	-0.065	8.27	0.05
100	16.033	16.059	0.16	0.16	1.29	80	3.17	1.13	80	2.3	98	0.101	100	99	1.0	-0.1	427	257	431	473	498	417	816	484	72	51	72	53	67	-0.065	8.26	0.05
101	16.195	16.220	0.16	0.16	1.28	80	3.17	1.13	80	2.3	98	0.102	100	99	1.0	0	425	256	429	471	497	416	807	481	72	51	72	53	67	-0.065	7.85	0.05
102	16.356	16.382	0.16	0.16	1.28	80	3.17	1.12	80	2.3	98	0.101	99	100	0.9	-0.1	422	257	428	470	495	414	799	478	72	51	72	53	67	-0.065	7.71	0.05
103	16.517	16.543	0.16	0.16	1.28	80	3.17	1.12	80	2.3	97	0.102	99	99	0.9	0	419	256	427	468	493	413	795	476	72	51	72	53	67	-0.065	7.7	0.06
104	16.678	16.704	0.16	0.16	1.28	80	3.17	1.13	80	2.3	97	0.102	99	99	0.9	0	416	256	425	467	492	411	791	475	72	51	72	53	67	-0.064	7.67	0.06
105	16.839	16.865	0.16	0.16	1.28	80	3.18	1.13	80	2.3	97	0.102	99	99	0.9	0	413	256	423	465	490	409	787	474	72	51	72	53	67	-0.064	7.6	0.06
106	17.000	17.027	0.16	0.16	1.28	80	3.17	1.13	80	2.3	97	0.102	99	99	0.8	-0.1	410	256	421	464	489	408	782	472	72	51	72	53	67	-0.064	7.6	0.06
107	17.163	17.188	0.16	0.16	1.28	80	3.17	1.12	80	2.3	97	0.102	100	99	0.8	0	407	255	419	462	487	406	770	468	72	51	72	53	67	-0.064	7.51	0.05

Wood Heater Test Data

Run: 1

Manufacturer: Kuma
Model: K-181
Tracking No.: 2461
Project No.: 0123WM013E
Test Date: 12-Dec-22
Beginning Clock Time: 13:42

Total Sampling Time: 131 min
Recording Interval: 1 min
Background Sample Volume: 26.262 cubic feet

Meter Box Y Factor: 1.004 (1) 1.002 (2) 1.016 (Amb)

Barometric Pressure:	Begin	Middle	End	Average	
	30.07	30.09	30.09	30.08	0

OMNI Equipment Numbers:

PM Control Modules: 335, 00336
Dilution Tunnel MW(dry): 29.00 lb/lb-mole
Dilution Tunnel MW(wet): 28.78 lb/lb-mole
Dilution Tunnel H2O: 2.00 percent
Dilution Tunnel Static: -0.310 "H2O
Tunnel Area: 0.19625 ft2
Pitot Tube Cp: 0.99

Avg. Tunnel Velocity: 18.83 ft/sec.
Initial Tunnel Flow: 205.1 scfm
Average Tunnel Flow: 204.3 scfm
Post-Test Leak Check (1): 0.000 cfm @ 14 in. Hg
Post-Test Leak Check (2): 0.000 cfm @ 12 in. Hg
Average Test Piece Fuel Moisture: 22.17 Dry Basis %

Technician Signature:_____

Export to PDF

Velocity Traverse Data

	Pt.1	Pt.2	Pt.3	Pt.4	Pt.5	Pt.6	Pt.7	Pt.8	Center	
Initial dP	0.084	0.086	0.082	0.068	0.062	0.076	0.082	0.072	0.102	"H2O
Temp:	102	102	104	103	103	103	102	102	101	°F

V_{strav} 18.85 ft/sec V_{scent} 21.77 ft/sec F_p 0.866

	Particulate Sampling Data														Fuel Weight (lb)		Temperature Data (°F)												Stack Gas Data		
Elapsed Time (min)	Gas Meter 1 (ft^3)	Gas Meter 2 (ft^3)	Sample Rate 1 (cfm)	Sample Rate 2 (cfm)	Orifice dH 1 ("H_2O)	Meter 1 Temp (°F)	Meter 1 Vacuum ("Hg)	Orifice dH 2 ("H_2O)	Meter 2 Temp (°F)	Meter 2 Vacuum ("Hg)	Dilution Tunnel (°F)	Dilution Tunnel Center dP	Pro. Rate 1	Pro. Rate 2	Scale Reading	Weight Change	Firebox Top	Firebox Bottom	Firebox Back	Firebox Left	Firebox Right	Avg. Stove Surface	Catalyst Exit	Stack	Filter 1	Dryer Exit 1	Filter 2	Dryer Exit 2	Ambient	Draft ("H_2O)	CO_2 (%)	CO (%)
108	17.324	17.349	0.16	0.16	1.28	80	3.17	1.13	80	2.3	97	0.103	98	98	0.8	0	403	255	418	461	486	405	762	464	72	51	72	53	67	-0.063	7.54	0.05
109	17.485	17.511	0.16	0.16	1.28	80	3.16	1.12	80	2.3	97	0.101	99	100	0.7	-0.1	399	255	416	459	484	403	753	460	72	51	72	53	67	-0.063	7.65	0.04
110	17.646	17.672	0.16	0.16	1.28	80	3.17	1.12	80	2.3	96	0.101	99	99	0.7	0	396	255	414	457	483	401	749	458	72	51	72	53	67	-0.062	7.81	0.04
111	17.807	17.833	0.16	0.16	1.28	80	3.17	1.13	80	2.3	96	0.101	99	99	0.7	0	392	255	413	455	481	399	747	455	72	51	72	53	67	-0.062	7.91	0.04
112	17.968	17.994	0.16	0.16	1.29	80	3.16	1.13	80	2.3	96	0.102	99	99	0.6	-0.1	390	254	412	454	480	398	745	452	72	51	72	53	67	-0.062	7.92	0.03
113	18.131	18.156	0.16	0.16	1.29	80	3.16	1.13	80	2.3	96	0.101	100	100	0.6	0	387	254	411	453	479	397	745	452	72	51	72	53	67	-0.062	8	0.04
114	18.292	18.317	0.16	0.16	1.29	80	3.16	1.12	80	2.3	96	0.102	99	99	0.6	0	385	254	409	451	477	395	748	452	72	51	72	53	66	-0.062	7.93	0.04
115	18.453	18.478	0.16	0.16	1.28	80	3.17	1.13	80	2.3	95	0.103	98	98	0.5	-0.1	383	254	408	450	476	394	751	452	72	51	72	53	66	-0.062	7.96	0.04
116	18.614	18.639	0.16	0.16	1.29	80	3.16	1.13	80	2.3	95	0.104	98	98	0.5	0	382	253	408	448	475	393	752	452	72	51	71	53	65	-0.063	7.87	0.04
117	18.775	18.801	0.16	0.16	1.29	80	3.16	1.13	80	2.3	95	0.104	98	98	0.5	0	380	254	407	447	474	392	760	452	72	51	71	53	65	-0.063	7.78	0.04
118	18.937	18.962	0.16	0.16	1.29	80	3.15	1.13	80	2.3	94	0.104	98	98	0.4	-0.1	379	254	406	445	472	391	768	454	71	51	71	53	65	-0.063	7.84	0.04
119	19.099	19.124	0.16	0.16	1.29	80	3.15	1.13	80	2.3	94	0.102	99	99	0.4	0	379	253	406	444	472	391	775	456	71	51	71	53	64	-0.063	7.95	0.04
120	19.262	19.286	0.16	0.16	1.28	80	3.16	1.13	80	2.3	94	0.102	100	99	0.4	0	379	253	405	442	470	390	776	457	71	51	71	53	65	-0.063	7.99	0.05
121	19.423	19.447	0.16	0.16	1.28	79	3.16	1.13	80	2.3	95	0.104	98	98	0.4	0	379	254	405	442	470	390	774	457	71	51	70	53	64	-0.063	7.95	0.05
122	19.584	19.608	0.16	0.16	1.29	79	3.17	1.13	80	2.3	95	0.105	97	97	0.3	-0.1	379	253	404	441	469	389	774	458	71	51	70	53	65	-0.063	7.7	0.05
123	19.746	19.770	0.16	0.16	1.29	79	3.17	1.12	80	2.3	95	0.103	99	99	0.3	0	379	254	404	439	468	389	777	458	71	51	70	53	65	-0.063	7.71	0.05
124	19.907	19.932	0.16	0.16	1.29	79	3.15	1.13	80	2.3	95	0.105	97	98	0.3	0	378	254	403	438	467	388	776	457	71	51	70	53	65	-0.063	7.7	0.05
125	20.068	20.093	0.16	0.16	1.29	79	3.17	1.12	80	2.3	95	0.102	99	99	0.2	-0.1	378	253	402	437	466	387	775	458	71	51	70	53	65	-0.063	7.65	0.06
126	20.231	20.254	0.16	0.16	1.29	79	3.17	1.13	79	2.3	95	0.103	100	98	0.2	0	378	254	401	436	466	387	770	456	71	51	70	53	66	-0.063	7.45	0.05
127	20.393	20.415	0.16	0.16	1.29	79	3.17	1.13	79	2.3	95	0.103	99	98	0.2	0	377	253	400	435	465	386	767	455	71	51	70	53	66	-0.062	7.32	0.06
128	20.554	20.577	0.16	0.16	1.28	79	3.17	1.13	79	2.3	95	0.101	99	100	0.2	0	376	253	400	434	464	385	764	455	71	51	70	53	66	-0.063	7.27	0.06
129	20.715	20.738	0.16	0.16	1.28	79	3.17	1.12	79	2.3	95	0.102	99	99	0.1	-0.1	375	253	398	432	463	384	760	455	71	51	70	53	66	-0.062	7.21	0.06
130	20.876	20.899	0.16	0.16	1.29	79	3.16	1.13	79	2.3	95	0.102	99	99	0.1	0	373	254	397	431	463	384	759	454	71	51	70	53	66	-0.063	7.15	0.06
131	21.038	21.061	0.16	0.16	1.28	79	3.16	1.13	79	2.3	95	0.099	101	101	0.0	-0.1	372	254	396	430	462	383	758	454	71	51	70	53	66	-0.062	7.14	0.06
Avg/Tot	21.038	21.061	0.16	0.16	1.27	78		1.12	78		104	0.101	100	100								75.4			47	72	49	67	-0.069		

Wood Heater Lab Data - ASTM E2780 / ASTM E2515

Manufacturer:	Kuma	Equipment Numbers:	
Model:	K-181		
Tracking No.:	2461		
Project No.:	0123WM013E		
Run #:	1		
Date:	12/12/22		

TRAIN 1 (First Hour emissions)

Sample Component	Reagent	Filter, Probe or Dish #	Weights		
			Final, mg	Tare, mg	Particulate, mg
B. Front filter catch	Filter	E844	120.4	118.9	1.5
C. Rear filter catch	Filter	E845	118.4	118.4	0.0
D. Probe catch*	Probe	68	116877.8	116877.7	0.1
E. Filter seals catch*	Seals	S437	3451.5	3451.3	0.2

Sub-Total

Total Particulate, mg:	1.8

TRAIN 1 (Post First Hour Change-out)

Sample Component	Reagent	Filter, Probe or Dish #	Weights		
			Final, mg	Tare, mg	Particulate, mg
B. Front filter catch	Filter	E846	118.0	118.4	-0.4
C. Rear filter catch	Filter	E847	118.3	118.5	-0.2
D. Probe catch*	Probe	13	114321.1	114320.8	0.3
E. Filter seals catch*	Seals	S438	3414.4	3413.9	0.5

Sub-Total

Total Particulate, mg:	0.2

Train 1 Aggregate

Total Particulate, mg:	**2.0**

TRAIN 2

Sample Component	Reagent	Filter, Probe or Dish #	Weights		
			Final, mg	Tare, mg	Particulate, mg
A. Front filter catch	Filter	E850	120.2	119.0	1.2
B. Rear filter catch	Filter	E849	119.3	119.3	0.0
C. Probe catch*	Probe	78	117459.1	117458.9	0.2
D. Filter seals catch*	Seals	S439	3374.8	3374.4	0.4

Total Particulate, mg:	**1.8**

AMBIENT

Sample Component	Reagent	Filter # or Probe #	Weights		
			Final, mg	Tare, mg	Particulate, mg
A. Front filter catch*	Filter	E851	118.7	118.9	0.0

Total Particulate, mg:	**0.0**

*Particulate catch that results in a negative number, is assumed to be zero for probes and seals, negative numbers for filters are assumed to be part of the seal weight.

Component	Equations:
A. Front filter catch	Final (mg) - Tare (mg) = Particulate, mg
B. Rear filter catch	Final (mg) - Tare (mg) = Particulate, mg
C. Probe catch	Final (mg) - Tare (mg) = Particulate, mg

Technician Signature:_____

Wood Heater Test Results - ASTM E2780 / ASTM E2515

Manufacturer:	Kuma
Model:	K-181
Project No.:	0123WM013E
Tracking No.:	2461
Run:	1
Test Date:	12/12/22

Burn Rate	**2.18**	**kg/hr dry**
Average Tunnel Temperature	104	degrees Fahrenheit
Average Gas Velocity in Dilution Tunnel - vs	18.83	feet/second
Average Gas Flow Rate in Dilution Tunnel - Qsd	12255.4	dscf/hour
Average Delta p	0.101	inches H20
Total Time of Test	131	minutes

	AMBIENT	SAMPLE TRAIN 1	SAMPLE TRAIN 2	FIRST HOUR FILTER (TRAIN 1)
Total Sample Volume - Vm	26.262 cubic feet	21.038 cubic feet	21.061 cubic feet	9.575 cubic feet
Average Gas Meter Temperature	67 degrees Fahrenheit	78 degrees Fahrenheit	78 degrees Fahrenheit	76 degrees Fahrenheit
Total Sample Volume (Standard Conditions) - Vmstd	26.857 dscf	20.897 dscf	20.872 dscf	9.540 dscf
Total Particulates - m_n	0 mg	2 mg	1.8 mg	1.8 mg
Particulate Concentration (dry-standard) - C_r/C_s	0.000000 grams/dscf	0.00010 grams/dscf	0.00009 grams/dscf	0.00019 grams/dscf
Total Particulate Emissions - E_T	0.00 grams	2.56 grams	2.31 grams	2.31 grams
Particulate Emission Rate	0.00 grams/hour	1.17 grams/hour	1.06 grams/hour	2.31 grams/hour
Emissions Factor		0.54 g/kg	0.49 g/kg	0.65 g/kg
Difference from Average Total Particulate Emissions		0.13 grams	0.13 grams	

Dual Train Comparison Results Are Acceptable

FINAL AVERAGE RESULTS

Complete Test Run		
Total Particulate Emissions - E_T	2.43	grams
Particulate Emission Rate	**1.11**	**grams/hour**
Emissions Factor	0.51	grams/kg
First Hour Emissions		
Total Particulate Emissions - E_T	2.31	grams
Particulate Emission Rate	2.31	grams/hour
Emissions Factor	0.65	grams/kg
7.5% of Average Total Particulate Emissions	0.18	grams

QUALITY CHECKS

Filter Temps < 90 °F	OK
Filter Face Velocity (47 mm)	OK
Dryer Exit Temp < 80F	OK
Leakage Rate	OK
Ambient Temp (55-90°F)	OK
Negative Probe Weight Eval.	OK
Pro-Rate Variation	OK
Stove Surface ΔT	OK
Train Precesion 7.5%	5.20
Train Precision 0.5g/kg	0.05

Technician Signature:_____

Wood Heater Lab Data - ASTM E2780 / ASTM E2515

Manufacturer:	Kuma	Equipment Numbers:	
Model:	K-181		
Tracking No.:	2461		
Project No.:	0123WM013E		
Run #:	1		
Date:	12/12/22		

Uncorrected

TRAIN 1 (First Hour emissions)

Sample Component	Reagent	Filter, Probe or Dish #	Weights		
			Final, mg	Tare, mg	Particulate, mg
B. Front filter catch	Filter	E844	120.4	118.9	1.5
C. Rear filter catch	Filter	E845	118.4	118.4	0.0
D. Probe catch*	Probe	68	116877.8	116877.7	0.1
E. Filter seals catch*	Seals	S437	3451.5	3451.3	0.2

Sub-Total

Total Particulate, mg:	1.8

TRAIN 1 (Post First Hour Change-out)

Sample Component	Reagent	Filter, Probe or Dish #	Weights		
			Final, mg	Tare, mg	Particulate, mg
B. Front filter catch	Filter	E846	118.0	118.4	0.0
C. Rear filter catch	Filter	E847	118.3	118.5	0.0
D. Probe catch*	Probe	13	114321.1	114320.8	0.3
E. Filter seals catch*	Seals	S438	3414.4	3413.9	0.5

Sub-Total

Total Particulate, mg:	0.8

Train 1 Aggregate

Total Particulate, mg:	**2.6**

TRAIN 2

Sample Component	Reagent	Filter, Probe or Dish #	Weights		
			Final, mg	Tare, mg	Particulate, mg
A. Front filter catch	Filter	E850	120.2	119.0	1.2
B. Rear filter catch	Filter	E849	119.3	119.3	0.0
C. Probe catch*	Probe	78	117459.1	117458.9	0.2
D. Filter seals catch*	Seals	S439	3374.8	3374.4	0.4

Total Particulate, mg:	**1.8**

AMBIENT

Sample Component	Reagent	Filter # or Probe #	Weights		
			Final, mg	Tare, mg	Particulate, mg
A. Front filter catch*	Filter	E851	118.7	118.9	0.0

Total Particulate, mg:	**0.0**

*Particulate catch that results in a negative number, is assumed to be zero for probes and seals, negative numbers for filters are assumed to be part of the seal weight.

Component	Equations:
A. Front filter catch	Final (mg) - Tare (mg) = Particulate, mg
B. Rear filter catch	Final (mg) - Tare (mg) = Particulate, mg
C. Probe catch	Final (mg) - Tare (mg) = Particulate, mg

Technician Signature:_____

Wood Heater Test Results - ASTM E2780 / ASTM E2515

Manufacturer:	Kuma
Model:	K-181
Project No.:	0123WM013E
Tracking No.:	2461
Run:	1
Test Date:	12/12/22

Burn Rate	**2.18**	**kg/hr dry**
Average Tunnel Temperature	104	degrees Fahrenheit
Average Gas Velocity in Dilution Tunnel - vs	18.83	feet/second
Average Gas Flow Rate in Dilution Tunnel - Qsd	12255.4	dscf/hour
Average Delta p	0.101	inches H20
Total Time of Test	131	minutes

Uncorrected

	AMBIENT	SAMPLE TRAIN 1	SAMPLE TRAIN 2	FIRST HOUR FILTER (TRAIN 1)
Total Sample Volume - Vm	26.262 cubic feet	21.038 cubic feet	21.061 cubic feet	9.575 cubic feet
Average Gas Meter Temperature	67 degrees Fahrenheit	78 degrees Fahrenheit	78 degrees Fahrenheit	76 degrees Fahrenheit
Total Sample Volume (Standard Conditions) - Vmstd	26.857 dscf	20.897 dscf	20.872 dscf	9.540 dscf
Total Particulates - m_n	0 mg	2.6 mg	1.8 mg	1.8 mg
Particulate Concentration (dry-standard) - C_r/C_s	0.000000 grams/dscf	0.00012 grams/dscf	0.00009 grams/dscf	0.00019 grams/dscf
Total Particulate Emissions - E_T	0.00 grams	3.33 grams	2.31 grams	2.31 grams
Particulate Emission Rate	0.00 grams/hour	1.52 grams/hour	1.06 grams/hour	2.31 grams/hour
Emissions Factor		0.70 g/kg	0.49 g/kg	0.65 g/kg
Difference from Average Total Particulate Emissions		0.51 grams	0.51 grams	

Dual Train Comparison Results Are Acceptable

FINAL AVERAGE RESULTS

Complete Test Run		
Total Particulate Emissions - E_T	2.82	grams
Particulate Emission Rate	**1.29**	**grams/hour**
Emissions Factor	0.59	grams/kg
First Hour Emissions		
Total Particulate Emissions - E_T	2.31	grams
Particulate Emission Rate	2.31	grams/hour
Emissions Factor	0.65	grams/kg
7.5% of Average Total Particulate Emissions	0.21	grams

QUALITY CHECKS

Filter Temps < 90 °F	OK
Filter Face Velocity (47 mm)	OK
Dryer Exit Temp < 80F	OK
Leakage Rate	OK
Ambient Temp (55-90°F)	OK
Negative Probe Weight Eval.	OK
Pro-Rate Variation	OK
Stove Surface ΔT	OK
Train Precesion 7.5%	18.12
Train Precision 0.5g/kg	0.21

Technician Signature:_____

VERSION: 2.4 4/15/2010

Manufacturer: Kuma Industries
Model: K-181
Date: 12/12/2022
Run: 1
Control #: 0123WM013E
Test Duration: 131
Output Category: 4

Appliance Type: Cat (Cat, Non-Cat, Pellet)

Temp. Units F (F or C)
Weight Units lb (kg or lb)

Wood Moisture (% wet): 18.15
Load Weight (lb wet): 12.80
Burn Rate (dry kg/h): 2.18
Total Particulate Emissions: 2.43 g

Fuel Data

	D. Fir	
HHV	19,810	kJ/kg
%C	48.73	
%H	6.87	
%O	43.9	
%Ash	0.5	

Default Fuel Values

	D. Fir	Oak
HHV (kJ/kg)	19,810	19,887
%C	48.73	50
%H	6.87	6.6
%O	43.9	42.9
%Ash	0.5	0.5

Note 1: For other fuels, use the heating value and fuel composition determined by analysis of fuel sample in accordance with Clause 9.2.

Note 2: In cases where the "Fuel Weight Remaining" is the same for three or more readings in a row, a "divide by zero error" will occur in the calculation sheet. In such cases, adjust the weight values by interpolation between the first occurence and the next reading showing a decrease in weight.

Averages	**0.21**	**11.62**	**#DIV/0!**	**527.80**	**67.22**	
				Temp. (ºF)		
Elapsed Time (min)	Fuel Weight Remaining (lb)	Flue Gas Composition (%) CO	CO_2	O_2	Flue Gas	Room Temp
0	12.80	0.04	5.45		455.0	70.0
1	12.70	0.22	1.29		396.0	70.0
2	12.60	0.14	1.43		413.0	70.0
3	12.50	0.06	7.20		418.0	69.0
4	12.40	0.11	11.21		469.0	69.0
5	12.20	0.20	12.88		511.0	69.0
6	12.00	0.25	13.97		544.0	69.0
7	11.90	0.23	15.09		566.0	68.0
8	11.70	0.27	15.19		583.0	68.0
9	11.50	0.59	15.49		592.0	69.0
10	11.30	0.46	15.76		597.0	68.0
11	11.10	0.54	15.92		600.0	68.0
12	10.90	0.71	15.98		604.0	68.0
13	10.70	0.91	16.20		606.0	68.0
14	10.50	0.96	16.42		609.0	68.0
15	10.30	0.84	16.33		609.0	68.0
16	10.10	0.96	16.48		611.0	68.0
17	9.90	0.90	16.51		610.0	68.0
18	9.70	0.97	16.65		609.0	69.0

19	9.50	1.12	16.77		611.0	68.0
20	9.30	1.12	16.92		612.0	68.0
21	9.00	1.26	17.16		613.0	68.0
22	8.80	1.28	17.24		613.0	68.0
23	8.60	1.30	17.24		613.0	68.0
24	8.40	1.23	17.40		613.0	68.0
25	8.20	1.09	17.62		612.0	68.0
26	8.00	1.06	17.82		614.0	69.0
27	7.80	1.04	17.83		614.0	69.0
28	7.60	0.94	17.92		614.0	69.0
29	7.40	0.75	17.83		615.0	68.0
30	7.20	0.70	17.79		614.0	68.0
31	7.00	0.61	17.92		616.0	68.0
32	6.90	0.37	17.97		617.0	68.0
33	6.70	0.24	17.66		615.0	68.0
34	6.50	0.19	17.41		614.0	68.0
35	6.30	0.14	17.04		610.0	68.0
36	6.20	0.11	16.82		608.0	68.0
37	6.00	0.09	16.65		605.0	67.0
38	5.90	0.06	16.37		602.0	67.0
39	5.70	0.06	16.05		599.0	67.0
40	5.60	0.04	15.83		596.0	66.0
41	5.40	0.03	15.53		592.0	65.0
42	5.30	0.05	15.44		589.0	66.0
43	5.20	0.04	15.34		587.0	66.0
44	5.00	0.04	15.32		586.0	66.0
45	4.90	0.05	15.45		584.0	66.0
46	4.80	0.06	15.41		584.0	67.0
47	4.60	0.06	15.41		584.0	67.0
48	4.50	0.03	14.50		584.0	67.0
49	4.40	0.01	14.19		583	67
50	4.30	0.01	13.89		577	67
51	4.10	0.01	13.75		572	67
52	4.00	0.01	13.77		568	67
53	3.90	0.01	13.68		565	67
54	3.80	0	13.49		561	67
55	3.70	0.01	13.03		558	67
56	3.60	0.01	12.58		554	67
57	3.50	0.01	12.49		550	67

58	3.40	0.01	12.25		546	68
59	3.30	0.01	12.3		542	67
60	3.20	0.01	12.26		538	67
61	3.10	0.01	12.23		537	68
62	3.10	0	11.89		533	67
63	3.00	0.01	11.74		530	68
64	2.90	0.01	11.58		527	67
65	2.80	0.01	11.48		525	67
66	2.80	0.01	11.32		522	67
67	2.70	0.01	11.09		520	68
68	2.60	0.02	10.45		517	69
69	2.60	0.02	10.55		514	67
70	2.50	0.02	10.68		513	67
71	2.40	0.03	10.57		511	67
72	2.40	0.02	10.51		510	67
73	2.30	0.02	10.38		507	68
74	2.20	0.03	10.15		506	68
75	2.20	0.03	9.95		506	69
76	2.10	0.04	9.84		506	67
77	2.10	0.04	9.78		506	67
78	2.00	0.04	9.72		506	67
79	2.00	0.04	9.78		504	67
80	1.90	0.04	9.74		503	68
81	1.80	0.04	9.57		501	67
82	1.80	0.04	9.44		500	68
83	1.70	0.04	9.2		499	67
84	1.70	0.05	9.14		498	67
85	1.60	0.06	9.02		500	67
86	1.60	0.05	9.17		500	67
87	1.60	0.06	9.06		499	68
88	1.50	0.05	8.86		497	67
89	1.50	0.05	8.82		496	67
90	1.40	0.05	8.87		495	68
91	1.40	0.05	8.86		494	67
92	1.30	0.05	8.91		493	67
93	1.30	0.05	8.78		491	67
94	1.20	0.04	8.73		489	67
95	1.20	0.04	8.75		487	67
96	1.20	0.04	8.63		485	67

97	1.10	0.04	8.48		484	67
98	1.10	0.05	8.4		485	67
99	1.10	0.05	8.27		486	67
100	1.00	0.05	8.26		484	67
101	1.00	0.05	7.85		481	67
102	0.90	0.05	7.71		478	67
103	0.90	0.06	7.7		476	67
104	0.90	0.06	7.67		475	67
105	0.90	0.06	7.6		474	67
106	0.80	0.06	7.6		472	67
107	0.80	0.05	7.51		468	67
108	0.80	0.05	7.54		464	67
109	0.70	0.04	7.65		460	67
110	0.70	0.04	7.81		458	67
111	0.70	0.04	7.91		455	67
112	0.60	0.03	7.92		452	67
113	0.60	0.04	8		452	67
114	0.60	0.04	7.93		452	66
115	0.50	0.04	7.96		452	66
116	0.50	0.04	7.87		452	65
117	0.50	0.04	7.78		452	65
118	0.40	0.04	7.84		454	65
119	0.40	0.04	7.95		456	64
120	0.40	0.05	7.99		457	65
121	0.40	0.05	7.95		457	64
122	0.30	0.05	7.7		458	65
123	0.30	0.05	7.71		458	65
124	0.30	0.05	7.7		457	65
125	0.20	0.06	7.65		458	65
126	0.20	0.05	7.45		456	66
127	0.20	0.06	7.32		455	66
128	0.20	0.06	7.27		455	66
129	0.10	0.06	7.21		455	66
130	0.10	0.06	7.15		454	66
131	0.00	0.06	7.14		454	66

ABC Laboratories, Inc.

Manufacturer: Kuma Industries
Model: K-181
Date: 12/12/22
Run: 1
Control #: 0123WM013E
Test Duration: 131
Output Category: 4

Technicians: _____

_____

_____

Test Results in Accordance with CSA B415.1-10

	HHV Basis	LHV Basis
Overall Efficiency	71.3%	77.0%
Combustion Efficiency	98.1%	98.1%
Heat Transfer Efficiency	73%	78.5%

Output Rate (kJ/h)	30,732	29,153	**(Btu/h)**
Burn Rate (kg/h)	2.18	4.80	**(lb/h)**
Input (kJ/h)	43,130	40,914	**(Btu/h)**

Test Load Weight (dry kg)	4.75	10.48	**dry lb**
MC wet (%)	18.15		
MC dry (%)	22.17		
Particulate (g)	2.43		
CO (g)	134		
Test Duration (h)	2.18		

Emissions	**Particulate**	**CO**
g/MJ Output	0.04	2.00
g/kg Dry Fuel	0.51	28.25
g/h	1.11	61.50
lb/MM Btu Output	0.08	4.65

Air/Fuel Ratio (A/F)	9.59

VERSION: **2.4** **4/15/2010**

6OMNI-Test Laboratories, Inc. **ASTM E2780 Wood Heater Run Sheets**

Client: Kuma Project Number: 0123WM013E Run Number: 1

Model: K-181 Tracking Number: 2461 Date: 12/12/2022

Test Crew: TT, BD

OMNI Equipment ID numbers: 00637, 00709, 00283A

ASTM E2515 Lab Sheet

Assembled By:

Tony Tong

Date/Time in Dessicator:

12/12/22, 16:15

	Weighing #1	Weighing #2	Weighing #3	Weighing #4	Weighing #5
Date/Time:	12/14/22, 14:40	12/20/22 9:30			
R/H %:	12.8	9.6			
Temp:	68.5	63.3			
200 mg Audit:	199.9	200.1			
2 g Audit:	2000.2	2000.3			
100 g Audit:	99997.9	99997.9			
Initials:	TT	TT			

Train	Element	ID #	Tare (mg)	Weight (mg)	Weight (mg)	Weight (mg)	Weight (mg)	Weight (mg)
A (First Hour)	Front Filter	E844	118.9	120.4	120.4			
	Rear Filter	E845	118.4	118.4	118.4			
	Probe	68	116877.7	116877.8	116877.8			
	O-Ring Set	S437	3451.3	3451.5	3451.5			
A (Remainder)	Front Filter	E846	118.4	118.1	118.0			
	Rear Filter	E847	118.5	118.3	118.3			
	Probe	13	114320.8	114321.1	114321.1			
	O-Ring Set	S438	3413.9	3414.3	3414.4			
B	Front Filter	~~E848~~ 858	~~118.5~~ 119.0	120.3	120.2			
	Rear Filter	E849	119.3	119.3	119.3			
	Probe	78	117458.9	117459.2	117459.1			
	O-Ring Set	S439	3374.4	3375.0	3374.8			
BG	Filter	E851	118.9	118.7	118.7			

Technician Signature: Tony Tong Date: 12/20/2022

6OMNI-Test Laboratories, Inc. **ASTM E2780 Wood Heater Run Sheets**

Client: Kuma Project Number: 0123WM013E Run Number: 1

Model: K-181 Tracking Number: 2461 Date: 12/12/2022

Test Crew: TT, BD

OMNI Equipment ID numbers: 00335, 00336, 00594, 00185

Wood Heater Run Notes

Air Control Settings

Primary: Fully Open

Secondary: Fixed

Tertiary/Pilot: NA

Fan: ~~Fan off for first 5 mins then on high~~

Preburn Notes

Time	Notes
10:00	loading first rick and kindling (8.5 lbs + 4.0 lbs)
11:30	Adding second rick 8.8 lbs at 1.2 lbs coal
12:42	Adding third rick 9.6 lbs @ 2.0 lbs coal
13:20	Leveled coal bed

Test Notes

Sketch test fuel configuration:

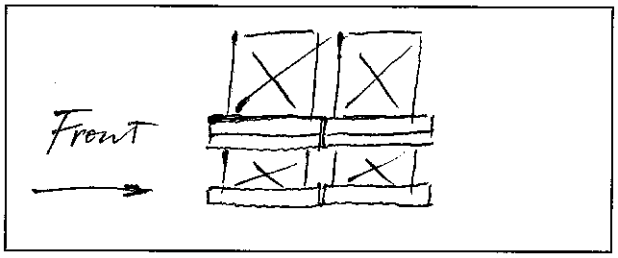

Start up procedures & Timeline:

Bypass: Used for fuel loading

Fuel loaded by: 60 seconds

Door closed at: 90 seconds

Primary air: Fully open

Notes: ~~Fan off for first 5 mins then set to high~~ for remainder of the test

Time	Notes
13:42	Test started
14:42	First hour filters changed
15:54	Test completed

Technician Signature: Tony Tong Date: 12/12/22

6OMNI-Test Laboratories, Inc. **ASTM E2780 Wood Heater Run Sheets**

Client: Kuma Project Number: 0123WM013E Run Number: 1

Model: K-181 Tracking Number: 2461 Date: 12/12/2022

Test Crew: TT, BD

OMNI Equipment ID numbers: 00594, 00335, 00336, 00410, 00716, 00322, 00255, 00677

Wood Heater Supplemental Data

Start Time: 1343 Booth #: E1

Stop Time: 1554

Stack Gas Leak Check:

Initial: good Final: good

Sample Train Leak Check:

~~A: 0.000 @ 14.37 "Hg~~

A: 0.000 @ 11.43 "Hg

B: 0.000 @ 11.53 "Hg

Calibrations: Span Gas CO_2: 16.94/10.08 CO: 4.32/2.53

	Pre Test		Post Test	
	Zero	Span	Zero	Span
Time	12:46	12:50	16:04	16:07
CO_2	0.00	16.94/10.08	0.00	16.92/10.07
CO	0.00	4.33/2.53	0.00	4.33/2.49

Air Velocity (ft/min): Initial: <50 Final: <50

Scale Audit (lbs): Initial: 10 Final: 10

Pitot Tube Leak Test: Initial: No leak Final: No leak

Stack Diameter (in): 6

Induced Draft: 0.001

% Smoke Capture: 100%

Flue Pipe Cleaned Prior to First Test in Series:

Date: 12/01/22 Initials: TT

	Initial	Middle	Ending
P_b (in/Hg)	30.07	30.09	30.09
RH (%)	42	41	41
Ambient (°F)	70	67	66

Tunnel Traverse

Microtector Reading	dP (in H_2O)	T(°F)
1	~~.13~~ .084	120
2	.086	102
3	.082	104
4	.088	103
5	.082	103
6	.076	103
7	.082	102
8	.072	102
Center:		
	.102	101

Tunnel Static Pressure (in H_2O):	
Beginning of Test	End of Test
-.31	-0.31

Background Filter Volume: 26.262 ft^3

Technician Signature: Tony Tong Date: 12/12/22

6OMNI-Test Laboratories, Inc. **ASTM E2780 Wood Heater Run Sheets**

Client: Kuma Project Number: 0123WM013E Run Number: 1

Model: K-181 Tracking Number: 2461 Date: 12/12/2022

Test Crew: TT, BD

OMNI Equipment ID numbers: 00340, 00431, I61, 00353

Wood Heater Fuel Data

Fuel: Douglas fir, untreated and air dried, standard grade or better dimensional lumber

Pre-Burn Fuel

Calibration: Cal Value (1) = 12% Actual Reading 12.6

Cal Value (2) = 22% Actual Reading 22.9

Piece:	Length:	Reading:	Piece:	Length:	Reading:
1	12 in	19.5	7	12 in	20.0
2	12 in	20.4	8	12 in	22.2
3	12 in	20.3	9	____ in	____
4	12 in	22.4	10	____ in	____
5	12 in	21.5	11	____ in	____
6	12 in	20.2	12	____ in	____

Total Pre-Burn Fuel Weight: 9.6 lbs Pre-Burn Fuel Average Moisture: ____

Time (clock): 12:20 Room Temperature (F): 70 Initials: TT

Test Fuel

Firebox Volume (ft³): 1.731

Load Weight Range (lb): ~~11.42~~ (10.9, 13.3)

Test Fuel Piece Length (in): 15 1/4"

Total Wet Fuel Load Weight (lb): 12.8 (2.56~3.2)

Fuel Type & Amount: 2 x 4: 2 4 x 4: 2

Weight (with spacers): 4.6 Weight (with spacers): 8.2

Piece:	Weight (lbs):	Moisture Readings (%DB):			Fuel Type:
1	1.8	19.8	21.2	22.6	2x4
2	1.7	22.2	22.1	19.4	2x4
3	3.9	24.8	20.5	23.8	4x4
4	3.7	22.8	24.9	21.4	4x4
5					
6					
7					

Spacer Moisture Readings (%DB)

18.9	22.3	19.8	21.2	20.0	19.4	19.3	21.4
21.7	18.3	20.0	21.4				

Time (clock): 12:30 Room Temperature (F): 70 Initials: TT

Technician Signature: Tony Tong Date: 12/12/22

Run 2

Medium Low Burn (Category II)

Wood Heater Preburn Data - ASTM E2780

Run: 2

Technician Signature:_____

Manufacturer:	Kuma
Model:	K-181
Tracking No.:	2461
Project No.:	0123WM013E
Test Date:	12/13/22
Beginning Clock Time:	11:20

Preburn Fuel Data

Fuel Piece Lengths (in.):	12		
Total Preburn Weight (lb):	9.5		
Fuel Moisture Readings (% DB):	19.7	20.1	19.9
	21.1	24.9	19.9
	22.7		
Avg Preburn Moisture (% DB):	**21.19**		

Coal Bed Range (lb):	**2.3** (min)	**2.8** (max)

			Temperatures (°F)							
Elapsed Time (min)	Scale (lb)	Stack Draft (in H_2O)	FB Top	FB Bottom	FB Back	FB Left	FB Right	Avg. FB	Stack	Ambient
0	4.8	-0.079	681	319	424	487	510	484	583	67
1	4.7	-0.077	692	322	436	491	515	491	514	67
2	4.5	-0.073	694	324	446	494	519	495	477	66
3	4.4	-0.071	695	325	453	498	522	499	453	67
4	4.3	-0.07	694	326	459	500	525	501	438	66
5	4.2	-0.069	694	327	464	502	527	503	426	66
6	4.1	-0.069	693	327	466	503	528	503	416	67
7	4	-0.068	692	328	469	505	529	505	408	67
8	3.9	-0.065	690	328	470	505	530	505	401	67
9	3.9	-0.065	688	329	471	505	530	505	394	66
10	3.8	-0.064	686	328	471	505	530	504	387	66
11	3.7	-0.063	683	328	471	505	529	503	381	67
12	3.7	-0.063	682	329	471	504	529	503	377	67
13	3.6	-0.062	680	329	470	504	528	502	373	67
14	3.5	-0.061	678	328	470	503	527	501	369	66
15	3.5	-0.059	676	328	469	502	526	500	365	66
16	3.4	-0.059	674	328	468	502	525	499	361	66
17	3.4	-0.058	670	328	468	501	524	498	356	66
18	3.3	-0.057	664	328	467	500	522	496	351	66
19	3.3	-0.058	658	327	466	500	521	494	347	66
20	3.2	-0.056	653	327	466	499	519	493	342	66
21	3.2	-0.055	646	327	465	498	517	491	337	66
22	3.2	-0.055	638	326	464	497	516	488	333	66
23	3.1	-0.055	630	326	464	496	514	486	329	67
24	3.1	-0.053	622	325	463	495	513	484	325	67
25	3.1	-0.053	613	325	462	494	511	481	321	66
26	3	-0.052	604	325	461	493	509	478	318	66
27	3	-0.052	595	324	460	492	507	476	314	66
28	3	-0.051	586	324	459	491	505	473	310	66
29	3	-0.051	578	323	458	490	503	470	307	66
30	2.9	-0.05	570	323	457	489	501	468	303	66
31	2.9	-0.049	563	323	456	488	499	466	300	66
32	2.9	-0.05	556	322	455	488	497	464	297	66
33	2.9	-0.048	549	322	454	487	495	461	293	66
34	2.8	-0.047	542	321	453	486	493	459	290	66
35	2.8	-0.046	535	321	452	485	491	457	288	66
36	2.8	-0.046	528	321	451	483	489	454	285	66
37	2.8	-0.046	521	321	450	482	487	452	282	66
38	2.8	-0.045	514	320	449	481	485	450	279	66
39	2.8	-0.045	507	320	447	480	482	447	276	66

Wood Heater Preburn Data - ASTM E2780

Run: 2

Technician Signature:_____

Manufacturer:	Kuma
Model:	K-181
Tracking No.:	2461
Project No.:	0123WM013E
Test Date:	12/13/22
Beginning Clock Time:	11:20

Preburn Fuel Data

Fuel Piece Lengths (in.):	12		
Total Preburn Weight (lb):	9.5		
Fuel Moisture Readings (% DB):	19.7	20.1	19.9
	21.1	24.9	19.9
	22.7		
Avg Preburn Moisture (% DB):	**21.19**		

Coal Bed Range (lb):	**2.3** (min)	**2.8** (max)

			Temperatures (°F)							
Elapsed Time (min)	Scale (lb)	Stack Draft (in H_2O)	FB Top	FB Bottom	FB Back	FB Left	FB Right	Avg. FB	Stack	Ambient
40	2.7	-0.045	501	320	446	478	480	445	274	66
41	2.7	-0.044	495	320	445	477	478	443	272	66
42	2.7	-0.044	488	319	443	475	476	440	269	66
43	2.7	-0.044	482	319	442	474	474	438	267	66
44	2.7	-0.044	476	319	440	472	472	436	264	66
45	2.7	-0.043	470	319	439	471	470	434	262	66
46	2.7	-0.042	464	319	438	469	467	431	260	65
47	2.7	-0.042	459	320	436	467	465	429	258	64
48	2.6	-0.042	454	319	434	464	463	427	256	64
49	2.6	-0.042	450	319	433	463	461	425	255	64
50	2.6	-0.042	446	319	431	461	459	423	254	64
51	2.6	-0.041	442	319	430	459	457	421	252	64
52	2.6	-0.041	439	318	428	457	455	419	252	63
53	2.6	-0.04	436	319	427	455	453	418	250	66
54	2.6	-0.039	434	320	425	453	451	417	249	67
55	2.6	-0.039	432	320	423	452	450	415	247	68
56	2.5	-0.039	430	320	422	450	448	414	246	69
57	2.5	-0.038	428	321	420	448	446	413	244	70
58	2.5	-0.038	426	321	418	446	444	411	243	70
59	2.5	-0.037	424	322	417	444	442	410	241	71
60	2.5	-0.037	422	322	415	442	441	408	240	71
61	2.5	-0.037	421	322	414	440	439	407	240	72
62	2.5	-0.036	419	322	412	439	437	406	238	72
63	2.5	-0.036	416	322	411	437	436	404	236	72
64	2.5	-0.035	413	322	409	435	434	403	235	72
65	2.4	-0.035	410	322	408	434	433	401	233	73
66	2.4	-0.035	407	322	406	433	431	400	232	73
67	2.4	-0.035	404	322	405	431	430	398	231	73
68	2.4	-0.035	401	322	404	430	428	397	230	73
69	2.4	-0.035	398	322	402	428	427	395	229	73
70	2.4	-0.035	395	322	401	427	425	394	228	72
71	2.4	-0.035	393	321	399	426	424	393	227	71
72	2.4	-0.035	391	321	398	424	422	391	227	71
73	2.3	-0.035	389	321	396	422	420	390	226	71

Wood Heater Test Fuel Data - ASTM E2780

Manufacturer:	Kuma
Model:	K-181
Tracking No.:	2461
Project No.:	0123WM013E
Test Date:	12/13/2022
Run No.:	2

Firebox Volume (ft^3):	1.731
Fuel Piece Length (in):	15.25
2x4 Crib Weight (lb):	4.1
4x4 Crib Weight (lb):	7.2

Total Fuel Weight (Dry Basis, lb):	9.4	
Fuel Density (lb/ft^3, Dry Basis):	26.92	OK
Loading Density (lb/ft^3, Wet Basis):	6.53	OK
2x4 Percentage:	36%	OK

Coal Bed Range (20-25%): **2.26 - 2.825**

Test Fuel Piece	Weight (lb)	Size	Readings (Dry Basis %)			Dry Weight (lb)
1	1.6	2"x 4"	20.4	19.3	21.5	1.33
2	1.6	2"x 4"	19.9	19.3	22.3	1.33
3	3.8	4"x 4"	21.3	24.3	24.8	3.08
4	3.1	4"x 4"	21.9	19.0	19.3	2.58

Spacer Readings (Dry Basis %)			
22.5	24.4	18.3	10.1
22.4	18.9	16.1	9.5
9.6	9.9	9.9	10.3

Technician Signature:_____

Wood Heater Test Data

u

Run: 2

Manufacturer: Kuma
Model: K-181
Tracking No.: 2461
Project No.: 0123WM013E
Test Date: 13-Dec-22
Beginning Clock Time: 12:35

Total Sampling Time: 279 min
Recording Interval: 1 min
Background Sample Volume: 57.64 cubic feet

Meter Box Y Factor: 1.004 (1) 1.002 (2) 1.016 (Amb)

Barometric Pressure:	Begin	Middle	End	Average	
	30.27	30.27	30.27	30.27	0

OMNI Equipment Numbers:

PM Control Modules: 335, 00336
Dilution Tunnel MW(dry): 29.00 lb/lb-mole
Dilution Tunnel MW(wet): 28.78 lb/lb-mole
Dilution Tunnel H2O: 2.00 percent
Dilution Tunnel Static: -0.290 "H2O
Tunnel Area: 0.19625 ft2
Pitot Tube Cp: 0.99

Avg. Tunnel Velocity: 17.89 ft/sec.
Initial Tunnel Flow: 202.3 scfm
Average Tunnel Flow: 204.1 scfm
Post-Test Leak Check (1): 0.000 cfm @ 14 in. Hg
Post-Test Leak Check (2): 0.000 cfm @ 17 in. Hg
Average Test Piece Fuel Moisture: 20.75 Dry Basis %

Technician Signature:_____

Export to PDF

Velocity Traverse Data	Pt.1	Pt.2	Pt.3	Pt.4	Pt.5	Pt.6	Pt.7	Pt.8	Center	
Initial dP	0.062	0.082	0.084	0.058	0.060	0.076	0.084	0.062	0.096	"H2O
Temp:	79	79	79	79	79	78	77	77	78	°F

V_{strav} 17.68 ft/sec V_{scent} 20.61 ft/sec F_p 0.858

	Particulate Sampling Data														Fuel Weight (lb)		Temperature Data (°F)												Stack Gas Data		
Elapsed Time (min)	Gas Meter 1 (ft^3)	Gas Meter 2 (ft^3)	Sample Rate 1 (cfm)	Sample Rate 2 (cfm)	Orifice dH 1 ("H_2O)	Meter 1 Temp (°F)	Meter 1 Vacuum ("Hg)	Orifice dH 2 ("H_2O)	Meter 2 Temp (°F)	Meter 2 Vacuum ("Hg)	Dilution Tunnel (°F)	Dilution Tunnel Center dP	Pro. Rate 1	Pro. Rate 2	Scale Reading	Weight Change	Firebox Top	Firebox Bottom	Firebox Back	Firebox Left	Firebox Right	Avg. Stove Surface	Catalyst Exit	Stack	Filter 1	Dryer Exit 1	Filter 2	Dryer Exit 2	Ambient	Draft ("H_2O)	CO_2 (%)	CO (%)
0	0.000	0.000			1.48	72	3	1.13	72	2.2	92	0.096			11.3		385	322	395	419	420	388	467	268	68	48	68	52	70	-0.035	2.36	0.37
1	0.160	0.159	0.16	0.16	1.55	72	3.07	1.15	72	2.3	111	0.097	104	104	11.2	-0.1	383	320	396	418	419	387	408	288	69	44	69	47	70	-0.045	1.03	0.26
2	0.333	0.321	0.17	0.16	1.54	72	3.06	1.15	72	2.3	92	0.097	110	104	11.1	-0.1	378	311	395	413	417	383	417	291	70	43	69	46	70	-0.051	5.56	0.65
3	0.508	0.483	0.18	0.16	1.53	72	3.05	1.15	72	2.3	89	0.098	111	103	11.1	0	376	305	394	410	415	380	509	309	70	43	69	46	70	-0.055	5.69	0.64
4	0.682	0.645	0.17	0.16	1.52	72	3.06	1.14	72	2.3	89	0.097	111	104	11.0	-0.1	380	300	393	408	413	379	650	359	70	43	69	46	70	-0.061	5.9	0.06
5	0.844	0.807	0.16	0.16	1.29	72	2.74	1.10	72	2.2	89	0.099	102	103	10.9	-0.1	385	297	390	404	411	377	692	388	70	44	69	46	70	-0.063	6.53	0.06
6	1.003	0.965	0.16	0.16	1.27	72	2.72	1.10	72	2.2	82	0.098	100	100	10.9	0	391	301	387	401	408	378	667	335	70	44	69	46	69	-0.051	6.78	0.03
7	1.161	1.124	0.16	0.16	1.28	72	2.71	1.10	73	2.2	81	0.099	99	100	10.9	0	394	303	384	398	405	377	655	304	70	44	69	46	69	-0.050	5.42	0.03
8	1.320	1.283	0.16	0.16	1.27	73	2.7	1.09	73	2.2	79	0.099	99	100	10.9	0	397	304	381	395	401	376	645	289	70	44	69	46	69	-0.050	5.41	0.03
9	1.479	1.442	0.16	0.16	1.26	73	2.71	1.10	73	2.2	78	0.099	99	100	10.8	-0.1	398	305	378	392	398	374	639	280	70	44	69	46	68	-0.049	5.51	0.03
10	1.638	1.602	0.16	0.16	1.26	73	2.69	1.10	73	2.2	77	0.098	99	101	10.8	0	399	306	374	389	394	372	636	275	70	44	69	47	69	-0.049	5.45	0.03
11	1.796	1.760	0.16	0.16	1.27	73	2.71	1.10	73	2.2	77	0.098	99	100	10.8	0	399	306	371	385	390	370	634	271	69	44	69	47	69	-0.049	5.51	0.04
12	1.955	1.918	0.16	0.16	1.26	73	2.7	1.09	73	2.2	79	0.099	99	99	10.7	-0.1	399	305	367	382	386	368	632	268	69	45	69	47	68	-0.047	5.5	0.03
13	2.114	2.078	0.16	0.16	1.26	73	2.7	1.09	73	2.2	79	0.098	100	101	10.7	0	398	305	364	378	383	366	634	267	69	45	69	47	68	-0.047	5.68	0.04
14	2.272	2.236	0.16	0.16	1.26	73	2.7	1.09	73	2.2	80	0.098	99	100	10.7	0	398	304	361	374	379	363	637	265	69	45	69	47	67	-0.046	5.82	0.04
15	2.431	2.395	0.16	0.16	1.27	73	2.69	1.09	73	2.2	81	0.097	100	101	10.7	0	398	303	357	371	375	361	636	264	69	45	69	47	67	-0.047	5.77	0.03
16	2.591	2.554	0.16	0.16	1.27	73	2.68	1.09	74	2.2	81	0.098	100	100	10.6	-0.1	398	303	354	367	372	359	626	263	69	45	69	47	67	-0.046	5.32	0.03
17	2.750	2.713	0.16	0.16	1.28	74	2.72	1.09	74	2.2	81	0.097	100	101	10.6	0	396	302	350	364	368	356	614	260	69	45	69	47	67	-0.046	5.23	0.04
18	2.910	2.872	0.16	0.16	1.28	74	2.72	1.08	74	2.2	81	0.098	100	100	10.6	0	395	302	347	360	364	354	603	258	69	46	69	47	67	-0.046	5.18	0.03
19	3.070	3.030	0.16	0.16	1.28	74	2.72	1.08	74	2.2	81	0.098	100	100	10.5	-0.1	393	301	344	357	361	351	597	256	69	46	69	47	67	-0.045	5.1	0.04
20	3.230	3.189	0.16	0.16	1.29	74	2.72	1.09	74	2.2	80	0.099	100	100	10.5	0	391	300	341	354	357	349	593	255	69	46	69	47	67	-0.045	5.18	0.04
21	3.391	3.348	0.16	0.16	1.29	74	2.71	1.09	74	2.2	81	0.098	101	100	10.5	0	389	299	338	350	354	346	588	253	69	46	69	47	67	-0.045	5.19	0.04
22	3.551	3.507	0.16	0.16	1.28	74	2.72	1.09	74	2.2	80	0.097	101	101	10.5	0	387	298	335	347	350	343	582	252	69	46	69	47	67	-0.045	5.22	0.04
23	3.711	3.666	0.16	0.16	1.28	74	2.71	1.09	74	2.2	80	0.099	100	100	10.4	-0.1	385	297	332	344	347	341	582	250	69	46	69	47	67	-0.045	5.26	0.04
24	3.871	3.825	0.16	0.16	1.28	74	2.72	1.08	75	2.2	80	0.101	99	99	10.4	0	384	296	329	341	344	339	589	250	69	46	69	47	66	-0.045	5.29	0.05
25	4.032	3.984	0.16	0.16	1.29	74	2.7	1.09	75	2.2	80	0.101	99	99	10.4	0	382	295	326	338	341	336	591	250	69	47	69	47	66	-0.044	5.3	0.06
26	4.192	4.143	0.16	0.16	1.29	75	2.71	1.08	75	2.2	80	0.100	99	99	10.3	-0.1	381	293	323	335	338	334	585	250	69	47	69	48	65	-0.045	5.19	0.06
27	4.353	4.301	0.16	0.16	1.28	75	2.71	1.09	75	2.2	80	0.100	100	99	10.3	0	379	292	320	333	335	332	578	249	69	47	69	48	65	-0.045	5.18	0.07
28	4.513	4.460	0.16	0.16	1.29	75	2.72	1.09	75	2.2	80	0.101	98	99	10.3	0	377	290	318	330	332	329	571	247	69	47	69	48	65	-0.045	5.14	0.07
29	4.674	4.620	0.16	0.16	1.29	75	2.71	1.09	75	2.2	80	0.100	100	100	10.3	0	375	289	315	327	329	327	568	246	69	47	68	48	66	-0.044	5.05	0.08
30	4.835	4.779	0.16	0.16	1.29	75	2.7	1.09	75	2.2	80	0.099	100	100	10.2	-0.1	373	288	312	325	326	325	564	244	69	47	68	48	66	-0.044	4.91	0.09
31	4.996	4.938	0.16	0.16	1.29	75	2.71	1.09	75	2.2	79	0.100	100	99	10.2	0	366	287	309	323	324	322	559	243	69	47	68	48	66	-0.044	4.75	0.09
32	5.156	5.097	0.16	0.16	1.28	75	2.72	1.08	75	2.2	78	0.097	100	100	10.2	0	360	285	306	321	322	319	554	241	69	48	68	48	66	-0.044	4.74	0.1
33	5.316	5.256	0.16	0.16	1.28	75	2.72	1.09	75	2.2	78	0.100	99	99	10.2	0	355	284	303	319	320	316	550	238	69	48	68	48	66	-0.043	4.7	0.11
34	5.477	5.416	0.16	0.16	1.29	75	2.7	1.09	76	2.2	78	0.098	100	100	10.1	-0.1	350	283	300	317	318	314	547	236	69	48	68	48	66	-0.042	4.79	0.13
35	5.638	5.575	0.16	0.16	1.29	75	2.71	1.08	76	2.2	78	0.098	100	100	10.1	0	345	282	297	315	316	311	546	233	69	48	68	48	66	-0.042	4.82	0.15

Wood Heater Test Data

u

Run: 2

Manufacturer: Kuma
Model: K-181
Tracking No.: 2461
Project No.: 0123WM013E
Test Date: 13-Dec-22
Beginning Clock Time: 12:35

Total Sampling Time: 279 min
Recording Interval: 1 min
Background Sample Volume: 57.64 cubic feet

Meter Box Y Factor: 1.004 (1) 1.002 (2) 1.016 (Amb)

Barometric Pressure:	Begin	Middle	End	Average	
	30.27	30.27	30.27	30.27	0

OMNI Equipment Numbers:

PM Control Modules: 335, 00336
Dilution Tunnel MW(dry): 29.00 lb/lb-mole
Dilution Tunnel MW(wet): 28.78 lb/lb-mole
Dilution Tunnel H2O: 2.00 percent
Dilution Tunnel Static: -0.290 "H2O
Tunnel Area: 0.19625 ft2
Pitot Tube Cp: 0.99

Avg. Tunnel Velocity: 17.89 ft/sec.
Initial Tunnel Flow: 202.3 scfm
Average Tunnel Flow: 204.1 scfm
Post-Test Leak Check (1): 0.000 cfm @ 14 in. Hg
Post-Test Leak Check (2): 0.000 cfm @ 17 in. Hg
Average Test Piece Fuel Moisture: 20.75 Dry Basis %

Technician Signature:_____

Export to PDF

Velocity Traverse Data

	Pt.1	Pt.2	Pt.3	Pt.4	Pt.5	Pt.6	Pt.7	Pt.8	Center	
Initial dP	0.062	0.082	0.084	0.058	0.060	0.076	0.084	0.062	0.096	"H2O
Temp:	79	79	79	79	79	78	77	77	78	°F

V_{strav} 17.68 ft/sec V_{scent} 20.61 ft/sec F_p 0.858

	Particulate Sampling Data														Fuel Weight (lb)		Temperature Data (°F)												Stack Gas Data		
Elapsed Time (min)	Gas Meter 1 (ft^3)	Gas Meter 2 (ft^3)	Sample Rate 1 (cfm)	Sample Rate 2 (cfm)	Orifice dH 1 ("H_2O)	Meter 1 Temp (°F)	Meter 1 Vacuum ("Hg)	Orifice dH 2 ("H_2O)	Meter 2 Temp (°F)	Meter 2 Vacuum ("Hg)	Dilution Tunnel (°F)	Dilution Tunnel Center dP	Pro. Rate 1	Pro. Rate 2	Scale Reading	Weight Change	Firebox Top	Firebox Bottom	Firebox Back	Firebox Left	Firebox Right	Avg. Stove Surface	Catalyst Exit	Stack	Filter 1	Dryer Exit 1	Filter 2	Dryer Exit 2	Ambient	Draft ("H_2O)	CO_2 (%)	CO (%)
36	5.799	5.734	0.16	0.16	1.29	75	2.71	1.09	76	2.2	77	0.098	100	100	10.1	0	341	281	294	313	314	309	541	231	69	48	68	48	67	-0.041	4.7	0.15
37	5.960	5.894	0.16	0.16	1.28	76	2.71	1.09	76	2.2	77	0.099	100	100	10.1	0	336	280	291	311	312	306	536	228	69	48	68	48	66	-0.041	4.77	0.16
38	6.120	6.052	0.16	0.16	1.28	76	2.7	1.09	76	2.2	77	0.098	100	99	10.0	-0.1	332	278	288	310	310	304	532	226	69	48	68	49	66	-0.041	4.81	0.17
39	6.281	6.212	0.16	0.16	1.28	76	2.72	1.09	76	2.2	77	0.097	101	101	10.0	0	328	277	285	308	308	301	532	224	69	48	68	49	66	-0.041	4.94	0.18
40	6.441	6.371	0.16	0.16	1.28	76	2.72	1.08	76	2.2	77	0.100	99	99	10.0	0	325	276	282	306	306	299	536	223	68	49	68	49	66	-0.041	4.9	0.19
41	6.603	6.530	0.16	0.16	1.28	76	2.72	1.09	76	2.2	77	0.100	100	99	10.0	0	322	274	280	304	304	297	539	223	69	49	68	49	66	-0.041	5.22	0.19
42	6.764	6.690	0.16	0.16	1.28	76	2.71	1.09	76	2.2	77	0.099	100	100	9.9	-0.1	323	273	277	302	302	295	623	229	68	49	68	49	66	-0.044	12.21	0.14
43	6.925	6.849	0.16	0.16	1.28	76	2.72	1.08	76	2.2	77	0.097	101	100	9.8	-0.1	331	272	274	301	300	296	709	241	68	49	68	49	66	-0.045	11.02	0.04
44	7.085	7.008	0.16	0.16	1.28	76	2.71	1.09	76	2.2	78	0.098	100	100	9.8	0	341	271	272	299	299	296	735	250	68	49	68	49	66	-0.046	10.24	0.03
45	7.246	7.168	0.16	0.16	1.29	76	2.72	1.09	77	2.2	78	0.099	100	100	9.7	-0.1	350	270	270	297	297	297	746	256	68	49	68	49	67	-0.047	10.23	0.03
46	7.407	7.327	0.16	0.16	1.28	76	2.72	1.09	77	2.2	78	0.098	100	100	9.7	0	360	268	267	296	295	297	747	260	68	49	68	49	66	-0.047	9.91	0.03
47	7.568	7.486	0.16	0.16	1.29	76	2.72	1.09	77	2.2	78	0.098	100	100	9.6	-0.1	367	267	265	295	294	298	740	262	68	49	68	49	66	-0.047	8.95	0.03
48	7.729	7.646	0.16	0.16	1.28	76	2.72	1.09	77	2.2	78	0.098	100	100	9.6	0	372	265	263	293	293	297	729	262	68	49	68	49	66	-0.047	8.02	0.03
49	7.890	7.806	0.16	0.16	1.28	77	2.72	1.09	77	2.2	78	0.100	99	99	9.6	0	374	264	261	292	292	297	706	262	68	49	68	50	66	-0.047	7.07	0.04
50	8.050	7.965	0.16	0.16	1.28	77	2.71	1.09	77	2.2	78	0.096	100	101	9.5	-0.1	375	262	260	291	291	296	689	260	68	49	68	50	66	-0.046	7.24	0.04
51	8.211	8.125	0.16	0.16	1.29	77	2.71	1.09	77	2.2	78	0.099	100	100	9.5	0	374	261	258	290	289	294	684	260	68	49	68	50	66	-0.046	7.51	0.04
52	8.373	8.284	0.16	0.16	1.29	77	2.71	1.08	77	2.2	78	0.098	101	100	9.4	-0.1	374	259	256	289	288	293	684	260	68	50	68	50	67	-0.046	7.65	0.04
53	8.534	8.443	0.16	0.16	1.28	77	2.72	1.09	77	2.2	78	0.098	100	100	9.4	0	373	258	254	288	287	292	685	260	68	50	68	50	67	-0.046	7.86	0.04
54	8.695	8.603	0.16	0.16	1.28	77	2.71	1.09	77	2.2	77	0.098	100	100	9.4	0	373	257	253	287	286	291	693	261	68	50	68	50	67	-0.047	8.02	0.04
55	8.856	8.762	0.16	0.16	1.28	77	2.72	1.09	77	2.2	77	0.097	100	100	9.3	-0.1	374	256	251	286	285	290	707	263	68	50	68	50	66	-0.048	9	0.04
56	9.016	8.922	0.16	0.16	1.29	77	2.71	1.09	77	2.2	78	0.097	100	101	9.3	0	376	254	250	285	284	290	727	266	68	50	68	50	67	-0.048	9.01	0.05
57	9.177	9.082	0.16	0.16	1.29	77	2.73	1.09	77	2.2	78	0.098	100	100	9.2	-0.1	379	253	248	284	283	289	736	267	68	50	68	50	67	-0.048	8.89	0.05
58	9.339	9.241	0.16	0.16	1.29	77	2.73	1.09	77	2.2	77	0.099	100	99	9.2	0	381	252	247	284	282	289	734	269	68	50	68	50	67	-0.048	8.68	0.04
59	9.500	9.400	0.16	0.16	1.28	77	2.72	1.09	77	2.2	78	0.099	100	99	9.1	-0.1	383	251	245	283	281	289	734	270	68	50	68	50	67	-0.048	8.45	0.05
60	9.661	9.560	0.16	0.16	1.28	77	2.73	1.09	77	2.2	78	0.099	100	100	9.1	0	385	249	244	283	280	288	741	271	68	50	68	50	67	-0.048	9.5	0.05
61	9.820	9.719	0.16	0.16	1.29	77	3.09	1.09	77	2.2	78	0.100	98	99	9.0	-0.1	388	248	243	282	280	288	763	274	66	50	68	51	67	-0.049	9.87	0.06
62	9.981	9.879	0.16	0.16	1.29	77	3.1	1.09	77	2.2	78	0.097	101	101	9.0	0	392	247	242	282	279	288	778	278	66	50	68	51	67	-0.049	10.08	0.06
63	10.142	10.039	0.16	0.16	1.28	77	3.1	1.08	78	2.2	78	0.097	101	101	8.9	-0.1	396	246	241	281	278	288	779	282	66	50	68	51	67	-0.050	11.3	0.06
64	10.303	10.198	0.16	0.16	1.28	77	3.11	1.09	78	2.2	78	0.099	100	99	8.9	0	400	245	240	281	277	289	783	284	67	50	68	51	67	-0.051	11.15	0.05
65	10.464	10.358	0.16	0.16	1.27	77	3.11	1.09	78	2.2	78	0.098	100	100	8.8	-0.1	404	244	239	281	276	289	785	285	67	50	68	51	67	-0.051	10.39	0.06
66	10.624	10.518	0.16	0.16	1.28	78	3.1	1.09	78	2.2	78	0.099	99	100	8.8	0	409	243	238	280	276	289	797	287	67	51	68	51	67	-0.050	9.6	0.07
67	10.785	10.677	0.16	0.16	1.28	78	3.11	1.09	78	2.2	79	0.098	100	99	8.7	-0.1	413	242	237	280	275	289	803	289	67	51	68	51	67	-0.051	10.34	0.07
68	10.946	10.837	0.16	0.16	1.28	78	3.1	1.09	78	2.2	78	0.098	100	100	8.7	0	418	241	237	280	275	290	810	290	67	51	68	51	67	-0.051	9.28	0.08
69	11.108	10.996	0.16	0.16	1.28	78	3.11	1.08	78	2.2	78	0.098	100	99	8.6	-0.1	422	239	236	280	274	290	811	292	67	51	68	51	67	-0.052	9.93	0.07
70	11.268	11.155	0.16	0.16	1.28	78	3.11	1.09	78	2.2	78	0.101	98	98	8.6	0	424	238	235	280	274	290	813	292	67	51	68	51	67	-0.052	9.69	0.08
71	11.429	11.315	0.16	0.16	1.27	78	3.11	1.09	78	2.2	79	0.096	101	101	8.5	-0.1	427	237	235	280	273	290	817	293	67	51	68	51	67	-0.052	8.69	0.08

Wood Heater Test Data

u

Run: 2

Manufacturer: Kuma
Model: K-181
Tracking No.: 2461
Project No.: 0123WM013E
Test Date: 13-Dec-22
Beginning Clock Time: 12:35

Total Sampling Time: 279 min
Recording Interval: 1 min
Background Sample Volume: 57.64 cubic feet

Meter Box Y Factor: 1.004 (1) 1.002 (2) 1.016 (Amb)

Barometric Pressure:	Begin	Middle	End	Average	
	30.27	30.27	30.27	30.27	0

OMNI Equipment Numbers:

PM Control Modules: 335, 00336
Dilution Tunnel MW(dry): 29.00 lb/lb-mole
Dilution Tunnel MW(wet): 28.78 lb/lb-mole
Dilution Tunnel H2O: 2.00 percent
Dilution Tunnel Static: -0.290 "H2O
Tunnel Area: 0.19625 ft2
Pitot Tube Cp: 0.99

Avg. Tunnel Velocity: 17.89 ft/sec.
Initial Tunnel Flow: 202.3 scfm
Average Tunnel Flow: 204.1 scfm
Post-Test Leak Check (1): 0.000 cfm @ 14 in. Hg
Post-Test Leak Check (2): 0.000 cfm @ 17 in. Hg
Average Test Piece Fuel Moisture: 20.75 Dry Basis %

Technician Signature:_____

Export to PDF

Velocity Traverse Data

	Pt.1	Pt.2	Pt.3	Pt.4	Pt.5	Pt.6	Pt.7	Pt.8	Center	
Initial dP	0.062	0.082	0.084	0.058	0.060	0.076	0.084	0.062	0.096	"H2O
Temp:	79	79	79	79	79	78	77	77	78	°F

V_{strav} 17.68 ft/sec V_{scent} 20.61 ft/sec F_p 0.858

	Particulate Sampling Data														Fuel Weight (lb)		Temperature Data (°F)												Stack Gas Data		
Elapsed Time (min)	Gas Meter 1 (ft^3)	Gas Meter 2 (ft^3)	Sample Rate 1 (cfm)	Sample Rate 2 (cfm)	Orifice dH 1 ("H_2O)	Meter 1 Temp (°F)	Meter 1 Vacuum ("Hg)	Orifice dH 2 ("H_2O)	Meter 2 Temp (°F)	Meter 2 Vacuum ("Hg)	Dilution Tunnel (°F)	Dilution Tunnel Center dP	Pro. Rate 1	Pro. Rate 2	Scale Reading	Weight Change	Firebox Top	Firebox Bottom	Firebox Back	Firebox Left	Firebox Right	Avg. Stove Surface	Catalyst Exit	Stack	Filter 1	Dryer Exit 1	Filter 2	Dryer Exit 2	Ambient	Draft ("H_2O)	CO_2 (%)	CO (%)
72	11.590	11.475	0.16	0.16	1.28	78	3.1	1.09	78	2.2	79	0.098	100	100	8.5	0	428	236	235	280	272	290	808	293	67	51	68	51	67	-0.052	8.75	0.07
73	11.750	11.634	0.16	0.16	1.28	78	3.11	1.09	78	2.2	79	0.097	100	100	8.4	-0.1	428	235	234	281	272	290	804	294	67	51	68	51	67	-0.052	8.76	0.07
74	11.911	11.794	0.16	0.16	1.28	78	3.11	1.09	78	2.2	78	0.096	101	101	8.4	0	429	234	234	281	271	290	804	293	67	51	68	52	67	-0.051	8.76	0.08
75	12.072	11.953	0.16	0.16	1.28	78	3.11	1.09	78	2.2	79	0.097	100	100	8.3	-0.1	429	233	233	281	271	289	812	294	68	51	68	52	67	-0.052	8.81	0.08
76	12.233	12.113	0.16	0.16	1.27	78	3.11	1.09	78	2.2	79	0.100	99	99	8.3	0	430	232	233	281	270	289	821	295	68	51	68	52	67	-0.052	8.89	0.09
77	12.394	12.273	0.16	0.16	1.28	78	3.12	1.08	78	2.2	79	0.100	99	99	8.2	-0.1	431	231	233	282	270	289	832	298	68	51	68	52	67	-0.052	9.22	0.1
78	12.554	12.432	0.16	0.16	1.28	78	3.11	1.09	78	2.2	79	0.098	99	99	8.2	0	433	230	232	282	269	289	847	300	68	51	68	52	67	-0.053	9.54	0.11
79	12.715	12.592	0.16	0.16	1.29	78	3.1	1.09	78	2.2	79	0.098	100	100	8.2	0	437	229	232	282	269	290	864	303	68	51	68	52	67	-0.052	9.68	0.11
80	12.877	12.752	0.16	0.16	1.28	78	3.11	1.08	78	2.2	79	0.097	101	101	8.1	-0.1	440	229	232	283	268	290	871	308	68	51	68	52	68	-0.055	11.69	0.1
81	13.037	12.911	0.16	0.16	1.27	78	3.12	1.09	78	2.2	79	0.098	99	99	8.0	-0.1	443	228	232	283	268	291	885	316	68	51	68	52	68	-0.056	15.43	0.12
82	13.198	13.070	0.16	0.16	1.27	78	3.11	1.09	78	2.2	80	0.099	100	99	7.9	-0.1	447	227	232	283	268	291	880	322	68	51	68	52	68	-0.056	16.03	0.12
83	13.358	13.230	0.16	0.16	1.28	78	3.12	1.09	78	2.2	80	0.097	100	101	7.8	-0.1	453	226	232	284	268	293	890	326	68	52	68	52	68	-0.058	15.68	0.1
84	13.519	13.389	0.16	0.16	1.28	78	3.13	1.09	78	2.2	81	0.098	100	100	7.7	-0.1	460	226	233	285	268	294	892	331	68	52	68	52	68	-0.058	17.47	0.68
85	13.680	13.549	0.16	0.16	1.27	78	3.13	1.09	79	2.2	81	0.097	101	101	7.6	-0.1	471	225	234	286	269	297	924	339	68	52	68	52	67	-0.060	17.55	1.78
86	13.841	13.709	0.16	0.16	1.27	78	3.12	1.09	79	2.2	82	0.098	100	100	7.5	-0.1	484	224	235	287	271	300	941	345	68	52	68	52	67	-0.060	17.81	2.27
87	14.002	13.868	0.16	0.16	1.27	78	3.12	1.09	79	2.2	82	0.098	100	100	7.4	-0.1	496	223	237	289	272	303	947	350	68	52	68	53	67	-0.061	18	2.26
88	14.162	14.027	0.16	0.16	1.27	78	3.12	1.09	79	2.2	82	0.098	100	100	7.3	-0.1	508	223	238	290	274	307	944	353	69	52	69	53	67	-0.061	18.54	1.76
89	14.322	14.187	0.16	0.16	1.28	78	3.12	1.09	79	2.2	82	0.097	100	101	7.1	-0.2	518	222	241	291	276	310	941	356	69	52	69	53	67	-0.062	18.62	1.33
90	14.483	14.346	0.16	0.16	1.27	78	3.13	1.09	79	2.2	82	0.096	101	101	7.0	-0.1	527	221	243	293	279	313	942	357	69	52	69	53	67	-0.061	18.58	0.94
91	14.645	14.506	0.16	0.16	1.27	78	3.13	1.09	79	2.2	82	0.098	101	100	6.9	-0.1	536	220	246	294	281	315	951	359	69	52	69	53	67	-0.061	18.53	0.57
92	14.806	14.666	0.16	0.16	1.27	78	3.13	1.08	79	2.2	82	0.098	100	100	6.8	-0.1	545	220	249	296	284	319	953	360	69	52	69	53	67	-0.061	18.24	0.38
93	14.966	14.825	0.16	0.16	1.27	78	3.13	1.09	79	2.2	82	0.098	100	100	6.7	-0.1	552	219	252	298	287	322	939	359	69	52	69	53	67	-0.061	17.65	0.13
94	15.126	14.985	0.16	0.16	1.27	79	3.12	1.09	79	2.2	83	0.096	101	101	6.6	-0.1	557	218	256	300	289	324	918	357	69	52	69	53	67	-0.061	16.77	0.07
95	15.287	15.144	0.16	0.16	1.28	79	3.13	1.08	79	2.2	83	0.098	100	100	6.6	0	563	218	260	302	292	327	949	355	69	52	69	53	67	-0.060	15.19	0.09
96	15.448	15.303	0.16	0.16	1.28	79	3.13	1.09	79	2.2	83	0.097	101	100	6.5	-0.1	574	217	264	304	295	331	1000	358	69	52	69	53	67	-0.061	14.62	0.12
97	15.609	15.464	0.16	0.16	1.27	79	3.12	1.09	79	2.2	82	0.097	101	101	6.4	-0.1	583	217	268	306	297	334	1007	360	69	52	69	53	67	-0.061	14.19	0.12
98	15.769	15.623	0.16	0.16	1.27	79	3.12	1.08	79	2.2	82	0.097	100	100	6.3	-0.1	588	216	272	308	299	337	997	361	69	52	69	53	67	-0.061	13.9	0.12
99	15.929	15.782	0.16	0.16	1.28	79	3.12	1.08	79	2.2	83	0.098	100	100	6.3	0	590	215	277	310	301	339	987	362	69	52	69	53	67	-0.061	13.95	0.12
100	16.090	15.943	0.16	0.16	1.27	79	3.11	1.09	79	2.2	83	0.098	100	101	6.2	-0.1	591	215	282	311	303	340	981	363	69	53	69	54	67	-0.061	14.1	0.12
101	16.251	16.102	0.16	0.16	1.28	79	3.11	1.09	79	2.2	83	0.100	99	99	6.1	-0.1	590	214	287	313	305	342	977	364	69	53	69	54	67	-0.061	14.53	0.13
102	16.411	16.261	0.16	0.16	1.28	79	3.11	1.09	79	2.2	83	0.099	99	99	6.0	-0.1	589	214	292	314	307	343	974	365	69	53	69	54	67	-0.062	14.76	0.14
103	16.572	16.422	0.16	0.16	1.27	79	3.12	1.09	79	2.2	84	0.097	101	102	5.9	-0.1	587	213	297	316	308	344	965	366	69	53	69	54	67	-0.062	15.22	0.14
104	16.732	16.580	0.16	0.16	1.27	79	3.12	1.09	79	2.2	84	0.096	101	100	5.8	-0.1	584	213	303	317	310	345	955	367	69	53	69	54	67	-0.062	15.65	0.13
105	16.892	16.740	0.16	0.16	1.27	79	3.11	1.09	79	2.2	84	0.098	100	100	5.7	-0.1	582	212	308	319	311	346	949	366	69	53	69	54	67	-0.062	16.41	0.11
106	17.053	16.901	0.16	0.16	1.27	79	3.12	1.08	79	2.2	84	0.098	100	101	5.7	0	581	212	313	321	313	348	953	367	69	53	69	54	67	-0.062	17.08	0.11
107	17.214	17.059	0.16	0.16	1.27	79	3.12	1.09	79	2.2	84	0.097	101	100	5.6	-0.1	580	212	318	322	315	349	947	367	69	53	69	54	67	-0.062	17.33	0.08

Wood Heater Test Data

Run: 2

Manufacturer: Kuma
Model: K-181
Tracking No.: 2461
Project No.: 0123WM013E
Test Date: 13-Dec-22
Beginning Clock Time: 12:35

Total Sampling Time: 279 min
Recording Interval: 1 min
Background Sample Volume: 57.64 cubic feet

Meter Box Y Factor: 1.004 (1) 1.002 (2) 1.016 (Amb)

Barometric Pressure:	Begin	Middle	End	Average	
	30.27	30.27	30.27	30.27	0

OMNI Equipment Numbers:

PM Control Modules: 335, 00336
Dilution Tunnel MW(dry): 29.00 lb/lb-mole
Dilution Tunnel MW(wet): 28.78 lb/lb-mole
Dilution Tunnel H2O: 2.00 percent
Dilution Tunnel Static: -0.290 "H2O
Tunnel Area: 0.19625 ft2
Pitot Tube Cp: 0.99

Avg. Tunnel Velocity: 17.89 ft/sec.
Initial Tunnel Flow: 202.3 scfm
Average Tunnel Flow: 204.1 scfm
Post-Test Leak Check (1): 0.000 cfm @ 14 in. Hg
Post-Test Leak Check (2): 0.000 cfm @ 17 in. Hg
Average Test Piece Fuel Moisture: 20.75 Dry Basis %

Technician Signature:_____

Export to PDF

Velocity Traverse Data

	Pt.1	Pt.2	Pt.3	Pt.4	Pt.5	Pt.6	Pt.7	Pt.8	Center	
Initial dP	0.062	0.082	0.084	0.058	0.060	0.076	0.084	0.062	0.096	"H2O
Temp:	79	79	79	79	79	78	77	77	78	°F

V_{strav} 17.68 ft/sec V_{scent} 20.61 ft/sec F_p 0.858

	Particulate Sampling Data														Fuel Weight (lb)		Temperature Data (°F)												Stack Gas Data		
Elapsed Time (min)	Gas Meter 1 (ft^3)	Gas Meter 2 (ft^3)	Sample Rate 1 (cfm)	Sample Rate 2 (cfm)	Orifice dH 1 ("H_2O)	Meter 1 Temp (°F)	Meter 1 Vacuum ("Hg)	Orifice dH 2 ("H_2O)	Meter 2 Temp (°F)	Meter 2 Vacuum ("Hg)	Dilution Tunnel (°F)	Dilution Tunnel Center dP	Pro. Rate 1	Pro. Rate 2	Scale Reading	Weight Change	Firebox Top	Firebox Bottom	Firebox Back	Firebox Left	Firebox Right	Avg. Stove Surface	Catalyst Exit	Stack	Filter 1	Dryer Exit 1	Filter 2	Dryer Exit 2	Ambient	Draft ("H_2O)	CO_2 (%)	CO (%)
108	17.374	17.219	0.16	0.16	1.27	79	3.11	1.09	79	2.2	84	0.098	100	100	5.5	-0.1	579	211	322	324	316	350	944	366	69	53	69	54	67	-0.061	17.42	0.08
109	17.535	17.379	0.16	0.16	1.27	79	3.12	1.09	79	2.2	84	0.097	101	101	5.4	-0.1	579	211	327	326	318	352	943	365	69	53	69	54	67	-0.061	17.44	0.07
110	17.695	17.539	0.16	0.16	1.27	79	3.12	1.09	79	2.2	84	0.097	100	101	5.3	-0.1	579	211	331	327	320	354	945	364	69	53	69	54	67	-0.061	17.79	0.08
111	17.856	17.698	0.16	0.16	1.27	79	3.12	1.09	79	2.2	84	0.098	100	100	5.2	-0.1	580	211	335	329	322	355	946	364	69	53	69	54	67	-0.061	17.87	0.11
112	18.017	17.859	0.16	0.16	1.27	79	3.11	1.09	79	2.2	84	0.097	101	102	5.1	-0.1	582	210	338	331	324	357	953	362	69	53	69	54	67	-0.060	18.09	0.14
113	18.177	18.018	0.16	0.16	1.27	79	3.12	1.09	79	2.2	84	0.097	100	100	5.0	-0.1	584	210	342	333	326	359	937	361	69	53	69	54	67	-0.060	16.97	0.05
114	18.337	18.177	0.16	0.16	1.27	79	3.11	1.09	79	2.2	84	0.098	100	100	5.0	0	584	210	345	336	327	360	922	358	69	53	69	54	67	-0.060	16.35	0.08
115	18.498	18.337	0.16	0.16	1.27	79	3.13	1.09	79	2.2	84	0.098	100	100	4.9	-0.1	586	210	348	338	329	362	933	359	69	53	69	54	67	-0.060	15.86	0.1
116	18.658	18.497	0.16	0.16	1.27	79	3.12	1.09	79	2.2	84	0.098	100	100	4.8	-0.1	589	210	352	340	331	364	953	359	69	53	69	54	67	-0.060	15.77	0.12
117	18.820	18.656	0.16	0.16	1.27	79	3.11	1.09	79	2.2	84	0.098	101	100	4.7	-0.1	593	210	355	342	333	367	961	361	69	53	69	54	67	-0.060	15.68	0.12
118	18.980	18.817	0.16	0.16	1.27	79	3.11	1.09	79	2.2	84	0.097	100	102	4.7	0	596	210	359	344	335	369	968	361	69	53	69	54	67	-0.060	15.6	0.13
119	19.140	18.976	0.16	0.16	1.27	79	3.12	1.09	79	2.2	84	0.098	100	100	4.6	-0.1	598	210	363	346	336	371	969	362	69	53	69	55	67	-0.061	15.56	0.13
120	19.301	19.135	0.16	0.16	1.27	79	3.12	1.09	79	2.2	84	0.097	101	100	4.5	-0.1	599	210	367	348	338	372	963	362	69	53	69	55	67	-0.061	15.46	0.13
121	19.461	19.296	0.16	0.16	1.27	79	3.11	1.09	79	2.2	84	0.097	100	102	4.4	-0.1	598	210	371	349	339	373	953	362	70	54	69	55	67	-0.060	15.3	0.12
122	19.623	19.455	0.16	0.16	1.27	79	3.12	1.09	79	2.2	84	0.097	101	100	4.4	0	595	210	375	351	341	374	920	359	70	54	69	55	67	-0.059	15.3	0.07
123	19.783	19.614	0.16	0.16	1.27	79	3.12	1.09	79	2.2	84	0.097	100	100	4.3	-0.1	591	211	379	353	342	375	909	356	70	54	69	55	67	-0.058	14.94	0.07
124	19.944	19.775	0.16	0.16	1.27	79	3.11	1.09	79	2.2	84	0.097	101	102	4.2	-0.1	587	211	382	355	343	376	910	353	70	54	69	55	67	-0.059	14.63	0.07
125	20.104	19.934	0.16	0.16	1.27	79	3.12	1.09	79	2.2	84	0.098	100	100	4.2	0	585	211	385	357	345	377	915	351	70	54	69	55	67	-0.059	14.52	0.07
126	20.264	20.094	0.16	0.16	1.27	79	3.12	1.09	79	2.2	84	0.098	100	100	4.1	-0.1	582	212	388	358	347	377	910	348	70	54	69	55	67	-0.058	14.54	0.06
127	20.426	20.254	0.16	0.16	1.27	79	3.12	1.08	79	2.2	83	0.097	101	101	4.0	-0.1	580	212	391	360	348	378	911	346	69	54	69	55	67	-0.057	14.32	0.07
128	20.587	20.413	0.16	0.16	1.27	79	3.12	1.09	79	2.2	84	0.098	100	100	4.0	0	578	213	394	361	350	379	912	346	70	54	69	55	67	-0.059	13.91	0.09
129	20.747	20.573	0.16	0.16	1.26	79	3.12	1.09	79	2.2	83	0.098	100	100	3.9	-0.1	576	213	396	362	352	380	905	344	70	54	69	55	67	-0.057	14.16	0.07
130	20.907	20.733	0.16	0.16	1.27	79	3.12	1.09	79	2.2	83	0.098	100	100	3.9	0	573	214	398	363	353	380	898	343	70	54	69	55	67	-0.058	14.21	0.07
131	21.068	20.892	0.16	0.16	1.27	79	3.12	1.09	79	2.2	83	0.097	101	100	3.8	-0.1	570	214	400	364	355	381	892	342	70	54	69	55	67	-0.057	14.16	0.07
132	21.229	21.052	0.16	0.16	1.27	79	3.11	1.09	79	2.2	83	0.099	100	100	3.8	0	567	215	402	365	357	381	889	340	70	54	69	55	67	-0.057	14.13	0.07
133	21.390	21.212	0.16	0.16	1.27	79	3.13	1.09	80	2.2	83	0.099	100	100	3.7	-0.1	564	216	403	366	358	381	882	338	70	54	69	55	67	-0.057	14.22	0.07
134	21.550	21.371	0.16	0.16	1.27	79	3.11	1.09	80	2.2	83	0.098	100	99	3.6	-0.1	561	216	405	367	360	382	873	336	70	54	69	55	67	-0.056	14.11	0.06
135	21.711	21.532	0.16	0.16	1.27	79	3.11	1.09	80	2.2	83	0.097	101	101	3.6	0	558	217	406	368	361	382	865	335	70	54	69	55	67	-0.056	14	0.06
136	21.871	21.692	0.16	0.16	1.27	79	3.11	1.08	80	2.2	83	0.099	99	100	3.5	-0.1	556	218	408	368	363	383	861	332	70	54	69	55	67	-0.055	13.9	0.06
137	22.032	21.851	0.16	0.16	1.28	79	3.12	1.09	79	2.2	83	0.097	101	100	3.5	0	553	218	409	369	365	383	861	331	69	54	69	55	67	-0.055	13.75	0.07
138	22.194	22.011	0.16	0.16	1.27	79	3.11	1.09	80	2.2	83	0.098	101	100	3.5	0	551	218	410	370	366	383	855	329	70	54	69	55	67	-0.055	13.79	0.06
139	22.354	22.171	0.16	0.16	1.26	79	3.11	1.09	80	2.2	83	0.098	100	100	3.4	-0.1	550	219	412	370	367	384	873	328	70	54	69	55	67	-0.057	13.46	0.09
140	22.514	22.331	0.16	0.16	1.27	79	3.11	1.09	80	2.2	82	0.097	100	101	3.3	-0.1	551	220	413	371	369	385	897	331	69	54	69	55	67	-0.055	13.34	0.11
141	22.675	22.491	0.16	0.16	1.28	79	3.11	1.09	80	2.2	82	0.097	101	101	3.3	0	552	220	414	372	370	386	900	331	69	54	69	55	67	-0.055	13.32	0.11
142	22.835	22.651	0.16	0.16	1.27	79	3.11	1.09	80	2.2	83	0.098	100	100	3.2	-0.1	553	221	416	372	371	387	908	331	69	54	69	55	67	-0.057	13.26	0.11
143	22.997	22.810	0.16	0.16	1.27	79	3.12	1.09	80	2.2	83	0.097	101	100	3.2	0	554	222	418	373	372	388	903	331	69	54	69	55	67	-0.055	13.43	0.11

Wood Heater Test Data

u

Run: 2

Manufacturer: Kuma
Model: K-181
Tracking No.: 2461
Project No.: 0123WM013E
Test Date: 13-Dec-22
Beginning Clock Time: 12:35

Total Sampling Time: 279 min
Recording Interval: 1 min
Background Sample Volume: 57.64 cubic feet

Meter Box Y Factor: 1.004 (1) 1.002 (2) 1.016 (Amb)

Barometric Pressure:	Begin	Middle	End	Average	
	30.27	30.27	30.27	30.27	0

OMNI Equipment Numbers:

PM Control Modules: 335, 00336
Dilution Tunnel MW(dry): 29.00 lb/lb-mole
Dilution Tunnel MW(wet): 28.78 lb/lb-mole
Dilution Tunnel H2O: 2.00 percent
Dilution Tunnel Static: -0.290 "H2O
Tunnel Area: 0.19625 ft2
Pitot Tube Cp: 0.99

Avg. Tunnel Velocity: 17.89 ft/sec.
Initial Tunnel Flow: 202.3 scfm
Average Tunnel Flow: 204.1 scfm
Post-Test Leak Check (1): 0.000 cfm @ 14 in. Hg
Post-Test Leak Check (2): 0.000 cfm @ 17 in. Hg
Average Test Piece Fuel Moisture: 20.75 Dry Basis %

Technician Signature:_____

Export to PDF

Velocity Traverse Data	Pt.1	Pt.2	Pt.3	Pt.4	Pt.5	Pt.6	Pt.7	Pt.8	Center	
Initial dP	0.062	0.082	0.084	0.058	0.060	0.076	0.084	0.062	0.096	"H2O
Temp:	79	79	79	79	79	78	77	77	78	°F

V_{strav} 17.68 ft/sec V_{scent} 20.61 ft/sec F_p 0.858

	Particulate Sampling Data														Fuel Weight (lb)		Temperature Data (°F)												Stack Gas Data		
Elapsed Time (min)	Gas Meter 1 (ft^3)	Gas Meter 2 (ft^3)	Sample Rate 1 (cfm)	Sample Rate 2 (cfm)	Orifice dH 1 ("H_2O)	Meter 1 Temp (°F)	Meter 1 Vacuum ("Hg)	Orifice dH 2 ("H_2O)	Meter 2 Temp (°F)	Meter 2 Vacuum ("Hg)	Dilution Tunnel (°F)	Dilution Tunnel Center dP	Pro. Rate 1	Pro. Rate 2	Scale Reading	Weight Change	Firebox Top	Firebox Bottom	Firebox Back	Firebox Left	Firebox Right	Avg. Stove Surface	Catalyst Exit	Stack	Filter 1	Dryer Exit 1	Filter 2	Dryer Exit 2	Ambient	Draft ("H_2O)	CO_2 (%)	CO (%)
144	23.158	22.971	0.16	0.16	1.27	79	3.12	1.09	80	2.2	82	0.098	100	101	3.1	-0.1	553	222	419	373	373	388	910	331	69	54	69	55	68	-0.056	13.3	0.11
145	23.318	23.131	0.16	0.16	1.27	79	3.13	1.08	80	2.2	82	0.096	100	101	3.1	0	553	223	421	374	374	389	904	330	69	54	69	55	67	-0.055	13.54	0.1
146	23.478	23.290	0.16	0.16	1.27	79	3.12	1.09	80	2.2	82	0.097	100	100	3.0	-0.1	553	224	423	375	375	390	894	331	69	54	69	55	67	-0.056	13.83	0.09
147	23.639	23.451	0.16	0.16	1.27	79	3.11	1.09	80	2.2	82	0.098	100	101	3.0	0	551	224	425	375	375	390	888	330	69	54	69	55	67	-0.055	14	0.09
148	23.800	23.611	0.16	0.16	1.28	79	3.12	1.09	80	2.2	82	0.097	101	101	2.9	-0.1	550	225	427	376	376	391	889	329	69	54	69	55	67	-0.055	14.09	0.1
149	23.961	23.770	0.16	0.16	1.27	79	3.12	1.09	80	2.2	82	0.098	100	99	2.9	0	550	226	429	376	377	392	903	329	69	54	69	55	67	-0.055	13.93	0.1
150	24.122	23.930	0.16	0.16	1.27	79	3.12	1.09	80	2.2	82	0.097	101	101	2.8	-0.1	551	226	431	377	377	392	913	330	69	54	69	55	67	-0.055	13.99	0.1
151	24.282	24.091	0.16	0.16	1.27	79	3.11	1.09	80	2.2	82	0.098	99	101	2.8	0	552	227	433	377	378	393	915	330	69	54	69	55	67	-0.054	13.91	0.1
152	24.443	24.250	0.16	0.16	1.27	79	3.13	1.09	80	2.2	82	0.097	101	100	2.7	-0.1	552	228	435	378	378	394	908	330	69	54	69	55	67	-0.055	13.9	0.1
153	24.604	24.410	0.16	0.16	1.27	79	3.12	1.09	80	2.2	82	0.098	100	100	2.7	0	551	228	437	379	379	395	898	329	69	54	69	55	67	-0.054	13.65	0.09
154	24.765	24.570	0.16	0.16	1.28	79	3.11	1.08	79	2.2	82	0.097	101	101	2.7	0	549	229	439	379	379	395	885	328	69	54	69	55	67	-0.055	13.73	0.09
155	24.926	24.730	0.16	0.16	1.27	79	3.13	1.09	80	2.2	82	0.097	101	101	2.6	-0.1	547	230	441	380	380	396	874	327	69	54	69	55	67	-0.054	13.65	0.09
156	25.086	24.889	0.16	0.16	1.27	79	3.11	1.09	80	2.2	82	0.097	100	100	2.6	0	545	230	443	381	380	396	867	325	69	54	69	55	67	-0.054	13.64	0.08
157	25.247	25.050	0.16	0.16	1.28	79	3.12	1.09	80	2.2	82	0.099	100	100	2.5	-0.1	543	231	445	381	381	396	862	324	69	54	69	55	67	-0.054	13.58	0.08
158	25.408	25.209	0.16	0.16	1.27	79	3.12	1.09	80	2.2	82	0.096	101	100	2.5	0	541	232	446	382	381	396	857	323	69	54	69	55	67	-0.053	13.54	0.08
159	25.569	25.369	0.16	0.16	1.28	79	3.12	1.09	80	2.2	82	0.097	101	101	2.4	-0.1	538	233	447	383	381	396	850	322	69	54	69	55	67	-0.053	13.64	0.07
160	25.730	25.529	0.16	0.16	1.27	79	3.11	1.09	80	2.2	82	0.097	101	101	2.4	0	537	233	449	383	382	397	855	321	69	54	69	55	67	-0.055	13.52	0.08
161	25.891	25.689	0.16	0.16	1.27	79	3.11	1.09	80	2.2	82	0.094	102	102	2.3	-0.1	535	234	450	384	382	397	851	319	69	54	69	55	68	-0.053	13.48	0.07
162	26.051	25.849	0.16	0.16	1.27	79	3.11	1.09	80	2.2	82	0.097	100	101	2.3	0	533	235	451	385	383	397	841	317	69	54	69	55	68	-0.053	13.29	0.08
163	26.212	26.009	0.16	0.16	1.27	79	3.11	1.09	80	2.2	82	0.097	101	101	2.3	0	531	236	451	386	383	397	834	315	69	54	69	55	67	-0.052	12.85	0.08
164	26.372	26.169	0.16	0.16	1.27	79	3.12	1.09	80	2.2	82	0.098	99	100	2.2	-0.1	529	236	452	387	383	397	830	313	69	54	69	55	67	-0.051	12.43	0.09
165	26.534	26.329	0.16	0.16	1.27	79	3.12	1.09	80	2.2	82	0.098	101	100	2.2	0	527	237	452	387	384	397	822	311	69	54	69	55	67	-0.051	12.35	0.09
166	26.695	26.489	0.16	0.16	1.27	79	3.11	1.09	80	2.2	82	0.096	101	101	2.1	-0.1	524	238	453	389	384	398	816	309	69	54	69	55	68	-0.051	12.22	0.08
167	26.855	26.649	0.16	0.16	1.27	79	3.11	1.09	80	2.2	81	0.098	99	100	2.1	0	521	238	453	390	385	397	808	307	69	54	69	55	67	-0.051	12.1	0.08
168	27.015	26.808	0.16	0.16	1.28	79	3.11	1.09	80	2.2	81	0.098	99	99	2.1	0	518	239	453	390	385	397	802	305	69	54	69	55	67	-0.050	12.13	0.08
169	27.176	26.969	0.16	0.16	1.27	79	3.11	1.08	80	2.2	81	0.096	101	102	2.0	-0.1	514	240	453	391	386	397	799	303	69	54	69	55	67	-0.050	11.99	0.08
170	27.338	27.129	0.16	0.16	1.27	79	3.11	1.09	80	2.2	81	0.098	101	100	2.0	0	512	241	453	392	386	397	805	302	69	54	69	55	67	-0.050	12.24	0.09
171	27.499	27.288	0.16	0.16	1.27	79	3.12	1.09	80	2.2	81	0.100	99	98	2.0	0	510	241	453	393	387	397	809	302	69	54	69	55	67	-0.051	12.3	0.09
172	27.659	27.449	0.16	0.16	1.27	79	3.11	1.09	80	2.2	81	0.098	99	101	1.9	-0.1	507	242	453	393	387	396	807	301	69	54	69	55	67	-0.050	12.43	0.08
173	27.820	27.609	0.16	0.16	1.27	79	3.12	1.09	80	2.2	81	0.099	99	99	1.9	0	504	243	453	394	387	396	803	299	69	54	69	55	67	-0.049	12.42	0.08
174	27.981	27.769	0.16	0.16	1.28	79	3.11	1.09	80	2.2	81	0.098	100	100	1.9	0	502	243	453	394	388	396	806	298	69	54	69	55	67	-0.050	12.44	0.08
175	28.141	27.929	0.16	0.16	1.28	79	3.11	1.09	80	2.2	80	0.098	99	100	1.8	-0.1	500	244	454	395	388	396	805	297	69	54	69	55	67	-0.048	12.27	0.08
176	28.303	28.089	0.16	0.16	1.27	79	3.12	1.09	80	2.2	80	0.098	100	100	1.8	0	499	245	454	395	389	396	814	296	69	54	69	55	68	-0.049	11.96	0.09
177	28.464	28.248	0.16	0.16	1.27	79	3.12	1.09	80	2.2	80	0.098	100	99	1.8	0	498	246	455	396	389	397	821	296	69	54	69	55	68	-0.050	11.61	0.09
178	28.624	28.409	0.16	0.16	1.28	79	3.12	1.09	80	2.2	81	0.098	99	101	1.7	-0.1	496	246	456	396	389	397	808	296	69	54	69	55	67	-0.049	11.15	0.08
179	28.785	28.569	0.16	0.16	1.28	79	3.12	1.09	80	2.2	80	0.100	99	99	1.7	0	493	247	457	397	390	397	787	294	69	54	69	55	67	-0.049	10.88	0.08

Wood Heater Test Data

u

Run: 2

Manufacturer: Kuma
Model: K-181
Tracking No.: 2461
Project No.: 0123WM013E
Test Date: 13-Dec-22
Beginning Clock Time: 12:35

Total Sampling Time: 279 min
Recording Interval: 1 min
Background Sample Volume: 57.64 cubic feet

Meter Box Y Factor: 1.004 (1) 1.002 (2) 1.016 (Amb)

Barometric Pressure:	Begin	Middle	End	Average	
	30.27	30.27	30.27	30.27	0

OMNI Equipment Numbers:

PM Control Modules: 335, 00336
Dilution Tunnel MW(dry): 29.00 lb/lb-mole
Dilution Tunnel MW(wet): 28.78 lb/lb-mole
Dilution Tunnel H2O: 2.00 percent
Dilution Tunnel Static: -0.290 "H2O
Tunnel Area: 0.19625 ft2
Pitot Tube Cp: 0.99

Avg. Tunnel Velocity: 17.89 ft/sec.
Initial Tunnel Flow: 202.3 scfm
Average Tunnel Flow: 204.1 scfm
Post-Test Leak Check (1): 0.000 cfm @ 14 in. Hg
Post-Test Leak Check (2): 0.000 cfm @ 17 in. Hg
Average Test Piece Fuel Moisture: 20.75 Dry Basis %

Technician Signature:_____

Export to PDF

Velocity Traverse Data	Pt.1	Pt.2	Pt.3	Pt.4	Pt.5	Pt.6	Pt.7	Pt.8	Center	
Initial dP	0.062	0.082	0.084	0.058	0.060	0.076	0.084	0.062	0.096	"H2O
Temp:	79	79	79	79	79	78	77	77	78	°F

V_{strav} 17.68 ft/sec V_{scent} 20.61 ft/sec F_p 0.858

	Particulate Sampling Data														Fuel Weight (lb)		Temperature Data (°F)												Stack Gas Data		
Elapsed Time (min)	Gas Meter 1 (ft^3)	Gas Meter 2 (ft^3)	Sample Rate 1 (cfm)	Sample Rate 2 (cfm)	Orifice dH 1 ("H_2O)	Meter 1 Temp (°F)	Meter 1 Vacuum ("Hg)	Orifice dH 2 ("H_2O)	Meter 2 Temp (°F)	Meter 2 Vacuum ("Hg)	Dilution Tunnel (°F)	Dilution Tunnel Center dP	Pro. Rate 1	Pro. Rate 2	Scale Reading	Weight Change	Firebox Top	Firebox Bottom	Firebox Back	Firebox Left	Firebox Right	Avg. Stove Surface	Catalyst Exit	Stack	Filter 1	Dryer Exit 1	Filter 2	Dryer Exit 2	Ambient	Draft ("H_2O)	CO_2 (%)	CO (%)
180	28.946	28.729	0.16	0.16	1.27	79	3.11	1.09	80	2.2	80	0.098	100	100	1.7	0	488	248	458	397	390	396	771	292	69	54	69	55	67	-0.049	10.8	0.07
181	29.107	28.889	0.16	0.16	1.27	79	3.11	1.09	80	2.2	80	0.096	101	101	1.7	0	483	248	459	397	390	395	761	290	69	54	69	55	67	-0.048	10.71	0.07
182	29.268	29.049	0.16	0.16	1.27	79	3.12	1.09	80	2.2	80	0.099	99	99	1.6	-0.1	479	249	460	397	391	395	754	287	69	54	69	55	68	-0.048	10.67	0.07
183	29.429	29.209	0.16	0.16	1.27	79	3.12	1.09	80	2.2	80	0.098	100	100	1.6	0	474	250	461	398	391	395	748	285	69	54	69	55	68	-0.047	10.7	0.07
184	29.589	29.370	0.16	0.16	1.27	79	3.11	1.09	80	2.2	80	0.098	99	100	1.6	0	470	250	462	398	391	394	744	283	69	54	69	55	67	-0.048	10.67	0.07
185	29.750	29.529	0.16	0.16	1.27	79	3.1	1.09	80	2.2	80	0.099	99	99	1.6	0	465	251	463	398	391	394	739	282	69	54	69	55	66	-0.047	10.56	0.07
186	29.911	29.689	0.16	0.16	1.27	79	3.11	1.09	80	2.2	80	0.101	98	98	1.5	-0.1	461	252	464	398	391	393	731	280	69	54	69	55	66	-0.047	10.35	0.06
187	30.073	29.850	0.16	0.16	1.27	79	3.12	1.09	80	2.2	79	0.100	99	99	1.5	0	457	252	464	398	391	392	722	277	69	54	69	55	66	-0.046	10.24	0.06
188	30.233	30.009	0.16	0.16	1.27	79	3.12	1.09	80	2.2	79	0.100	98	98	1.5	0	452	253	464	397	391	391	709	275	69	54	69	55	66	-0.046	10	0.06
189	30.394	30.169	0.16	0.16	1.28	79	3.11	1.09	80	2.2	79	0.098	100	100	1.5	0	447	254	464	398	391	391	699	272	69	54	69	55	67	-0.045	10.08	0.06
190	30.555	30.330	0.16	0.16	1.28	79	3.11	1.09	80	2.2	79	0.099	99	100	1.5	0	442	255	464	398	391	390	692	269	69	54	69	55	67	-0.045	10	0.06
191	30.715	30.489	0.16	0.16	1.27	79	3.12	1.09	80	2.2	79	0.099	99	99	1.4	-0.1	438	256	464	398	391	389	688	267	69	54	69	55	67	-0.044	9.97	0.06
192	30.877	30.649	0.16	0.16	1.28	79	3.1	1.09	80	2.2	79	0.098	100	100	1.4	0	434	256	463	398	391	388	685	265	69	53	69	55	67	-0.044	9.95	0.06
193	31.038	30.810	0.16	0.16	1.28	79	3.12	1.09	80	2.2	79	0.100	99	99	1.4	0	429	258	462	398	391	388	682	263	69	53	69	55	67	-0.044	9.93	0.06
194	31.199	30.970	0.16	0.16	1.27	79	3.12	1.09	80	2.2	79	0.099	99	99	1.4	0	426	258	461	397	391	387	679	261	69	53	69	55	67	-0.043	9.88	0.06
195	31.359	31.130	0.16	0.16	1.27	79	3.12	1.09	80	2.2	79	0.099	99	99	1.4	0	422	259	461	397	391	386	677	259	69	53	69	55	67	-0.043	9.87	0.06
196	31.520	31.290	0.16	0.16	1.28	79	3.11	1.09	80	2.2	79	0.098	100	100	1.4	0	419	260	459	397	391	385	675	258	69	53	69	55	67	-0.042	9.82	0.06
197	31.681	31.450	0.16	0.16	1.27	79	3.12	1.09	80	2.2	79	0.097	100	100	1.3	-0.1	416	261	458	397	392	385	674	257	69	53	69	55	67	-0.042	9.87	0.07
198	31.843	31.610	0.16	0.16	1.28	79	3.12	1.09	80	2.2	79	0.097	101	100	1.3	0	413	262	457	397	391	384	673	255	69	53	69	55	67	-0.042	9.87	0.07
199	32.004	31.771	0.16	0.16	1.26	79	3.11	1.09	80	2.2	78	0.097	100	101	1.3	0	410	263	456	396	391	383	670	254	69	53	69	55	67	-0.042	9.79	0.06
200	32.165	31.931	0.16	0.16	1.27	79	3.12	1.09	80	2.2	78	0.098	100	100	1.3	0	408	264	455	396	391	383	668	253	69	53	69	55	67	-0.042	9.82	0.07
201	32.325	32.090	0.16	0.16	1.28	79	3.11	1.09	80	2.2	78	0.099	99	99	1.3	0	405	265	454	396	391	382	667	251	69	53	69	55	67	-0.042	9.8	0.07
202	32.486	32.251	0.16	0.16	1.27	79	3.11	1.09	80	2.2	78	0.096	101	101	1.3	0	403	266	454	396	391	382	666	251	69	53	69	55	67	-0.041	9.85	0.07
203	32.647	32.411	0.16	0.16	1.28	79	3.11	1.09	80	2.2	78	0.098	100	100	1.3	0	401	267	453	396	391	382	666	250	69	53	69	55	67	-0.041	9.84	0.07
204	32.809	32.570	0.16	0.16	1.26	79	3.12	1.09	80	2.2	78	0.097	101	100	1.2	-0.1	399	268	452	395	391	381	665	249	69	53	69	55	67	-0.041	9.78	0.07
205	32.969	32.731	0.16	0.16	1.27	79	3.11	1.09	80	2.2	78	0.099	99	100	1.2	0	397	269	451	395	391	381	664	248	69	53	69	55	67	-0.041	9.77	0.07
206	33.130	32.891	0.16	0.16	1.27	79	3.1	1.09	80	2.2	78	0.100	99	99	1.2	0	396	269	450	394	391	380	662	247	69	53	68	55	67	-0.041	9.77	0.07
207	33.290	33.051	0.16	0.16	1.27	79	3.12	1.09	80	2.2	78	0.099	99	99	1.2	0	394	270	450	394	391	380	662	247	69	53	68	55	67	-0.041	9.78	0.07
208	33.451	33.211	0.16	0.16	1.28	79	3.12	1.09	80	2.2	78	0.099	99	99	1.2	0	393	271	449	394	391	380	661	247	69	53	69	55	67	-0.041	9.75	0.07
209	33.613	33.371	0.16	0.16	1.27	79	3.1	1.09	80	2.2	78	0.097	101	100	1.2	0	391	272	448	393	391	379	661	246	69	53	69	55	67	-0.040	9.73	0.07
210	33.774	33.531	0.16	0.16	1.28	79	3.11	1.09	80	2.2	78	0.099	99	99	1.1	-0.1	390	273	447	392	391	379	660	246	69	53	69	55	67	-0.040	9.74	0.08
211	33.935	33.691	0.16	0.16	1.27	79	3.12	1.09	80	2.2	78	0.098	100	100	1.1	0	389	273	447	392	391	378	660	245	69	53	69	55	67	-0.040	9.72	0.08
212	34.095	33.852	0.16	0.16	1.27	79	3.11	1.09	80	2.2	78	0.097	100	101	1.1	0	388	274	446	391	391	378	659	244	69	53	68	55	68	-0.040	9.69	0.07
213	34.256	34.011	0.16	0.16	1.28	79	3.11	1.09	80	2.2	78	0.098	100	99	1.1	0	387	275	445	391	391	378	658	244	69	53	68	55	67	-0.040	9.76	0.08
214	34.417	34.171	0.16	0.16	1.27	79	3.11	1.09	80	2.2	78	0.097	100	100	1.1	0	386	275	444	391	390	377	658	243	69	53	68	55	67	-0.040	9.78	0.08
215	34.579	34.332	0.16	0.16	1.27	79	3.11	1.09	80	2.2	78	0.098	100	100	1.1	0	385	276	443	390	390	377	659	242	69	53	68	55	67	-0.040	9.86	0.08

Wood Heater Test Data

Run: 2

Manufacturer: Kuma
Model: K-181
Tracking No.: 2461
Project No.: 0123WM013E
Test Date: 13-Dec-22
Beginning Clock Time: 12:35

Total Sampling Time: 279 min
Recording Interval: 1 min
Background Sample Volume: 57.64 cubic feet

Meter Box Y Factor: 1.004 (1) 1.002 (2) 1.016 (Amb)

Barometric Pressure:	Begin	Middle	End	Average	
	30.27	30.27	30.27	30.27	0

OMNI Equipment Numbers:

PM Control Modules: 335, 00336
Dilution Tunnel MW(dry): 29.00 lb/lb-mole
Dilution Tunnel MW(wet): 28.78 lb/lb-mole
Dilution Tunnel H2O: 2.00 percent
Dilution Tunnel Static: -0.290 "H2O
Tunnel Area: 0.19625 ft2
Pitot Tube Cp: 0.99

Avg. Tunnel Velocity: 17.89 ft/sec.
Initial Tunnel Flow: 202.3 scfm
Average Tunnel Flow: 204.1 scfm
Post-Test Leak Check (1): 0.000 cfm @ 14 in. Hg
Post-Test Leak Check (2): 0.000 cfm @ 17 in. Hg
Average Test Piece Fuel Moisture: 20.75 Dry Basis %

Technician Signature:_____

Export to PDF

Velocity Traverse Data

	Pt.1	Pt.2	Pt.3	Pt.4	Pt.5	Pt.6	Pt.7	Pt.8	Center	
Initial dP	0.062	0.082	0.084	0.058	0.060	0.076	0.084	0.062	0.096	"H2O
Temp:	79	79	79	79	79	78	77	77	78	°F

V_{strav} 17.68 ft/sec V_{scent} 20.61 ft/sec F_p 0.858

	Particulate Sampling Data														Fuel Weight (lb)		Temperature Data (°F)												Stack Gas Data		
Elapsed Time (min)	Gas Meter 1 (ft^3)	Gas Meter 2 (ft^3)	Sample Rate 1 (cfm)	Sample Rate 2 (cfm)	Orifice dH 1 ("H_2O)	Meter 1 Temp (°F)	Meter 1 Vacuum ("Hg)	Orifice dH 2 ("H_2O)	Meter 2 Temp (°F)	Meter 2 Vacuum ("Hg)	Dilution Tunnel (°F)	Dilution Tunnel Center dP	Pro. Rate 1	Pro. Rate 2	Scale Reading	Weight Change	Firebox Top	Firebox Bottom	Firebox Back	Firebox Left	Firebox Right	Avg. Stove Surface	Catalyst Exit	Stack	Filter 1	Dryer Exit 1	Filter 2	Dryer Exit 2	Ambient	Draft ("H_2O)	CO_2 (%)	CO (%)
216	34.740	34.492	0.16	0.16	1.28	79	3.11	1.09	80	2.2	78	0.099	99	99	1.1	0	384	277	442	390	390	377	660	242	69	53	68	55	67	-0.040	9.91	0.08
217	34.900	34.652	0.16	0.16	1.27	79	3.12	1.09	80	2.2	78	0.098	99	100	1.0	-0.1	383	277	441	389	390	376	661	241	69	53	68	55	67	-0.040	9.98	0.08
218	35.061	34.813	0.16	0.16	1.27	79	3.11	1.09	80	2.2	78	0.098	100	100	1.0	0	382	278	441	388	390	376	661	241	69	53	68	55	67	-0.039	9.92	0.08
219	35.222	34.972	0.16	0.16	1.28	79	3.12	1.09	80	2.2	78	0.097	100	100	1.0	0	382	279	440	388	390	376	662	241	69	53	68	55	67	-0.040	10.09	0.08
220	35.383	35.132	0.16	0.16	1.28	79	3.12	1.09	80	2.2	78	0.099	99	99	1.0	0	381	279	439	387	390	375	664	241	69	53	68	55	67	-0.039	10.09	0.08
221	35.545	35.293	0.16	0.16	1.27	79	3.11	1.09	80	2.2	77	0.099	100	100	1.0	0	381	280	438	386	390	375	666	241	69	53	68	55	67	-0.039	10.07	0.09
222	35.705	35.453	0.16	0.16	1.27	79	3.12	1.09	80	2.2	77	0.098	99	100	1.0	0	381	281	437	386	390	375	667	241	69	53	68	55	67	-0.040	10.07	0.09
223	35.866	35.613	0.16	0.16	1.27	79	3.11	1.09	80	2.2	77	0.097	100	100	0.9	-0.1	381	281	437	385	389	375	668	241	69	53	68	55	67	-0.039	10.06	0.09
224	36.027	35.774	0.16	0.16	1.27	79	3.12	1.09	80	2.2	77	0.096	101	101	0.9	0	381	282	436	384	390	375	670	241	69	53	68	55	67	-0.039	10.06	0.09
225	36.188	35.933	0.16	0.16	1.28	79	3.12	1.09	80	2.2	77	0.097	100	99	0.9	0	381	283	435	384	389	374	671	241	69	53	68	54	67	-0.039	10.04	0.09
226	36.349	36.093	0.16	0.16	1.27	79	3.11	1.09	80	2.2	77	0.097	100	100	0.9	0	380	283	434	383	389	374	673	241	69	53	68	55	68	-0.039	10.02	0.09
227	36.510	36.254	0.16	0.16	1.27	79	3.11	1.09	80	2.2	77	0.098	100	100	0.9	0	381	283	434	383	389	374	674	241	69	53	68	55	68	-0.040	10.09	0.1
228	36.671	36.413	0.16	0.16	1.27	79	3.12	1.09	80	2.2	77	0.098	100	99	0.9	0	381	284	433	382	389	374	676	241	69	53	68	55	67	-0.039	10.07	0.1
229	36.832	36.573	0.16	0.16	1.27	79	3.12	1.09	80	2.2	77	0.098	100	100	0.8	-0.1	381	285	432	381	389	374	678	241	69	53	68	55	67	-0.039	10.08	0.1
230	36.992	36.734	0.16	0.16	1.28	79	3.12	1.09	80	2.2	78	0.099	99	100	0.8	0	381	285	432	381	390	374	679	242	69	53	68	54	67	-0.039	10.1	0.1
231	37.153	36.894	0.16	0.16	1.28	79	3.12	1.09	80	2.2	78	0.096	101	101	0.8	0	381	286	431	380	390	374	680	242	68	53	68	54	67	-0.039	9.91	0.1
232	37.315	37.053	0.16	0.16	1.27	79	3.1	1.09	80	2.2	77	0.098	100	99	0.8	0	381	286	431	380	390	374	670	242	69	53	68	54	67	-0.039	10.28	0.08
233	37.476	37.214	0.16	0.16	1.27	79	3.11	1.09	80	2.2	77	0.098	100	100	0.8	0	380	287	430	379	390	373	657	241	68	53	68	54	67	-0.039	10.06	0.08
234	37.637	37.375	0.16	0.16	1.27	79	3.12	1.09	80	2.2	77	0.099	99	100	0.8	0	379	287	430	378	390	373	652	240	69	53	68	54	67	-0.039	9.94	0.08
235	37.797	37.534	0.16	0.16	1.27	79	3.12	1.09	80	2.2	77	0.096	100	100	0.8	0	378	287	429	378	390	372	651	239	68	53	68	54	67	-0.039	9.87	0.08
236	37.958	37.694	0.16	0.16	1.27	79	3.12	1.09	80	2.2	77	0.098	100	100	0.7	-0.1	377	288	429	377	390	372	651	238	69	53	68	54	67	-0.039	9.86	0.08
237	38.119	37.855	0.16	0.16	1.28	79	3.11	1.09	80	2.2	77	0.095	101	102	0.7	0	377	289	429	377	390	372	651	238	69	53	68	54	67	-0.039	9.81	0.08
238	38.281	38.014	0.16	0.16	1.28	79	3.11	1.09	80	2.2	77	0.099	100	98	0.7	0	376	289	428	375	391	372	652	238	69	53	68	54	67	-0.038	9.84	0.09
239	38.442	38.174	0.16	0.16	1.27	79	3.12	1.09	80	2.2	77	0.097	100	100	0.7	0	376	289	428	375	391	372	653	238	68	53	68	54	67	-0.039	9.81	0.08
240	38.602	38.335	0.16	0.16	1.27	79	3.11	1.09	80	2.2	77	0.097	99	101	0.7	0	375	290	428	375	391	372	653	237	68	53	68	54	67	-0.039	9.81	0.09
241	38.763	38.495	0.16	0.16	1.28	79	3.11	1.09	80	2.2	77	0.097	100	100	0.7	0	375	290	427	374	391	371	653	237	68	53	68	54	67	-0.039	9.79	0.09
242	38.924	38.655	0.16	0.16	1.27	79	3.11	1.09	80	2.2	77	0.098	100	100	0.7	0	374	291	427	373	391	371	655	237	68	53	68	54	67	-0.039	9.79	0.09
243	39.085	38.815	0.16	0.16	1.28	79	3.12	1.09	80	2.2	77	0.097	100	100	0.6	-0.1	374	292	427	373	391	371	657	237	68	53	68	54	67	-0.039	9.76	0.09
244	39.247	38.975	0.16	0.16	1.27	79	3.1	1.09	80	2.2	77	0.098	100	100	0.6	0	374	292	426	372	391	371	660	238	68	53	68	54	67	-0.039	9.75	0.1
245	39.408	39.135	0.16	0.16	1.27	79	3.11	1.09	80	2.2	77	0.097	100	100	0.6	0	374	293	426	372	391	371	661	238	68	53	68	54	67	-0.039	9.7	0.1
246	39.568	39.296	0.16	0.16	1.27	79	3.12	1.09	80	2.2	77	0.096	100	101	0.6	0	374	293	425	371	391	371	663	238	68	53	68	54	67	-0.039	9.73	0.11
247	39.729	39.455	0.16	0.16	1.28	79	3.11	1.09	80	2.2	77	0.098	100	99	0.6	0	375	294	425	370	391	371	665	238	68	53	68	54	67	-0.039	9.71	0.11
248	39.890	39.615	0.16	0.16	1.28	79	3.12	1.09	80	2.2	77	0.097	100	100	0.6	0	375	295	424	370	391	371	667	239	69	53	68	54	67	-0.039	9.67	0.11
249	40.052	39.776	0.16	0.16	1.28	79	3.11	1.09	80	2.2	77	0.097	101	101	0.5	-0.1	375	295	424	369	390	371	668	239	68	53	68	54	67	-0.039	9.62	0.11
250	40.212	39.935	0.16	0.16	1.27	79	3.11	1.09	80	2.2	77	0.096	100	100	0.5	0	375	296	424	369	390	371	670	239	68	53	68	54	67	-0.039	9.63	0.12
251	40.373	40.095	0.16	0.16	1.27	79	3.11	1.09	80	2.2	77	0.098	100	100	0.5	0	376	296	423	368	390	371	670	240	68	53	68	54	67	-0.039	9.67	0.12

Wood Heater Test Data

u

Run: 2

Manufacturer: Kuma
Model: K-181
Tracking No.: 2461
Project No.: 0123WM013E
Test Date: 13-Dec-22
Beginning Clock Time: 12:35

Total Sampling Time: 279 min
Recording Interval: 1 min
Background Sample Volume: 57.64 cubic feet

Meter Box Y Factor: 1.004 (1) 1.002 (2) 1.016 (Amb)

Barometric Pressure:	Begin	Middle	End	Average	
	30.27	30.27	30.27	30.27	0

OMNI Equipment Numbers:

PM Control Modules: 335, 00336
Dilution Tunnel MW(dry): 29.00 lb/lb-mole
Dilution Tunnel MW(wet): 28.78 lb/lb-mole
Dilution Tunnel H2O: 2.00 percent
Dilution Tunnel Static: -0.290 "H2O
Tunnel Area: 0.19625 ft2
Pitot Tube Cp: 0.99

Avg. Tunnel Velocity: 17.89 ft/sec.
Initial Tunnel Flow: 202.3 scfm
Average Tunnel Flow: 204.1 scfm
Post-Test Leak Check (1): 0.000 cfm @ 14 in. Hg
Post-Test Leak Check (2): 0.000 cfm @ 17 in. Hg
Average Test Piece Fuel Moisture: 20.75 Dry Basis %

Technician Signature:_____

Export to PDF

Velocity Traverse Data

	Pt.1	Pt.2	Pt.3	Pt.4	Pt.5	Pt.6	Pt.7	Pt.8	Center	
Initial dP	0.062	0.082	0.084	0.058	0.060	0.076	0.084	0.062	0.096	"H2O
Temp:	79	79	79	79	79	78	77	77	78	°F

V_{strav} 17.68 ft/sec V_{scent} 20.61 ft/sec F_p 0.858

	Particulate Sampling Data														Fuel Weight (lb)		Temperature Data (°F)												Stack Gas Data		
Elapsed Time (min)	Gas Meter 1 (ft^3)	Gas Meter 2 (ft^3)	Sample Rate 1 (cfm)	Sample Rate 2 (cfm)	Orifice dH 1 ("H_2O)	Meter 1 Temp (°F)	Meter 1 Vacuum ("Hg)	Orifice dH 2 ("H_2O)	Meter 2 Temp (°F)	Meter 2 Vacuum ("Hg)	Dilution Tunnel (°F)	Dilution Tunnel Center dP	Pro. Rate 1	Pro. Rate 2	Scale Reading	Weight Change	Firebox Top	Firebox Bottom	Firebox Back	Firebox Left	Firebox Right	Avg. Stove Surface	Catalyst Exit	Stack	Filter 1	Dryer Exit 1	Filter 2	Dryer Exit 2	Ambient	Draft ("H_2O)	CO_2 (%)	CO (%)
252	40.534	40.256	0.16	0.16	1.28	79	3.12	1.09	80	2.2	77	0.097	100	101	0.5	0	376	297	423	367	390	371	670	240	68	53	68	54	67	-0.040	9.56	0.12
253	40.695	40.416	0.16	0.16	1.27	79	3.12	1.09	80	2.2	77	0.097	100	100	0.5	0	376	298	422	367	390	371	670	240	69	53	68	54	67	-0.039	9.55	0.12
254	40.856	40.576	0.16	0.16	1.28	79	3.11	1.09	80	2.2	77	0.099	99	99	0.5	0	376	298	422	366	389	370	671	240	69	53	68	54	67	-0.039	9.52	0.12
255	41.018	40.737	0.16	0.16	1.27	79	3.11	1.09	80	2.2	77	0.098	100	100	0.5	0	377	299	421	365	389	370	674	241	68	53	68	54	67	-0.040	9.49	0.12
256	41.178	40.896	0.16	0.16	1.27	79	3.11	1.09	80	2.2	77	0.098	99	99	0.4	-0.1	377	299	420	365	389	370	676	241	68	53	68	54	67	-0.039	9.38	0.12
257	41.339	41.056	0.16	0.16	1.27	79	3.11	1.09	80	2.2	77	0.098	100	100	0.4	0	377	300	420	364	389	370	679	241	69	53	68	54	67	-0.039	9.31	0.13
258	41.499	41.217	0.16	0.16	1.27	79	3.12	1.09	80	2.2	77	0.098	99	100	0.4	0	378	300	419	364	388	370	682	242	69	53	68	54	67	-0.040	9.23	0.13
259	41.660	41.377	0.16	0.16	1.27	79	3.11	1.09	80	2.2	77	0.097	100	100	0.4	0	378	301	419	363	388	370	677	242	69	53	68	54	67	-0.039	9.47	0.11
260	41.822	41.536	0.16	0.16	1.27	79	3.11	1.09	80	2.2	77	0.099	100	98	0.4	0	378	302	418	363	388	370	670	241	68	53	68	54	67	-0.039	9.59	0.1
261	41.983	41.698	0.16	0.16	1.27	79	3.12	1.08	80	2.2	77	0.098	100	101	0.4	0	377	302	418	362	388	369	666	241	69	53	68	54	67	-0.039	9.48	0.1
262	42.144	41.857	0.16	0.16	1.27	79	3.12	1.08	80	2.2	77	0.098	100	99	0.4	0	376	303	417	364	387	369	665	241	69	53	68	54	67	-0.039	9.45	0.1
263	42.305	42.017	0.16	0.16	1.27	79	3.12	1.09	80	2.2	77	0.098	100	100	0.3	-0.1	376	304	417	363	387	369	664	240	68	53	68	54	67	-0.039	9.38	0.11
264	42.465	42.178	0.16	0.16	1.28	79	3.11	1.09	80	2.2	77	0.097	99	101	0.3	0	375	304	416	363	387	369	664	240	68	53	68	54	67	-0.040	9.41	0.11
265	42.626	42.338	0.16	0.16	1.28	79	3.12	1.09	80	2.2	77	0.098	100	100	0.3	0	375	305	415	363	386	369	665	240	68	53	68	54	67	-0.039	9.4	0.11
266	42.788	42.497	0.16	0.16	1.27	79	3.12	1.09	80	2.2	77	0.098	100	99	0.3	0	374	305	415	363	386	369	665	240	68	53	68	54	67	-0.039	9.38	0.11
267	42.949	42.658	0.16	0.16	1.28	79	3.11	1.09	80	2.2	77	0.098	100	100	0.3	0	374	305	414	362	386	368	665	240	68	53	68	54	67	-0.039	9.38	0.11
268	43.110	42.818	0.16	0.16	1.27	79	3.11	1.09	80	2.2	77	0.099	99	99	0.3	0	374	306	414	362	385	368	666	240	68	53	68	54	67	-0.039	9.34	0.11
269	43.271	42.978	0.16	0.16	1.28	79	3.11	1.09	80	2.2	77	0.097	100	100	0.3	0	373	307	413	362	385	368	668	239	68	53	68	54	67	-0.040	9.31	0.12
270	43.431	43.138	0.16	0.16	1.28	79	3.11	1.09	80	2.2	77	0.098	99	100	0.2	-0.1	373	307	413	362	384	368	671	240	68	53	68	54	67	-0.039	9.28	0.12
271	43.592	43.299	0.16	0.16	1.28	79	3.11	1.09	80	2.2	77	0.098	100	100	0.2	0	374	307	412	362	384	368	669	240	68	53	68	54	67	-0.039	9.51	0.1
272	43.755	43.458	0.16	0.16	1.27	79	3.11	1.09	80	2.2	76	0.098	101	99	0.2	0	373	308	411	362	383	367	665	240	68	53	68	54	67	-0.039	9.41	0.1
273	43.915	43.618	0.16	0.16	1.27	79	3.11	1.09	80	2.2	77	0.098	99	100	0.2	0	373	309	411	362	383	368	664	240	68	53	68	54	67	-0.039	9.37	0.1
274	44.076	43.779	0.16	0.16	1.27	79	3.12	1.09	80	2.2	77	0.098	100	100	0.2	0	372	309	411	362	382	367	664	240	68	53	68	54	67	-0.039	9.31	0.1
275	44.237	43.939	0.16	0.16	1.27	79	3.11	1.09	80	2.2	77	0.098	100	100	0.2	0	372	310	410	362	382	367	664	239	68	53	68	55	67	-0.039	9.24	0.11
276	44.398	44.099	0.16	0.16	1.28	79	3.11	1.09	80	2.2	77	0.099	99	99	0.2	0	372	310	410	361	382	367	669	240	68	53	68	54	67	-0.040	9.3	0.12
277	44.559	44.259	0.16	0.16	1.28	79	3.11	1.09	80	2.2	77	0.100	99	99	0.1	-0.1	373	311	410	361	381	367	673	240	68	53	68	55	67	-0.039	9.25	0.11
278	44.721	44.419	0.16	0.16	1.28	79	3.12	1.09	80	2.2	76	0.099	100	99	0.1	0	373	311	409	361	381	367	672	240	68	53	68	54	67	-0.039	9.19	0.11
279	44.882	44.579	0.16	0.16	1.27	79	3.11	1.09	80	2.2	77	0.101	98	98	0.0	-0.1	373	312	409	361	380	367	671	240	68	53	68	55	67	-0.039	9.19	0.11
Avg/Tot	44.882	44.579	0.16	0.16	1.28	78		1.09	79		80	0.098	100	100								21.2			52	69	53	67	-0.048		

Wood Heater Lab Data - ASTM E2780 / ASTM E2515

Manufacturer:	Kuma	Equipment Numbers:	
Model:	K-181		
Tracking No.:	2461		
Project No.:	0123WM013E		
Run #:	2		
Date:	12/13/22		

TRAIN 1 (First Hour emissions)

Sample Component	Reagent	Filter, Probe or Dish #	Weights		
			Final, mg	Tare, mg	Particulate, mg
B. Front filter catch	Filter	E852	120.4	119.5	0.9
C. Rear filter catch	Filter	E853	117.7	117.8	-0.1
D. Probe catch*	Probe	76	116960.8	116960.4	0.4
E. Filter seals catch*	Seals	S440	3342.3	3341.9	0.4

Sub-Total

Total Particulate, mg:	1.6

TRAIN 1 (Post First Hour Change-out)

Sample Component	Reagent	Filter, Probe or Dish #	Weights		
			Final, mg	Tare, mg	Particulate, mg
B. Front filter catch	Filter	E854	120.7	119.3	1.4
C. Rear filter catch	Filter	E855	118.9	119.3	-0.4
D. Probe catch*	Probe	84	117635.5	117635.4	0.1
E. Filter seals catch*	Seals	S441	3278.3	3277.5	0.8

Sub-Total

Total Particulate, mg:	1.9

Train 1 Aggregate

Total Particulate, mg:	**3.5**

TRAIN 2

Sample Component	Reagent	Filter, Probe or Dish #	Weights		
			Final, mg	Tare, mg	Particulate, mg
A. Front filter catch	Filter	E856	121.2	118.8	2.4
B. Rear filter catch	Filter	E857	118.2	118.1	0.1
C. Probe catch*	Probe	66	118455.0	118454.9	0.1
D. Filter seals catch*	Seals	S442	3283.8	3283.1	0.7

Total Particulate, mg:	**3.3**

AMBIENT

Sample Component	Reagent	Filter # or Probe #	Weights		
			Final, mg	Tare, mg	Particulate, mg
A. Front filter catch*	Filter	E858	116.7	116.9	0.0

Total Particulate, mg:	**0.0**

*Particulate catch that results in a negative number, is assumed to be zero for probes and seals, negative numbers for filters are assumed to be part of the seal weight.

Component	Equations:
A. Front filter catch	Final (mg) - Tare (mg) = Particulate, mg
B. Rear filter catch	Final (mg) - Tare (mg) = Particulate, mg
C. Probe catch	Final (mg) - Tare (mg) = Particulate, mg

Technician Signature:_____

Wood Heater Test Results - ASTM E2780 / ASTM E2515

Manufacturer:	Kuma
Model:	K-181
Project No.:	0123WM013E
Tracking No.:	2461
Run:	2
Test Date:	12/13/22

Burn Rate	**0.91**	**kg/hr dry**
Average Tunnel Temperature	80	degrees Fahrenheit
Average Gas Velocity in Dilution Tunnel - vs	17.89	feet/second
Average Gas Flow Rate in Dilution Tunnel - Qsd	12247.0	dscf/hour
Average Delta p	0.098	inches H20
Total Time of Test	279	minutes

	AMBIENT		SAMPLE TRAIN 1		SAMPLE TRAIN 2		FIRST HOUR FILTER (TRAIN 1)	
Total Sample Volume - Vm	57.640	cubic feet	44.882	cubic feet	44.579	cubic feet	9.661	cubic feet
Average Gas Meter Temperature	67	degrees Fahrenheit	78	degrees Fahrenheit	79	degrees Fahrenheit	75	degrees Fahrenheit
Total Sample Volume (Standard Conditions) - Vmstd	59.331	dscf	44.867	dscf	44.406	dscf	9.716	dscf
Total Particulates - m_n	0	mg	3.5	mg	3.3	mg	1.6	mg
Particulate Concentration (dry-standard) - C_f/C_s	0.000000	grams/dscf	0.00008	grams/dscf	0.00007	grams/dscf	0.00016	grams/dscf
Total Particulate Emissions - E_T	0.00	grams	4.44	grams	4.23	grams	2.02	grams
Particulate Emission Rate	0.00	grams/hour	0.96	grams/hour	0.91	grams/hour	2.02	grams/hour
Emissions Factor			1.05	g/kg	1.00	g/kg	2.44	g/kg
Difference from Average Total Particulate Emissions			0.11	grams	0.11	grams		

Dual Train Comparison Results Are Acceptable

FINAL AVERAGE RESULTS

Complete Test Run		
Total Particulate Emissions - E_T	4.34	grams
Particulate Emission Rate	**0.93**	**grams/hour**
Emissions Factor	1.02	grams/kg
First Hour Emissions		
Total Particulate Emissions - E_T	2.02	grams
Particulate Emission Rate	2.02	grams/hour
Emissions Factor	2.44	grams/kg
7.5% of Average Total Particulate Emissions	0.33	grams

QUALITY CHECKS

Filter Temps < 90 °F	OK
Filter Face Velocity (47 mm)	OK
Dryer Exit Temp < 80F	OK
Leakage Rate	OK
Ambient Temp (55-90°F)	OK
Negative Probe Weight Eval.	OK
Pro-Rate Variation	OK
Stove Surface ΔT	OK
Train Precesion 7.5%	2.42
Train Precision 0.5g/kg	0.05

Technician Signature:_____

Wood Heater Lab Data - ASTM E2780 / ASTM E2515

Manufacturer:	Kuma	Equipment Numbers:	
Model:	K-181		
Tracking No.:	2461		
Project No.:	0123WM013E		
Run #:	2		
Date:	12/13/22		

TRAIN 1 (First Hour emissions) Uncorrected

Sample Component	Reagent	Filter, Probe or Dish #	Weights		
			Final, mg	Tare, mg	Particulate, mg
B. Front filter catch	Filter	E852	120.4	119.5	0.9
C. Rear filter catch	Filter	E853	117.7	117.8	0.0
D. Probe catch*	Probe	76	116960.8	116960.4	0.4
E. Filter seals catch*	Seals	S440	3342.3	3341.9	0.4

Sub-Total Total Particulate, mg: 1.7

TRAIN 1 (Post First Hour Change-out)

Sample Component	Reagent	Filter, Probe or Dish #	Weights		
			Final, mg	Tare, mg	Particulate, mg
B. Front filter catch	Filter	E854	120.7	119.3	1.4
C. Rear filter catch	Filter	E855	118.9	119.3	0.0
D. Probe catch*	Probe	84	117635.5	117635.4	0.1
E. Filter seals catch*	Seals	S441	3278.3	3277.5	0.8

Sub-Total Total Particulate, mg: 2.3

Train 1 Aggregate Total Particulate, mg: **4.0**

TRAIN 2

Sample Component	Reagent	Filter, Probe or Dish #	Weights		
			Final, mg	Tare, mg	Particulate, mg
A. Front filter catch	Filter	E856	121.2	118.8	2.4
B. Rear filter catch	Filter	E857	118.2	118.1	0.1
C. Probe catch*	Probe	66	118455.0	118454.9	0.1
D. Filter seals catch*	Seals	S442	3283.8	3283.1	0.7

Total Particulate, mg: **3.3**

AMBIENT

Sample Component	Reagent	Filter # or Probe #	Weights		
			Final, mg	Tare, mg	Particulate, mg
A. Front filter catch*	Filter	E858	116.7	116.9	0.0

Total Particulate, mg: **0.0**

*Particulate catch that results in a negative number, is assumed to be zero for probes and seals, negative numbers for filters are assumed to be part of the seal weight.

Component	Equations:
A. Front filter catch	Final (mg) - Tare (mg) = Particulate, mg
B. Rear filter catch	Final (mg) - Tare (mg) = Particulate, mg
C. Probe catch	Final (mg) - Tare (mg) = Particulate, mg

Technician Signature:_____

Wood Heater Test Results - ASTM E2780 / ASTM E2515

Manufacturer:	Kuma
Model:	K-181
Project No.:	0123WM013E
Tracking No.:	2461
Run:	2
Test Date:	12/13/22

Burn Rate	**0.91 kg/hr dry**
Average Tunnel Temperature	80 degrees Fahrenheit
Average Gas Velocity in Dilution Tunnel - vs	17.89 feet/second
Average Gas Flow Rate in Dilution Tunnel - Qsd	12247.0 dscf/hour
Average Delta p	0.098 inches H20
Total Time of Test	279 minutes

Uncorrected

	AMBIENT	SAMPLE TRAIN 1	SAMPLE TRAIN 2	FIRST HOUR FILTER (TRAIN 1)
Total Sample Volume - Vm	57.640 cubic feet	44.882 cubic feet	44.579 cubic feet	9.661 cubic feet
Average Gas Meter Temperature	67 degrees Fahrenheit	78 degrees Fahrenheit	79 degrees Fahrenheit	75 degrees Fahrenheit
Total Sample Volume (Standard Conditions) - Vmstd	59.331 dscf	44.867 dscf	44.406 dscf	9.716 dscf
Total Particulates - m_n	0 mg	4 mg	3.3 mg	1.7 mg
Particulate Concentration (dry-standard) - C_r/C_s	0.000000 grams/dscf	0.00009 grams/dscf	0.00007 grams/dscf	0.00017 grams/dscf
Total Particulate Emissions - E_T	0.00 grams	5.08 grams	4.23 grams	2.14 grams
Particulate Emission Rate	0.00 grams/hour	1.09 grams/hour	0.91 grams/hour	2.14 grams/hour
Emissions Factor		1.20 g/kg	1.00 g/kg	2.59 g/kg
Difference from Average Total Particulate Emissions		0.42 grams	0.42 grams	

Dual Train Comparison Results Are Acceptable

FINAL AVERAGE RESULTS

Complete Test Run	
Total Particulate Emissions - E_T	4.65 grams
Particulate Emission Rate	**1.00 grams/hour**
Emissions Factor	1.10 grams/kg
First Hour Emissions	
Total Particulate Emissions - E_T	2.14 grams
Particulate Emission Rate	2.14 grams/hour
Emissions Factor	2.59 grams/kg
7.5% of Average Total Particulate Emissions	0.35 grams

QUALITY CHECKS

Filter Temps < 90 °F	OK
Filter Face Velocity (47 mm)	OK
Dryer Exit Temp < 80F	OK
Leakage Rate	OK
Ambient Temp (55-90°F)	OK
Negative Probe Weight Eval.	OK
Pro-Rate Variation	OK
Stove Surface ΔT	OK
Train Precesion 7.5%	9.08
Train Precision 0.5g/kg	0.20

Technician Signature:_____

VERSION: 2.4 4/15/2010

Manufacturer: Kuma Industries
Model: K-181
Date: 12/13/2022
Run: 2
Control #: 0123WM013E
Test Duration: 279
Output Category: 2

Appliance Type: Cat (Cat, Non-Cat, Pellet)

Temp. Units F (F or C)
Weight Units lb (kg or lb)

Default Fuel Values

	D. Fir	Oak
HHV (kJ/kg)	19,810	19,887
%C	48.73	50
%H	6.87	6.6
%O	43.9	42.9
%Ash	0.5	0.5

Wood Moisture (% wet): 17.18
Load Weight (lb wet): 11.30
Burn Rate (dry kg/h): 0.91
Total Particulate Emissions: 4.34 g

Fuel Data

	D. Fir	
HHV	19,810	kJ/kg
%C	48.73	
%H	6.87	
%O	43.9	
%Ash	0.5	

Note 1: For other fuels, use the heating value and fuel composition determined by analysis of fuel sample in accordance with Clause 9.2.

Note 2: In cases where the "Fuel Weight Remaining" is the same for three or more readings in a row, a "divide by zero error" will occur in the calculation sheet. In such cases, adjust the weight values by interpolation between the first occurence and the next reading showing a decrease in weight.

Averages		**0.13**	**10.74**	**#DIV/0!**	**285.69**	**67.05**
					Temp. (ºF)	
Elapsed Time (min)	**Fuel Weight Remaining (lb)**	**Flue Gas Composition (%) CO**	**CO_2**	**O_2**	**Flue Gas**	**Room Temp**
0	11.30	0.37	2.36		268.0	70.0
1	11.20	0.26	1.03		288.0	70.0
2	11.10	0.65	5.56		291.0	70.0
3	11.10	0.64	5.69		309.0	70.0
4	11.00	0.06	5.90		359.0	70.0
5	10.90	0.06	6.53		388.0	70.0
6	10.90	0.03	6.78		335.0	69.0
7	10.90	0.03	5.42		304.0	69.0
8	10.90	0.03	5.41		289.0	69.0
9	10.80	0.03	5.51		280.0	68.0
10	10.80	0.03	5.45		275.0	69.0
11	10.80	0.04	5.51		271.0	69.0
12	10.70	0.03	5.50		268.0	68.0
13	10.70	0.04	5.68		267.0	68.0
14	10.70	0.04	5.82		265.0	67.0
15	10.70	0.03	5.77		264.0	67.0
16	10.60	0.03	5.32		263.0	67.0
17	10.60	0.04	5.23		260.0	67.0
18	10.60	0.03	5.18		258.0	67.0

19	10.50	0.04	5.10		256.0	67.0
20	10.50	0.04	5.18		255.0	67.0
21	10.50	0.04	5.19		253.0	67.0
22	10.50	0.04	5.22		252.0	67.0
23	10.40	0.04	5.26		250.0	67.0
24	10.40	0.05	5.29		250.0	66.0
25	10.40	0.06	5.30		250.0	66.0
26	10.30	0.06	5.19		250.0	65.0
27	10.30	0.07	5.18		249.0	65.0
28	10.30	0.07	5.14		247.0	65.0
29	10.30	0.08	5.05		246.0	66.0
30	10.20	0.09	4.91		244.0	66.0
31	10.20	0.09	4.75		243.0	66.0
32	10.20	0.10	4.74		241.0	66.0
33	10.20	0.11	4.70		238.0	66.0
34	10.10	0.13	4.79		236.0	66.0
35	10.10	0.15	4.82		233.0	66.0
36	10.10	0.15	4.70		231.0	67.0
37	10.10	0.16	4.77		228.0	66.0
38	10.00	0.17	4.81		226.0	66.0
39	10.00	0.18	4.94		224.0	66.0
40	10.00	0.19	4.90		223.0	66.0
41	10.00	0.19	5.22		223.0	66.0
42	9.90	0.14	12.21		229.0	66.0
43	9.80	0.04	11.02		241.0	66.0
44	9.80	0.03	10.24		250.0	66.0
45	9.70	0.03	10.23		256.0	67.0
46	9.70	0.03	9.91		260.0	66.0
47	9.60	0.03	8.95		262.0	66.0
48	9.60	0.03	8.02		262.0	66.0
49	9.60	0.04	7.07		262	66
50	9.50	0.04	7.24		260	66
51	9.50	0.04	7.51		260	66
52	9.40	0.04	7.65		260	67
53	9.40	0.04	7.86		260	67
54	9.40	0.04	8.02		261	67
55	9.30	0.04	9		263	66
56	9.30	0.05	9.01		266	67
57	9.20	0.05	8.89		267	67

58	9.20	0.04	8.68		269	67
59	9.10	0.05	8.45		270	67
60	9.10	0.05	9.5		271	67
61	9.00	0.06	9.87		274	67
62	9.00	0.06	10.08		278	67
63	8.90	0.06	11.3		282	67
64	8.90	0.05	11.15		284	67
65	8.80	0.06	10.39		285	67
66	8.80	0.07	9.6		287	67
67	8.70	0.07	10.34		289	67
68	8.70	0.08	9.28		290	67
69	8.60	0.07	9.93		292	67
70	8.60	0.08	9.69		292	67
71	8.50	0.08	8.69		293	67
72	8.50	0.07	8.75		293	67
73	8.40	0.07	8.76		294	67
74	8.40	0.08	8.76		293	67
75	8.30	0.08	8.81		294	67
76	8.30	0.09	8.89		295	67
77	8.20	0.1	9.22		298	67
78	8.20	0.11	9.54		300	67
79	8.20	0.11	9.68		303	67
80	8.10	0.1	11.69		308	68
81	8.00	0.12	15.43		316	68
82	7.90	0.12	16.03		322	68
83	7.80	0.1	15.68		326	68
84	7.70	0.68	17.47		331	68
85	7.60	1.78	17.55		339	67
86	7.50	2.27	17.81		345	67
87	7.40	2.26	18		350	67
88	7.30	1.76	18.54		353	67
89	7.10	1.33	18.62		356	67
90	7.00	0.94	18.58		357	67
91	6.90	0.57	18.53		359	67
92	6.80	0.38	18.24		360	67
93	6.70	0.13	17.65		359	67
94	6.60	0.07	16.77		357	67
95	6.60	0.09	15.19		355	67
96	6.50	0.12	14.62		358	67

97	6.40	0.12	14.19		360	67
98	6.30	0.12	13.9		361	67
99	6.30	0.12	13.95		362	67
100	6.20	0.12	14.1		363	67
101	6.10	0.13	14.53		364	67
102	6.00	0.14	14.76		365	67
103	5.90	0.14	15.22		366	67
104	5.80	0.13	15.65		367	67
105	5.70	0.11	16.41		366	67
106	5.70	0.11	17.08		367	67
107	5.60	0.08	17.33		367	67
108	5.50	0.08	17.42		366	67
109	5.40	0.07	17.44		365	67
110	5.30	0.08	17.79		364	67
111	5.20	0.11	17.87		364	67
112	5.10	0.14	18.09		362	67
113	5.00	0.05	16.97		361	67
114	5.00	0.08	16.35		358	67
115	4.90	0.1	15.86		359	67
116	4.80	0.12	15.77		359	67
117	4.70	0.12	15.68		361	67
118	4.70	0.13	15.6		361	67
119	4.60	0.13	15.56		362	67
120	4.50	0.13	15.46		362	67
121	4.40	0.12	15.3		362	67
122	4.40	0.07	15.3		359	67
123	4.30	0.07	14.94		356	67
124	4.20	0.07	14.63		353	67
125	4.20	0.07	14.52		351	67
126	4.10	0.06	14.54		348	67
127	4.00	0.07	14.32		346	67
128	4.00	0.09	13.91		346	67
129	3.90	0.07	14.16		344	67
130	3.90	0.07	14.21		343	67
131	3.80	0.07	14.16		342	67
132	3.80	0.07	14.13		340	67
133	3.70	0.07	14.22		338	67
134	3.60	0.06	14.11		336	67
135	3.60	0.06	14		335	67

136	3.50	0.06	13.9		332	67
137	3.50	0.07	13.75		331	67
138	3.50	0.06	13.79		329	67
139	3.40	0.09	13.46		328	67
140	3.30	0.11	13.34		331	67
141	3.30	0.11	13.32		331	67
142	3.20	0.11	13.26		331	67
143	3.20	0.11	13.43		331	67
144	3.10	0.11	13.3		331	68
145	3.10	0.1	13.54		330	67
146	3.00	0.09	13.83		331	67
147	3.00	0.09	14		330	67
148	2.90	0.1	14.09		329	67
149	2.90	0.1	13.93		329	67
150	2.80	0.1	13.99		330	67
151	2.80	0.1	13.91		330	67
152	2.70	0.1	13.9		330	67
153	2.70	0.09	13.65		329	67
154	2.70	0.09	13.73		328	67
155	2.60	0.09	13.65		327	67
156	2.60	0.08	13.64		325	67
157	2.50	0.08	13.58		324	67
158	2.50	0.08	13.54		323	67
159	2.40	0.07	13.64		322	67
160	2.40	0.08	13.52		321	67
161	2.30	0.07	13.48		319	68
162	2.30	0.08	13.29		317	68
163	2.30	0.08	12.85		315	67
164	2.20	0.09	12.43		313	67
165	2.20	0.09	12.35		311	67
166	2.10	0.08	12.22		309	68
167	2.10	0.08	12.1		307	67
168	2.10	0.08	12.13		305	67
169	2.00	0.08	11.99		303	67
170	2.00	0.09	12.24		302	67
171	2.00	0.09	12.3		302	67
172	1.90	0.08	12.43		301	67
173	1.90	0.08	12.42		299	67
174	1.90	0.08	12.44		298	67

175	1.80	0.08	12.27		297	67
176	1.80	0.09	11.96		296	68
177	1.80	0.09	11.61		296	68
178	1.70	0.08	11.15		296	67
179	1.70	0.08	10.88		294	67
180	1.70	0.07	10.8		292	67
181	1.70	0.07	10.71		290	67
182	1.60	0.07	10.67		287	68
183	1.60	0.07	10.7		285	68
184	1.60	0.07	10.67		283	67
185	1.60	0.07	10.56		282	66
186	1.50	0.06	10.35		280	66
187	1.50	0.06	10.24		277	66
188	1.50	0.06	10		275	66
189	1.50	0.06	10.08		272	67
190	1.50	0.06	10		269	67
191	1.40	0.06	9.97		267	67
192	1.40	0.06	9.95		265	67
193	1.40	0.06	9.93		263	67
194	1.40	0.06	9.88		261	67
195	1.40	0.06	9.87		259	67
196	1.40	0.06	9.82		258	67
197	1.30	0.07	9.87		257	67
198	1.30	0.07	9.87		255	67
199	1.30	0.06	9.79		254	67
200	1.30	0.07	9.82		253	67
201	1.30	0.07	9.8		251	67
202	1.30	0.07	9.85		251	67
203	1.30	0.07	9.84		250	67
204	1.20	0.07	9.78		249	67
205	1.20	0.07	9.77		248	67
206	1.20	0.07	9.77		247	67
207	1.20	0.07	9.78		247	67
208	1.20	0.07	9.75		247	67
209	1.20	0.07	9.73		246	67
210	1.10	0.08	9.74		246	67
211	1.10	0.08	9.72		245	67
212	1.10	0.07	9.69		244	68
213	1.10	0.08	9.76		244	67

214	1.10	0.08	9.78		243	67
215	1.10	0.08	9.86		242	67
216	1.10	0.08	9.91		242	67
217	1.00	0.08	9.98		241	67
218	1.00	0.08	9.92		241	67
219	1.00	0.08	10.09		241	67
220	1.00	0.08	10.09		241	67
221	1.00	0.09	10.07		241	67
222	1.00	0.09	10.07		241	67
223	0.90	0.09	10.06		241	67
224	0.90	0.09	10.06		241	67
225	0.90	0.09	10.04		241	67
226	0.90	0.09	10.02		241	68
227	0.90	0.1	10.09		241	68
228	0.90	0.1	10.07		241	67
229	0.80	0.1	10.08		241	67
230	0.80	0.1	10.1		242	67
231	0.80	0.1	9.91		242	67
232	0.80	0.08	10.28		242	67
233	0.80	0.08	10.06		241	67
234	0.80	0.08	9.94		240	67
235	0.80	0.08	9.87		239	67
236	0.70	0.08	9.86		238	67
237	0.70	0.08	9.81		238	67
238	0.70	0.09	9.84		238	67
239	0.70	0.08	9.81		238	67
240	0.70	0.09	9.81		237	67
241	0.70	0.09	9.79		237	67
242	0.70	0.09	9.79		237	67
243	0.60	0.09	9.76		237	67
244	0.60	0.1	9.75		238	67
245	0.60	0.1	9.7		238	67
246	0.60	0.11	9.73		238	67
247	0.60	0.11	9.71		238	67
248	0.60	0.11	9.67		239	67
249	0.50	0.11	9.62		239	67
250	0.50	0.12	9.63		239	67
251	0.50	0.12	9.67		240	67
252	0.50	0.12	9.56		240	67

253	0.50	0.12	9.55		240	67
254	0.50	0.12	9.52		240	67
255	0.50	0.12	9.49		241	67
256	0.40	0.12	9.38		241	67
257	0.40	0.13	9.31		241	67
258	0.40	0.13	9.23		242	67
259	0.40	0.11	9.47		242	67
260	0.40	0.1	9.59		241	67
261	0.40	0.1	9.48		241	67
262	0.40	0.1	9.45		241	67
263	0.30	0.11	9.38		240	67
264	0.30	0.11	9.41		240	67
265	0.30	0.11	9.4		240	67
266	0.30	0.11	9.38		240	67
267	0.30	0.11	9.38		240	67
268	0.30	0.11	9.34		240	67
269	0.30	0.12	9.31		239	67
270	0.20	0.12	9.28		240	67
271	0.20	0.1	9.51		240	67
272	0.20	0.1	9.41		240	67
273	0.20	0.1	9.37		240	67
274	0.20	0.1	9.31		240	67
275	0.20	0.11	9.24		239	67
276	0.20	0.12	9.3		240	67
277	0.10	0.11	9.25		240	67
278	0.10	0.11	9.19		240	67
279	0.00	0.11	9.19		240	67

ABC Laboratories, Inc.

Manufacturer: Kuma Industries
Model: K-181
Date: 12/13/22
Run: 2
Control #: 0123WM013E
Test Duration: 279
Output Category: 2

Technicians: _____

_____

_____

Test Results in Accordance with CSA B415.1-10

	HHV Basis	LHV Basis
Overall Efficiency	79.7%	86.1%
Combustion Efficiency	98.9%	98.9%
Heat Transfer Efficiency	81%	87.0%

Output Rate (kJ/h)	14,411	13,670	**(Btu/h)**
Burn Rate (kg/h)	0.91	2.01	**(lb/h)**
Input (kJ/h)	18,090	17,160	**(Btu/h)**

Test Load Weight (dry kg)	4.25	9.36	**dry lb**
MC wet (%)	17.18		
MC dry (%)	20.74		
Particulate (g)	4.34		
CO (g)	80		
Test Duration (h)	4.65		

Emissions	Particulate	CO
g/MJ Output	0.06	1.19
g/kg Dry Fuel	1.02	18.84
g/h	0.93	17.20
lb/MM Btu Output	0.15	2.77

Air/Fuel Ratio (A/F)	10.38

VERSION: **2.4** **4/15/2010**

6OMNI-Test Laboratories, Inc. **ASTM E2780 Wood Heater Run Sheets**

Client: Kuma Project Number: 0123WM013E Run Number: 2

Model: K-181 Tracking Number: 2461 Date: 12/13/2022

Test Crew: TT, BD

OMNI Equipment ID numbers: 00637, 00709, 00283A

ASTM E2515 Lab Sheet

Assembled By:

Tony Tong

Date/Time in Dessicator:

12/13/22, 17:30

	Weighing #1	Weighing #2	Weighing #3	Weighing #4	Weighing #5
Date/Time:	12/21/22, 9:00	12/21/22, 10:00	12/22/22 9:00	12/22/22 15:10	
R/H %:	9.6	11.2	8.0	9.6	
Temp:	63.3	64.7	58.8	61.5	
200 mg Audit:	200.1	200.1	200.0	200.0	
2 g Audit:	2000.3	2000.3	2000.3	2000.3	
100 g Audit:	99997.9	99998.0	99997.9	99997.9	
Initials:	TT	TT	TT	TT	

Train	Element	ID #	Tare (mg)	Weight (mg)	Weight (mg)	Weight (mg)	Weight (mg)	Weight (mg)
A (First Hour)	Front Filter	E852	119.5	120.4	120.4			
	Rear Filter	E853	117.8	117.7	117.7			
	Probe	76	116960.4	116960.9	116960.8			
	O-Ring Set	S440	3341.9	3342.5	3342.3			
A (Remainder)	Front Filter	E854	119.3	120.7	120.7			
	Rear Filter	E855	119.3	119.0	118.9			
	Probe	84	117635.4	117635.6	117635.5			
	O-Ring Set	S441	3277.5	3278.3	3278.3			
B	Front Filter	E856	118.8	121.2	121.2			
	Rear Filter	E857	118.1	118.2	118.2			
	Probe	66	118454.9	118455.0	118455.3	118452.9	118455.0	
	O-Ring Set	S442	3283.1	3283.8	3283.8			
BG	Filter	E858	116.9	116.7	116.7			

Technician Signature: Tony Tong Date: 12/22/2022

6OMNI-Test Laboratories, Inc. **ASTM E2780 Wood Heater Run Sheets**

Client: Kuma Project Number: 0123WM013E Run Number: 2

Model: K-181 Tracking Number: 2461 Date: 12/13/2022

Test Crew: TT, BD

OMNI Equipment ID numbers: 00335, 00336, 00594, 00185

Wood Heater Run Notes

Air Control Settings

Primary:

Push air control all the way to the ~~stop~~

Secondary: Fixed

Tertiary/Pilot: N/A

Fan: On Low @ 30 mins

Preburn Notes

Time	Notes
8:09	Loading first rick, 4.7 lbs and 4 lbs kindling.
9:52	Adding second rick 9.5 lbs at 1.1 lbs coal
10:50	Adding preburn load 9.5 lbs at 1.5 lbs coal
11:20	Recording Preburn data @ 4.8 lbs

Test Notes

Sketch test fuel configuration:

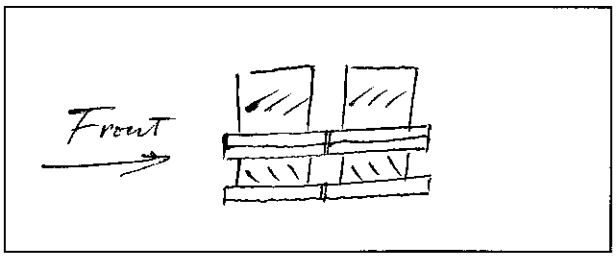

Start up procedures & Timeline:

Bypass: Used for fuel loading

Fuel loaded by: 60 seconds

Door closed at: 70 seconds

Primary air: ~~Open for 5 mins, then fully closed.~~

Notes: ~~Fan off for first 30 min, then on low for the~~ remainder of test.

Time	Notes
12:35	Test started
13:35	First hour filters changed
17:14	Test ended

Technician Signature: Tony Tong Date: 12/13/22

6OMNI-Test Laboratories, Inc. **ASTM E2780 Wood Heater Run Sheets**

Client: Kuma Project Number: 0123WM013E Run Number: 2

Model: K-181 Tracking Number: 2461 Date: 12/13/2022

Test Crew: TT, BD

OMNI Equipment ID numbers: 20594, 00335, 00336, 00322, 00410, 00716, 00255, 00677

Wood Heater Supplemental Data

Start Time: 12:36 Booth #: E1

Stop Time: 17:14

Stack Gas Leak Check:

Initial: good Final: good

Sample Train Leak Check:

A: 0.000 @ 14.20 "Hg

B: 0.000 @ 17.32 "Hg

Calibrations: Span Gas CO_2: 16.94/10.08 CO: 4.32/2.53

	Pre Test		Post Test	
	Zero	Span	Zero	Span
Time	11:45	11:48	17:27	17:29
CO_2	0.00	16.94/10.08	0.00	16.83/10.06
CO	0.00	4.34/2.51	0.00	4.33/2.50

Air Velocity (ft/min): Initial: <50 Final: <50

Scale Audit (lbs): Initial: 10 Final: 10

Pitot Tube Leak Test: Initial: No leak Final: No leak

Stack Diameter (in): 6

Induced Draft: >.001

% Smoke Capture: 100

Flue Pipe Cleaned Prior to First Test in Series:

Date: 12/01/22 Initials: TT

	Initial	Middle	Ending
P_b (in/Hg)	30.27	30.27	30.27
RH (%)	36 %	36 %	36 %
Ambient (°F)	70	67	67

Tunnel Traverse

Microtector Reading	dP (in H_2O)	T(°F)
1	.062	79
2	.082	79
3	.084	79
4	.058	79
5	.060	79
6	.076	78
7	.084	77
8	.062	77
Center:		
	0.096	78

Background Filter Volume: 57.640 ft^3

Tunnel Static Pressure (in H_2O):	
Beginning of Test	End of Test
-0.30	-0.28

Technician Signature: Tony Tong Date: 12/13/22

ASTM E2780 Wood Heater Run Sheets

Client: Kuma Project Number: 0123WM013E Run Number: 2
Model: K-181 Tracking Number: 2461 Date: 12/13/2022
Test Crew: TT, BD
OMNI Equipment ID numbers: 02340, 00431, T61, 00353

Wood Heater Fuel Data

Fuel: Douglas fir, untreated and air dried, standard grade or better dimensional lumber

Pre-Burn Fuel

Calibration: Cal Value (1) = 12% Actual Reading 12.9
Cal Value (2) = 22% Actual Reading 22.9

Piece:	Length:	Reading:	Piece:	Length:	Reading:
1	12 in	19.7	7	12 in	22.7
2	12 in	20.1	8	____ in	____
3	12 in	19.9	9	____ in	____
4	12 in	21.1	10	____ in	____
5	12 in	24.9	11	____ in	____
6	12 in	19.9	12	____ in	____

Total Pre-Burn Fuel Weight: 9.5 Pre-Burn Fuel Average Moisture: ____

Time (clock): 10:35 Room Temperature (F): 68 Initials: TT

Test Fuel

Firebox Volume (ft³): 1.731
Load Weight Range (lb): (10.9, 13.3)
Test Fuel Piece Length (in): 15.25
Total Wet Fuel Load Weight (lb): 11.3 (2.26, 2.82)

Fuel Type & Amount: 2 x 4: 2 4 x 4: 2
Weight (with spacers): 4.1 Weight (with spacers): 7.2

Piece:	Weight (lbs):	Moisture Readings (%DB):			Fuel Type:
1	1.6	20.4	19.3	21.5	2x4
2	1.6	19.9	19.3	22.3	2x4
3	3.8	21.3	24.3	24.8	4x4
4	3.1	21.9	19.0	19.3	4x4
5	____	____	____	____	____
6	____	____	DB AVG =	21.125	____
7	____	____	WB =	17.44%	____

1 Kg/hr = 4.22

Spacer Moisture Readings (%DB)

22.5	24.4	18.3	10.1	22.4	18.9	16.1	9.5
9.6	9.9	9.9	10.3	____	____	____	____
____	____	____	____	____	____	____	____
____	____	____	____	____	____	____	____

Time (clock): 10:55 Room Temperature (F): 68 Initials: TT

Technician Signature: Tony Tong Date: 12/13/22

Run 3

Medium Low Burn (Category II)

Wood Heater Preburn Data - ASTM E2780

Run: 3

Technician Signature:_____

Manufacturer:	Kuma
Model:	K-181
Tracking No.:	2461
Project No.:	0123WM013E
Test Date:	12/14/22
Beginning Clock Time:	11:08

Preburn Fuel Data

Fuel Piece Lengths (in.):	12		
Total Preburn Weight (lb):	9.7		
Fuel Moisture Readings (% DB):	19.1	21.5	22.6
	24.7	23.8	22.8
	23.8	19.8	
Avg Preburn Moisture (% DB):	**22.26**		

Coal Bed Range (lb):	**2.3** (min)	**2.8** (max)

			Temperatures (°F)							
Elapsed Time (min)	Scale (lb)	Stack Draft (in H_2O)	FB Top	FB Bottom	FB Back	FB Left	FB Right	Avg. FB	Stack	Ambient
0	5	-0.081	696	313	457	503	510	496	611	70
1	4.9	-0.08	708	317	470	505	515	503	533	69
2	4.7	-0.078	709	320	481	507	519	507	492	70
3	4.6	-0.075	709	322	490	508	522	510	466	69
4	4.5	-0.074	707	324	497	509	526	513	447	69
5	4.4	-0.071	705	325	501	511	528	514	433	69
6	4.3	-0.071	703	326	503	511	530	515	423	69
7	4.2	-0.069	700	327	505	512	532	515	414	69
8	4.1	-0.069	697	328	505	512	532	515	406	69
9	4.1	-0.068	694	329	505	512	533	515	399	69
10	4	-0.067	690	329	504	511	532	513	392	69
11	3.9	-0.067	686	330	504	511	532	513	386	70
12	3.8	-0.065	682	330	502	510	531	511	381	69
13	3.8	-0.065	678	331	501	510	530	510	376	69
14	3.7	-0.064	675	331	500	509	529	509	370	69
15	3.6	-0.064	670	331	499	508	527	507	365	69
16	3.6	-0.062	665	331	498	507	526	505	359	69
17	3.5	-0.061	660	331	497	506	525	504	353	69
18	3.5	-0.06	652	331	496	505	524	502	347	69
19	3.5	-0.06	644	331	495	504	522	499	342	69
20	3.4	-0.058	636	331	494	503	521	497	337	69
21	3.4	-0.058	628	331	493	503	519	495	333	69
22	3.3	-0.057	619	330	492	501	518	492	328	69
23	3.3	-0.055	611	330	491	500	516	490	324	69
24	3.3	-0.056	603	331	490	499	514	487	321	70
25	3.2	-0.055	595	330	489	498	512	485	317	69
26	3.2	-0.054	587	330	488	496	511	482	313	69
27	3.2	-0.054	580	329	487	495	509	480	309	69
28	3.1	-0.052	572	329	487	494	507	478	307	69
29	3.1	-0.052	564	329	487	493	505	476	303	68
30	3.1	-0.052	557	328	486	491	503	473	301	69
31	3.1	-0.052	550	328	486	490	501	471	299	70
32	3	-0.052	544	328	485	488	499	469	297	69
33	3	-0.051	538	328	485	487	498	467	295	69
34	3	-0.051	532	328	484	486	496	465	293	69
35	3	-0.051	527	328	484	484	494	463	291	69
36	2.9	-0.051	522	328	483	483	492	462	288	69
37	2.9	-0.05	517	328	482	481	490	460	286	69
38	2.9	-0.05	513	327	481	479	489	458	285	69
39	2.9	-0.049	509	327	480	478	487	456	283	69

Wood Heater Preburn Data - ASTM E2780

Run: 3

Technician Signature:_____

Manufacturer:	Kuma
Model:	K-181
Tracking No.:	2461
Project No.:	0123WM013E
Test Date:	12/14/22
Beginning Clock Time:	11:08

Preburn Fuel Data

Fuel Piece Lengths (in.):	12		
Total Preburn Weight (lb):	9.7		
Fuel Moisture Readings (% DB):	19.1	21.5	22.6
	24.7	23.8	22.8
	23.8	19.8	
Avg Preburn Moisture (% DB):	**22.26**		

Coal Bed Range (lb):	**2.3** (min)	**2.8** (max)

			Temperatures (°F)							
Elapsed Time (min)	Scale (lb)	Stack Draft (in H_2O)	FB Top	FB Bottom	FB Back	FB Left	FB Right	Avg. FB	Stack	Ambient
40	2.9	-0.049	505	327	479	476	485	454	281	69
41	2.8	-0.048	502	326	478	475	484	453	279	69
42	2.8	-0.048	498	326	476	473	482	451	278	69
43	2.8	-0.048	495	326	475	472	480	450	277	69
44	2.8	-0.047	492	326	474	470	478	448	275	69
45	2.8	-0.047	488	326	473	469	477	447	274	69
46	2.7	-0.047	485	325	472	467	475	445	272	69
47	2.7	-0.046	482	325	471	465	474	443	271	69
48	2.7	-0.046	478	325	470	464	472	442	269	69
49	2.7	-0.046	475	325	469	462	470	440	268	69
50	2.7	-0.045	473	324	468	460	469	439	267	69
51	2.7	-0.046	470	325	467	459	467	438	266	69
52	2.6	-0.045	466	324	465	457	465	435	264	69
53	2.6	-0.044	461	324	463	455	464	433	262	69
54	2.6	-0.044	455	323	461	453	462	431	259	69
55	2.6	-0.044	450	323	459	452	461	429	257	69
56	2.6	-0.044	445	323	456	450	459	427	255	69
57	2.6	-0.043	441	323	454	448	457	425	252	69
58	2.6	-0.043	437	322	451	447	456	423	251	69
59	2.6	-0.043	433	322	449	445	454	421	249	68
60	2.5	-0.042	429	322	446	443	452	418	247	68
61	2.5	-0.042	426	322	443	441	450	416	246	69
62	2.5	-0.041	422	322	441	439	448	414	244	68
63	2.5	-0.041	420	322	438	437	447	413	243	69
64	2.5	-0.041	417	322	435	436	445	411	242	69
65	2.5	-0.041	414	322	433	434	443	409	241	69
66	2.5	-0.041	412	322	430	432	442	408	240	69
67	2.5	-0.041	410	322	427	430	440	406	240	68
68	2.4	-0.04	408	322	425	429	438	404	239	69
69	2.4	-0.04	406	321	423	427	436	403	237	68
70	2.4	-0.04	404	321	420	425	435	401	237	69
71	2.4	-0.04	402	321	418	424	433	400	236	69
72	2.4	-0.04	401	322	415	422	431	398	235	68
73	2.4	-0.04	399	321	413	421	430	397	235	69
74	2.4	-0.039	398	321	411	419	428	395	234	68
75	2.4	-0.039	397	320	409	418	427	394	234	69
76	2.4	-0.04	396	320	407	417	425	393	233	69
77	2.3	-0.039	395	320	405	415	424	392	233	69
78	2.3	-0.039	394	319	403	414	422	390	232	69
79	2.3	-0.039	393	319	401	413	421	389	231	69

Wood Heater Test Fuel Data - ASTM E2780

Manufacturer:	Kuma
Model:	K-181
Tracking No.:	2461
Project No.:	0123WM013E
Test Date:	12/14/2022
Run No.:	3

Firebox Volume (ft^3):	1.731
Fuel Piece Length (in):	15.25
2x4 Crib Weight (lb):	4.2
4x4 Crib Weight (lb):	7.1

Total Fuel Weight (Dry Basis, lb):	9.3	
Fuel Density (lb/ft^3, Dry Basis):	26.50	OK
Loading Density (lb/ft^3, Wet Basis):	6.53	OK
2x4 Percentage:	37%	OK

Coal Bed Range (20-25%): **2.26 - 2.825**

Test Fuel Piece	Weight (lb)	Size	Readings (Dry Basis %)			Dry Weight (lb)
1	1.6	2"x 4"	22.0	19.2	19.5	1.33
2	1.6	2"x 4"	20.1	19.9	19.7	1.33
3	3.7	4"x 4"	22.2	22.5	19.7	3.05
4	3.0	4"x 4"	23.3	20.8	19.5	2.48

Spacer Readings (Dry Basis %)			
22.1	23.8	24.5	23.8
24.4	24.4	21.9	20.6
19.3	24.8	21.5	19.8

Technician Signature:_____

Wood Heater Test Data

u

Run: 3

Manufacturer: Kuma
Model: K-181
Tracking No.: 2461
Project No.: 0123WM013E
Test Date: 14-Dec-22
Beginning Clock Time: 12:29

Total Sampling Time: 305 min
Recording Interval: 1 min
Background Sample Volume: 62.944 cubic feet

Meter Box Y Factor: 1.004 (1) 1.002 (2) 1.016 (Amb)

Barometric Pressure:	Begin	Middle	End	Average	
	30.39	30.37	30.4	30.39	0

OMNI Equipment Numbers:

PM Control Modules: 335, 00336
Dilution Tunnel MW(dry): 29.00 lb/lb-mole
Dilution Tunnel MW(wet): 28.78 lb/lb-mole
Dilution Tunnel H2O: 2.00 percent
Dilution Tunnel Static: -0.300 "H2O
Tunnel Area: 0.19625 ft2
Pitot Tube Cp: 0.99

Avg. Tunnel Velocity: 18.00 ft/sec.
Initial Tunnel Flow: 205.7 scfm
Average Tunnel Flow: 205.5 scfm
Post-Test Leak Check (1): 0.000 cfm @ 16 in. Hg
Post-Test Leak Check (2): 0.000 cfm @ 17 in. Hg
Average Test Piece Fuel Moisture: 21.13 Dry Basis %

Technician Signature:_____

Export to PDF

Velocity Traverse Data

	Pt.1	Pt.2	Pt.3	Pt.4	Pt.5	Pt.6	Pt.7	Pt.8	Center	
Initial dP	0.066	0.086	0.090	0.060	0.054	0.080	0.088	0.064	0.098	"H2O
Temp:	80	80	80	80	80	80	80	80	81	°F

V_{strav} 17.96 ft/sec V_{scent} 20.85 ft/sec F_p 0.862

	Particulate Sampling Data														Fuel Weight (lb)		Temperature Data (°F)											Stack Gas Data		
Elapsed Time (min)	Gas Meter 1 (ft^3)	Gas Meter 2 (ft^3)	Sample Rate 1 (cfm)	Sample Rate 2 (cfm)	Orifice dH 1 ("H_2O)	Meter 1 Temp (°F)	Meter 1 Vacuum ("Hg)	Orifice dH 2 ("H_2O)	Meter 2 Temp (°F)	Meter 2 Vacuum ("Hg)	Dilution Tunnel (°F)	Dilution Tunnel Center dP	Pro. Rate 1	Pro. Rate 2	Scale Reading	Weight Change	Firebox Top	Firebox Bottom	Firebox Back	Firebox Left	Firebox Right	Avg. Stove Surface	Catalyst Exit	Stack	Filter 1	Dryer Exit 1	Filter 2	Dryer Exit 2	Ambient	Draft ("H_2O)	CO_2 (%)	CO (%)
0	0.000	0.000			1.20	73	2.67	1.06	73	2.2	95	0.098			11.3		396	321	403	411	419	390	511	281	68	43	68	43	69	-0.042	1.5	0.4
1	0.151	0.154	0.15	0.15	1.27	73	2.76	1.12	73	2.3	119	0.094	100	103	12.1	0.8	392	322	403	410	418	389	389	290	69	40	69	41	69	-0.049	1.01	0.28
2	0.309	0.316	0.16	0.16	1.27	73	2.75	1.12	73	2.3	100	0.095	103	106	11.2	-0.9	386	313	403	408	417	385	441	305	70	40	70	41	69	-0.058	3.65	0.29
3	0.467	0.475	0.16	0.16	1.27	73	2.74	1.11	73	2.3	95	0.095	102	103	11.1	-0.1	388	307	401	406	416	384	649	358	70	40	70	41	69	-0.065	7.27	0.08
4	0.626	0.635	0.16	0.16	1.26	73	2.74	1.10	73	2.3	95	0.095	103	104	11.0	-0.1	394	302	399	404	414	383	764	403	70	40	70	41	69	-0.069	9.05	0.1
5	0.784	0.795	0.16	0.16	1.25	73	2.74	1.10	74	2.2	96	0.096	102	103	10.9	-0.1	404	298	397	401	412	382	832	438	71	40	70	41	69	-0.072	9.32	0.09
6	0.941	0.954	0.16	0.16	1.26	73	2.73	1.10	74	2.2	88	0.096	101	102	10.9	0	416	302	394	398	410	384	812	372	71	40	70	41	69	-0.059	10.77	0.07
7	1.100	1.113	0.16	0.16	1.25	74	2.71	1.10	74	2.2	86	0.097	101	101	10.9	0	423	304	390	395	407	384	757	338	71	41	70	41	69	-0.057	6.12	0.04
8	1.257	1.273	0.16	0.16	1.25	74	2.71	1.09	74	2.2	85	0.095	101	103	10.8	-0.1	425	304	387	392	404	382	700	316	71	41	70	41	69	-0.055	5.86	0.04
9	1.414	1.431	0.16	0.16	1.25	74	2.72	1.09	74	2.2	85	0.097	100	100	10.8	0	425	305	384	389	402	381	668	303	71	41	70	41	68	-0.054	5.85	0.04
10	1.574	1.590	0.16	0.16	1.29	74	2.77	1.09	74	2.2	85	0.094	103	103	10.8	0	424	305	381	386	399	379	651	293	71	41	70	41	69	-0.053	5.9	0.03
11	1.734	1.750	0.16	0.16	1.29	74	2.76	1.08	74	2.2	84	0.096	102	102	10.7	-0.1	423	306	377	382	396	377	646	287	71	41	70	42	69	-0.053	6.43	0.04
12	1.893	1.908	0.16	0.16	1.28	74	2.75	1.09	74	2.2	84	0.097	101	100	10.7	0	422	305	374	379	392	374	655	285	71	41	70	42	69	-0.053	6.9	0.04
13	2.052	2.068	0.16	0.16	1.28	74	2.76	1.08	74	2.2	84	0.095	102	103	10.6	-0.1	422	305	370	375	389	372	661	283	71	41	70	42	69	-0.053	6.72	0.04
14	2.212	2.225	0.16	0.16	1.28	74	2.75	1.08	74	2.2	84	0.098	101	99	10.6	0	421	305	367	372	386	370	659	282	71	42	70	42	69	-0.053	6.31	0.04
15	2.373	2.384	0.16	0.16	1.28	74	2.75	1.08	74	2.2	84	0.097	102	101	10.6	0	420	304	364	368	383	368	652	280	71	42	70	42	69	-0.053	6.38	0.05
16	2.532	2.543	0.16	0.16	1.27	74	2.76	1.08	75	2.2	84	0.095	102	102	10.5	-0.1	419	304	360	365	379	365	648	278	71	42	71	42	69	-0.052	6.47	0.04
17	2.691	2.702	0.16	0.16	1.28	75	2.75	1.08	75	2.2	84	0.097	101	101	10.5	0	417	303	357	361	376	363	647	277	71	42	71	42	68	-0.052	6.61	0.05
18	2.851	2.861	0.16	0.16	1.28	75	2.76	1.08	75	2.2	84	0.097	101	101	10.4	-0.1	416	303	354	358	373	361	650	277	71	42	71	42	69	-0.052	6.84	0.05
19	3.011	3.019	0.16	0.16	1.28	75	2.76	1.08	75	2.2	83	0.097	101	100	10.4	0	416	301	351	354	370	358	661	278	71	42	71	43	69	-0.052	7.25	0.06
20	3.171	3.178	0.16	0.16	1.28	75	2.76	1.08	75	2.2	83	0.097	101	101	10.4	0	416	301	347	351	367	356	677	279	71	42	71	43	68	-0.053	7.83	0.05
21	3.330	3.338	0.16	0.16	1.28	75	2.75	1.08	75	2.2	83	0.096	101	102	10.3	-0.1	417	300	344	348	364	355	686	281	71	43	71	43	69	-0.053	7.27	0.06
22	3.489	3.495	0.16	0.16	1.28	75	2.75	1.08	75	2.2	83	0.096	101	100	10.3	0	418	299	341	345	361	353	687	281	71	43	71	43	69	-0.053	7.21	0.06
23	3.649	3.654	0.16	0.16	1.28	75	2.76	1.08	76	2.2	83	0.095	102	101	10.2	-0.1	418	298	339	342	358	351	685	282	71	43	71	43	69	-0.053	7.53	0.05
24	3.809	3.813	0.16	0.16	1.27	76	2.76	1.08	76	2.2	83	0.095	102	101	10.2	0	418	297	336	340	355	349	691	282	71	43	71	43	68	-0.053	7.91	0.05
25	3.969	3.971	0.16	0.16	1.27	76	2.75	1.08	76	2.2	83	0.095	102	101	10.1	-0.1	419	296	333	337	352	347	704	284	71	43	71	44	69	-0.053	8.29	0.05
26	4.128	4.131	0.16	0.16	1.28	76	2.74	1.08	76	2.2	84	0.097	100	101	10.1	0	421	295	330	334	350	346	719	285	71	43	71	44	69	-0.053	8.2	0.06
27	4.288	4.289	0.16	0.16	1.28	76	2.75	1.08	76	2.2	83	0.095	102	101	10.0	-0.1	423	293	328	332	347	345	722	287	71	44	71	44	69	-0.053	7.74	0.06
28	4.449	4.448	0.16	0.16	1.27	76	2.74	1.08	76	2.2	83	0.096	102	101	10.0	0	424	292	325	329	345	343	717	287	71	44	71	44	68	-0.053	7.66	0.06
29	4.608	4.607	0.16	0.16	1.27	76	2.74	1.08	76	2.2	83	0.097	100	100	9.9	-0.1	425	291	323	327	343	342	713	287	71	44	71	44	69	-0.054	7.96	0.06
30	4.768	4.766	0.16	0.16	1.28	76	2.75	1.08	76	2.2	83	0.095	102	101	9.9	0	426	290	321	325	340	340	718	288	71	44	71	44	69	-0.054	8.43	0.06
31	4.928	4.924	0.16	0.16	1.28	76	2.75	1.08	77	2.2	82	0.096	101	100	9.8	-0.1	421	289	318	323	339	338	732	290	71	44	71	44	69	-0.055	8.9	0.06
32	5.088	5.084	0.16	0.16	1.28	77	2.76	1.08	77	2.2	82	0.096	101	101	9.8	0	419	288	315	322	337	336	748	292	71	44	71	45	69	-0.055	9.54	0.06
33	5.248	5.242	0.16	0.16	1.28	77	2.75	1.08	77	2.2	82	0.096	101	100	9.7	-0.1	419	287	312	320	336	335	767	294	71	45	71	45	69	-0.055	9.92	0.07
34	5.408	5.402	0.16	0.16	1.28	77	2.76	1.08	77	2.2	82	0.098	100	100	9.7	0	420	286	310	319	334	334	784	299	71	45	71	45	69	-0.056	11.43	0.08
35	5.567	5.560	0.16	0.16	1.28	77	2.75	1.08	77	2.2	82	0.095	101	101	9.6	-0.1	425	285	307	318	333	334	835	305	71	45	71	45	69	-0.058	13.61	0.08

Wood Heater Test Data

u

Run: 3

Manufacturer: Kuma
Model: K-181
Tracking No.: 2461
Project No.: 0123WM013E
Test Date: 14-Dec-22
Beginning Clock Time: 12:29

Total Sampling Time: 305 min
Recording Interval: 1 min
Background Sample Volume: 62.944 cubic feet

Meter Box Y Factor: 1.004 (1) 1.002 (2) 1.016 (Amb)

Barometric Pressure:	Begin	Middle	End	Average	
	30.39	30.37	30.4	30.39	0

OMNI Equipment Numbers:

PM Control Modules: 335, 00336
Dilution Tunnel MW(dry): 29.00 lb/lb-mole
Dilution Tunnel MW(wet): 28.78 lb/lb-mole
Dilution Tunnel H2O: 2.00 percent
Dilution Tunnel Static: -0.300 "H2O
Tunnel Area: 0.19625 ft2
Pitot Tube Cp: 0.99

Avg. Tunnel Velocity: 18.00 ft/sec.
Initial Tunnel Flow: 205.7 scfm
Average Tunnel Flow: 205.5 scfm
Post-Test Leak Check (1): 0.000 cfm @ 16 in. Hg
Post-Test Leak Check (2): 0.000 cfm @ 17 in. Hg
Average Test Piece Fuel Moisture: 21.13 Dry Basis %

Technician Signature:_____

Export to PDF

Velocity Traverse Data

	Pt.1	Pt.2	Pt.3	Pt.4	Pt.5	Pt.6	Pt.7	Pt.8	Center	
Initial dP	0.066	0.086	0.090	0.060	0.054	0.080	0.088	0.064	0.098	"H2O
Temp:	80	80	80	80	80	80	80	80	81	°F

V_{strav} 17.96 ft/sec V_{scent} 20.85 ft/sec F_p 0.862

	Particulate Sampling Data														Fuel Weight (lb)		Temperature Data (°F)												Stack Gas Data			
Elapsed Time (min)	Gas Meter 1 (ft^3)	Gas Meter 2 (ft^3)	Sample Rate 1 (cfm)	Sample Rate 2 (cfm)	Orifice dH 1 ("H_2O)	Meter 1 Temp (°F)	Meter 1 Vacuum ("Hg)	Orifice dH 2 ("H_2O)	Meter 2 Temp (°F)	Meter 2 Vacuum ("Hg)	Dilution Tunnel (°F)	Dilution Tunnel Center dP	Pro. Rate 1	Pro. Rate 2	Scale Reading	Weight Change	Firebox Top	Firebox Bottom	Firebox Back	Firebox Left	Firebox Right	Avg. Stove Surface	Catalyst Exit	Stack	Filter 1	Dryer Exit 1	Filter 2	Dryer Exit 2	Ambient	Draft ("H_2O)	CO_2 (%)	CO (%)
36	5.727	5.719	0.16	0.16	1.28	77	2.76	1.08	77	2.2	82	0.095	102	101	9.5	-0.1	433	284	305	316	331	334	873	313	71	45	71	45	69	-0.058	14.29	0.09
37	5.889	5.878	0.16	0.16	1.28	77	2.76	1.08	77	2.2	83	0.097	102	100	9.4	-0.1	445	283	303	315	330	335	918	320	71	45	71	45	69	-0.059	13.64	0.1
38	6.048	6.037	0.16	0.16	1.27	77	2.76	1.08	77	2.2	82	0.098	99	100	9.3	-0.1	457	282	300	314	329	336	927	325	71	45	71	45	69	-0.060	13.01	0.09
39	6.208	6.196	0.16	0.16	1.27	77	2.76	1.08	78	2.2	83	0.096	101	101	9.2	-0.1	466	281	299	314	327	337	929	328	71	45	71	46	69	-0.060	13.16	0.09
40	6.368	6.355	0.16	0.16	1.28	78	2.76	1.08	78	2.2	83	0.096	101	101	9.2	0	475	279	297	313	326	338	943	334	71	46	71	46	68	-0.061	13.84	0.11
41	6.528	6.513	0.16	0.16	1.28	78	2.75	1.08	78	2.2	83	0.096	101	100	9.1	-0.1	485	278	296	312	326	339	966	339	71	46	71	46	68	-0.062	14.58	0.12
42	6.689	6.673	0.16	0.16	1.28	78	2.75	1.08	78	2.2	83	0.097	101	101	9.0	-0.1	495	277	295	311	325	341	993	346	71	46	71	46	69	-0.062	15.48	0.14
43	6.849	6.831	0.16	0.16	1.28	78	2.75	1.07	78	2.2	84	0.096	101	100	8.9	-0.1	506	276	294	311	324	342	1011	351	71	46	71	46	69	-0.063	15.82	0.14
44	7.009	6.990	0.16	0.16	1.28	78	2.76	1.08	78	2.2	84	0.097	101	100	8.8	-0.1	517	275	294	310	323	344	1017	356	72	46	71	46	69	-0.064	15.56	0.13
45	7.169	7.150	0.16	0.16	1.28	78	2.77	1.08	78	2.2	84	0.096	101	101	8.7	-0.1	526	274	294	310	323	345	1013	360	72	46	71	46	69	-0.064	15.56	0.11
46	7.329	7.308	0.16	0.16	1.28	78	2.77	1.08	78	2.2	85	0.095	102	101	8.6	-0.1	534	273	294	310	323	347	1009	362	72	46	71	46	69	-0.064	15.16	0.11
47	7.490	7.467	0.16	0.16	1.28	78	2.77	1.08	78	2.2	85	0.094	103	102	8.5	-0.1	541	272	294	310	322	348	1006	363	72	47	71	47	68	-0.064	15	0.11
48	7.650	7.628	0.16	0.16	1.28	78	2.78	1.10	78	2.3	85	0.097	101	102	8.5	0	546	271	294	310	322	349	995	362	72	47	71	47	69	-0.063	14.18	0.1
49	7.811	7.788	0.16	0.16	1.29	78	2.77	1.10	79	2.3	85	0.096	102	101	8.4	-0.1	550	270	295	310	322	349	992	362	72	47	71	47	69	-0.064	14.01	0.1
50	7.971	7.949	0.16	0.16	1.28	79	2.78	1.09	79	2.3	85	0.095	102	102	8.3	-0.1	553	269	295	310	322	350	987	362	72	47	71	47	69	-0.063	14.63	0.1
51	8.132	8.110	0.16	0.16	1.29	79	2.78	1.09	79	2.3	85	0.096	102	102	8.2	-0.1	555	268	296	310	322	350	973	362	72	47	71	47	69	-0.063	14.82	0.09
52	8.294	8.269	0.16	0.16	1.29	79	2.77	1.10	79	2.3	85	0.097	102	100	8.1	-0.1	556	267	296	311	322	350	964	360	72	47	71	47	69	-0.063	14.58	0.08
53	8.455	8.430	0.16	0.16	1.29	79	2.78	1.10	79	2.3	85	0.094	103	103	8.1	0	557	266	296	312	322	351	955	359	72	47	71	47	69	-0.064	14.26	0.08
54	8.616	8.591	0.16	0.16	1.28	79	2.78	1.10	79	2.3	85	0.096	102	102	8.0	-0.1	557	265	297	313	322	351	947	357	72	47	71	47	69	-0.061	13.86	0.07
55	8.777	8.751	0.16	0.16	1.29	79	2.78	1.10	79	2.3	85	0.096	102	101	7.9	-0.1	558	264	296	314	322	351	950	355	72	48	71	48	69	-0.063	13.3	0.08
56	8.938	8.911	0.16	0.16	1.29	79	2.77	1.10	79	2.3	85	0.096	102	101	7.9	0	558	263	296	316	323	351	935	352	72	48	71	48	69	-0.061	12.19	0.07
57	9.099	9.072	0.16	0.16	1.29	79	2.77	1.10	79	2.3	85	0.094	103	103	7.8	-0.1	557	262	296	317	323	351	923	350	72	48	71	48	69	-0.062	11.93	0.07
58	9.261	9.233	0.16	0.16	1.29	79	2.77	1.10	79	2.3	85	0.096	102	102	7.7	-0.1	554	261	296	318	324	351	906	347	72	48	71	48	69	-0.062	11.8	0.07
59	9.422	9.393	0.16	0.16	1.29	79	2.77	1.10	79	2.3	85	0.096	102	101	7.7	0	550	260	295	319	324	350	896	344	72	48	71	48	69	-0.061	11.79	0.06
60	9.583	9.553	0.16	0.16	1.29	79	2.79	1.10	79	2.3	85	0.096	102	101	7.6	-0.1	547	259	295	320	325	349	896	342	72	48	71	48	69	-0.061	11.99	0.07
61	9.742	9.715	0.16	0.16	1.32	79	3.28	1.10	79	2.3	84	0.095	101	103	7.5	-0.1	544	258	294	320	325	348	894	340	68	48	71	48	69	-0.062	12.06	0.07
62	9.903	9.875	0.16	0.16	1.28	79	3.18	1.10	80	2.3	85	0.095	102	102	7.5	0	541	257	293	321	326	348	893	339	68	48	71	48	69	-0.060	12.34	0.07
63	10.065	10.035	0.16	0.16	1.27	79	3.19	1.10	80	2.3	85	0.096	102	101	7.4	-0.1	539	256	293	321	327	347	892	338	69	48	71	48	68	-0.060	12.39	0.07
64	10.225	10.197	0.16	0.16	1.27	79	3.18	1.10	80	2.3	85	0.096	101	102	7.4	0	536	256	292	322	328	347	891	337	69	49	71	48	69	-0.061	12.47	0.07
65	10.385	10.357	0.16	0.16	1.28	80	3.19	1.09	80	2.3	85	0.095	101	102	7.3	-0.1	535	255	291	322	328	346	899	337	69	49	71	48	68	-0.061	12.76	0.08
66	10.545	10.517	0.16	0.16	1.28	80	3.17	1.10	80	2.3	84	0.097	100	100	7.2	-0.1	534	254	290	322	329	346	901	337	69	49	71	49	68	-0.058	13	0.08
67	10.705	10.678	0.16	0.16	1.28	80	3.19	1.10	80	2.3	85	0.095	101	102	7.2	0	534	253	290	323	330	346	908	339	69	49	71	49	69	-0.059	13.27	0.08
68	10.867	10.839	0.16	0.16	1.28	80	3.18	1.10	80	2.3	85	0.096	102	102	7.1	-0.1	534	253	289	323	331	346	913	340	69	49	71	49	69	-0.059	13.45	0.08
69	11.027	11.000	0.16	0.16	1.27	80	3.18	1.10	80	2.3	84	0.094	102	103	7.0	-0.1	535	252	289	323	332	346	915	339	70	49	71	49	69	-0.063	13.75	0.08
70	11.187	11.160	0.16	0.16	1.27	80	3.19	1.10	80	2.3	84	0.096	101	101	7.0	0	536	251	288	323	333	346	917	340	70	49	71	49	69	-0.060	13.89	0.08
71	11.347	11.322	0.16	0.16	1.27	80	3.2	1.10	80	2.3	84	0.096	101	102	6.9	-0.1	537	250	288	324	334	347	923	340	70	49	71	49	69	-0.063	13.82	0.08

Wood Heater Test Data

u

Run: 3

Manufacturer: Kuma
Model: K-181
Tracking No.: 2461
Project No.: 0123WM013E
Test Date: 14-Dec-22
Beginning Clock Time: 12:29

Total Sampling Time: 305 min
Recording Interval: 1 min
Background Sample Volume: 62.944 cubic feet

Meter Box Y Factor: 1.004 (1) 1.002 (2) 1.016 (Amb)

Barometric Pressure:	Begin	Middle	End	Average	
	30.39	30.37	30.4	30.39	0

OMNI Equipment Numbers:

PM Control Modules: 335, 00336
Dilution Tunnel MW(dry): 29.00 lb/lb-mole
Dilution Tunnel MW(wet): 28.78 lb/lb-mole
Dilution Tunnel H2O: 2.00 percent
Dilution Tunnel Static: -0.300 "H2O
Tunnel Area: 0.19625 ft2
Pitot Tube Cp: 0.99

Avg. Tunnel Velocity: 18.00 ft/sec.
Initial Tunnel Flow: 205.7 scfm
Average Tunnel Flow: 205.5 scfm
Post-Test Leak Check (1): 0.000 cfm @ 16 in. Hg
Post-Test Leak Check (2): 0.000 cfm @ 17 in. Hg
Average Test Piece Fuel Moisture: 21.13 Dry Basis %

Technician Signature:_____

Export to PDF

Velocity Traverse Data

	Pt.1	Pt.2	Pt.3	Pt.4	Pt.5	Pt.6	Pt.7	Pt.8	Center	
Initial dP	0.066	0.086	0.090	0.060	0.054	0.080	0.088	0.064	0.098	"H2O
Temp:	80	80	80	80	80	80	80	80	81	°F

V_{strav} 17.96 ft/sec V_{scent} 20.85 ft/sec F_p 0.862

	Particulate Sampling Data														Fuel Weight (lb)		Temperature Data (°F)												Stack Gas Data		
Elapsed Time (min)	Gas Meter 1 (ft^3)	Gas Meter 2 (ft^3)	Sample Rate 1 (cfm)	Sample Rate 2 (cfm)	Orifice dH 1 ("H_2O)	Meter 1 Temp (°F)	Meter 1 Vacuum ("Hg)	Orifice dH 2 ("H_2O)	Meter 2 Temp (°F)	Meter 2 Vacuum ("Hg)	Dilution Tunnel (°F)	Dilution Tunnel Center dP	Pro. Rate 1	Pro. Rate 2	Scale Reading	Weight Change	Firebox Top	Firebox Bottom	Firebox Back	Firebox Left	Firebox Right	Avg. Stove Surface	Catalyst Exit	Stack	Filter 1	Dryer Exit 1	Filter 2	Dryer Exit 2	Ambient	Draft ("H_2O)	CO_2 (%)	CO (%)
72	11.508	11.482	0.16	0.16	1.28	80	3.19	1.10	80	2.3	84	0.095	102	101	6.8	-0.1	539	250	288	324	335	347	922	341	70	49	71	49	69	-0.058	13.8	0.08
73	11.669	11.643	0.16	0.16	1.28	80	3.19	1.10	80	2.3	85	0.097	101	101	6.7	-0.1	541	249	288	324	336	348	923	341	70	49	71	49	69	-0.059	13.9	0.08
74	11.829	11.804	0.16	0.16	1.28	80	3.19	1.09	80	2.3	84	0.095	101	102	6.7	0	543	249	288	325	337	348	927	342	70	49	71	49	69	-0.059	14.01	0.08
75	11.989	11.965	0.16	0.16	1.27	80	3.2	1.10	80	2.3	84	0.098	100	101	6.6	-0.1	545	248	288	325	339	349	930	343	70	49	71	49	69	-0.068	14.2	0.09
76	12.150	12.125	0.16	0.16	1.28	80	3.18	1.10	80	2.3	84	0.096	101	101	6.5	-0.1	547	248	288	326	340	350	937	345	70	50	71	49	69	-0.069	14.34	0.09
77	12.310	12.286	0.16	0.16	1.27	80	3.19	1.10	80	2.3	84	0.094	102	103	6.5	0	549	248	289	326	341	351	939	345	70	50	71	49	69	-0.056	14.43	0.09
78	12.471	12.447	0.16	0.16	1.28	80	3.18	1.10	80	2.3	84	0.095	102	102	6.4	-0.1	551	247	289	327	342	351	942	345	70	50	71	49	69	-0.060	14.75	0.09
79	12.632	12.607	0.16	0.16	1.30	80	3.22	1.10	80	2.3	85	0.093	103	103	6.3	-0.1	562	246	289	328	344	354	1045	348	71	50	71	49	69	-0.061	15.18	0.21
80	12.794	12.768	0.16	0.16	1.29	80	3.23	1.10	80	2.3	85	0.091	105	104	6.3	0	577	246	290	328	345	357	1088	353	71	50	71	50	69	-0.062	15.58	0.24
81	12.956	12.930	0.16	0.16	1.30	80	3.24	1.10	80	2.3	85	0.099	101	101	6.2	-0.1	591	245	290	329	346	360	1102	358	71	50	71	50	69	-0.063	15.6	0.25
82	13.118	13.090	0.16	0.16	1.30	80	3.23	1.10	80	2.3	85	0.100	100	99	6.1	-0.1	605	245	290	329	347	363	1105	362	71	50	71	50	69	-0.063	15.36	0.26
83	13.280	13.251	0.16	0.16	1.30	80	3.23	1.10	80	2.3	85	0.098	101	101	6.0	-0.1	615	244	291	330	348	366	1099	364	71	50	71	50	69	-0.062	14.79	0.25
84	13.441	13.412	0.16	0.16	1.30	80	3.23	1.10	80	2.3	85	0.098	100	101	6.0	0	624	244	291	330	348	367	1093	365	71	50	71	50	69	-0.063	14.38	0.25
85	13.604	13.573	0.16	0.16	1.31	80	3.22	1.10	81	2.3	86	0.099	101	100	5.9	-0.1	630	243	292	330	349	369	1087	366	71	50	71	50	69	-0.063	14.11	0.25
86	13.767	13.733	0.16	0.16	1.29	80	3.23	1.10	81	2.3	86	0.097	102	100	5.9	0	635	243	292	331	350	370	1081	366	71	50	71	50	69	-0.063	13.93	0.25
87	13.928	13.894	0.16	0.16	1.30	80	3.23	1.10	81	2.3	86	0.100	100	100	5.8	-0.1	638	242	293	331	351	371	1076	366	71	50	71	50	69	-0.063	13.86	0.25
88	14.090	14.056	0.16	0.16	1.30	80	3.24	1.10	81	2.3	86	0.098	101	101	5.7	-0.1	640	242	293	332	351	372	1075	366	71	50	71	50	69	-0.062	13.84	0.25
89	14.252	14.216	0.16	0.16	1.29	80	3.24	1.10	81	2.3	86	0.097	102	100	5.7	0	642	242	294	332	352	372	1074	366	71	50	71	50	69	-0.063	13.87	0.24
90	14.414	14.377	0.16	0.16	1.30	81	3.22	1.10	81	2.3	86	0.097	102	101	5.6	-0.1	644	241	294	333	353	373	1074	367	71	50	72	50	69	-0.063	13.88	0.25
91	14.576	14.538	0.16	0.16	1.30	81	3.24	1.09	81	2.3	86	0.096	102	102	5.6	0	645	241	295	333	354	374	1075	367	71	50	72	50	69	-0.063	13.93	0.25
92	14.738	14.699	0.16	0.16	1.30	81	3.22	1.09	81	2.3	86	0.099	100	100	5.5	-0.1	648	241	295	334	355	375	1075	368	71	50	72	50	69	-0.063	13.89	0.25
93	14.901	14.859	0.16	0.16	1.30	81	3.24	1.10	81	2.3	86	0.099	101	99	5.4	-0.1	648	240	296	334	356	375	1074	368	72	51	72	50	69	-0.063	13.96	0.25
94	15.063	15.020	0.16	0.16	1.30	81	3.24	1.10	81	2.3	86	0.099	100	100	5.4	0	649	240	297	335	356	375	1075	368	72	51	72	50	69	-0.063	13.96	0.25
95	15.225	15.182	0.16	0.16	1.29	81	3.24	1.10	81	2.3	86	0.098	101	101	5.3	-0.1	649	240	297	335	357	376	1073	368	72	51	72	50	69	-0.063	13.87	0.25
96	15.387	15.342	0.16	0.16	1.29	81	3.23	1.10	81	2.3	86	0.096	102	101	5.2	-0.1	649	240	298	336	358	376	1070	368	72	51	72	50	69	-0.063	13.82	0.25
97	15.549	15.503	0.16	0.16	1.30	81	3.23	1.10	81	2.3	86	0.097	102	101	5.2	0	649	239	298	337	359	376	1066	367	72	51	72	50	69	-0.063	13.73	0.25
98	15.710	15.665	0.16	0.16	1.30	81	3.24	1.10	81	2.3	86	0.097	101	102	5.1	-0.1	648	239	299	337	360	377	1062	367	72	51	72	50	69	-0.063	13.66	0.25
99	15.873	15.825	0.16	0.16	1.30	81	3.24	1.10	81	2.3	86	0.097	102	100	5.1	0	647	239	300	338	361	377	1059	366	72	51	72	50	69	-0.063	13.79	0.25
100	16.035	15.986	0.16	0.16	1.30	81	3.24	1.10	81	2.3	86	0.100	100	100	5.0	-0.1	646	239	301	339	362	377	1058	367	72	51	72	50	69	-0.063	13.87	0.26
101	16.196	16.147	0.16	0.16	1.28	81	3.2	1.10	81	2.3	86	0.100	99	100	4.9	-0.1	645	239	301	340	363	378	1057	366	72	51	72	51	69	-0.062	13.79	0.26
102	16.357	16.308	0.16	0.16	1.27	81	3.19	1.10	81	2.3	86	0.095	102	102	4.9	0	644	238	302	340	364	378	1055	366	72	51	72	51	69	-0.063	13.69	0.25
103	16.517	16.469	0.16	0.16	1.28	81	3.19	1.10	81	2.3	86	0.096	101	102	4.8	-0.1	643	238	303	341	365	378	1056	366	72	51	72	51	69	-0.063	13.69	0.25
104	16.678	16.629	0.16	0.16	1.28	81	3.2	1.10	81	2.3	86	0.098	100	100	4.8	0	643	238	304	342	366	379	1055	366	72	51	72	51	69	-0.062	13.8	0.26
105	16.839	16.791	0.16	0.16	1.28	81	3.2	1.10	81	2.3	86	0.098	100	101	4.7	-0.1	642	238	305	342	367	379	1054	365	72	51	72	51	69	-0.062	13.69	0.25
106	17.000	16.951	0.16	0.16	1.28	81	3.2	1.10	81	2.3	86	0.099	100	99	4.7	0	641	238	305	343	368	379	1053	365	72	51	72	51	69	-0.062	13.6	0.25
107	17.161	17.112	0.16	0.16	1.28	81	3.2	1.10	81	2.3	86	0.096	101	102	4.6	-0.1	640	238	306	344	368	379	1051	364	72	51	72	51	69	-0.062	13.45	0.25

Wood Heater Test Data

u

Run: 3

Manufacturer: Kuma
Model: K-181
Tracking No.: 2461
Project No.: 0123WM013E
Test Date: 14-Dec-22
Beginning Clock Time: 12:29

Total Sampling Time: 305 min
Recording Interval: 1 min
Background Sample Volume: 62.944 cubic feet

Meter Box Y Factor: 1.004 (1) 1.002 (2) 1.016 (Amb)

Barometric Pressure:	Begin	Middle	End	Average	
	30.39	30.37	30.4	30.39	0

OMNI Equipment Numbers:

PM Control Modules: 335, 00336
Dilution Tunnel MW(dry): 29.00 lb/lb-mole
Dilution Tunnel MW(wet): 28.78 lb/lb-mole
Dilution Tunnel H2O: 2.00 percent
Dilution Tunnel Static: -0.300 "H2O
Tunnel Area: 0.19625 ft2
Pitot Tube Cp: 0.99

Avg. Tunnel Velocity: 18.00 ft/sec.
Initial Tunnel Flow: 205.7 scfm
Average Tunnel Flow: 205.5 scfm
Post-Test Leak Check (1): 0.000 cfm @ 16 in. Hg
Post-Test Leak Check (2): 0.000 cfm @ 17 in. Hg
Average Test Piece Fuel Moisture: 21.13 Dry Basis %

Technician Signature:_____

Export to PDF

Velocity Traverse Data										
	Pt.1	Pt.2	Pt.3	Pt.4	Pt.5	Pt.6	Pt.7	Pt.8	Center	
Initial dP	0.066	0.086	0.090	0.060	0.054	0.080	0.088	0.064	0.098	"H2O
Temp:	80	80	80	80	80	80	80	80	81	°F

V_{strav} 17.96 ft/sec V_{scent} 20.85 ft/sec F_p 0.862

	Particulate Sampling Data														Fuel Weight (lb)		Temperature Data (°F)											Stack Gas Data		
Elapsed Time (min)	Gas Meter 1 (ft^3)	Gas Meter 2 (ft^3)	Sample Rate 1 (cfm)	Sample Rate 2 (cfm)	Orifice dH 1 ("H_2O)	Meter 1 Temp (°F)	Meter 1 Vacuum ("Hg)	Orifice dH 2 ("H_2O)	Meter 2 Temp (°F)	Meter 2 Vacuum ("Hg)	Dilution Tunnel (°F)	Dilution Tunnel Center dP	Pro. Rate 1	Pro. Rate 2	Scale Reading	Weight Change	Firebox Top	Firebox Bottom	Firebox Back	Firebox Left	Firebox Right	Avg. Stove Surface	Catalyst Exit	Stack	Filter 1	Dryer Exit 1	Filter 2	Dryer Exit 2	Ambient	Draft ("H_2O)	CO_2 (%)	CO (%)
108	17.322	17.273	0.16	0.16	1.27	81	3.21	1.10	81	2.3	86	0.100	99	100	4.5	-0.1	639	238	307	345	369	380	1049	364	72	51	72	51	69	-0.062	13.32	0.25
109	17.482	17.435	0.16	0.16	1.27	81	3.2	1.10	81	2.3	86	0.099	99	101	4.5	0	638	238	308	346	370	380	1048	362	72	51	72	51	69	-0.062	13.34	0.24
110	17.643	17.596	0.16	0.16	1.28	81	3.21	1.10	81	2.3	86	0.098	100	101	4.4	-0.1	637	238	309	346	371	380	1045	362	72	51	72	51	69	-0.061	13.2	0.24
111	17.804	17.756	0.16	0.16	1.27	81	3.21	1.10	81	2.3	86	0.096	101	101	4.4	0	636	238	310	347	371	380	1042	362	72	51	72	51	69	-0.062	13.06	0.24
112	17.965	17.918	0.16	0.16	1.27	81	3.19	1.10	81	2.3	86	0.099	100	101	4.3	-0.1	635	238	311	348	372	381	1038	361	72	51	72	51	69	-0.062	12.91	0.23
113	18.126	18.078	0.16	0.16	1.27	81	3.19	1.10	81	2.3	86	0.101	99	98	4.3	0	633	238	312	349	372	381	1035	360	72	51	72	51	69	-0.062	12.74	0.23
114	18.286	18.239	0.16	0.16	1.28	81	3.2	1.10	81	2.3	86	0.099	99	100	4.2	-0.1	631	238	313	349	373	381	1031	359	72	51	72	51	69	-0.062	12.65	0.22
115	18.447	18.400	0.16	0.16	1.28	81	3.21	1.10	81	2.3	86	0.099	100	100	4.2	0	630	238	314	350	373	381	1028	358	72	51	72	51	69	-0.061	12.54	0.22
116	18.608	18.561	0.16	0.16	1.28	81	3.19	1.09	81	2.3	86	0.098	100	101	4.1	-0.1	628	238	315	351	374	381	1026	358	72	51	72	51	69	-0.061	12.68	0.22
117	18.770	18.722	0.16	0.16	1.28	81	3.2	1.10	81	2.3	86	0.100	100	100	4.0	-0.1	626	238	315	351	374	381	1024	356	72	51	72	51	69	-0.061	12.55	0.22
118	18.930	18.883	0.16	0.16	1.28	81	3.22	1.10	81	2.3	86	0.098	100	101	4.0	0	622	238	316	352	375	381	988	359	72	51	72	51	69	-0.061	13.22	0.13
119	19.091	19.045	0.16	0.16	1.27	81	3.19	1.10	81	2.3	86	0.097	101	102	4.0	0	613	238	317	353	376	379	932	353	72	51	72	51	69	-0.058	13.54	0.09
120	19.252	19.205	0.16	0.16	1.28	81	3.2	1.10	81	2.3	85	0.099	100	99	3.9	-0.1	604	238	318	353	376	378	909	350	72	51	72	51	69	-0.058	13.69	0.09
121	19.412	19.366	0.16	0.16	1.27	81	3.2	1.10	81	2.3	85	0.100	99	99	3.8	-0.1	595	238	319	354	377	377	901	347	72	51	72	51	69	-0.062	13.68	0.09
122	19.573	19.527	0.16	0.16	1.28	81	3.2	1.10	81	2.3	85	0.097	101	101	3.8	0	587	238	320	355	378	376	896	342	72	51	72	51	69	-0.057	13.68	0.09
123	19.735	19.689	0.16	0.16	1.27	81	3.19	1.09	81	2.3	85	0.099	100	101	3.7	-0.1	581	238	321	356	378	375	895	339	72	51	72	51	69	-0.057	13.67	0.09
124	19.896	19.849	0.16	0.16	1.28	81	3.2	1.10	81	2.3	85	0.099	100	99	3.7	0	576	238	322	358	379	375	893	337	72	51	72	51	69	-0.057	13.43	0.08
125	20.056	20.010	0.16	0.16	1.28	81	3.19	1.10	81	2.3	85	0.098	100	100	3.6	-0.1	571	239	322	359	380	374	890	334	72	51	72	51	69	-0.057	13.41	0.09
126	20.217	20.172	0.16	0.16	1.28	81	3.21	1.10	81	2.3	85	0.098	100	101	3.6	0	567	239	323	360	380	374	889	331	72	51	72	51	69	-0.057	13.26	0.09
127	20.378	20.333	0.16	0.16	1.28	81	3.19	1.10	81	2.3	84	0.100	99	99	3.6	0	562	239	324	362	381	374	867	327	72	51	72	51	69	-0.056	13.3	0.06
128	20.539	20.493	0.16	0.16	1.28	81	3.19	1.10	81	2.3	84	0.100	99	99	3.5	-0.1	556	239	324	363	381	373	855	323	72	51	72	51	69	-0.056	13.28	0.07
129	20.701	20.655	0.16	0.16	1.28	81	3.2	1.10	81	2.3	84	0.099	100	100	3.5	0	551	239	325	364	382	372	842	321	72	51	72	51	69	-0.056	13.71	0.06
130	20.862	20.816	0.16	0.16	1.27	81	3.21	1.10	81	2.3	84	0.099	100	100	3.4	-0.1	547	239	325	366	382	372	836	318	72	51	72	51	69	-0.055	13.87	0.07
131	21.022	20.977	0.16	0.16	1.28	81	3.21	1.10	81	2.3	84	0.101	98	99	3.4	0	544	240	326	367	383	372	836	316	72	51	72	51	69	-0.055	13.87	0.06
132	21.183	21.138	0.16	0.16	1.28	81	3.21	1.10	81	2.3	84	0.098	100	100	3.3	-0.1	542	240	326	368	383	372	838	315	72	51	72	51	69	-0.055	14.06	0.07
133	21.343	21.300	0.16	0.16	1.28	81	3.2	1.10	81	2.3	84	0.099	99	100	3.3	0	540	240	326	369	384	372	839	313	72	51	72	51	69	-0.055	14.24	0.06
134	21.505	21.460	0.16	0.16	1.27	81	3.2	1.10	81	2.3	84	0.100	100	99	3.2	-0.1	539	240	326	370	384	372	840	312	72	51	72	51	69	-0.055	14.21	0.05
135	21.666	21.621	0.16	0.16	1.28	81	3.21	1.10	81	2.3	84	0.098	100	100	3.2	0	538	240	327	371	385	372	844	311	72	51	72	51	69	-0.054	14.04	0.06
136	21.827	21.782	0.16	0.16	1.27	81	3.19	1.10	81	2.3	84	0.099	100	100	3.1	-0.1	538	240	327	372	385	372	842	310	72	51	72	51	69	-0.054	13.86	0.05
137	21.987	21.944	0.16	0.16	1.28	81	3.2	1.10	81	2.3	84	0.099	99	100	3.1	0	537	240	327	373	386	373	837	307	72	51	72	51	69	-0.054	13.34	0.06
138	22.148	22.104	0.16	0.16	1.28	81	3.19	1.10	81	2.3	84	0.098	100	100	3.0	-0.1	536	240	327	374	386	373	832	305	72	51	72	51	69	-0.054	12.85	0.06
139	22.309	22.265	0.16	0.16	1.28	81	3.19	1.10	81	2.3	84	0.098	100	100	3.0	0	535	240	327	375	387	373	838	304	72	51	72	51	69	-0.054	12.43	0.08
140	22.471	22.427	0.16	0.16	1.28	81	3.2	1.10	81	2.3	84	0.097	101	101	3.0	0	533	240	327	375	387	372	837	303	72	51	72	51	69	-0.053	12.23	0.08
141	22.632	22.588	0.16	0.16	1.27	81	3.2	1.10	82	2.3	84	0.098	100	100	2.9	-0.1	531	240	327	376	388	372	833	301	72	51	72	51	69	-0.052	12.09	0.08
142	22.792	22.748	0.16	0.16	1.28	81	3.2	1.10	82	2.3	84	0.098	100	100	2.9	0	527	240	327	376	388	372	824	300	72	51	72	51	69	-0.052	11.87	0.08
143	22.953	22.910	0.16	0.16	1.28	81	3.21	1.10	82	2.3	83	0.099	100	100	2.9	0	523	241	327	377	388	371	812	297	72	51	72	51	69	-0.052	12.17	0.08

Wood Heater Test Data

u

Run: 3

Manufacturer: Kuma
Model: K-181
Tracking No.: 2461
Project No.: 0123WM013E
Test Date: 14-Dec-22
Beginning Clock Time: 12:29

Total Sampling Time: 305 min
Recording Interval: 1 min
Background Sample Volume: 62.944 cubic feet

Meter Box Y Factor: 1.004 (1) 1.002 (2) 1.016 (Amb)

Barometric Pressure:	Begin	Middle	End	Average	
	30.39	30.37	30.4	30.39	0

OMNI Equipment Numbers:

PM Control Modules: 335, 00336
Dilution Tunnel MW(dry): 29.00 lb/lb-mole
Dilution Tunnel MW(wet): 28.78 lb/lb-mole
Dilution Tunnel H2O: 2.00 percent
Dilution Tunnel Static: -0.300 "H2O
Tunnel Area: 0.19625 ft2
Pitot Tube Cp: 0.99

Avg. Tunnel Velocity: 18.00 ft/sec.
Initial Tunnel Flow: 205.7 scfm
Average Tunnel Flow: 205.5 scfm
Post-Test Leak Check (1): 0.000 cfm @ 16 in. Hg
Post-Test Leak Check (2): 0.000 cfm @ 17 in. Hg
Average Test Piece Fuel Moisture: 21.13 Dry Basis %

Technician Signature:_____

Export to PDF

Velocity Traverse Data

	Pt.1	Pt.2	Pt.3	Pt.4	Pt.5	Pt.6	Pt.7	Pt.8	Center	
Initial dP	0.066	0.086	0.090	0.060	0.054	0.080	0.088	0.064	0.098	"H2O
Temp:	80	80	80	80	80	80	80	80	81	°F

V_{strav} 17.96 ft/sec V_{scent} 20.85 ft/sec F_p 0.862

	Particulate Sampling Data														Fuel Weight (lb)		Temperature Data (°F)											Stack Gas Data		
Elapsed Time (min)	Gas Meter 1 (ft^3)	Gas Meter 2 (ft^3)	Sample Rate 1 (cfm)	Sample Rate 2 (cfm)	Orifice dH 1 ("H_2O)	Meter 1 Temp (°F)	Meter 1 Vacuum ("Hg)	Orifice dH 2 ("H_2O)	Meter 2 Temp (°F)	Meter 2 Vacuum ("Hg)	Dilution Tunnel (°F)	Dilution Tunnel Center dP	Pro. Rate 1	Pro. Rate 2	Scale Reading	Weight Change	Firebox Top	Firebox Bottom	Firebox Back	Firebox Left	Firebox Right	Avg. Stove Surface	Catalyst Exit	Stack	Filter 1	Dryer Exit 1	Filter 2	Dryer Exit 2	Ambient	Draft ("H_2O)	CO_2 (%)	CO (%)
144	23.114	23.071	0.16	0.16	1.28	81	3.2	1.10	82	2.3	83	0.097	101	101	2.8	-0.1	518	241	327	377	389	370	803	295	72	51	72	51	69	-0.051	11.74	0.09
145	23.275	23.232	0.16	0.16	1.27	81	3.19	1.10	82	2.3	83	0.097	101	101	2.8	0	514	241	327	378	389	370	800	293	72	51	72	51	69	-0.051	11.52	0.1
146	23.437	23.393	0.16	0.16	1.28	81	3.21	1.10	82	2.3	83	0.098	101	100	2.8	0	510	241	327	378	389	369	799	291	72	51	72	51	69	-0.050	11.45	0.1
147	23.597	23.555	0.16	0.16	1.27	81	3.21	1.10	82	2.3	83	0.099	99	100	2.7	-0.1	506	241	327	379	389	368	798	289	72	51	72	51	69	-0.050	11.47	0.11
148	23.758	23.716	0.16	0.16	1.27	81	3.21	1.10	82	2.3	83	0.099	100	100	2.7	0	502	242	327	379	390	368	796	287	72	51	72	51	69	-0.050	11.33	0.11
149	23.919	23.877	0.16	0.16	1.28	81	3.2	1.10	82	2.3	83	0.098	100	100	2.7	0	499	242	327	380	390	368	795	286	72	51	72	51	69	-0.050	11.15	0.12
150	24.080	24.038	0.16	0.16	1.28	81	3.2	1.10	82	2.3	83	0.100	99	99	2.7	0	495	242	327	381	390	367	796	285	72	51	72	51	69	-0.050	11.1	0.12
151	24.242	24.200	0.16	0.16	1.28	81	3.2	1.10	82	2.3	83	0.099	100	100	2.6	-0.1	492	242	327	381	390	366	798	284	72	51	72	51	69	-0.049	11.04	0.12
152	24.403	24.360	0.16	0.16	1.27	81	3.19	1.10	82	2.3	83	0.100	99	98	2.6	0	489	242	327	381	390	366	799	283	72	51	72	51	69	-0.049	10.99	0.12
153	24.563	24.521	0.16	0.16	1.28	81	3.2	1.10	82	2.3	82	0.100	98	99	2.6	0	487	243	327	381	390	366	800	283	72	51	72	51	69	-0.049	10.93	0.13
154	24.724	24.683	0.16	0.16	1.28	81	3.2	1.10	82	2.3	82	0.101	99	99	2.6	0	484	243	327	382	390	365	799	283	72	51	72	51	69	-0.049	10.9	0.13
155	24.885	24.845	0.16	0.16	1.28	81	3.19	1.10	82	2.3	82	0.100	99	100	2.5	-0.1	482	243	327	382	389	365	798	282	72	51	72	51	69	-0.049	10.76	0.13
156	25.046	25.005	0.16	0.16	1.27	81	3.2	1.10	82	2.3	82	0.099	99	99	2.5	0	480	243	327	382	390	364	798	281	72	51	72	51	69	-0.050	10.69	0.13
157	25.208	25.166	0.16	0.16	1.28	81	3.21	1.10	82	2.3	82	0.098	101	100	2.5	0	478	244	328	382	389	364	797	280	72	51	71	51	69	-0.049	10.68	0.13
158	25.369	25.329	0.16	0.16	1.27	81	3.19	1.10	82	2.3	82	0.099	99	101	2.4	-0.1	476	244	328	382	389	364	797	280	72	51	71	51	69	-0.049	10.67	0.13
159	25.529	25.489	0.16	0.16	1.28	81	3.21	1.10	82	2.3	82	0.099	99	99	2.4	0	474	244	328	382	389	363	797	280	72	51	71	51	69	-0.049	10.69	0.13
160	25.690	25.650	0.16	0.16	1.28	81	3.2	1.10	82	2.3	82	0.099	99	99	2.4	0	473	244	328	382	388	363	798	279	72	51	71	51	69	-0.049	10.75	0.13
161	25.851	25.811	0.16	0.16	1.28	81	3.21	1.10	82	2.3	82	0.100	99	99	2.4	0	472	244	328	382	388	363	800	278	72	51	71	51	69	-0.049	10.87	0.14
162	26.013	25.973	0.16	0.16	1.28	81	3.21	1.10	82	2.3	82	0.099	100	100	2.3	-0.1	470	245	328	382	388	363	801	278	72	51	71	51	69	-0.049	11.06	0.13
163	26.174	26.134	0.16	0.16	1.28	81	3.2	1.10	82	2.3	82	0.099	99	99	2.3	0	469	245	328	382	387	362	799	278	72	51	71	51	69	-0.048	11.04	0.13
164	26.335	26.295	0.16	0.16	1.27	81	3.19	1.10	82	2.3	82	0.100	99	99	2.3	0	468	245	328	382	387	362	799	278	72	51	71	51	69	-0.049	10.99	0.13
165	26.496	26.457	0.16	0.16	1.28	81	3.21	1.10	82	2.3	82	0.100	99	100	2.3	0	467	245	328	382	386	362	800	278	72	51	71	51	69	-0.048	11.06	0.13
166	26.657	26.618	0.16	0.16	1.28	81	3.21	1.10	82	2.3	82	0.100	99	99	2.2	-0.1	467	245	328	381	386	361	804	279	72	51	71	51	69	-0.049	11.08	0.13
167	26.818	26.779	0.16	0.16	1.27	81	3.19	1.10	82	2.3	82	0.100	99	99	2.2	0	466	246	328	381	386	361	809	279	72	51	71	51	69	-0.049	11.14	0.13
168	26.979	26.939	0.16	0.16	1.28	81	3.21	1.10	82	2.3	82	0.099	99	99	2.2	0	466	246	328	381	385	361	806	278	72	51	71	51	69	-0.049	11.04	0.12
169	27.141	27.101	0.16	0.16	1.27	81	3.21	1.10	82	2.3	82	0.101	99	99	2.1	-0.1	466	246	328	381	385	361	808	279	72	51	71	51	69	-0.048	11.21	0.13
170	27.302	27.262	0.16	0.16	1.28	81	3.2	1.10	82	2.3	81	0.101	98	98	2.1	0	466	247	328	381	384	361	809	280	72	51	71	51	70	-0.049	11.1	0.13
171	27.462	27.423	0.16	0.16	1.28	81	3.19	1.10	82	2.3	82	0.101	98	98	2.1	0	466	247	328	381	384	361	812	280	72	51	71	51	70	-0.050	10.95	0.13
172	27.623	27.585	0.16	0.16	1.28	81	3.19	1.10	82	2.3	82	0.098	100	101	2.0	-0.1	466	247	328	380	383	361	816	281	72	51	71	51	69	-0.050	11.29	0.12
173	27.784	27.746	0.16	0.16	1.28	81	3.19	1.10	82	2.3	82	0.101	99	98	2.0	0	466	248	328	381	383	361	812	283	72	51	71	51	69	-0.051	11.04	0.11
174	27.946	27.907	0.16	0.16	1.28	81	3.19	1.10	82	2.3	82	0.102	99	98	2.0	0	467	248	329	380	382	361	811	283	72	51	71	51	69	-0.049	10.98	0.11
175	28.107	28.068	0.16	0.16	1.27	81	3.19	1.10	82	2.3	81	0.100	99	99	1.9	-0.1	467	248	329	380	382	361	820	282	72	51	71	51	69	-0.050	11.14	0.12
176	28.268	28.230	0.16	0.16	1.28	81	3.21	1.10	82	2.3	81	0.101	98	99	1.9	0	469	248	329	380	381	361	854	284	72	51	71	51	69	-0.050	11.31	0.18
177	28.428	28.391	0.16	0.16	1.28	81	3.19	1.10	82	2.3	81	0.100	98	99	1.9	0	474	248	329	380	381	362	880	286	72	51	71	51	69	-0.051	11.42	0.2
178	28.589	28.551	0.16	0.16	1.28	81	3.21	1.10	82	2.3	81	0.101	98	98	1.8	-0.1	478	248	330	380	380	363	870	291	71	51	71	51	70	-0.050	11.67	0.14
179	28.750	28.713	0.16	0.16	1.28	81	3.2	1.10	82	2.3	81	0.102	98	99	1.8	0	479	248	330	380	380	363	844	291	71	51	71	51	69	-0.052	11.02	0.11

Wood Heater Test Data

u

Run: 3

Manufacturer: Kuma
Model: K-181
Tracking No.: 2461
Project No.: 0123WM013E
Test Date: 14-Dec-22
Beginning Clock Time: 12:29

Total Sampling Time: 305 min
Recording Interval: 1 min
Background Sample Volume: 62.944 cubic feet

Meter Box Y Factor: 1.004 (1) 1.002 (2) 1.016 (Amb)

Barometric Pressure:	Begin	Middle	End	Average	
	30.39	30.37	30.4	30.39	0

OMNI Equipment Numbers:

PM Control Modules: 335, 00336
Dilution Tunnel MW(dry): 29.00 lb/lb-mole
Dilution Tunnel MW(wet): 28.78 lb/lb-mole
Dilution Tunnel H2O: 2.00 percent
Dilution Tunnel Static: -0.300 "H2O
Tunnel Area: 0.19625 ft2
Pitot Tube Cp: 0.99

Avg. Tunnel Velocity: 18.00 ft/sec.
Initial Tunnel Flow: 205.7 scfm
Average Tunnel Flow: 205.5 scfm
Post-Test Leak Check (1): 0.000 cfm @ 16 in. Hg
Post-Test Leak Check (2): 0.000 cfm @ 17 in. Hg
Average Test Piece Fuel Moisture: 21.13 Dry Basis %

Technician Signature:_____

Export to PDF

Velocity Traverse Data

	Pt.1	Pt.2	Pt.3	Pt.4	Pt.5	Pt.6	Pt.7	Pt.8	Center	
Initial dP	0.066	0.086	0.090	0.060	0.054	0.080	0.088	0.064	0.098	"H2O
Temp:	80	80	80	80	80	80	80	80	81	°F

V_{strav} 17.96 ft/sec V_{scent} 20.85 ft/sec F_p 0.862

	Particulate Sampling Data														Fuel Weight (lb)		Temperature Data (°F)												Stack Gas Data		
Elapsed Time (min)	Gas Meter 1 (ft^3)	Gas Meter 2 (ft^3)	Sample Rate 1 (cfm)	Sample Rate 2 (cfm)	Orifice dH 1 ("H_2O)	Meter 1 Temp (°F)	Meter 1 Vacuum ("Hg)	Orifice dH 2 ("H_2O)	Meter 2 Temp (°F)	Meter 2 Vacuum ("Hg)	Dilution Tunnel (°F)	Dilution Tunnel Center dP	Pro. Rate 1	Pro. Rate 2	Scale Reading	Weight Change	Firebox Top	Firebox Bottom	Firebox Back	Firebox Left	Firebox Right	Avg. Stove Surface	Catalyst Exit	Stack	Filter 1	Dryer Exit 1	Filter 2	Dryer Exit 2	Ambient	Draft ("H_2O)	CO_2 (%)	CO (%)
180	28.912	28.875	0.16	0.16	1.28	81	3.19	1.10	82	2.3	81	0.101	99	99	1.8	0	478	249	330	380	379	363	836	291	71	51	71	51	69	-0.061	11.1	0.11
181	29.073	29.035	0.16	0.16	1.28	81	3.2	1.10	82	2.3	81	0.103	97	97	1.7	-0.1	478	249	331	380	378	363	826	290	71	51	71	51	69	-0.051	10.89	0.12
182	29.234	29.196	0.16	0.16	1.28	81	3.21	1.10	82	2.3	81	0.102	98	98	1.7	0	477	249	331	379	378	363	824	291	71	51	71	51	69	-0.052	10.51	0.11
183	29.395	29.358	0.16	0.16	1.28	81	3.19	1.10	82	2.3	80	0.102	98	98	1.7	0	477	249	332	379	377	363	834	288	71	51	71	51	70	-0.051	10.3	0.14
184	29.556	29.519	0.16	0.16	1.28	81	3.2	1.09	82	2.3	80	0.103	97	97	1.7	0	478	250	332	379	377	363	855	288	71	51	71	51	69	-0.051	10.31	0.18
185	29.717	29.680	0.16	0.16	1.28	81	3.21	1.10	82	2.3	79	0.103	97	97	1.6	-0.1	480	250	333	379	376	364	860	289	71	51	71	51	69	-0.052	9.97	0.18
186	29.879	29.841	0.16	0.16	1.27	81	3.2	1.10	82	2.3	79	0.103	98	97	1.6	0	480	250	333	378	375	363	850	288	71	51	71	51	69	-0.051	9.58	0.15
187	30.040	30.003	0.16	0.16	1.28	81	3.19	1.10	82	2.3	79	0.104	97	97	1.6	0	480	250	333	378	374	363	836	287	71	51	71	51	69	-0.051	9.38	0.15
188	30.200	30.164	0.16	0.16	1.27	81	3.21	1.10	82	2.3	79	0.103	97	97	1.6	0	478	250	334	378	373	363	825	287	71	51	71	51	69	-0.051	9.09	0.15
189	30.361	30.325	0.16	0.16	1.28	81	3.19	1.10	82	2.3	78	0.102	98	98	1.5	-0.1	476	250	334	377	373	362	811	285	71	51	71	51	69	-0.051	8.71	0.15
190	30.522	30.486	0.16	0.16	1.28	81	3.2	1.10	82	2.3	78	0.103	97	97	1.5	0	472	250	334	376	372	361	797	283	71	51	71	51	69	-0.050	8.38	0.14
191	30.683	30.648	0.16	0.16	1.28	81	3.19	1.10	82	2.3	78	0.103	97	98	1.5	0	468	250	334	376	371	360	782	280	71	51	71	51	69	-0.050	8.1	0.14
192	30.845	30.809	0.16	0.16	1.28	81	3.21	1.10	82	2.3	78	0.102	98	98	1.5	0	464	250	334	375	370	359	765	278	71	51	71	51	69	-0.049	8.03	0.12
193	31.006	30.970	0.16	0.16	1.28	81	3.21	1.10	82	2.3	77	0.104	97	97	1.5	0	458	250	334	375	369	357	750	275	71	51	71	51	69	-0.049	7.8	0.12
194	31.167	31.132	0.16	0.16	1.27	81	3.19	1.10	82	2.3	77	0.103	97	98	1.5	0	453	250	334	374	368	356	738	272	71	51	71	51	69	-0.049	7.64	0.12
195	31.328	31.293	0.16	0.16	1.28	81	3.21	1.10	82	2.3	78	0.104	97	97	1.5	0	447	249	334	373	367	354	728	269	71	51	70	51	69	-0.048	7.54	0.12
196	31.489	31.454	0.16	0.16	1.28	81	3.2	1.10	82	2.3	77	0.103	97	97	1.4	-0.1	442	250	334	372	366	353	718	266	71	51	70	51	69	-0.048	7.44	0.12
197	31.650	31.615	0.16	0.16	1.28	81	3.21	1.10	82	2.3	77	0.103	97	97	1.4	0	436	250	334	371	365	351	710	264	71	51	70	51	69	-0.048	7.34	0.12
198	31.812	31.777	0.16	0.16	1.28	81	3.19	1.10	82	2.3	77	0.100	99	99	1.4	0	431	250	335	370	364	350	702	261	71	51	70	51	69	-0.047	7.26	0.12
199	31.974	31.937	0.16	0.16	1.28	81	3.2	1.10	82	2.3	78	0.102	98	97	1.4	0	426	250	335	369	363	349	696	259	70	51	70	51	69	-0.046	7.21	0.12
200	32.134	32.099	0.16	0.16	1.27	81	3.2	1.10	82	2.3	78	0.100	98	99	1.4	0	421	250	335	369	362	347	690	256	70	51	70	51	69	-0.046	7.2	0.12
201	32.295	32.260	0.16	0.16	1.28	81	3.2	1.10	82	2.3	77	0.097	100	100	1.4	0	416	250	335	368	361	346	685	254	70	51	70	51	69	-0.046	7.1	0.11
202	32.456	32.422	0.16	0.16	1.28	81	3.19	1.10	82	2.3	76	0.099	99	100	1.4	0	412	250	335	367	360	345	681	253	70	51	70	51	68	-0.046	7.07	0.11
203	32.618	32.583	0.16	0.16	1.29	81	3.2	1.10	81	2.3	76	0.100	99	99	1.3	-0.1	407	250	335	366	358	343	677	251	70	51	70	51	69	-0.046	7.04	0.11
204	32.780	32.744	0.16	0.16	1.28	81	3.19	1.10	81	2.3	76	0.100	99	99	1.3	0	403	250	335	365	357	342	674	250	70	51	70	51	69	-0.046	7.01	0.11
205	32.941	32.906	0.16	0.16	1.28	81	3.2	1.10	81	2.3	76	0.102	97	98	1.3	0	399	250	335	364	356	341	670	248	70	51	70	51	69	-0.045	6.97	0.12
206	33.101	33.067	0.16	0.16	1.28	81	3.19	1.10	81	2.3	76	0.099	98	99	1.3	0	396	250	335	363	355	340	667	246	70	51	70	51	69	-0.045	6.91	0.11
207	33.263	33.228	0.16	0.16	1.28	81	3.21	1.10	81	2.3	75	0.097	100	100	1.3	0	392	250	335	362	354	339	664	245	70	51	70	51	69	-0.044	6.84	0.12
208	33.424	33.389	0.16	0.16	1.28	81	3.19	1.10	81	2.3	76	0.100	98	99	1.3	0	389	250	335	361	352	337	661	243	70	51	70	51	69	-0.045	6.77	0.12
209	33.585	33.551	0.16	0.16	1.29	81	3.19	1.10	81	2.3	76	0.100	98	99	1.3	0	386	250	335	360	351	336	657	241	70	51	70	51	69	-0.044	6.68	0.12
210	33.747	33.712	0.16	0.16	1.28	81	3.19	1.10	81	2.3	76	0.100	99	99	1.3	0	383	250	334	359	350	335	653	240	70	51	70	51	69	-0.044	6.62	0.12
211	33.908	33.873	0.16	0.16	1.29	81	3.21	1.10	81	2.3	76	0.100	98	99	1.3	0	380	250	334	358	348	334	650	238	70	51	70	51	69	-0.044	6.49	0.12
212	34.069	34.035	0.16	0.16	1.28	81	3.21	1.10	81	2.3	76	0.098	99	100	1.3	0	377	249	334	357	347	333	647	237	70	51	70	51	68	-0.043	6.42	0.12
213	34.230	34.197	0.16	0.16	1.28	81	3.19	1.10	81	2.3	77	0.099	99	100	1.3	0	374	250	334	356	346	332	640	236	70	51	70	51	69	-0.043	6.23	0.11
214	34.391	34.358	0.16	0.16	1.28	81	3.2	1.10	81	2.3	76	0.098	99	100	1.2	-0.1	371	250	334	355	345	331	634	234	70	51	69	51	69	-0.042	6.09	0.11
215	34.553	34.519	0.16	0.16	1.28	81	3.2	1.10	81	2.3	77	0.100	99	99	1.2	0	368	249	334	354	343	330	630	233	70	51	69	51	69	-0.042	6.1	0.11

Wood Heater Test Data

u

Run: 3

Manufacturer: Kuma
Model: K-181
Tracking No.: 2461
Project No.: 0123WM013E
Test Date: 14-Dec-22
Beginning Clock Time: 12:29

Total Sampling Time: 305 min
Recording Interval: 1 min
Background Sample Volume: 62.944 cubic feet

Meter Box Y Factor: 1.004 (1) 1.002 (2) 1.016 (Amb)

Barometric Pressure:	Begin	Middle	End	Average	
	30.39	30.37	30.4	30.39	0

OMNI Equipment Numbers:

PM Control Modules: 335, 00336
Dilution Tunnel MW(dry): 29.00 lb/lb-mole
Dilution Tunnel MW(wet): 28.78 lb/lb-mole
Dilution Tunnel H2O: 2.00 percent
Dilution Tunnel Static: -0.300 "H2O
Tunnel Area: 0.19625 ft2
Pitot Tube Cp: 0.99

Avg. Tunnel Velocity: 18.00 ft/sec.
Initial Tunnel Flow: 205.7 scfm
Average Tunnel Flow: 205.5 scfm
Post-Test Leak Check (1): 0.000 cfm @ 16 in. Hg
Post-Test Leak Check (2): 0.000 cfm @ 17 in. Hg
Average Test Piece Fuel Moisture: 21.13 Dry Basis %

Technician Signature:_____

Export to PDF

Velocity Traverse Data

	Pt.1	Pt.2	Pt.3	Pt.4	Pt.5	Pt.6	Pt.7	Pt.8	Center	
Initial dP	0.066	0.086	0.090	0.060	0.054	0.080	0.088	0.064	0.098	"H2O
Temp:	80	80	80	80	80	80	80	80	81	°F

V_{strav} 17.96 ft/sec V_{scent} 20.85 ft/sec F_p 0.862

	Particulate Sampling Data														Fuel Weight (lb)		Temperature Data (°F)												Stack Gas Data		
Elapsed Time (min)	Gas Meter 1 (ft^3)	Gas Meter 2 (ft^3)	Sample Rate 1 (cfm)	Sample Rate 2 (cfm)	Orifice dH 1 ("H_2O)	Meter 1 Temp (°F)	Meter 1 Vacuum ("Hg)	Orifice dH 2 ("H_2O)	Meter 2 Temp (°F)	Meter 2 Vacuum ("Hg)	Dilution Tunnel (°F)	Dilution Tunnel Center dP	Pro. Rate 1	Pro. Rate 2	Scale Reading	Weight Change	Firebox Top	Firebox Bottom	Firebox Back	Firebox Left	Firebox Right	Avg. Stove Surface	Catalyst Exit	Stack	Filter 1	Dryer Exit 1	Filter 2	Dryer Exit 2	Ambient	Draft ("H_2O)	CO_2 (%)	CO (%)
216	34.715	34.681	0.16	0.16	1.28	81	3.2	1.10	81	2.3	76	0.099	100	100	1.2	0	365	249	333	353	342	328	627	231	70	51	69	51	68	-0.042	6.1	0.11
217	34.876	34.842	0.16	0.16	1.28	81	3.2	1.10	81	2.3	77	0.099	99	99	1.2	0	362	249	333	351	341	327	626	231	70	51	69	51	68	-0.042	6.09	0.11
218	35.037	35.002	0.16	0.16	1.28	81	3.2	1.10	81	2.3	77	0.097	100	100	1.2	0	360	249	333	350	340	326	624	230	70	51	69	51	68	-0.041	6.05	0.11
219	35.198	35.164	0.16	0.16	1.28	81	3.2	1.10	81	2.3	76	0.097	100	101	1.2	0	357	249	332	349	338	325	623	228	70	51	69	51	68	-0.042	6.05	0.12
220	35.359	35.326	0.16	0.16	1.28	81	3.2	1.10	81	2.3	77	0.099	99	100	1.2	0	355	248	332	348	337	324	621	228	70	51	69	51	68	-0.041	5.98	0.12
221	35.520	35.487	0.16	0.16	1.28	81	3.19	1.10	81	2.3	77	0.097	100	100	1.2	0	353	248	331	347	336	323	618	226	70	51	69	51	68	-0.041	5.94	0.12
222	35.682	35.648	0.16	0.16	1.27	81	3.2	1.10	81	2.3	77	0.097	101	100	1.2	0	350	248	331	346	334	322	616	226	70	51	69	51	68	-0.041	5.94	0.12
223	35.843	35.810	0.16	0.16	1.28	81	3.21	1.10	81	2.3	77	0.099	99	100	1.2	0	348	248	330	344	333	321	614	225	70	51	69	51	68	-0.041	6.05	0.12
224	36.005	35.971	0.16	0.16	1.28	80	3.21	1.10	81	2.3	77	0.098	100	100	1.2	0	346	248	330	343	332	320	614	224	70	51	69	51	68	-0.041	6.27	0.12
225	36.165	36.132	0.16	0.16	1.28	80	3.19	1.10	81	2.3	77	0.099	99	99	1.2	0	344	247	330	342	331	319	612	223	70	51	69	51	69	-0.041	6.21	0.12
226	36.326	36.294	0.16	0.16	1.29	80	3.2	1.10	81	2.3	77	0.098	100	100	1.1	-0.1	343	247	329	341	329	318	611	222	70	51	69	51	68	-0.040	6.21	0.12
227	36.488	36.456	0.16	0.16	1.28	80	3.2	1.10	81	2.3	98	0.094	104	104	1.1	0	340	250	329	339	328	317	514	278	70	51	70	51	69	-0.056	4.44	0.18
228	36.650	36.617	0.16	0.16	1.28	80	3.2	1.10	81	2.3	81	0.098	101	100	1.1	0	333	249	328	338	327	315	430	242	70	51	70	51	69	-0.039	5.15	1.99
229	36.811	36.778	0.16	0.16	1.29	80	3.21	1.10	81	2.3	78	0.098	100	100	1.1	0	329	248	328	337	326	314	490	227	70	51	70	51	68	-0.039	8.47	0.51
230	36.972	36.939	0.16	0.16	1.28	80	3.19	1.10	81	2.3	77	0.099	99	99	1.1	0	327	247	328	336	325	313	550	222	70	51	70	51	68	-0.039	9	0.09
231	37.133	37.101	0.16	0.16	1.28	80	3.21	1.10	81	2.3	77	0.099	99	100	1.0	-0.1	326	247	327	334	324	312	579	220	70	51	70	51	69	-0.039	9.04	0.09
232	37.294	37.262	0.16	0.16	1.29	80	3.19	1.10	81	2.3	77	0.097	100	100	1.0	0	326	247	326	333	323	311	590	219	70	51	70	51	68	-0.039	8.84	0.08
233	37.455	37.423	0.16	0.16	1.29	80	3.19	1.10	81	2.3	77	0.099	99	99	1.0	0	326	247	326	332	322	311	595	217	70	51	70	51	68	-0.039	8.65	0.08
234	37.617	37.585	0.16	0.16	1.28	80	3.21	1.10	81	2.3	77	0.098	100	100	1.0	0	326	247	325	331	322	310	599	217	70	51	70	51	68	-0.039	8.47	0.09
235	37.778	37.747	0.16	0.16	1.28	80	3.19	1.10	81	2.3	77	0.097	100	101	1.0	0	326	247	325	330	321	310	599	216	70	51	70	51	69	-0.039	8.46	0.09
236	37.939	37.908	0.16	0.16	1.28	80	3.19	1.10	81	2.3	77	0.098	100	100	1.0	0	326	247	324	329	321	309	600	216	70	51	70	51	69	-0.039	8.43	0.09
237	38.100	38.069	0.16	0.16	1.28	80	3.19	1.10	81	2.3	77	0.098	100	100	1.0	0	326	247	323	329	320	309	600	215	70	51	70	51	69	-0.038	8.39	0.09
238	38.261	38.231	0.16	0.16	1.29	80	3.19	1.10	81	2.3	77	0.099	99	100	0.9	-0.1	327	246	322	328	320	309	601	215	70	51	70	51	69	-0.038	8.34	0.09
239	38.422	38.392	0.16	0.16	1.28	80	3.19	1.10	81	2.3	77	0.098	100	100	0.9	0	327	247	322	327	320	309	602	215	70	51	70	51	69	-0.039	8.35	0.09
240	38.584	38.553	0.16	0.16	1.27	80	3.19	1.10	81	2.3	77	0.098	100	100	0.9	0	328	246	321	326	319	308	603	215	70	51	70	51	69	-0.038	8.41	0.1
241	38.746	38.714	0.16	0.16	1.28	80	3.21	1.10	81	2.3	77	0.100	99	99	0.9	0	328	246	320	326	319	308	605	215	70	51	70	51	68	-0.038	8.44	0.1
242	38.907	38.876	0.16	0.16	1.28	80	3.21	1.10	81	2.3	77	0.100	99	99	0.9	0	328	246	319	325	319	307	608	215	70	51	70	51	69	-0.038	8.53	0.1
243	39.068	39.036	0.16	0.16	1.29	80	3.2	1.10	81	2.3	77	0.101	98	98	0.9	0	329	246	319	324	319	307	611	215	70	51	70	51	69	-0.038	8.56	0.1
244	39.228	39.198	0.16	0.16	1.29	80	3.19	1.11	81	2.3	77	0.098	99	100	0.9	0	330	246	318	324	319	307	613	215	70	51	70	51	69	-0.038	8.6	0.1
245	39.390	39.359	0.16	0.16	1.28	80	3.21	1.10	81	2.3	77	0.100	99	99	0.9	0	330	246	317	323	318	307	614	215	70	51	70	51	68	-0.038	8.62	0.1
246	39.552	39.521	0.16	0.16	1.28	80	3.19	1.10	81	2.3	77	0.100	99	99	0.9	0	331	246	316	323	318	307	615	216	70	51	70	51	68	-0.038	8.57	0.1
247	39.713	39.682	0.16	0.16	1.29	80	3.2	1.10	81	2.3	77	0.098	100	100	0.8	-0.1	331	246	315	322	318	306	614	215	70	51	70	51	69	-0.038	8.61	0.1
248	39.875	39.843	0.16	0.16	1.27	80	3.2	1.10	81	2.3	77	0.098	100	100	0.8	0	332	246	314	322	318	306	615	216	70	51	70	51	69	-0.038	8.61	0.09
249	40.035	40.005	0.16	0.16	1.29	80	3.19	1.10	81	2.3	77	0.099	99	100	0.8	0	332	246	314	322	318	306	614	215	70	51	70	51	68	-0.038	8.43	0.09
250	40.196	40.166	0.16	0.16	1.29	80	3.2	1.10	81	2.3	77	0.099	99	99	0.8	0	332	246	313	322	318	306	616	215	70	51	70	51	68	-0.038	8.47	0.1
251	40.358	40.327	0.16	0.16	1.29	80	3.19	1.10	81	2.3	77	0.099	100	99	0.8	0	333	245	312	321	317	306	618	215	70	51	70	51	68	-0.038	8.58	0.1

Wood Heater Test Data

u

Run: 3

Manufacturer: Kuma
Model: K-181
Tracking No.: 2461
Project No.: 0123WM013E
Test Date: 14-Dec-22
Beginning Clock Time: 12:29

Total Sampling Time: 305 min
Recording Interval: 1 min
Background Sample Volume: 62.944 cubic feet

Meter Box Y Factor: 1.004 (1) 1.002 (2) 1.016 (Amb)

Barometric Pressure:	Begin	Middle	End	Average	
	30.39	30.37	30.4	30.39	0

OMNI Equipment Numbers:

PM Control Modules: 335, 00336
Dilution Tunnel MW(dry): 29.00 lb/lb-mole
Dilution Tunnel MW(wet): 28.78 lb/lb-mole
Dilution Tunnel H2O: 2.00 percent
Dilution Tunnel Static: -0.300 "H2O
Tunnel Area: 0.19625 ft2
Pitot Tube Cp: 0.99

Avg. Tunnel Velocity: 18.00 ft/sec.
Initial Tunnel Flow: 205.7 scfm
Average Tunnel Flow: 205.5 scfm
Post-Test Leak Check (1): 0.000 cfm @ 16 in. Hg
Post-Test Leak Check (2): 0.000 cfm @ 17 in. Hg
Average Test Piece Fuel Moisture: 21.13 Dry Basis %

Technician Signature:_____

Export to PDF

Velocity Traverse Data

	Pt.1	Pt.2	Pt.3	Pt.4	Pt.5	Pt.6	Pt.7	Pt.8	Center	
Initial dP	0.066	0.086	0.090	0.060	0.054	0.080	0.088	0.064	0.098	"H2O
Temp:	80	80	80	80	80	80	80	80	81	°F

V_{strav} 17.96 ft/sec V_{scent} 20.85 ft/sec F_p 0.862

	Particulate Sampling Data														Fuel Weight (lb)		Temperature Data (°F)												Stack Gas Data		
Elapsed Time (min)	Gas Meter 1 (ft^3)	Gas Meter 2 (ft^3)	Sample Rate 1 (cfm)	Sample Rate 2 (cfm)	Orifice dH 1 ("H_2O)	Meter 1 Temp (°F)	Meter 1 Vacuum ("Hg)	Orifice dH 2 ("H_2O)	Meter 2 Temp (°F)	Meter 2 Vacuum ("Hg)	Dilution Tunnel (°F)	Dilution Tunnel Center dP	Pro. Rate 1	Pro. Rate 2	Scale Reading	Weight Change	Firebox Top	Firebox Bottom	Firebox Back	Firebox Left	Firebox Right	Avg. Stove Surface	Catalyst Exit	Stack	Filter 1	Dryer Exit 1	Filter 2	Dryer Exit 2	Ambient	Draft ("H_2O)	CO_2 (%)	CO (%)
252	40.519	40.488	0.16	0.16	1.28	80	3.2	1.10	81	2.3	77	0.098	100	100	0.8	0	333	246	311	321	317	306	619	216	70	51	70	51	69	-0.038	8.39	0.1
253	40.681	40.650	0.16	0.16	1.29	80	3.2	1.10	81	2.3	77	0.099	100	100	0.8	0	333	245	311	321	317	305	622	216	70	51	70	51	68	-0.038	8.38	0.11
254	40.843	40.811	0.16	0.16	1.28	80	3.2	1.10	81	2.3	77	0.099	100	99	0.8	0	334	246	310	321	317	306	622	215	70	51	70	51	69	-0.038	8.41	0.1
255	41.003	40.972	0.16	0.16	1.28	80	3.2	1.10	81	2.3	77	0.100	98	99	0.7	-0.1	334	245	310	321	317	305	619	216	70	51	70	51	69	-0.038	8.39	0.1
256	41.164	41.134	0.16	0.16	1.28	80	3.19	1.10	81	2.3	77	0.099	99	100	0.7	0	334	246	309	321	317	305	619	216	70	51	70	51	69	-0.038	8.38	0.1
257	41.326	41.295	0.16	0.16	1.29	80	3.19	1.10	81	2.3	77	0.098	100	100	0.7	0	335	246	309	321	317	306	620	216	70	51	70	51	68	-0.038	8.47	0.1
258	41.487	41.456	0.16	0.16	1.29	80	3.2	1.10	81	2.3	77	0.098	100	100	0.7	0	335	246	308	321	317	305	620	216	70	51	70	51	69	-0.038	8.53	0.1
259	41.649	41.617	0.16	0.16	1.29	80	3.2	1.10	81	2.3	77	0.101	99	98	0.7	0	335	245	308	320	316	305	620	216	70	51	70	51	68	-0.038	8.57	0.1
260	41.810	41.780	0.16	0.16	1.28	80	3.21	1.10	81	2.3	77	0.099	99	100	0.7	0	335	245	307	320	316	305	619	216	70	51	70	51	69	-0.037	8.67	0.1
261	41.971	41.941	0.16	0.16	1.28	80	3.19	1.10	81	2.3	77	0.101	98	98	0.7	0	335	245	307	320	316	305	618	216	70	51	70	51	69	-0.038	8.77	0.1
262	42.132	42.101	0.16	0.16	1.28	80	3.19	1.10	81	2.3	77	0.100	99	98	0.6	-0.1	335	245	306	320	316	304	617	216	70	51	70	51	69	-0.038	8.79	0.1
263	42.293	42.263	0.16	0.16	1.29	80	3.21	1.10	81	2.3	77	0.099	99	100	0.6	0	335	245	306	320	316	304	615	216	70	51	70	51	69	-0.037	8.88	0.09
264	42.455	42.425	0.16	0.16	1.28	80	3.2	1.10	81	2.3	77	0.097	101	101	0.6	0	334	245	306	320	316	304	614	215	70	51	70	51	69	-0.038	8.98	0.09
265	42.617	42.585	0.16	0.16	1.28	80	3.19	1.10	81	2.3	77	0.101	99	98	0.6	0	334	245	306	320	316	304	613	215	70	51	70	51	69	-0.037	8.99	0.09
266	42.778	42.747	0.16	0.16	1.28	80	3.21	1.11	81	2.3	77	0.099	99	100	0.6	0	334	245	306	321	316	304	612	215	70	51	70	51	69	-0.037	9.01	0.09
267	42.939	42.908	0.16	0.16	1.28	80	3.2	1.10	81	2.3	77	0.099	99	99	0.6	0	334	245	305	321	316	304	611	215	70	51	70	51	69	-0.037	9.09	0.09
268	43.100	43.070	0.16	0.16	1.28	80	3.2	1.10	81	2.3	77	0.099	99	100	0.6	0	334	245	305	321	315	304	613	214	70	51	70	51	68	-0.038	9.01	0.09
269	43.261	43.231	0.16	0.16	1.29	80	3.21	1.10	81	2.3	77	0.097	100	100	0.5	-0.1	334	245	305	321	315	304	614	214	70	51	70	51	68	-0.037	8.99	0.09
270	43.422	43.392	0.16	0.16	1.28	80	3.19	1.10	81	2.3	77	0.098	100	100	0.5	0	334	245	305	322	315	304	614	214	70	51	70	51	68	-0.037	8.93	0.1
271	43.585	43.554	0.16	0.16	1.28	80	3.19	1.10	81	2.3	77	0.099	100	100	0.5	0	334	245	305	322	315	304	615	215	70	51	70	51	69	-0.037	8.88	0.1
272	43.746	43.715	0.16	0.16	1.28	80	3.2	1.10	81	2.3	77	0.100	99	99	0.5	0	335	245	305	322	315	304	616	215	70	51	70	51	69	-0.037	8.86	0.09
273	43.907	43.876	0.16	0.16	1.28	80	3.19	1.10	81	2.3	77	0.098	100	100	0.5	0	335	245	305	323	315	305	615	215	70	51	70	51	69	-0.038	8.92	0.1
274	44.068	44.037	0.16	0.16	1.28	80	3.2	1.10	81	2.3	77	0.098	100	100	0.5	0	335	245	306	323	315	305	615	215	70	51	70	51	69	-0.037	9.01	0.1
275	44.229	44.199	0.16	0.16	1.29	80	3.19	1.10	81	2.3	77	0.099	99	100	0.5	0	335	245	306	324	315	305	613	215	70	51	70	51	69	-0.037	8.97	0.09
276	44.390	44.360	0.16	0.16	1.28	80	3.2	1.10	81	2.3	77	0.097	100	100	0.5	0	334	245	306	324	314	305	611	214	70	51	70	51	69	-0.037	8.88	0.09
277	44.552	44.521	0.16	0.16	1.29	80	3.2	1.10	81	2.3	77	0.100	99	99	0.4	-0.1	334	245	306	325	314	305	611	214	70	51	70	51	69	-0.037	8.93	0.09
278	44.714	44.683	0.16	0.16	1.29	80	3.19	1.10	81	2.3	77	0.099	100	100	0.4	0	334	245	306	325	314	305	613	214	70	51	70	51	69	-0.037	8.83	0.1
279	44.875	44.844	0.16	0.16	1.28	80	3.2	1.10	81	2.3	77	0.100	99	99	0.4	0	335	245	306	325	314	305	616	215	70	51	70	51	69	-0.038	8.67	0.1
280	45.036	45.005	0.16	0.16	1.28	80	3.2	1.10	81	2.3	77	0.100	99	99	0.4	0	335	245	306	326	314	305	616	215	70	51	70	51	69	-0.037	8.6	0.09
281	45.197	45.166	0.16	0.16	1.29	80	3.2	1.10	81	2.3	77	0.100	99	99	0.4	0	335	245	307	326	314	305	615	215	70	51	70	51	69	-0.037	8.57	0.09
282	45.358	45.328	0.16	0.16	1.28	80	3.21	1.10	81	2.3	77	0.099	99	100	0.4	0	335	245	307	326	314	305	614	215	70	51	70	51	69	-0.037	8.54	0.09
283	45.520	45.489	0.16	0.16	1.29	80	3.19	1.10	81	2.3	77	0.100	99	99	0.4	0	335	246	307	327	314	306	613	215	70	51	70	51	69	-0.037	8.48	0.09
284	45.682	45.650	0.16	0.16	1.29	80	3.19	1.10	81	2.3	77	0.098	100	100	0.4	0	335	245	307	327	314	306	613	215	70	51	70	51	69	-0.037	8.45	0.09
285	45.843	45.811	0.16	0.16	1.27	80	3.19	1.10	81	2.3	77	0.100	99	99	0.3	-0.1	335	245	307	327	314	306	612	215	70	51	70	51	69	-0.038	8.35	0.09
286	46.003	45.973	0.16	0.16	1.28	80	3.19	1.10	81	2.3	77	0.101	98	99	0.3	0	335	245	307	327	314	306	611	215	70	51	70	51	68	-0.037	8.26	0.09
287	46.164	46.134	0.16	0.16	1.28	80	3.19	1.10	81	2.3	77	0.098	100	100	0.3	0	334	245	307	327	313	305	611	215	70	51	70	51	69	-0.037	8.22	0.09

Wood Heater Test Data

u

Run: 3

Manufacturer: Kuma
Model: K-181
Tracking No.: 2461
Project No.: 0123WM013E
Test Date: 14-Dec-22
Beginning Clock Time: 12:29

Total Sampling Time: 305 min
Recording Interval: 1 min
Background Sample Volume: 62.944 cubic feet

Meter Box Y Factor: 1.004 (1) 1.002 (2) 1.016 (Amb)

Barometric Pressure:	Begin	Middle	End	Average	
	30.39	30.37	30.4	30.39	0

OMNI Equipment Numbers:

PM Control Modules: 335, 00336
Dilution Tunnel MW(dry): 29.00 lb/lb-mole
Dilution Tunnel MW(wet): 28.78 lb/lb-mole
Dilution Tunnel H2O: 2.00 percent
Dilution Tunnel Static: -0.300 "H2O
Tunnel Area: 0.19625 ft2
Pitot Tube Cp: 0.99

Avg. Tunnel Velocity: 18.00 ft/sec.
Initial Tunnel Flow: 205.7 scfm
Average Tunnel Flow: 205.5 scfm
Post-Test Leak Check (1): 0.000 cfm @ 16 in. Hg
Post-Test Leak Check (2): 0.000 cfm @ 17 in. Hg
Average Test Piece Fuel Moisture: 21.13 Dry Basis %

Technician Signature:_____

Export to PDF

Velocity Traverse Data

	Pt.1	Pt.2	Pt.3	Pt.4	Pt.5	Pt.6	Pt.7	Pt.8	Center	
Initial dP	0.066	0.086	0.090	0.060	0.054	0.080	0.088	0.064	0.098	"H2O
Temp:	80	80	80	80	80	80	80	80	81	°F

V_{strav} 17.96 ft/sec V_{scent} 20.85 ft/sec F_p 0.862

	Particulate Sampling Data														Fuel Weight (lb)		Temperature Data (°F)												Stack Gas Data		
Elapsed Time (min)	Gas Meter 1 (ft^3)	Gas Meter 2 (ft^3)	Sample Rate 1 (cfm)	Sample Rate 2 (cfm)	Orifice dH 1 ("H_2O)	Meter 1 Temp (°F)	Meter 1 Vacuum ("Hg)	Orifice dH 2 ("H_2O)	Meter 2 Temp (°F)	Meter 2 Vacuum ("Hg)	Dilution Tunnel (°F)	Dilution Tunnel Center dP	Pro. Rate 1	Pro. Rate 2	Scale Reading	Weight Change	Firebox Top	Firebox Bottom	Firebox Back	Firebox Left	Firebox Right	Avg. Stove Surface	Catalyst Exit	Stack	Filter 1	Dryer Exit 1	Filter 2	Dryer Exit 2	Ambient	Draft ("H_2O)	CO_2 (%)	CO (%)
288	46.326	46.295	0.16	0.16	1.28	80	3.19	1.10	81	2.3	77	0.099	100	99	0.3	0	334	246	308	327	313	306	613	215	70	51	70	51	69	-0.037	8.19	0.1
289	46.487	46.457	0.16	0.16	1.28	80	3.2	1.10	81	2.3	77	0.099	99	100	0.3	0	335	246	308	327	313	306	614	215	70	51	70	51	69	-0.038	8.22	0.1
290	46.649	46.618	0.16	0.16	1.28	80	3.18	1.10	81	2.3	77	0.098	100	100	0.3	0	334	246	308	327	313	306	616	215	70	51	70	51	69	-0.037	8.2	0.1
291	46.810	46.779	0.16	0.16	1.28	80	3.2	1.10	81	2.3	77	0.098	100	100	0.3	0	335	246	308	327	313	306	618	215	70	51	70	51	69	-0.038	8.15	0.11
292	46.971	46.940	0.16	0.16	1.29	80	3.2	1.10	81	2.3	77	0.098	100	100	0.3	0	335	246	308	327	313	306	619	216	70	51	70	51	69	-0.038	8.19	0.11
293	47.132	47.102	0.16	0.16	1.28	80	3.19	1.10	81	2.3	77	0.097	100	101	0.2	-0.1	335	246	308	327	313	306	619	216	70	51	70	51	69	-0.038	8.05	0.11
294	47.294	47.263	0.16	0.16	1.29	80	3.2	1.10	81	2.3	77	0.099	100	99	0.2	0	334	246	308	327	312	305	618	216	70	51	70	51	69	-0.038	7.71	0.11
295	47.455	47.424	0.16	0.16	1.28	81	3.19	1.10	81	2.3	77	0.100	99	99	0.2	0	334	246	309	327	312	306	616	216	70	51	70	51	69	-0.038	7.69	0.1
296	47.617	47.585	0.16	0.16	1.28	81	3.19	1.10	81	2.3	77	0.100	99	99	0.2	0	334	246	309	326	312	305	612	216	70	51	70	51	69	-0.038	7.58	0.1
297	47.778	47.747	0.16	0.16	1.28	80	3.19	1.10	81	2.3	77	0.100	99	99	0.2	0	333	246	309	326	312	305	609	216	70	51	70	51	68	-0.038	7.49	0.1
298	47.939	47.908	0.16	0.16	1.29	80	3.2	1.10	81	2.3	76	0.099	99	99	0.2	0	332	246	309	326	312	305	607	215	70	51	70	51	69	-0.038	7.51	0.1
299	48.100	48.069	0.16	0.16	1.28	81	3.19	1.10	81	2.3	77	0.100	99	99	0.2	0	332	247	309	326	311	305	606	215	70	51	70	51	69	-0.038	7.43	0.1
300	48.261	48.231	0.16	0.16	1.29	81	3.19	1.10	81	2.3	77	0.100	99	99	0.2	0	331	247	309	325	311	305	604	215	70	51	70	51	69	-0.038	7.4	0.1
301	48.423	48.393	0.16	0.16	1.28	81	3.19	1.10	81	2.3	77	0.098	100	100	0.2	0	330	247	309	325	311	304	602	215	70	51	70	51	68	-0.038	7.36	0.1
302	48.585	48.553	0.16	0.16	1.29	81	3.2	1.10	81	2.3	77	0.100	99	98	0.1	-0.1	329	247	309	324	311	304	599	214	70	51	70	51	69	-0.037	7.16	0.1
303	48.746	48.715	0.16	0.16	1.28	81	3.2	1.10	81	2.3	77	0.097	100	101	0.1	0	328	248	309	324	311	304	596	214	70	51	70	51	69	-0.038	7.03	0.1
304	48.907	48.877	0.16	0.16	1.28	81	3.19	1.10	81	2.3	77	0.096	101	101	0.1	0	327	248	309	324	310	304	595	214	70	51	70	51	68	-0.038	7.01	0.1
305	49.068	49.038	0.16	0.16	1.28	81	3.2	1.10	81	2.3	77	0.099	99	99	0.0	-0.1	326	248	309	323	310	303	594	213	70	51	70	51	68	-0.037	6.91	0.1
Avg/Tot	49.068	49.038	0.16	0.16	1.28	80		1.10	80		82	0.098	100	100								86.8				49	71	49	69	-0.051		

Wood Heater Lab Data - ASTM E2780 / ASTM E2515

Manufacturer:	Kuma	Equipment Numbers:	
Model:	K-181		
Tracking No.:	2461		
Project No.:	0123WM013E		
Run #:	3		
Date:	12/14/22		

TRAIN 1 (First Hour emissions)

Sample Component	Reagent	Filter, Probe or Dish #	Weights		
			Final, mg	Tare, mg	Particulate, mg
B. Front filter catch	Filter	E859	119.6	118.7	0.9
C. Rear filter catch	Filter	E860	118.8	118.9	-0.1
D. Probe catch*	Probe	65	117079.0	117078.7	0.3
E. Filter seals catch*	Seals	S443	3363.4	3363.1	0.3

Sub-Total

Total Particulate, mg:	1.4

TRAIN 1 (Post First Hour Change-out)

Sample Component	Reagent	Filter, Probe or Dish #	Weights		
			Final, mg	Tare, mg	Particulate, mg
B. Front filter catch	Filter	E730	123.4	120.8	2.6
C. Rear filter catch	Filter	E731	120.8	121.2	-0.4
D. Probe catch*	Probe	4	114855.6	114855.1	0.5
E. Filter seals catch*	Seals	S444	3364.6	3363.9	0.7

Sub-Total

Total Particulate, mg:	3.4

Train 1 Aggregate

Total Particulate, mg:	**4.8**

TRAIN 2

Sample Component	Reagent	Filter, Probe or Dish #	Weights		
			Final, mg	Tare, mg	Particulate, mg
A. Front filter catch	Filter	E732	124.4	120.8	3.6
B. Rear filter catch	Filter	E733	120.3	120.2	0.1
C. Probe catch*	Probe	17	114561.7	114561.5	0.2
D. Filter seals catch*	Seals	S445	3397.3	3397.0	0.3

Total Particulate, mg:	**4.2**

AMBIENT

Sample Component	Reagent	Filter # or Probe #	Weights		
			Final, mg	Tare, mg	Particulate, mg
A. Front filter catch*	Filter	E734	121.1	121.2	0.0

Total Particulate, mg:	**0.0**

*Particulate catch that results in a negative number, is assumed to be zero for probes and seals, negative numbers for filters are assumed to be part of the seal weight.

Component	Equations:
A. Front filter catch	Final (mg) - Tare (mg) = Particulate, mg
B. Rear filter catch	Final (mg) - Tare (mg) = Particulate, mg
C. Probe catch	Final (mg) - Tare (mg) = Particulate, mg

Technician Signature:_____

Wood Heater Test Results - ASTM E2780 / ASTM E2515

Manufacturer:	Kuma
Model:	K-181
Project No.:	0123WM013E
Tracking No.:	2461
Run:	3
Test Date:	12/14/22

Burn Rate	**0.83**	**kg/hr dry**
Average Tunnel Temperature	82	degrees Fahrenheit
Average Gas Velocity in Dilution Tunnel - vs	18.00	feet/second
Average Gas Flow Rate in Dilution Tunnel - Qsd	12328.7	dscf/hour
Average Delta p	0.098	inches H20
Total Time of Test	305	minutes

	AMBIENT	SAMPLE TRAIN 1	SAMPLE TRAIN 2	FIRST HOUR FILTER (TRAIN 1)
Total Sample Volume - Vm	62.944 cubic feet	49.068 cubic feet	49.038 cubic feet	9.583 cubic feet
Average Gas Meter Temperature	69 degrees Fahrenheit	80 degrees Fahrenheit	80 degrees Fahrenheit	76 degrees Fahrenheit
Total Sample Volume (Standard Conditions) - Vmstd	64.816 dscf	49.080 dscf	48.886 dscf	9.648 dscf
Total Particulates - m_n	0 mg	4.8 mg	4.2 mg	1.4 mg
Particulate Concentration (dry-standard) - C_r/C_s	0.000000 grams/dscf	0.00010 grams/dscf	0.00009 grams/dscf	0.00015 grams/dscf
Total Particulate Emissions - E_T	0.00 grams	6.13 grams	5.38 grams	1.79 grams
Particulate Emission Rate	0.00 grams/hour	1.21 grams/hour	1.06 grams/hour	1.79 grams/hour
Emissions Factor		1.45 g/kg	1.27 g/kg	1.29 g/kg
Difference from Average Total Particulate Emissions		0.37 grams	0.37 grams	

Dual Train Comparison Results Are Acceptable

FINAL AVERAGE RESULTS

Complete Test Run	
Total Particulate Emissions - E_T	5.76 grams
Particulate Emission Rate	**1.13 grams/hour**
Emissions Factor	1.36 grams/kg
First Hour Emissions	
Total Particulate Emissions - E_T	1.79 grams
Particulate Emission Rate	1.79 grams/hour
Emissions Factor	1.29 grams/kg
7.5% of Average Total Particulate Emissions	0.43 grams

QUALITY CHECKS

Filter Temps < 90 °F	OK
Filter Face Velocity (47 mm)	OK
Dryer Exit Temp < 80F	OK
Leakage Rate	OK
Ambient Temp (55-90°F)	OK
Negative Probe Weight Eval.	OK
Pro-Rate Variation	OK
Stove Surface ΔT	OK
Train Precesion 7.5%	6.47
Train Precision 0.5g/kg	0.18

Technician Signature:_____

Wood Heater Lab Data - ASTM E2780 / ASTM E2515

Manufacturer:	Kuma	Equipment Numbers:	
Model:	K-181		
Tracking No.:	2461		
Project No.:	0123WM013E		
Run #:	3		
Date:	12/14/22		

Uncorrected

TRAIN 1 (First Hour emissions)

Sample Component	Reagent	Filter, Probe or Dish #	Weights		
			Final, mg	Tare, mg	Particulate, mg
B. Front filter catch	Filter	E859	119.6	118.7	0.9
C. Rear filter catch	Filter	E860	118.8	118.9	0.0
D. Probe catch*	Probe	65	117079.0	117078.7	0.3
E. Filter seals catch*	Seals	S443	3363.4	3363.1	0.3

Sub-Total	Total Particulate, mg:	1.5

TRAIN 1 (Post First Hour Change-out)

Sample Component	Reagent	Filter, Probe or Dish #	Weights		
			Final, mg	Tare, mg	Particulate, mg
B. Front filter catch	Filter	E730	123.4	120.8	2.6
C. Rear filter catch	Filter	E731	120.8	121.2	0.0
D. Probe catch*	Probe	4	114855.6	114855.1	0.5
E. Filter seals catch*	Seals	S444	3364.6	3363.9	0.7

Sub-Total	Total Particulate, mg:	3.8

Train 1 Aggregate	Total Particulate, mg:	**5.3**

TRAIN 2

Sample Component	Reagent	Filter, Probe or Dish #	Weights		
			Final, mg	Tare, mg	Particulate, mg
A. Front filter catch	Filter	E732	124.4	120.8	3.6
B. Rear filter catch	Filter	E733	120.3	120.2	0.1
C. Probe catch*	Probe	17	114561.7	114561.5	0.2
D. Filter seals catch*	Seals	S445	3397.3	3397.0	0.3

Total Particulate, mg:	**4.2**

AMBIENT

Sample Component	Reagent	Filter # or Probe #	Weights		
			Final, mg	Tare, mg	Particulate, mg
A. Front filter catch*	Filter	E734	121.1	121.2	0.0

Total Particulate, mg:	**0.0**

*Particulate catch that results in a negative number, is assumed to be zero for probes and seals, negative numbers for filters are assumed to be part of the seal weight.

Component	Equations:
A. Front filter catch	Final (mg) - Tare (mg) = Particulate, mg
B. Rear filter catch	Final (mg) - Tare (mg) = Particulate, mg
C. Probe catch	Final (mg) - Tare (mg) = Particulate, mg

Technician Signature:_____

Wood Heater Test Results - ASTM E2780 / ASTM E2515

Manufacturer:	Kuma
Model:	K-181
Project No.:	0123WM013E
Tracking No.:	2461
Run:	3
Test Date:	12/14/22

Burn Rate	**0.83**	**kg/hr dry**
Average Tunnel Temperature	82	degrees Fahrenheit
Average Gas Velocity in Dilution Tunnel - vs	18.00	feet/second
Average Gas Flow Rate in Dilution Tunnel - Qsd	12328.7	dscf/hour
Average Delta p	0.098	inches H20
Total Time of Test	305	minutes

Uncorrected

	AMBIENT	SAMPLE TRAIN 1	SAMPLE TRAIN 2	FIRST HOUR FILTER (TRAIN 1)
Total Sample Volume - Vm	62.944 cubic feet	49.068 cubic feet	49.038 cubic feet	9.583 cubic feet
Average Gas Meter Temperature	69 degrees Fahrenheit	80 degrees Fahrenheit	80 degrees Fahrenheit	76 degrees Fahrenheit
Total Sample Volume (Standard Conditions) - Vmstd	64.816 dscf	49.080 dscf	48.886 dscf	9.648 dscf
Total Particulates - m_n	0 mg	5.3 mg	4.2 mg	1.5 mg
Particulate Concentration (dry-standard) - C_r/C_s	0.000000 grams/dscf	0.00011 grams/dscf	0.00009 grams/dscf	0.00016 grams/dscf
Total Particulate Emissions - E_T	0.00 grams	6.77 grams	5.38 grams	1.92 grams
Particulate Emission Rate	0.00 grams/hour	1.33 grams/hour	1.06 grams/hour	1.92 grams/hour
Emissions Factor		1.60 g/kg	1.27 g/kg	1.38 g/kg
Difference from Average Total Particulate Emissions		0.69 grams	0.69 grams	

Dual Train Comparison Results Are Acceptable

FINAL AVERAGE RESULTS

Complete Test Run	
Total Particulate Emissions - E_T	6.08 grams
Particulate Emission Rate	**1.20 grams/hour**
Emissions Factor	1.44 grams/kg
First Hour Emissions	
Total Particulate Emissions - E_T	1.92 grams
Particulate Emission Rate	1.92 grams/hour
Emissions Factor	1.38 grams/kg
7.5% of Average Total Particulate Emissions	0.46 grams

QUALITY CHECKS

Filter Temps < 90 °F	OK
Filter Face Velocity (47 mm)	OK
Dryer Exit Temp < 80F	OK
Leakage Rate	OK
Ambient Temp (55-90°F)	OK
Negative Probe Weight Eval.	OK
Pro-Rate Variation	OK
Stove Surface ΔT	OK
Train Precesion 7.5%	11.38
Train Precision 0.5g/kg	0.33

Technician Signature:_____

VERSION: 2.4 4/15/2010

Manufacturer: Kuma Industries
Model: K-181
Date: 12/14/2022
Run: 3
Control #: 0123WM013E
Test Duration: 305
Output Category: 2

Appliance Type: Cat (Cat, Non-Cat, Pellet)

Temp. Units F (F or C)
Weight Units lb (kg or lb)

Default Fuel Values

	D. Fir	Oak
HHV (kJ/kg)	19,810	19,887
%C	48.73	50
%H	6.87	6.6
%O	43.9	42.9
%Ash	0.5	0.5

Wood Moisture (% wet): 17.44
Load Weight (lb wet): 11.30
Burn Rate (dry kg/h): 0.83
Total Particulate Emissions: 5.76 g

Fuel Data

	D. Fir	
HHV	19,810	kJ/kg
%C	48.73	
%H	6.87	
%O	43.9	
%Ash	0.5	

Note 1: For other fuels, use the heating value and fuel composition determined by analysis of fuel sample in accordance with Clause 9.2.

Note 2: In cases where the "Fuel Weight Remaining" is the same for three or more readings in a row, a "divide by zero error" will occur in the calculation sheet. In such cases, adjust the weight values by interpolation between the first occurence and the next reading showing a decrease in weight.

	Averages	0.13	10.29	#DIV/0!	286.00	68.87
					Temp. (ºF)	
Elapsed Time (min)	Fuel Weight Remaining (lb)	Flue Gas Composition (%) CO	CO_2	O_2	Flue Gas	Room Temp
0	11.30	0.40	1.50		281.0	69.0
1	12.10	0.28	1.01		290.0	69.0
2	11.20	0.29	3.65		305.0	69.0
3	11.10	0.08	7.27		358.0	69.0
4	11.00	0.10	9.05		403.0	69.0
5	10.90	0.09	9.32		438.0	69.0
6	10.90	0.07	10.77		372.0	69.0
7	10.90	0.04	6.12		338.0	69.0
8	10.80	0.04	5.86		316.0	69.0
9	10.80	0.04	5.85		303.0	68.0
10	10.80	0.03	5.90		293.0	69.0
11	10.70	0.04	6.43		287.0	69.0
12	10.70	0.04	6.90		285.0	69.0
13	10.60	0.04	6.72		283.0	69.0
14	10.60	0.04	6.31		282.0	69.0
15	10.60	0.05	6.38		280.0	69.0
16	10.50	0.04	6.47		278.0	69.0
17	10.50	0.05	6.61		277.0	68.0
18	10.40	0.05	6.84		277.0	69.0

19	10.40	0.06	7.25		278.0	69.0
20	10.40	0.05	7.83		279.0	68.0
21	10.30	0.06	7.27		281.0	69.0
22	10.30	0.06	7.21		281.0	69.0
23	10.20	0.05	7.53		282.0	69.0
24	10.20	0.05	7.91		282.0	68.0
25	10.10	0.05	8.29		284.0	69.0
26	10.10	0.06	8.20		285.0	69.0
27	10.00	0.06	7.74		287.0	69.0
28	10.00	0.06	7.66		287.0	68.0
29	9.90	0.06	7.96		287.0	69.0
30	9.90	0.06	8.43		288.0	69.0
31	9.80	0.06	8.90		290.0	69.0
32	9.80	0.06	9.54		292.0	69.0
33	9.70	0.07	9.92		294.0	69.0
34	9.70	0.08	11.43		299.0	69.0
35	9.60	0.08	13.61		305.0	69.0
36	9.50	0.09	14.29		313.0	69.0
37	9.40	0.10	13.64		320.0	69.0
38	9.30	0.09	13.01		325.0	69.0
39	9.20	0.09	13.16		328.0	69.0
40	9.20	0.11	13.84		334.0	68.0
41	9.10	0.12	14.58		339.0	68.0
42	9.00	0.14	15.48		346.0	69.0
43	8.90	0.14	15.82		351.0	69.0
44	8.80	0.13	15.56		356.0	69.0
45	8.70	0.11	15.56		360.0	69.0
46	8.60	0.11	15.16		362.0	69.0
47	8.50	0.11	15.00		363.0	68.0
48	8.50	0.10	14.18		362.0	69.0
49	8.40	0.1	14.01		362	69
50	8.30	0.1	14.63		362	69
51	8.20	0.09	14.82		362	69
52	8.10	0.08	14.58		360	69
53	8.10	0.08	14.26		359	69
54	8.00	0.07	13.86		357	69
55	7.90	0.08	13.3		355	69
56	7.90	0.07	12.19		352	69
57	7.80	0.07	11.93		350	69

58	7.70	0.07	11.8		347	69
59	7.70	0.06	11.79		344	69
60	7.60	0.07	11.99		342	69
61	7.50	0.07	12.06		340	69
62	7.50	0.07	12.34		339	69
63	7.40	0.07	12.39		338	68
64	7.40	0.07	12.47		337	69
65	7.30	0.08	12.76		337	68
66	7.20	0.08	13		337	68
67	7.20	0.08	13.27		339	69
68	7.10	0.08	13.45		340	69
69	7.00	0.08	13.75		339	69
70	7.00	0.08	13.89		340	69
71	6.90	0.08	13.82		340	69
72	6.80	0.08	13.8		341	69
73	6.70	0.08	13.9		341	69
74	6.70	0.08	14.01		342	69
75	6.60	0.09	14.2		343	69
76	6.50	0.09	14.34		345	69
77	6.50	0.09	14.43		345	69
78	6.40	0.09	14.75		345	69
79	6.30	0.21	15.18		348	69
80	6.30	0.24	15.58		353	69
81	6.20	0.25	15.6		358	69
82	6.10	0.26	15.36		362	69
83	6.00	0.25	14.79		364	69
84	6.00	0.25	14.38		365	69
85	5.90	0.25	14.11		366	69
86	5.90	0.25	13.93		366	69
87	5.80	0.25	13.86		366	69
88	5.70	0.25	13.84		366	69
89	5.70	0.24	13.87		366	69
90	5.60	0.25	13.88		367	69
91	5.60	0.25	13.93		367	69
92	5.50	0.25	13.89		368	69
93	5.40	0.25	13.96		368	69
94	5.40	0.25	13.96		368	69
95	5.30	0.25	13.87		368	69
96	5.20	0.25	13.82		368	69

97	5.20	0.25	13.73		367	69
98	5.10	0.25	13.66		367	69
99	5.10	0.25	13.79		366	69
100	5.00	0.26	13.87		367	69
101	4.90	0.26	13.79		366	69
102	4.90	0.25	13.69		366	69
103	4.80	0.25	13.69		366	69
104	4.80	0.26	13.8		366	69
105	4.70	0.25	13.69		365	69
106	4.70	0.25	13.6		365	69
107	4.60	0.25	13.45		364	69
108	4.50	0.25	13.32		364	69
109	4.50	0.24	13.34		362	69
110	4.40	0.24	13.2		362	69
111	4.40	0.24	13.06		362	69
112	4.30	0.23	12.91		361	69
113	4.30	0.23	12.74		360	69
114	4.20	0.22	12.65		359	69
115	4.20	0.22	12.54		358	69
116	4.10	0.22	12.68		358	69
117	4.00	0.22	12.55		356	69
118	4.00	0.13	13.22		359	69
119	4.00	0.09	13.54		353	69
120	3.90	0.09	13.69		350	69
121	3.80	0.09	13.68		347	69
122	3.80	0.09	13.68		342	69
123	3.70	0.09	13.67		339	69
124	3.70	0.08	13.43		337	69
125	3.60	0.09	13.41		334	69
126	3.60	0.09	13.26		331	69
127	3.60	0.06	13.3		327	69
128	3.50	0.07	13.28		323	69
129	3.50	0.06	13.71		321	69
130	3.40	0.07	13.87		318	69
131	3.40	0.06	13.87		316	69
132	3.30	0.07	14.06		315	69
133	3.30	0.06	14.24		313	69
134	3.20	0.05	14.21		312	69
135	3.20	0.06	14.04		311	69

136	3.10	0.05	13.86		310	69
137	3.10	0.06	13.34		307	69
138	3.00	0.06	12.85		305	69
139	3.00	0.08	12.43		304	69
140	3.00	0.08	12.23		303	69
141	2.90	0.08	12.09		301	69
142	2.90	0.08	11.87		300	69
143	2.90	0.08	12.17		297	69
144	2.80	0.09	11.74		295	69
145	2.80	0.1	11.52		293	69
146	2.80	0.1	11.45		291	69
147	2.70	0.11	11.47		289	69
148	2.70	0.11	11.33		287	69
149	2.70	0.12	11.15		286	69
150	2.70	0.12	11.1		285	69
151	2.60	0.12	11.04		284	69
152	2.60	0.12	10.99		283	69
153	2.60	0.13	10.93		283	69
154	2.60	0.13	10.9		283	69
155	2.50	0.13	10.76		282	69
156	2.50	0.13	10.69		281	69
157	2.50	0.13	10.68		280	69
158	2.40	0.13	10.67		280	69
159	2.40	0.13	10.69		280	69
160	2.40	0.13	10.75		279	69
161	2.40	0.14	10.87		278	69
162	2.30	0.13	11.06		278	69
163	2.30	0.13	11.04		278	69
164	2.30	0.13	10.99		278	69
165	2.30	0.13	11.06		278	69
166	2.20	0.13	11.08		279	69
167	2.20	0.13	11.14		279	69
168	2.20	0.12	11.04		278	69
169	2.10	0.13	11.21		279	69
170	2.10	0.13	11.1		280	70
171	2.10	0.13	10.95		280	70
172	2.00	0.12	11.29		281	69
173	2.00	0.11	11.04		283	69
174	2.00	0.11	10.98		283	69

175	1.90	0.12	11.14		282	69
176	1.90	0.18	11.31		284	69
177	1.90	0.2	11.42		286	69
178	1.80	0.14	11.67		291	70
179	1.80	0.11	11.02		291	69
180	1.80	0.11	11.1		291	69
181	1.70	0.12	10.89		290	69
182	1.70	0.11	10.51		291	69
183	1.70	0.14	10.3		288	70
184	1.70	0.18	10.31		288	69
185	1.60	0.18	9.97		289	69
186	1.60	0.15	9.58		288	69
187	1.60	0.15	9.38		287	69
188	1.60	0.15	9.09		287	69
189	1.50	0.15	8.71		285	69
190	1.50	0.14	8.38		283	69
191	1.50	0.14	8.1		280	69
192	1.50	0.12	8.03		278	69
193	1.50	0.12	7.8		275	69
194	1.50	0.12	7.64		272	69
195	1.50	0.12	7.54		269	69
196	1.40	0.12	7.44		266	69
197	1.40	0.12	7.34		264	69
198	1.40	0.12	7.26		261	69
199	1.40	0.12	7.21		259	69
200	1.40	0.12	7.2		256	69
201	1.40	0.11	7.1		254	69
202	1.40	0.11	7.07		253	68
203	1.30	0.11	7.04		251	69
204	1.30	0.11	7.01		250	69
205	1.30	0.12	6.97		248	69
206	1.30	0.11	6.91		246	69
207	1.30	0.12	6.84		245	69
208	1.30	0.12	6.77		243	69
209	1.30	0.12	6.68		241	69
210	1.30	0.12	6.62		240	69
211	1.30	0.12	6.49		238	69
212	1.30	0.12	6.42		237	68
213	1.30	0.11	6.23		236	69

214	1.20	0.11	6.09		234	69
215	1.20	0.11	6.1		233	69
216	1.20	0.11	6.1		231	68
217	1.20	0.11	6.09		231	68
218	1.20	0.11	6.05		230	68
219	1.20	0.12	6.05		228	68
220	1.20	0.12	5.98		228	68
221	1.20	0.12	5.94		226	68
222	1.20	0.12	5.94		226	68
223	1.20	0.12	6.05		225	68
224	1.20	0.12	6.27		224	68
225	1.20	0.12	6.21		223	69
226	1.10	0.12	6.21		222	68
227	1.10	0.18	4.44		278	69
228	1.10	1.99	5.15		242	69
229	1.10	0.51	8.47		227	68
230	1.10	0.09	9		222	68
231	1.00	0.09	9.04		220	69
232	1.00	0.08	8.84		219	68
233	1.00	0.08	8.65		217	68
234	1.00	0.09	8.47		217	68
235	1.00	0.09	8.46		216	69
236	1.00	0.09	8.43		216	69
237	1.00	0.09	8.39		215	69
238	0.90	0.09	8.34		215	69
239	0.90	0.09	8.35		215	69
240	0.90	0.1	8.41		215	69
241	0.90	0.1	8.44		215	68
242	0.90	0.1	8.53		215	69
243	0.90	0.1	8.56		215	69
244	0.90	0.1	8.6		215	69
245	0.90	0.1	8.62		215	68
246	0.90	0.1	8.57		216	68
247	0.80	0.1	8.61		215	69
248	0.80	0.09	8.61		216	69
249	0.80	0.09	8.43		215	68
250	0.80	0.1	8.47		215	68
251	0.80	0.1	8.58		215	68
252	0.80	0.1	8.39		216	69

253	0.80	0.11	8.38		216	68
254	0.80	0.1	8.41		215	69
255	0.70	0.1	8.39		216	69
256	0.70	0.1	8.38		216	69
257	0.70	0.1	8.47		216	68
258	0.70	0.1	8.53		216	69
259	0.70	0.1	8.57		216	68
260	0.70	0.1	8.67		216	69
261	0.70	0.1	8.77		216	69
262	0.60	0.1	8.79		216	69
263	0.60	0.09	8.88		216	69
264	0.60	0.09	8.98		215	69
265	0.60	0.09	8.99		215	69
266	0.60	0.09	9.01		215	69
267	0.60	0.09	9.09		215	69
268	0.60	0.09	9.01		214	68
269	0.50	0.09	8.99		214	68
270	0.50	0.1	8.93		214	68
271	0.50	0.1	8.88		215	69
272	0.50	0.09	8.86		215	69
273	0.50	0.1	8.92		215	69
274	0.50	0.1	9.01		215	69
275	0.50	0.09	8.97		215	69
276	0.50	0.09	8.88		214	69
277	0.40	0.09	8.93		214	69
278	0.40	0.1	8.83		214	69
279	0.40	0.1	8.67		215	69
280	0.40	0.09	8.6		215	69
281	0.40	0.09	8.57		215	69
282	0.40	0.09	8.54		215	69
283	0.40	0.09	8.48		215	69
284	0.40	0.09	8.45		215	69
285	0.30	0.09	8.35		215	69
286	0.30	0.09	8.26		215	68
287	0.30	0.09	8.22		215	69
288	0.30	0.1	8.19		215	69
289	0.30	0.1	8.22		215	69
290	0.30	0.1	8.2		215	69
291	0.30	0.11	8.15		215	69

292	0.30	0.11	8.19		216	69
293	0.20	0.11	8.05		216	69
294	0.20	0.11	7.71		216	69
295	0.20	0.1	7.69		216	69
296	0.20	0.1	7.58		216	69
297	0.20	0.1	7.49		216	68
298	0.20	0.1	7.51		215	69
299	0.20	0.1	7.43		215	69
300	0.20	0.1	7.4		215	69
301	0.20	0.1	7.36		215	68
302	0.10	0.1	7.16		214	69
303	0.10	0.1	7.03		214	69
304	0.10	0.1	7.01		214	68
305	0.00	0.1	6.91		213	68

ABC Laboratories, Inc.

Manufacturer: Kuma Industries
Model: K-181
Date: 12/14/22
Run: 3
Control #: 0123WM013E
Test Duration: 305
Output Category: 2

Technicians: _____

_____

_____

Test Results in Accordance with CSA B415.1-10

	HHV Basis	LHV Basis
Overall Efficiency	81.6%	88.2%
Combustion Efficiency	99.5%	99.5%
Heat Transfer Efficiency	82%	88.6%

Output Rate (kJ/h)	13,455	12,764	**(Btu/h)**
Burn Rate (kg/h)	0.83	1.84	**(lb/h)**
Input (kJ/h)	16,496	15,648	**(Btu/h)**

Test Load Weight (dry kg)	4.23	9.33	**dry lb**
MC wet (%)	17.44		
MC dry (%)	21.12		
Particulate (g)	5.76		
CO (g)	34		
Test Duration (h)	5.08		

Emissions	Particulate	CO
g/MJ Output	0.08	0.50
g/kg Dry Fuel	1.36	8.07
g/h	1.13	6.72
lb/MM Btu Output	0.20	1.16

Air/Fuel Ratio (A/F)	10.79

VERSION: **2.4** **4/15/2010**

6OMNI-Test Laboratories, Inc. **ASTM E2780 Wood Heater Run Sheets**

Client: Kuma Project Number: 0123WM013E Run Number: 3

Model: K-181 Tracking Number: 2461 Date: 12/14/2022

Test Crew: TT, BD

OMNI Equipment ID numbers: 00637, 00709, 00283A

ASTM E2515 Lab Sheet

Assembled By:

Tony Tong

Date/Time in Dessicator:

12/14/22, 17:55

	Weighing #1	Weighing #2	Weighing #3	Weighing #4	Weighing #5
Date/Time:	12/20/22 9:00	12/21/22 10:00			
R/H %:	9.6	11.2			
Temp:	63.3	64.7			
200 mg Audit:	200.1	200.1			
2 g Audit:	2000.3	2000.3			
100 g Audit:	99997.9	99998.0			
Initials:	TT	TT			

Train	Element	ID #	Tare (mg)	Weight (mg)	Weight (mg)	Weight (mg)	Weight (mg)	Weight (mg)
A (First Hour)	Front Filter	E859	118.7 ✓	119.8	119.6 ✓			
	Rear Filter	E860	118.9 ✓	118.8	118.8 ✓			
	Probe	65	117078.7 ✓	117078.8	117079.0 ✓			
	O-Ring Set	S443	3363.1 ✓	3363.5	3363.4 ✓			
A (Remainder)	Front Filter	E730	120.8 ✓	123.4	123.4 ✓			
	Rear Filter	E731	121.2 ✓	120.9	120.8 ✓			
	Probe	4	114855.1 ✓	114855.5	114855.6 ✓			
	O-Ring Set	S444	3363.9 ✓	3364.5	3364.6 ✓			
B	Front Filter	E732	120.8 ✓	124.6	124.4 ✓			
	Rear Filter	E733	120.2 ✓	120.5	120.3 ✓			
	Probe	17	114561.5 ✓	114561.7	114561.7 ✓			
	O-Ring Set	S445	3397.3 ✓	3397.5	3397.3 ✓			
BG	Filter	E734	121.2 ✓	121.0	121.1 ✓			

Technician Signature: Tony Tong Date: 12/21/2022

6OMNI-Test Laboratories, Inc. **ASTM E2780 Wood Heater Run Sheets**

Client: Kuma Project Number: 0123WM013E Run Number: 3

Model: K-181 Tracking Number: 2461 Date: 12/14/2022

Test Crew: TT, BD

OMNI Equipment ID numbers: 00335, 00336, 00594, 00185

Wood Heater Run Notes

Air Control Settings

Primary:

Push air control all the way to the stop.

Secondary: Fixed

Tertiary/Pilot: N/A

Fan: On low @ 30 min

Preburn Notes

Time	Notes
8:01	Loading first rick and kindling (9.2 lbs + 4.1 lbs).
9:47	Adding second rick 9.1 lbs at 1.1 lbs of coal.
10:45	Adding preburn rick 9.7 lbs at 1.5 lbs of coal.
11:08	Recording Preburn @ 5.0 lbs.

Test Notes

Sketch test fuel configuration:

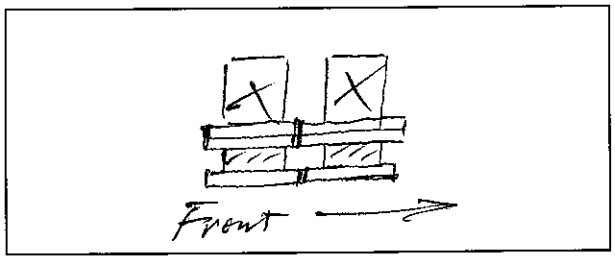

Start up procedures & Timeline:

Bypass: Used for fuel loading

Fuel loaded by: 60 seconds

Door closed at: 90 seconds

Primary air: ~~Open for 5 mins then set to test setting~~ fully closed

Notes: ~~Fan off for first 30 mins then on low for the~~ remainder of the Test.

Time	Notes
12:29	Test started
13:29	First hour filters changed
16:16	stirring the coal

Technician Signature: Tom Ford Date: 12/14/22

ASTM E2780 Wood Heater Run Sheets

Client: Kuma Project Number: 0123WM013E Run Number: 3
Model: K-181 Tracking Number: 2461 Date: 12/14/2022
Test Crew: TT, BD
OMNI Equipment ID numbers: 00594, 00335, 00336, 00322, 00440, 00716, 00255, 00677

Wood Heater Supplemental Data

Start Time: 12:29 Booth #: E1
Stop Time: 17:34

Stack Gas Leak Check:
Initial: good Final: good

Sample Train Leak Check:
A1 0.000 @ 14.62 "Hg
A: 0.000 @ 15.55 "Hg
B: 0.000 @ 16.15 "Hg

Calibrations: Span Gas CO_2: 16.94/10.08 CO: 4.32/2.53

	Pre Test		Post Test	
	Zero	Span	Zero	Span
Time	11:42	11:45	17:45	17:47
CO_2	0.00	16.94/~~4.33~~ 10.06	0.00	16.91/10.05
CO	0.00	4.33/2.51	0.00	4.33/2.50

Air Velocity (ft/min): Initial: <50 Final: <50
Scale Audit (lbs): Initial: 10 Final: 10
Pitot Tube Leak Test: Initial: good Final: good
Stack Diameter (in): 6
Induced Draft: 0.001
% Smoke Capture: 100
Flue Pipe Cleaned Prior to First Test in Series:
Date: 12/01/22 Initials: TT

	Initial	Middle	Ending
P_b (in/Hg)	30.39	30.37	30.40
RH (%)	35%	34	34
Ambient (°F)	69	69	68

Tunnel Traverse		
Microtector Reading	dP (in H_2O)	T(°F)
1	.066	80
2	.086	80
3	.090	80
4	.060	80
5	.054	80
6	.080	80
7	.088	80
8	.064	80
Center:		
	.098	81

Tunnel Static Pressure (in H_20):	
Beginning of Test	End of Test
−0.30	−0.30

Background Filter Volume: 62.944 ft^3

Technician Signature: Tony Tong Date: 12/14/22

ASTM E2780 Wood Heater Run Sheets

Client: Kuma Project Number: 0123WM013E Run Number: 3
Model: K-181 Tracking Number: 2461 Date: 12/14/2022
Test Crew: TT, BD
OMNI Equipment ID numbers: 00340, 00431, T61, 00353

Wood Heater Fuel Data

Fuel: Douglas fir, untreated and air dried, standard grade or better dimensional lumber

Pre-Burn Fuel

Calibration: Cal Value (1) = 12% Actual Reading 12.4
Cal Value (2) = 22% Actual Reading 22.9

Piece:	Length:	Reading:	Piece:	Length:	Reading:
1	12 in	19.1	7	12 in	23.8
2	12 in	21.5	8	8 in	19.8
3	12 in	22.6	9	____ in	____
4	12 in	24.7	10	____ in	____
5	12 in	23.8	11	____ in	____
6	12 in	22.8	12	____ in	____

Total Pre-Burn Fuel Weight: 9.7 lbs Pre-Burn Fuel Average Moisture: ____

Time (clock): 9:40 Room Temperature (F): 73 Initials: TT

Test Fuel

Firebox Volume (ft³): 1.73 1
Load Weight Range (lb): ~~(10.9, 13.3)~~ (12.3, 12.8)

Test Fuel Piece Length (in): 15.25
Total Wet Fuel Load Weight (lb): 11.3

Fuel Type & Amount: 2 x 4: 2 4 x 4: 2
Weight (with spacers): 4.2 Weight (with spacers): 7.1

Piece:	Weight (lbs):	Moisture Readings (%DB):			Fuel Type:
1	1.6	22.0	19.2	19.5	2x4
2	1.6	20.1	19.9	19.7	2x4
3	3.7	22.2	22.5	19.7	4x4
4	3.0	23.3	20.8	19.5	4x4
5					
6					
7					

Spacer Moisture Readings (%DB)

22.1	23.8	24.5	23.8	24.4	24.4	21.9	20.6
19.3	24.8	21.5	19.8				

Time (clock): 10:00 Room Temperature (F): 73 Initials: TT

Technician Signature: Tony Tong Date: 12/14/2022

Run 4

Medium High Burn (Category III)

Wood Heater Preburn Data - ASTM E2780

Run: 4

Technician Signature:_____

Manufacturer:	Kuma
Model:	K-181
Tracking No.:	2461
Project No.:	0123WM013E
Test Date:	12/15/22
Beginning Clock Time:	11:10

Preburn Fuel Data

Fuel Piece Lengths (in.):	11		
Total Preburn Weight (lb):	9.6		
Fuel Moisture Readings (% DB):	19.7	23.8	23.8
	19.4	19.3	20.4
	22.8	20.9	
Avg Preburn Moisture (% DB):	**21.26**		

Coal Bed Range (lb):	**2.3** (min)	**2.9** (max)

			Temperatures (°F)							
Elapsed Time (min)	Scale (lb)	Stack Draft (in H_2O)	FB Top	FB Bottom	FB Back	FB Left	FB Right	Avg. FB	Stack	Ambient
0	6.4	-0.087	670	300	413	494	472	470	601	68
1	6.2	-0.086	666	302	414	495	472	470	565	69
2	6	-0.085	662	303	414	497	473	470	546	68
3	5.9	-0.084	659	304	414	498	474	470	534	68
4	5.7	-0.083	656	305	413	500	475	470	525	69
5	5.6	-0.082	653	305	412	501	476	469	518	69
6	5.4	-0.082	649	306	411	501	477	469	512	68
7	5.2	-0.081	645	306	409	502	479	468	508	67
8	5.1	-0.082	642	306	408	503	480	468	503	69
9	4.9	-0.081	638	306	406	504	481	467	499	68
10	4.8	-0.08	634	306	404	504	482	466	495	68
11	4.6	-0.08	631	306	403	505	483	466	493	67
12	4.5	-0.08	629	306	401	505	484	465	491	68
13	4.3	-0.08	626	305	400	506	486	465	489	68
14	4.2	-0.079	624	305	399	506	487	464	485	68
15	4.1	-0.078	622	305	397	506	489	464	482	69
16	4	-0.079	619	304	397	507	490	463	479	69
17	3.8	-0.077	616	304	396	507	492	463	476	68
18	3.7	-0.076	613	304	396	508	494	463	472	68
19	3.6	-0.076	609	304	395	509	496	463	467	68
20	3.6	-0.075	604	304	395	509	498	462	462	68
21	3.5	-0.075	599	304	395	510	500	462	456	69
22	3.4	-0.075	594	303	395	511	502	461	452	68
23	3.3	-0.074	589	303	396	512	505	461	448	68
24	3.2	-0.074	584	303	396	513	507	461	445	69
25	3.2	-0.073	579	303	397	514	509	460	441	68
26	3.1	-0.072	575	303	398	514	511	460	438	67
27	3	-0.072	572	302	399	515	514	460	435	67
28	3	-0.071	568	302	400	516	516	460	431	67
29	2.9	-0.07	563	302	402	516	518	460	427	67
30	2.9	-0.07	557	302	404	517	519	460	422	67
31	2.8	-0.068	550	302	407	516	521	459	416	68
32	2.8	-0.069	541	302	410	517	522	458	411	68
33	2.8	-0.068	532	302	413	517	522	457	406	68
34	2.7	-0.066	521	303	415	517	523	456	399	68
35	2.7	-0.066	511	302	418	517	523	454	393	69
36	2.7	-0.065	500	302	420	517	523	452	387	69
37	2.6	-0.065	490	302	421	516	523	450	383	68
38	2.6	-0.064	481	303	422	515	523	449	379	68
39	2.6	-0.064	471	304	422	515	522	447	418	69

Wood Heater Preburn Data - ASTM E2780

Run: 4

Technician Signature:_____

Manufacturer:	Kuma
Model:	K-181
Tracking No.:	2461
Project No.:	0123WM013E
Test Date:	12/15/22
Beginning Clock Time:	11:10

Preburn Fuel Data

Fuel Piece Lengths (in.):	11		
Total Preburn Weight (lb):	9.6		
Fuel Moisture Readings (% DB):	19.7	23.8	23.8
	19.4	19.3	20.4
	22.8	20.9	
Avg Preburn Moisture (% DB):	**21.26**		

Coal Bed Range (lb):	**2.3** (min)	**2.9** (max)

			Temperatures (°F)							
Elapsed Time (min)	Scale (lb)	Stack Draft (in H_2O)	FB Top	FB Bottom	FB Back	FB Left	FB Right	Avg. FB	Stack	Ambient
40	2.6	-0.064	457	304	421	513	520	443	382	69
41	2.6	-0.064	447	304	420	512	518	440	372	68
42	2.6	-0.063	437	303	419	510	517	437	366	67
43	2.5	-0.062	428	303	418	508	516	435	361	69
44	2.5	-0.061	419	304	415	505	514	431	357	67
45	2.5	-0.061	411	304	413	503	512	429	352	67
46	2.5	-0.061	403	305	410	500	509	425	347	68
47	2.5	-0.06	396	305	407	497	507	422	343	68
48	2.5	-0.06	388	305	404	493	504	419	340	68
49	2.5	-0.059	382	306	400	490	501	416	336	68
50	2.5	-0.058	375	306	397	486	498	412	333	68
51	2.5	-0.058	368	305	393	483	495	409	329	68
52	2.4	-0.057	362	305	389	479	491	405	326	68
53	2.4	-0.057	356	305	385	475	488	402	323	68
54	2.4	-0.057	351	305	382	471	485	399	320	68
55	2.4	-0.056	346	305	378	467	481	395	318	68
56	2.4	-0.056	342	305	374	464	478	393	316	68
57	2.4	-0.056	338	305	370	460	475	390	315	67
58	2.4	-0.056	335	305	366	456	471	387	313	68
59	2.4	-0.055	331	304	362	452	468	383	312	68
60	2.3	-0.055	328	304	359	449	465	381	310	67

Wood Heater Test Fuel Data - ASTM E2780

Manufacturer:	Kuma
Model:	K-181
Tracking No.:	2461
Project No.:	0123WM013E
Test Date:	12/15/2022
Run No.:	4

Firebox Volume (ft^3):	1.731
Fuel Piece Length (in):	15.25
2x4 Crib Weight (lb):	4.2
4x4 Crib Weight (lb):	7.4

Total Fuel Weight (Dry Basis, lb):	9.7	
Fuel Density (lb/ft^3, Dry Basis):	27.87	OK
Loading Density (lb/ft^3, Wet Basis):	6.70	OK
2x4 Percentage:	36%	OK

Coal Bed Range (20-25%): **2.32 - 2.9**

Test Fuel Piece	Weight (lb)	Size	Readings (Dry Basis %)			Dry Weight (lb)
1	1.7	2"x 4"	20.5	21.4	22.8	1.40
2	1.7	2"x 4"	23.0	19.2	23.0	1.40
3	3.7	4"x 4"	19.9	20.3	21.1	3.07
4	3.3	4"x 4"	22.1	19.2	19.7	2.74

Spacer Readings (Dry Basis %)			
9.4	10.6	16.4	9.4
11.0	9.3	11.1	16.2
11.0	17.2	9.6	9.8

Technician Signature:_____

Wood Heater Test Data

u

Run: 4

Manufacturer: Kuma
Model: K-181
Tracking No.: 2461
Project No.: 0123WM013E
Test Date: 15-Dec-22
Beginning Clock Time: 12:11

Total Sampling Time: 175 min
Recording Interval: 1 min
Background Sample Volume: 37.573 cubic feet

Meter Box Y Factor: 1.004 (1) 1.002 (2) 1.016 (Amb)

Barometric Pressure:	Begin	Middle	End	Average	
	30.45	30.41	30.41	30.42	0

OMNI Equipment Numbers:

PM Control Modules: 335, 00336
Dilution Tunnel MW(dry): 29.00 lb/lb-mole
Dilution Tunnel MW(wet): 28.78 lb/lb-mole
Dilution Tunnel H2O: 2.00 percent
Dilution Tunnel Static: -0.320 "H2O
Tunnel Area: 0.19625 ft2
Pitot Tube Cp: 0.99

Avg. Tunnel Velocity: 18.53 ft/sec.
Initial Tunnel Flow: 210.2 scfm
Average Tunnel Flow: 208.8 scfm
Post-Test Leak Check (1): 0.000 cfm @ 14 in. Hg
Post-Test Leak Check (2): 0.000 cfm @ 11 in. Hg
Average Test Piece Fuel Moisture: 19.79 Dry Basis %

Technician Signature:_____

Export to PDF

Velocity Traverse Data

	Pt.1	Pt.2	Pt.3	Pt.4	Pt.5	Pt.6	Pt.7	Pt.8	Center	
Initial dP	0.070	0.088	0.086	0.064	0.062	0.084	0.094	0.068	0.102	"H2O
Temp:	87	87	86	86	86	81	80	78	82	°F

V_{strav} 18.45 ft/sec V_{scent} 21.27 ft/sec F_p 0.868

	Particulate Sampling Data														Fuel Weight (lb)		Temperature Data (°F)											Stack Gas Data		
Elapsed Time (min)	Gas Meter 1 (ft^3)	Gas Meter 2 (ft^3)	Sample Rate 1 (cfm)	Sample Rate 2 (cfm)	Orifice dH 1 ("H_2O)	Meter 1 Temp (°F)	Meter 1 Vacuum ("Hg)	Orifice dH 2 ("H_2O)	Meter 2 Temp (°F)	Meter 2 Vacuum ("Hg)	Dilution Tunnel (°F)	Dilution Tunnel Center dP	Pro. Rate 1	Pro. Rate 2	Scale Reading	Weight Change	Firebox Top	Firebox Bottom	Firebox Back	Firebox Left	Firebox Right	Avg. Stove Surface	Catalyst Exit	Stack	Filter 1	Dryer Exit 1	Filter 2	Dryer Exit 2	Ambient	Draft ("H_2O)	CO_2 (%)	CO (%)
0	0.000	0.000			1.11	72	2.66	1.03	72	2.2	99	0.100			11.6		329	305	362	447	464	381	500	317	67	47	67	47	68	-0.047	1.14	0.21
1	0.145	0.149	0.15	0.15	1.27	72	2.73	1.13	72	2.2	119	0.098	96	98	11.5	-0.1	332	306	368	444	463	383	408	310	68	43	68	44	68	-0.053	0.98	0.19
2	0.302	0.310	0.16	0.16	1.27	72	2.72	1.12	72	2.2	111	0.098	103	106	11.5	0	332	302	372	440	460	381	410	317	69	42	69	44	68	-0.054	1.6	0.25
3	0.461	0.471	0.16	0.16	1.27	72	2.72	1.11	72	2.2	97	0.100	102	103	11.5	0	335	297	374	437	458	380	591	348	69	42	69	44	68	-0.066	6.71	0.07
4	0.619	0.632	0.16	0.16	1.25	72	2.72	1.11	72	2.2	96	0.100	101	103	11.4	-0.1	343	292	375	433	454	379	685	385	69	42	69	44	68	-0.069	7.17	0.07
5	0.775	0.791	0.16	0.16	1.28	72	2.73	1.11	72	2.2	96	0.101	99	101	11.3	-0.1	352	289	375	428	451	379	702	406	69	42	69	44	68	-0.071	6.88	0.09
6	0.934	0.951	0.16	0.16	1.26	72	2.72	1.11	72	2.2	89	0.099	102	102	11.3	0	346	292	362	423	446	374	694	376	69	42	69	44	68	-0.064	7.67	0.06
7	1.092	1.112	0.16	0.16	1.27	72	2.72	1.10	72	2.2	87	0.100	100	102	11.3	0	341	293	352	419	442	369	675	357	69	42	69	44	68	-0.062	6.37	0.04
8	1.249	1.271	0.16	0.16	1.26	72	2.73	1.10	73	2.2	86	0.100	100	101	11.2	-0.1	337	293	344	415	438	365	665	345	69	42	69	44	68	-0.061	6.49	0.04
9	1.408	1.431	0.16	0.16	1.27	72	2.73	1.10	73	2.2	86	0.102	100	100	11.2	0	333	293	337	410	433	361	666	339	69	42	69	44	68	-0.061	6.5	0.04
10	1.568	1.591	0.16	0.16	1.28	73	2.73	1.10	73	2.2	85	0.101	101	101	11.1	-0.1	329	293	330	406	429	357	665	335	69	43	69	44	68	-0.061	6.36	0.04
11	1.726	1.750	0.16	0.16	1.27	73	2.74	1.10	73	2.2	85	0.099	100	101	11.1	0	325	292	324	401	424	353	662	331	69	43	69	44	67	-0.060	6.32	0.05
12	1.884	1.909	0.16	0.16	1.27	73	2.72	1.10	73	2.2	84	0.100	100	101	11.1	0	321	292	318	397	419	349	662	329	70	43	69	44	67	-0.060	6.36	0.05
13	2.043	2.070	0.16	0.16	1.27	73	2.72	1.09	73	2.2	84	0.102	100	101	11.0	-0.1	317	291	313	392	415	346	661	327	70	43	69	44	68	-0.060	6.46	0.05
14	2.202	2.228	0.16	0.16	1.27	73	2.72	1.09	73	2.2	84	0.101	100	99	11.0	0	314	290	307	388	410	342	664	326	70	43	69	44	68	-0.060	6.55	0.05
15	2.361	2.388	0.16	0.16	1.27	73	2.72	1.09	73	2.2	84	0.100	100	101	10.9	-0.1	312	290	302	384	406	339	667	325	70	43	69	44	68	-0.060	6.21	0.05
16	2.519	2.548	0.16	0.16	1.27	73	2.73	1.09	73	2.2	84	0.100	100	101	10.9	0	309	289	298	379	402	335	667	324	70	43	69	45	68	-0.060	6.16	0.06
17	2.678	2.707	0.16	0.16	1.27	73	2.73	1.09	74	2.2	84	0.103	99	99	10.9	0	307	288	293	375	398	332	663	323	70	44	69	45	67	-0.060	6.2	0.06
18	2.837	2.866	0.16	0.16	1.26	73	2.73	1.09	74	2.2	84	0.100	100	100	10.8	-0.1	304	288	288	371	394	329	660	322	70	44	69	45	67	-0.060	6.18	0.06
19	2.995	3.026	0.16	0.16	1.27	74	2.72	1.08	74	2.2	84	0.101	99	101	10.8	0	302	287	284	367	390	326	662	322	70	44	69	45	68	-0.060	6.34	0.06
20	3.154	3.185	0.16	0.16	1.27	74	2.73	1.09	74	2.2	84	0.101	100	100	10.7	-0.1	301	286	280	363	386	323	666	323	70	44	69	45	68	-0.060	6.6	0.06
21	3.314	3.344	0.16	0.16	1.27	74	2.74	1.09	74	2.2	84	0.100	101	100	10.7	0	302	284	276	359	382	321	707	328	70	44	69	45	67	-0.062	8.58	0.05
22	3.472	3.504	0.16	0.16	1.26	74	2.72	1.08	74	2.2	84	0.100	100	101	10.6	-0.1	307	283	272	356	379	319	765	338	70	44	69	45	68	-0.063	9.63	0.04
23	3.630	3.663	0.16	0.16	1.27	74	2.74	1.09	74	2.2	84	0.100	100	100	10.5	-0.1	313	282	268	352	375	318	781	345	70	45	69	46	68	-0.064	8.34	0.04
24	3.789	3.823	0.16	0.16	1.26	74	2.73	1.09	75	2.2	85	0.100	100	101	10.5	0	317	281	265	349	372	317	771	348	70	45	69	46	68	-0.064	7.69	0.05
25	3.949	3.982	0.16	0.16	1.27	74	2.72	1.08	75	2.2	85	0.100	101	100	10.4	-0.1	320	280	261	346	369	315	759	349	70	45	69	46	68	-0.064	7.54	0.06
26	4.107	4.141	0.16	0.16	1.26	75	2.74	1.09	75	2.2	84	0.099	100	101	10.4	0	321	278	258	343	366	313	756	350	70	45	69	46	68	-0.064	7.54	0.06
27	4.265	4.301	0.16	0.16	1.27	75	2.73	1.09	75	2.2	85	0.102	99	100	10.3	-0.1	323	277	255	340	363	312	759	351	70	45	69	46	69	-0.064	7.9	0.06
28	4.426	4.460	0.16	0.16	1.28	75	2.75	1.08	75	2.2	85	0.100	101	100	10.2	-0.1	325	276	252	337	360	310	767	354	70	45	69	46	68	-0.065	8.26	0.06
29	4.587	4.619	0.16	0.16	1.28	75	2.75	1.09	75	2.2	85	0.101	101	100	10.2	0	327	274	249	334	357	308	781	357	70	46	69	46	67	-0.065	8.97	0.05
30	4.747	4.779	0.16	0.16	1.27	75	2.74	1.08	75	2.2	85	0.101	100	100	10.1	-0.1	332	273	247	331	355	308	820	364	70	46	69	46	68	-0.066	11.41	0.05
31	4.906	4.938	0.16	0.16	1.28	75	2.75	1.08	75	2.2	86	0.101	100	100	10.0	-0.1	339	272	244	329	353	307	845	371	70	46	70	47	67	-0.067	10.36	0.06
32	5.065	5.097	0.16	0.16	1.28	75	2.74	1.08	76	2.2	86	0.101	100	100	9.9	-0.1	345	270	242	326	350	307	841	375	70	46	70	47	68	-0.067	9.73	0.06
33	5.226	5.257	0.16	0.16	1.28	75	2.76	1.08	76	2.2	86	0.101	101	100	9.9	0	352	269	240	324	349	307	860	379	70	46	70	47	67	-0.068	9.97	0.06
34	5.386	5.416	0.16	0.16	1.28	76	2.76	1.08	76	2.2	87	0.101	100	100	9.8	-0.1	361	268	238	322	347	307	889	386	70	46	70	47	68	-0.069	10.18	0.07
35	5.545	5.575	0.16	0.16	1.27	76	2.74	1.09	76	2.2	87	0.101	100	100	9.7	-0.1	368	267	236	320	345	307	897	392	70	46	70	47	68	-0.069	10.24	0.07

Wood Heater Test Data

u

Run: 4

Manufacturer: Kuma
Model: K-181
Tracking No.: 2461
Project No.: 0123WM013E
Test Date: 15-Dec-22
Beginning Clock Time: 12:11

Total Sampling Time: 175 min
Recording Interval: 1 min
Background Sample Volume: 37.573 cubic feet

Meter Box Y Factor: 1.004 (1) 1.002 (2) 1.016 (Amb)

Barometric Pressure:	Begin	Middle	End	Average
	30.45	30.41	30.41	30.42 0

OMNI Equipment Numbers:

PM Control Modules: 335, 00336
Dilution Tunnel MW(dry): 29.00 lb/lb-mole
Dilution Tunnel MW(wet): 28.78 lb/lb-mole
Dilution Tunnel H2O: 2.00 percent
Dilution Tunnel Static: -0.320 "H2O
Tunnel Area: 0.19625 ft2
Pitot Tube Cp: 0.99

Avg. Tunnel Velocity: 18.53 ft/sec.
Initial Tunnel Flow: 210.2 scfm
Average Tunnel Flow: 208.8 scfm
Post-Test Leak Check (1): 0.000 cfm @ 14 in. Hg
Post-Test Leak Check (2): 0.000 cfm @ 11 in. Hg
Average Test Piece Fuel Moisture: 19.79 Dry Basis %

Technician Signature:_____

Export to PDF

Velocity Traverse Data

	Pt.1	Pt.2	Pt.3	Pt.4	Pt.5	Pt.6	Pt.7	Pt.8	Center	
Initial dP	0.070	0.088	0.086	0.064	0.062	0.084	0.094	0.068	0.102	"H2O
Temp:	87	87	86	86	86	81	80	78	82	°F

V_{strav} 18.45 ft/sec V_{scent} 21.27 ft/sec F_p 0.868

	Particulate Sampling Data														Fuel Weight (lb)		Temperature Data (°F)												Stack Gas Data		
Elapsed Time (min)	Gas Meter 1 (ft^3)	Gas Meter 2 (ft^3)	Sample Rate 1 (cfm)	Sample Rate 2 (cfm)	Orifice dH 1 ("H_2O)	Meter 1 Temp (°F)	Meter 1 Vacuum ("Hg)	Orifice dH 2 ("H_2O)	Meter 2 Temp (°F)	Meter 2 Vacuum ("Hg)	Dilution Tunnel (°F)	Dilution Tunnel Center dP	Pro. Rate 1	Pro. Rate 2	Scale Reading	Weight Change	Firebox Top	Firebox Bottom	Firebox Back	Firebox Left	Firebox Right	Avg. Stove Surface	Catalyst Exit	Stack	Filter 1	Dryer Exit 1	Filter 2	Dryer Exit 2	Ambient	Draft ("H_2O)	CO_2 (%)	CO (%)
36	5.705	5.735	0.16	0.16	1.28	76	2.75	1.08	76	2.2	88	0.102	100	100	9.6	-0.1	374	265	235	319	344	307	909	398	70	47	70	47	68	-0.070	10.76	0.08
37	5.865	5.894	0.16	0.16	1.28	76	2.76	1.08	76	2.2	88	0.099	101	101	9.5	-0.1	381	264	233	317	343	308	937	404	70	47	70	48	67	-0.071	11.72	0.08
38	6.026	6.054	0.16	0.16	1.27	76	2.76	1.08	76	2.2	89	0.100	102	101	9.4	-0.1	392	263	233	315	341	309	996	418	70	47	70	48	68	-0.074	13.42	0.09
39	6.185	6.213	0.16	0.16	1.28	76	2.75	1.08	76	2.2	90	0.101	100	100	9.2	-0.2	408	261	232	314	341	311	1045	432	70	47	70	48	67	-0.075	16.57	0.53
40	6.345	6.372	0.16	0.16	1.28	76	2.76	1.08	77	2.2	91	0.100	101	101	9.1	-0.1	425	260	232	313	340	314	1057	442	71	47	70	48	67	-0.076	17.03	0.65
41	6.504	6.532	0.16	0.16	1.28	76	2.77	1.08	77	2.2	91	0.100	101	101	8.9	-0.2	443	259	232	312	339	317	1070	449	71	47	70	48	67	-0.077	17.5	0.65
42	6.665	6.691	0.16	0.16	1.28	76	2.75	1.08	77	2.2	92	0.100	102	101	8.8	-0.1	461	258	232	311	339	320	1079	457	71	48	70	48	68	-0.078	17.97	0.79
43	6.825	6.850	0.16	0.16	1.28	77	2.76	1.09	77	2.2	93	0.101	101	100	8.6	-0.2	478	256	233	311	339	323	1084	463	71	48	70	48	68	-0.078	18.52	0.95
44	6.984	7.011	0.16	0.16	1.28	77	2.76	1.08	77	2.2	93	0.101	100	101	8.5	-0.1	493	256	233	311	340	327	1084	468	71	48	70	48	68	-0.078	18.42	0.94
45	7.144	7.169	0.16	0.16	1.28	77	2.76	1.08	77	2.2	93	0.101	101	100	8.3	-0.2	507	254	234	311	341	329	1088	472	71	48	70	49	68	-0.079	18.52	0.84
46	7.304	7.328	0.16	0.16	1.29	77	2.76	1.08	77	2.2	94	0.101	101	100	8.2	-0.1	520	253	235	312	342	332	1091	474	71	48	70	49	68	-0.079	18.62	0.69
47	7.465	7.488	0.16	0.16	1.28	77	2.77	1.08	77	2.2	94	0.100	102	101	8.0	-0.2	531	252	237	313	343	335	1090	476	71	48	70	49	68	-0.079	18.66	0.6
48	7.625	7.647	0.16	0.16	1.27	77	2.77	1.08	77	2.2	94	0.100	101	101	7.9	-0.1	541	251	238	315	345	338	1091	478	71	48	70	49	68	-0.079	18.6	0.56
49	7.784	7.806	0.16	0.16	1.28	77	2.76	1.08	77	2.2	94	0.101	100	100	7.7	-0.2	549	250	239	317	347	340	1091	479	71	48	70	49	68	-0.079	18.48	0.53
50	7.944	7.967	0.16	0.16	1.28	77	2.77	1.08	77	2.2	95	0.101	101	102	7.6	-0.1	557	249	241	319	349	343	1092	480	71	49	71	49	68	-0.079	18.41	0.52
51	8.104	8.125	0.16	0.16	1.28	77	2.76	1.08	78	2.2	94	0.101	101	99	7.4	-0.2	563	248	242	321	352	345	1084	481	72	49	71	49	68	-0.079	18.28	0.35
52	8.265	8.285	0.16	0.16	1.28	77	2.77	1.08	78	2.2	94	0.102	101	100	7.3	-0.1	567	247	244	323	354	347	1074	480	72	49	71	50	68	-0.078	17.85	0.16
53	8.425	8.445	0.16	0.16	1.28	78	2.77	1.08	78	2.2	95	0.100	101	101	7.2	-0.1	569	247	245	325	357	349	1066	479	72	49	71	50	68	-0.078	17.72	0.16
54	8.585	8.604	0.16	0.16	1.28	78	2.77	1.08	78	2.2	95	0.101	101	100	7.1	-0.1	571	245	247	327	359	350	1058	478	72	49	71	50	68	-0.079	17.61	0.13
55	8.745	8.764	0.16	0.16	1.28	78	2.76	1.08	78	2.2	95	0.101	101	101	6.9	-0.2	571	245	248	329	362	351	1051	477	72	49	71	50	68	-0.078	17.52	0.14
56	8.905	8.924	0.16	0.16	1.28	78	2.76	1.08	78	2.2	95	0.100	101	101	6.8	-0.1	571	244	250	332	364	352	1045	477	72	49	71	50	68	-0.078	17.5	0.19
57	9.065	9.082	0.16	0.16	1.28	78	2.77	1.08	78	2.2	95	0.100	101	100	6.7	-0.1	571	244	252	335	367	354	1041	476	72	49	71	50	68	-0.079	17.5	0.25
58	9.225	9.243	0.16	0.16	1.27	78	2.77	1.09	78	2.2	95	0.100	101	102	6.5	-0.2	571	243	253	337	369	355	1041	476	72	50	71	50	68	-0.079	17.68	0.18
59	9.385	9.402	0.16	0.16	1.28	78	2.77	1.08	78	2.2	95	0.100	101	101	6.4	-0.1	572	242	255	340	372	356	1044	477	72	50	71	51	68	-0.079	17.62	0.32
60	9.545	9.561	0.16	0.16	1.28	78	2.76	1.09	78	2.2	95	0.100	101	101	6.3	-0.1	572	241	257	342	374	357	1040	477	72	50	71	51	68	-0.079	17.37	0.35
61	9.702	9.722	0.16	0.16	1.18	78	2.99	1.09	78	2.2	95	0.101	99	101	6.1	-0.2	573	241	258	345	377	359	1037	476	67	50	71	51	68	-0.078	17.26	0.36
62	9.862	9.881	0.16	0.16	1.28	78	3.15	1.08	78	2.2	95	0.102	100	100	6.0	-0.1	572	240	260	347	379	360	1031	475	68	50	71	51	68	-0.078	17.38	0.4
63	10.021	10.040	0.16	0.16	1.28	78	3.15	1.09	78	2.2	95	0.100	101	101	5.9	-0.1	572	240	263	350	382	361	1026	473	68	50	71	51	68	-0.078	17.35	0.44
64	10.182	10.201	0.16	0.16	1.28	78	3.16	1.08	78	2.2	95	0.101	101	101	5.7	-0.2	571	239	265	353	384	362	1026	472	68	50	71	51	68	-0.078	17.42	0.42
65	10.343	10.360	0.16	0.16	1.28	78	3.15	1.09	79	2.2	95	0.101	101	100	5.6	-0.1	570	239	267	355	387	364	1025	471	69	50	71	51	68	-0.078	17.55	0.43
66	10.503	10.519	0.16	0.16	1.27	78	3.16	1.08	79	2.2	95	0.100	101	100	5.5	-0.1	569	239	270	358	389	365	1025	471	69	50	71	51	68	-0.078	17.63	0.38
67	10.662	10.680	0.16	0.16	1.27	79	3.16	1.08	79	2.2	95	0.101	100	101	5.3	-0.2	569	239	272	361	391	366	1031	472	69	51	71	51	69	-0.078	17.86	0.42
68	10.822	10.838	0.16	0.16	1.27	79	3.16	1.08	79	2.2	95	0.101	101	99	5.2	-0.1	570	238	275	363	393	368	1037	472	69	51	71	51	68	-0.077	18.04	0.42
69	10.982	10.998	0.16	0.16	1.28	79	3.16	1.09	79	2.2	95	0.102	100	100	5.1	-0.1	570	238	278	366	395	369	1039	473	69	51	71	52	69	-0.077	18.06	0.44
70	11.143	11.159	0.16	0.16	1.28	79	3.15	1.08	79	2.2	95	0.102	101	101	5.0	-0.1	571	238	281	368	398	371	1040	473	70	51	71	52	69	-0.078	18.13	0.42
71	11.303	11.318	0.16	0.16	1.27	79	3.15	1.08	79	2.2	95	0.101	101	100	4.8	-0.2	571	238	285	371	400	373	1038	472	70	51	72	52	68	-0.078	18.1	0.37

Wood Heater Test Data

u

Run: 4

Manufacturer: Kuma
Model: K-181
Tracking No.: 2461
Project No.: 0123WM013E
Test Date: 15-Dec-22
Beginning Clock Time: 12:11

Total Sampling Time: 175 min
Recording Interval: 1 min
Background Sample Volume: 37.573 cubic feet

Meter Box Y Factor: 1.004 (1) 1.002 (2) 1.016 (Amb)

Barometric Pressure:	Begin	Middle	End	Average	
	30.45	30.41	30.41	30.42	0

OMNI Equipment Numbers:

PM Control Modules: 335, 00336
Dilution Tunnel MW(dry): 29.00 lb/lb-mole
Dilution Tunnel MW(wet): 28.78 lb/lb-mole
Dilution Tunnel H2O: 2.00 percent
Dilution Tunnel Static: -0.320 "H2O
Tunnel Area: 0.19625 ft2
Pitot Tube Cp: 0.99

Avg. Tunnel Velocity: 18.53 ft/sec.
Initial Tunnel Flow: 210.2 scfm
Average Tunnel Flow: 208.8 scfm
Post-Test Leak Check (1): 0.000 cfm @ 14 in. Hg
Post-Test Leak Check (2): 0.000 cfm @ 11 in. Hg
Average Test Piece Fuel Moisture: 19.79 Dry Basis %

Technician Signature:_____

Export to PDF

Velocity Traverse Data										
	Pt.1	Pt.2	Pt.3	Pt.4	Pt.5	Pt.6	Pt.7	Pt.8	Center	
Initial dP	0.070	0.088	0.086	0.064	0.062	0.084	0.094	0.068	0.102	"H2O
Temp:	87	87	86	86	86	81	80	78	82	°F

V_{strav} 18.45 ft/sec V_{scent} 21.27 ft/sec F_p 0.868

	Particulate Sampling Data														Fuel Weight (lb)		Temperature Data (°F)											Stack Gas Data		
Elapsed Time (min)	Gas Meter 1 (ft^3)	Gas Meter 2 (ft^3)	Sample Rate 1 (cfm)	Sample Rate 2 (cfm)	Orifice dH 1 ("H_2O)	Meter 1 Temp (°F)	Meter 1 Vacuum ("Hg)	Orifice dH 2 ("H_2O)	Meter 2 Temp (°F)	Meter 2 Vacuum ("Hg)	Dilution Tunnel (°F)	Dilution Tunnel Center dP	Pro. Rate 1	Pro. Rate 2	Scale Reading	Weight Change	Firebox Top	Firebox Bottom	Firebox Back	Firebox Left	Firebox Right	Avg. Stove Surface	Catalyst Exit	Stack	Filter 1	Dryer Exit 1	Filter 2	Dryer Exit 2	Ambient	Draft ("H_2O)	CO_2 (%)	CO (%)
72	11.463	11.478	0.16	0.16	1.28	79	3.16	1.09	79	2.2	95	0.101	101	101	4.7	-0.1	571	238	289	373	403	375	1033	472	70	51	71	52	68	-0.077	18.1	0.35
73	11.623	11.638	0.16	0.16	1.28	79	3.16	1.09	79	2.2	95	0.101	101	101	4.6	-0.1	571	237	293	375	405	376	1034	472	70	51	72	52	68	-0.078	18.07	0.28
74	11.783	11.797	0.16	0.16	1.28	79	3.16	1.09	79	2.2	95	0.101	101	100	4.5	-0.1	572	237	297	378	408	378	1037	472	70	51	72	52	68	-0.078	18.13	0.28
75	11.944	11.957	0.16	0.16	1.27	79	3.16	1.09	79	2.2	95	0.101	101	101	4.3	-0.2	573	238	301	380	411	381	1039	472	71	51	72	52	68	-0.077	18.06	0.25
76	12.104	12.118	0.16	0.16	1.27	79	3.17	1.08	79	2.2	95	0.101	101	101	4.2	-0.1	574	238	306	382	414	383	1041	471	71	51	72	52	68	-0.077	18.16	0.28
77	12.263	12.276	0.16	0.16	1.28	79	3.17	1.09	79	2.2	95	0.100	100	100	4.1	-0.1	575	238	310	385	417	385	1047	471	71	51	72	52	69	-0.077	18.25	0.19
78	12.423	12.437	0.16	0.16	1.28	79	3.16	1.08	79	2.2	96	0.102	100	101	4.0	-0.1	577	238	315	387	420	387	1053	471	71	51	72	52	68	-0.077	18.22	0.32
79	12.585	12.597	0.16	0.16	1.27	79	3.17	1.08	79	2.2	95	0.102	101	100	3.9	-0.1	579	238	320	389	423	390	1050	470	71	51	72	52	68	-0.077	18.33	0.24
80	12.745	12.756	0.16	0.16	1.27	79	3.15	1.09	79	2.2	95	0.102	100	100	3.8	-0.1	581	238	325	392	426	392	1042	468	71	51	72	52	68	-0.076	17.76	0.23
81	12.904	12.916	0.16	0.16	1.27	79	3.17	1.09	79	2.2	95	0.102	99	100	3.7	-0.1	580	239	330	394	429	394	1036	466	71	51	72	52	68	-0.076	17.47	0.15
82	13.064	13.076	0.16	0.16	1.28	79	3.15	1.08	79	2.2	95	0.101	101	101	3.6	-0.1	580	239	335	396	432	396	1029	464	71	51	72	52	68	-0.075	17.14	0.14
83	13.225	13.236	0.16	0.16	1.28	79	3.16	1.09	79	2.2	95	0.101	101	101	3.5	-0.1	579	239	340	399	435	398	1026	463	71	51	72	53	68	-0.076	16.88	0.1
84	13.386	13.396	0.16	0.16	1.28	79	3.17	1.09	80	2.2	94	0.100	102	101	3.4	-0.1	578	240	345	401	439	401	1025	462	72	52	72	53	69	-0.075	16.59	0.09
85	13.546	13.556	0.16	0.16	1.27	79	3.15	1.09	80	2.2	94	0.100	101	101	3.3	-0.1	577	240	350	403	441	402	1023	461	72	52	72	53	69	-0.075	16.1	0.08
86	13.706	13.716	0.16	0.16	1.27	80	3.15	1.09	80	2.2	94	0.101	100	100	3.2	-0.1	576	241	355	406	444	404	1022	460	72	52	72	53	68	-0.075	15.77	0.08
87	13.866	13.876	0.16	0.16	1.28	80	3.15	1.08	80	2.2	94	0.101	100	100	3.1	-0.1	575	241	360	408	447	406	1030	458	72	52	72	53	69	-0.075	15.39	0.09
88	14.026	14.036	0.16	0.16	1.28	80	3.15	1.08	80	2.2	94	0.102	100	100	3.0	-0.1	572	242	366	411	450	408	1027	457	72	52	72	53	69	-0.075	14.83	0.09
89	14.188	14.196	0.16	0.16	1.27	80	3.14	1.08	80	2.2	94	0.101	101	100	3.0	0	568	243	372	413	452	410	1013	455	72	52	72	53	68	-0.074	14.54	0.09
90	14.348	14.356	0.16	0.16	1.27	80	3.16	1.09	80	2.2	93	0.100	101	101	2.9	-0.1	562	243	378	416	455	411	996	451	72	52	72	53	69	-0.074	14.33	0.08
91	14.508	14.517	0.16	0.16	1.27	80	3.17	1.09	80	2.2	93	0.102	100	100	2.8	-0.1	554	244	383	419	457	411	977	446	72	52	72	53	68	-0.073	14.03	0.07
92	14.668	14.676	0.16	0.16	1.28	80	3.15	1.09	80	2.2	93	0.101	100	100	2.8	0	545	244	388	422	459	412	948	441	72	52	72	53	68	-0.072	13.69	0.07
93	14.828	14.836	0.16	0.16	1.28	80	3.16	1.09	80	2.2	92	0.102	100	100	2.7	-0.1	536	246	394	425	461	412	927	435	72	52	72	53	68	-0.072	13.3	0.06
94	14.990	14.997	0.16	0.16	1.28	80	3.15	1.08	80	2.2	92	0.101	101	101	2.6	-0.1	527	246	398	427	463	412	914	431	72	52	72	53	68	-0.071	13.22	0.06
95	15.150	15.157	0.16	0.16	1.27	80	3.15	1.08	80	2.2	92	0.104	99	99	2.6	0	519	247	402	430	464	412	907	427	72	52	72	53	68	-0.071	13.1	0.06
96	15.310	15.316	0.16	0.16	1.28	80	3.15	1.09	80	2.2	92	0.100	101	100	2.5	-0.1	512	248	406	432	466	413	902	423	72	52	72	53	68	-0.070	13.06	0.06
97	15.470	15.477	0.16	0.16	1.28	80	3.15	1.09	80	2.2	91	0.103	99	100	2.5	0	506	249	409	434	467	413	896	419	72	52	72	53	69	-0.070	12.98	0.06
98	15.630	15.637	0.16	0.16	1.28	80	3.15	1.08	80	2.2	91	0.101	100	100	2.4	-0.1	499	250	412	436	468	413	887	417	72	52	72	53	69	-0.069	12.74	0.05
99	15.792	15.797	0.16	0.16	1.28	80	3.16	1.09	80	2.2	91	0.100	102	101	2.3	-0.1	493	251	415	438	469	413	880	413	72	52	72	53	68	-0.069	12.74	0.05
100	15.952	15.958	0.16	0.16	1.27	80	3.16	1.09	80	2.2	91	0.101	100	101	2.3	0	487	252	418	439	469	413	874	411	72	52	72	53	68	-0.069	12.8	0.05
101	16.112	16.118	0.16	0.16	1.28	80	3.16	1.08	80	2.2	91	0.107	97	97	2.2	-0.1	482	253	420	441	470	413	867	408	72	52	72	53	68	-0.068	12.75	0.05
102	16.272	16.278	0.16	0.16	1.28	80	3.15	1.09	80	2.2	90	0.101	100	100	2.2	0	477	255	422	442	471	413	861	405	72	52	72	53	68	-0.068	12.78	0.04
103	16.433	16.438	0.16	0.16	1.28	80	3.15	1.09	80	2.2	90	0.102	100	99	2.1	-0.1	472	256	425	444	472	414	856	402	72	52	72	53	68	-0.068	12.82	0.04
104	16.595	16.599	0.16	0.16	1.28	80	3.16	1.09	80	2.2	90	0.102	101	100	2.1	0	468	257	427	446	472	414	849	400	72	52	72	53	68	-0.068	12.66	0.04
105	16.755	16.758	0.16	0.16	1.27	80	3.15	1.09	80	2.2	90	0.102	99	99	2.0	-0.1	464	258	429	448	473	414	841	398	72	52	72	53	68	-0.067	11.75	0.04
106	16.915	16.919	0.16	0.16	1.28	80	3.14	1.09	80	2.2	90	0.103	99	100	2.0	0	460	259	430	449	473	414	839	396	72	52	72	53	68	-0.067	11.42	0.05
107	17.075	17.079	0.16	0.16	1.28	80	3.16	1.09	80	2.2	89	0.101	100	100	2.0	0	456	260	431	451	473	414	831	393	72	52	72	53	68	-0.067	10.98	0.05

Wood Heater Test Data

u

Run: 4

Manufacturer: Kuma
Model: K-181
Tracking No.: 2461
Project No.: 0123WM013E
Test Date: 15-Dec-22
Beginning Clock Time: 12:11

Total Sampling Time: 175 min
Recording Interval: 1 min
Background Sample Volume: 37.573 cubic feet

Meter Box Y Factor: 1.004 (1) 1.002 (2) 1.016 (Amb)

Barometric Pressure:

Begin	Middle	End	Average
30.45	30.41	30.41	30.42

0

OMNI Equipment Numbers:

PM Control Modules: 335, 00336
Dilution Tunnel MW(dry): 29.00 lb/lb-mole
Dilution Tunnel MW(wet): 28.78 lb/lb-mole
Dilution Tunnel H2O: 2.00 percent
Dilution Tunnel Static: -0.320 "H2O
Tunnel Area: 0.19625 ft2
Pitot Tube Cp: 0.99

Avg. Tunnel Velocity: 18.53 ft/sec.
Initial Tunnel Flow: 210.2 scfm
Average Tunnel Flow: 208.8 scfm
Post-Test Leak Check (1): 0.000 cfm @ 14 in. Hg
Post-Test Leak Check (2): 0.000 cfm @ 11 in. Hg
Average Test Piece Fuel Moisture: 19.79 Dry Basis %

Technician Signature:_____

Export to PDF

Velocity Traverse Data

	Pt.1	Pt.2	Pt.3	Pt.4	Pt.5	Pt.6	Pt.7	Pt.8	Center	
Initial dP	0.070	0.088	0.086	0.064	0.062	0.084	0.094	0.068	0.102	"H2O
Temp:	87	87	86	86	86	81	80	78	82	°F

V_{strav} 18.45 ft/sec V_{scent} 21.27 ft/sec F_p 0.868

	Particulate Sampling Data														Fuel Weight (lb)		Temperature Data (°F)												Stack Gas Data		
Elapsed Time (min)	Gas Meter 1 (ft^3)	Gas Meter 2 (ft^3)	Sample Rate 1 (cfm)	Sample Rate 2 (cfm)	Orifice dH 1 ("H_2O)	Meter 1 Temp (°F)	Meter 1 Vacuum ("Hg)	Orifice dH 2 ("H_2O)	Meter 2 Temp (°F)	Meter 2 Vacuum ("Hg)	Dilution Tunnel (°F)	Dilution Tunnel Center dP	Pro. Rate 1	Pro. Rate 2	Scale Reading	Weight Change	Firebox Top	Firebox Bottom	Firebox Back	Firebox Left	Firebox Right	Avg. Stove Surface	Catalyst Exit	Stack	Filter 1	Dryer Exit 1	Filter 2	Dryer Exit 2	Ambient	Draft ("H_2O)	CO_2 (%)	CO (%)
108	17.236	17.239	0.16	0.16	1.28	80	3.15	1.09	80	2.2	89	0.102	100	99	1.9	-0.1	452	262	432	452	473	414	826	392	72	52	72	53	68	-0.066	10.85	0.05
109	17.397	17.400	0.16	0.16	1.28	80	3.15	1.09	80	2.2	89	0.102	100	100	1.9	0	448	262	432	454	473	414	821	389	72	52	72	53	68	-0.066	10.68	0.05
110	17.558	17.561	0.16	0.16	1.28	80	3.14	1.09	80	2.2	89	0.103	99	100	1.8	-0.1	444	263	432	455	473	413	817	387	72	52	71	53	68	-0.066	10.74	0.05
111	17.719	17.720	0.16	0.16	1.28	80	3.16	1.09	80	2.2	89	0.102	100	99	1.8	0	440	265	431	457	472	413	818	386	72	52	71	53	68	-0.066	10.8	0.05
112	17.879	17.881	0.16	0.16	1.28	80	3.15	1.08	80	2.2	88	0.103	99	99	1.8	0	437	266	431	459	471	413	819	385	72	52	71	53	69	-0.066	10.99	0.05
113	18.039	18.042	0.16	0.16	1.28	80	3.15	1.08	80	2.2	88	0.104	98	99	1.7	-0.1	434	267	430	460	471	412	820	384	72	52	71	53	68	-0.065	11.08	0.05
114	18.200	18.201	0.16	0.16	1.28	80	3.16	1.08	80	2.2	88	0.103	99	98	1.7	0	432	268	430	462	470	412	826	383	72	52	71	53	68	-0.065	11.21	0.05
115	18.361	18.361	0.16	0.16	1.28	80	3.16	1.09	80	2.2	88	0.101	100	100	1.7	0	431	269	429	463	469	412	829	383	72	52	71	53	69	-0.065	11.4	0.05
116	18.522	18.522	0.16	0.16	1.27	80	3.16	1.09	80	2.2	88	0.102	100	100	1.6	-0.1	430	270	428	464	468	412	830	383	72	52	71	53	68	-0.065	11.61	0.04
117	18.682	18.683	0.16	0.16	1.28	80	3.15	1.09	80	2.2	88	0.102	99	100	1.6	0	429	271	428	465	466	412	829	382	72	52	71	53	69	-0.065	11.8	0.04
118	18.842	18.842	0.16	0.16	1.28	80	3.16	1.09	80	2.2	88	0.103	99	98	1.5	-0.1	428	272	427	467	466	412	829	382	72	52	71	53	68	-0.065	12.04	0.04
119	19.003	19.003	0.16	0.16	1.28	80	3.15	1.09	80	2.2	88	0.101	100	100	1.5	0	427	274	426	467	464	412	826	381	72	52	71	53	68	-0.064	12.26	0.03
120	19.164	19.164	0.16	0.16	1.28	80	3.14	1.08	80	2.2	88	0.102	100	100	1.5	0	427	275	425	468	464	412	826	380	72	52	71	53	68	-0.065	12.43	0.03
121	19.324	19.323	0.16	0.16	1.27	80	3.15	1.09	80	2.2	88	0.102	99	99	1.4	-0.1	427	275	425	469	463	412	824	379	72	52	71	53	68	-0.064	12.58	0.03
122	19.485	19.484	0.16	0.16	1.28	80	3.15	1.09	80	2.2	87	0.102	100	100	1.4	0	427	276	424	470	462	412	822	379	72	52	71	53	68	-0.064	12.62	0.03
123	19.645	19.644	0.16	0.16	1.27	80	3.16	1.08	80	2.2	88	0.101	100	100	1.3	-0.1	428	277	423	471	462	412	827	379	72	52	71	53	69	-0.065	12.28	0.03
124	19.805	19.804	0.16	0.16	1.28	80	3.15	1.09	80	2.2	88	0.102	99	99	1.3	0	428	277	423	472	462	412	828	379	72	52	71	53	68	-0.065	12.13	0.04
125	19.967	19.964	0.16	0.16	1.28	80	3.16	1.09	80	2.2	88	0.102	100	99	1.3	0	429	278	423	472	462	413	826	379	72	52	71	53	68	-0.064	11.93	0.03
126	20.127	20.125	0.16	0.16	1.27	80	3.14	1.09	80	2.2	87	0.103	99	99	1.2	-0.1	429	279	422	473	461	413	832	378	72	52	71	53	69	-0.065	11.84	0.04
127	20.287	20.285	0.16	0.16	1.28	80	3.14	1.09	80	2.2	88	0.100	100	100	1.2	0	431	280	422	473	462	414	841	380	72	52	71	53	68	-0.065	11.52	0.05
128	20.448	20.445	0.16	0.16	1.28	80	3.16	1.09	80	2.2	87	0.102	100	99	1.2	0	431	281	421	473	462	414	843	380	72	52	71	53	68	-0.065	11.17	0.05
129	20.609	20.607	0.16	0.16	1.28	80	3.16	1.09	80	2.2	87	0.102	100	100	1.1	-0.1	432	281	421	474	462	414	842	380	72	52	71	53	68	-0.065	10.81	0.06
130	20.770	20.766	0.16	0.16	1.27	80	3.16	1.09	80	2.2	87	0.103	99	98	1.1	0	430	282	420	474	462	414	826	379	72	52	71	53	68	-0.064	10.38	0.06
131	20.931	20.926	0.16	0.16	1.27	80	3.15	1.09	80	2.2	87	0.101	100	100	1.1	0	427	283	420	474	462	413	813	376	72	52	71	53	68	-0.063	9.97	0.06
132	21.091	21.088	0.16	0.16	1.28	80	3.15	1.09	80	2.2	87	0.103	99	100	1.1	0	424	283	419	473	461	412	805	373	72	51	71	53	68	-0.063	9.99	0.06
133	21.251	21.247	0.16	0.16	1.27	80	3.15	1.08	80	2.2	87	0.102	99	99	1.0	-0.1	420	284	418	473	461	411	795	371	72	51	71	53	68	-0.063	9.93	0.06
134	21.412	21.407	0.16	0.16	1.27	80	3.15	1.09	80	2.2	87	0.102	100	99	1.0	0	415	285	418	473	461	410	782	368	72	51	71	53	68	-0.062	9.77	0.05
135	21.573	21.568	0.16	0.16	1.27	80	3.14	1.08	80	2.2	87	0.104	99	99	1.0	0	410	285	417	473	460	409	767	364	72	51	71	53	68	-0.062	9.63	0.05
136	21.734	21.729	0.16	0.16	1.28	80	3.14	1.09	81	2.2	87	0.102	100	100	1.0	0	405	286	417	472	460	408	753	360	72	51	71	53	69	-0.061	9.47	0.05
137	21.894	21.889	0.16	0.16	1.27	80	3.14	1.09	81	2.2	86	0.100	100	100	0.9	-0.1	400	286	416	471	459	406	742	357	71	51	71	53	68	-0.061	9.47	0.05
138	22.055	22.049	0.16	0.16	1.28	80	3.16	1.09	81	2.2	86	0.101	100	99	0.9	0	394	287	416	471	458	405	736	354	71	51	71	53	69	-0.061	9.53	0.05
139	22.215	22.210	0.16	0.16	1.28	80	3.14	1.09	81	2.2	86	0.102	99	100	0.9	0	389	288	416	470	458	404	732	351	71	51	71	53	68	-0.060	9.5	0.05
140	22.376	22.370	0.16	0.16	1.28	80	3.16	1.08	81	2.2	86	0.102	100	99	0.9	0	385	289	416	469	457	403	729	349	71	51	71	53	69	-0.060	9.49	0.05
141	22.538	22.530	0.16	0.16	1.28	80	3.15	1.09	81	2.2	86	0.102	100	99	0.8	-0.1	381	289	416	468	456	402	726	347	71	51	71	53	68	-0.060	9.3	0.05
142	22.698	22.691	0.16	0.16	1.27	80	3.14	1.09	81	2.2	85	0.102	99	99	0.8	0	377	290	416	467	454	401	719	344	71	51	71	53	68	-0.059	9.32	0.04
143	22.859	22.851	0.16	0.16	1.28	80	3.14	1.09	81	2.2	85	0.103	99	98	0.8	0	373	290	416	466	453	400	712	342	71	51	71	53	68	-0.059	9.38	0.04

Wood Heater Test Data

u

Run: 4

Manufacturer: Kuma
Model: K-181
Tracking No.: 2461
Project No.: 0123WM013E
Test Date: 15-Dec-22
Beginning Clock Time: 12:11

Total Sampling Time: 175 min
Recording Interval: 1 min
Background Sample Volume: 37.573 cubic feet

Meter Box Y Factor: 1.004 (1) 1.002 (2) 1.016 (Amb)

Barometric Pressure:

Begin	Middle	End	Average	
30.45	30.41	30.41	30.42	0

OMNI Equipment Numbers:

PM Control Modules: 335, 00336
Dilution Tunnel MW(dry): 29.00 lb/lb-mole
Dilution Tunnel MW(wet): 28.78 lb/lb-mole
Dilution Tunnel H2O: 2.00 percent
Dilution Tunnel Static: -0.320 "H2O
Tunnel Area: 0.19625 ft2
Pitot Tube Cp: 0.99

Avg. Tunnel Velocity: 18.53 ft/sec.
Initial Tunnel Flow: 210.2 scfm
Average Tunnel Flow: 208.8 scfm
Post-Test Leak Check (1): 0.000 cfm @ 14 in. Hg
Post-Test Leak Check (2): 0.000 cfm @ 11 in. Hg
Average Test Piece Fuel Moisture: 19.79 Dry Basis %

Technician Signature:_____

Export to PDF

Velocity Traverse Data

	Pt.1	Pt.2	Pt.3	Pt.4	Pt.5	Pt.6	Pt.7	Pt.8	Center	
Initial dP	0.070	0.088	0.086	0.064	0.062	0.084	0.094	0.068	0.102	"H2O
Temp:	87	87	86	86	86	81	80	78	82	°F

V_{strav} 18.45 ft/sec V_{scent} 21.27 ft/sec F_p 0.868

	Particulate Sampling Data														Fuel Weight (lb)		Temperature Data (°F)											Stack Gas Data		
Elapsed Time (min)	Gas Meter 1 (ft^3)	Gas Meter 2 (ft^3)	Sample Rate 1 (cfm)	Sample Rate 2 (cfm)	Orifice dH 1 ("H_2O)	Meter 1 Temp (°F)	Meter 1 Vacuum ("Hg)	Orifice dH 2 ("H_2O)	Meter 2 Temp (°F)	Meter 2 Vacuum ("Hg)	Dilution Tunnel (°F)	Dilution Tunnel Center dP	Pro. Rate 1	Pro. Rate 2	Scale Reading	Weight Change	Firebox Top	Firebox Bottom	Firebox Back	Firebox Left	Firebox Right	Avg. Stove Surface	Catalyst Exit	Stack	Filter 1	Dryer Exit 1	Filter 2	Dryer Exit 2	Ambient	Draft ("H_2O)	CO_2 (%)	CO (%)
144	23.019	23.012	0.16	0.16	1.28	80	3.14	1.09	81	2.2	85	0.103	98	99	0.8	0	369	291	415	466	452	399	706	340	71	51	71	53	68	-0.059	9.43	0.04
145	23.180	23.173	0.16	0.16	1.28	80	3.16	1.09	81	2.2	85	0.105	98	98	0.7	-0.1	365	291	415	465	451	397	701	337	71	51	71	53	68	-0.058	9.24	0.04
146	23.341	23.333	0.16	0.16	1.28	80	3.14	1.08	81	2.2	85	0.101	100	99	0.7	0	361	291	415	464	450	396	700	335	71	51	71	53	68	-0.058	9.27	0.04
147	23.502	23.493	0.16	0.16	1.28	80	3.15	1.09	81	2.2	85	0.102	100	99	0.7	0	358	292	415	463	449	395	702	334	71	51	71	53	68	-0.058	9.15	0.05
148	23.662	23.654	0.16	0.16	1.27	80	3.14	1.09	81	2.2	85	0.102	99	99	0.7	0	356	292	415	462	448	395	703	334	71	51	71	53	68	-0.058	9.22	0.05
149	23.823	23.814	0.16	0.16	1.28	80	3.15	1.08	81	2.2	85	0.102	100	99	0.7	0	353	293	415	461	446	394	701	333	71	51	71	53	68	-0.058	9.32	0.05
150	23.984	23.974	0.16	0.16	1.28	80	3.16	1.09	81	2.2	85	0.103	99	98	0.6	-0.1	351	293	415	460	445	393	700	331	71	51	71	53	68	-0.058	9.32	0.04
151	24.145	24.135	0.16	0.16	1.28	80	3.16	1.09	81	2.2	85	0.103	99	99	0.6	0	349	294	414	460	444	392	699	331	71	51	71	53	69	-0.058	9.35	0.05
152	24.306	24.296	0.16	0.16	1.28	80	3.16	1.08	81	2.2	85	0.100	101	100	0.6	0	347	294	414	459	443	391	699	330	71	51	71	53	68	-0.058	9.32	0.05
153	24.466	24.456	0.16	0.16	1.27	80	3.14	1.09	81	2.2	84	0.103	98	98	0.6	0	345	295	415	459	441	391	701	329	71	51	71	53	69	-0.057	9.23	0.05
154	24.627	24.616	0.16	0.16	1.28	80	3.16	1.09	81	2.2	84	0.101	100	99	0.6	0	344	295	414	458	440	390	702	329	71	51	71	53	68	-0.058	9.28	0.05
155	24.787	24.777	0.16	0.16	1.28	80	3.16	1.09	81	2.2	84	0.103	98	99	0.5	-0.1	343	296	414	457	439	390	703	329	71	51	71	53	69	-0.058	9.32	0.05
156	24.948	24.937	0.16	0.16	1.28	80	3.14	1.09	81	2.2	84	0.103	99	98	0.5	0	342	296	415	456	437	389	704	329	71	51	71	53	68	-0.057	9.32	0.05
157	25.110	25.097	0.16	0.16	1.27	80	3.15	1.09	81	2.2	84	0.101	101	99	0.5	0	341	297	415	456	436	389	706	329	71	51	71	53	68	-0.057	9.3	0.05
158	25.270	25.259	0.16	0.16	1.27	80	3.15	1.09	81	2.2	84	0.101	99	100	0.5	0	340	297	416	455	435	389	706	329	71	51	71	53	68	-0.058	9.27	0.05
159	25.431	25.418	0.16	0.16	1.27	80	3.14	1.09	81	2.2	84	0.101	100	99	0.5	0	339	297	416	455	434	388	706	328	71	51	71	53	68	-0.057	9.32	0.05
160	25.591	25.579	0.16	0.16	1.28	80	3.16	1.09	81	2.2	84	0.102	99	99	0.4	-0.1	338	298	416	454	432	388	706	328	71	51	71	53	68	-0.057	9.31	0.05
161	25.752	25.740	0.16	0.16	1.28	80	3.14	1.09	81	2.2	84	0.102	99	99	0.4	0	338	298	417	454	431	388	707	328	71	51	71	53	68	-0.057	9.3	0.05
162	25.913	25.900	0.16	0.16	1.28	80	3.14	1.09	81	2.2	84	0.101	100	99	0.4	0	337	298	417	453	430	387	708	328	71	51	70	53	68	-0.057	9.3	0.05
163	26.074	26.060	0.16	0.16	1.28	80	3.16	1.09	81	2.2	84	0.104	98	98	0.4	0	337	298	417	452	429	387	708	328	71	51	71	53	68	-0.057	9.32	0.06
164	26.235	26.221	0.16	0.16	1.27	80	3.16	1.09	81	2.2	84	0.102	99	99	0.3	-0.1	336	299	418	452	428	387	707	328	71	51	71	53	68	-0.057	9.3	0.06
165	26.395	26.382	0.16	0.16	1.27	80	3.14	1.08	81	2.2	84	0.102	99	99	0.3	0	336	299	418	451	426	386	705	327	71	51	71	53	68	-0.057	9.23	0.06
166	26.556	26.542	0.16	0.16	1.28	80	3.15	1.09	81	2.2	84	0.103	99	98	0.3	0	335	299	419	450	426	386	700	327	71	51	71	53	69	-0.057	9.21	0.05
167	26.717	26.702	0.16	0.16	1.28	80	3.15	1.09	81	2.2	84	0.102	99	99	0.3	0	334	300	419	450	424	385	697	326	71	51	71	53	68	-0.057	9.09	0.05
168	26.879	26.863	0.16	0.16	1.28	80	3.16	1.09	81	2.2	84	0.104	99	98	0.3	0	333	300	419	449	423	385	696	325	71	51	70	53	68	-0.057	9.01	0.06
169	27.039	27.023	0.16	0.16	1.27	80	3.15	1.09	81	2.2	84	0.101	99	99	0.2	-0.1	332	300	419	448	422	384	697	325	71	51	70	53	68	-0.057	8.95	0.06
170	27.200	27.184	0.16	0.16	1.27	80	3.14	1.09	81	2.2	84	0.104	98	98	0.2	0	331	300	419	448	421	384	696	324	71	51	70	53	68	-0.057	9.05	0.06
171	27.360	27.345	0.16	0.16	1.28	80	3.15	1.09	81	2.2	84	0.103	98	99	0.2	0	330	300	419	447	420	383	694	324	71	51	70	53	68	-0.057	9.02	0.06
172	27.521	27.505	0.16	0.16	1.28	80	3.15	1.09	81	2.2	84	0.104	98	98	0.2	0	330	301	419	446	419	383	693	324	71	51	70	52	69	-0.057	9.04	0.06
173	27.682	27.665	0.16	0.16	1.27	80	3.16	1.09	81	2.2	84	0.103	99	98	0.2	0	329	301	419	445	418	382	694	324	71	51	70	52	68	-0.057	9.01	0.06
174	27.843	27.827	0.16	0.16	1.28	80	3.15	1.09	81	2.2	84	0.102	99	100	0.1	-0.1	329	302	419	445	417	382	696	324	71	51	70	52	68	-0.057	8.94	0.06
175	28.004	27.987	0.16	0.16	1.28	80	3.14	1.08	81	2.2	84	0.101	100	99	0.0	-0.1	328	302	418	444	416	382	698	324	71	51	70	52	68	-0.057	8.96	0.06
Avg/Tot	28.004	27.987	0.16	0.16	1.27	78		1.09	78		89	0.101	100	100								0.2				49	71	51	68	-0.067		

Wood Heater Lab Data - ASTM E2780 / ASTM E2515

Manufacturer:	Kuma	Equipment Numbers:	
Model:	K-181		
Tracking No.:	2461		
Project No.:	0123WM013E		
Run #:	4		
Date:	12/15/22		

TRAIN 1 (First Hour emissions)

Sample Component	Reagent	Filter, Probe or Dish #	Weights		
			Final, mg	Tare, mg	Particulate, mg
B. Front filter catch	Filter	E735	118.0	116.4	1.6
C. Rear filter catch	Filter	E736	116.4	116.9	-0.5
D. Probe catch*	Probe	2	115012.3	115012.2	0.1
E. Filter seals catch*	Seals	S446	4054.6	4053.5	1.1

Sub-Total

Total Particulate, mg:	2.3

TRAIN 1 (Post First Hour Change-out)

Sample Component	Reagent	Filter, Probe or Dish #	Weights		
			Final, mg	Tare, mg	Particulate, mg
B. Front filter catch	Filter	E738	117.1	117.1	0.0
C. Rear filter catch	Filter	E739	115.7	115.9	-0.2
D. Probe catch*	Probe	3	116011.2	116011.1	0.1
E. Filter seals catch*	Seals	S447	3269.4	3268.8	0.6

Sub-Total

Total Particulate, mg:	0.5

Train 1 Aggregate

Total Particulate, mg:	**2.8**

TRAIN 2

Sample Component	Reagent	Filter, Probe or Dish #	Weights		
			Final, mg	Tare, mg	Particulate, mg
A. Front filter catch	Filter	E740	119.1	117.5	1.6
B. Rear filter catch	Filter	E757	115.7	115.6	0.1
C. Probe catch*	Probe	15	114340.4	114340.3	0.1
D. Filter seals catch*	Seals	S448	3301.5	3300.8	0.7

Total Particulate, mg:	**2.5**

AMBIENT

Sample Component	Reagent	Filter # or Probe #	Weights		
			Final, mg	Tare, mg	Particulate, mg
A. Front filter catch*	Filter	E759	116.7	116.7	0.0

Total Particulate, mg:	**0.0**

*Particulate catch that results in a negative number, is assumed to be zero for probes and seals, negative numbers for filters are assumed to be part of the seal weight.

Component	Equations:
A. Front filter catch	Final (mg) - Tare (mg) = Particulate, mg
B. Rear filter catch	Final (mg) - Tare (mg) = Particulate, mg
C. Probe catch	Final (mg) - Tare (mg) = Particulate, mg

Technician Signature:_____

Wood Heater Test Results - ASTM E2780 / ASTM E2515

Manufacturer:	Kuma
Model:	K-181
Project No.:	0123WM013E
Tracking No.:	2461
Run:	4
Test Date:	12/15/22

Burn Rate	**1.51**	**kg/hr dry**
Average Tunnel Temperature	89	degrees Fahrenheit
Average Gas Velocity in Dilution Tunnel - vs	18.53	feet/second
Average Gas Flow Rate in Dilution Tunnel - Qsd	12527.0	dscf/hour
Average Delta p	0.101	inches H20
Total Time of Test	175	minutes

	AMBIENT	SAMPLE TRAIN 1	SAMPLE TRAIN 2	FIRST HOUR FILTER (TRAIN 1)
Total Sample Volume - Vm	37.573 cubic feet	28.004 cubic feet	27.987 cubic feet	9.545 cubic feet
Average Gas Meter Temperature	68 degrees Fahrenheit	78 degrees Fahrenheit	78 degrees Fahrenheit	75 degrees Fahrenheit
Total Sample Volume (Standard Conditions) - Vmstd	38.795 dscf	28.129 dscf	28.026 dscf	9.643 dscf
Total Particulates - m_n	0 mg	2.8 mg	2.5 mg	2.3 mg
Particulate Concentration (dry-standard) - C_r/C_s	0.000000 grams/dscf	0.00010 grams/dscf	0.00009 grams/dscf	0.00024 grams/dscf
Total Particulate Emissions - E_T	0.00 grams	3.64 grams	3.26 grams	2.99 grams
Particulate Emission Rate	0.00 grams/hour	1.25 grams/hour	1.12 grams/hour	2.99 grams/hour
Emissions Factor		0.83 g/kg	0.74 g/kg	1.49 g/kg
Difference from Average Total Particulate Emissions		0.19 grams	0.19 grams	

Dual Train Comparison Results Are Acceptable

FINAL AVERAGE RESULTS

Complete Test Run		
Total Particulate Emissions - E_T	3.45	grams
Particulate Emission Rate	**1.18**	**grams/hour**
Emissions Factor	0.79	grams/kg
First Hour Emissions		
Total Particulate Emissions - E_T	2.99	grams
Particulate Emission Rate	2.99	grams/hour
Emissions Factor	1.49	grams/kg
7.5% of Average Total Particulate Emissions	0.26	grams

QUALITY CHECKS

Filter Temps < 90 °F	OK
Filter Face Velocity (47 mm)	OK
Dryer Exit Temp < 80F	OK
Leakage Rate	OK
Ambient Temp (55-90°F)	OK
Negative Probe Weight Eval.	OK
Pro-Rate Variation	OK
Stove Surface ΔT	OK
Train Precesion 7.5%	5.48
Train Precision 0.5g/kg	0.09

Technician Signature:_____

Wood Heater Lab Data - ASTM E2780 / ASTM E2515

Manufacturer:	Kuma	Equipment Numbers:	
Model:	K-181		
Tracking No.:	2461		
Project No.:	0123WM013E		
Run #:	4		
Date:	12/15/22		

Uncorrected

TRAIN 1 (First Hour emissions)

Sample Component	Reagent	Filter, Probe or Dish #	Weights		
			Final, mg	Tare, mg	Particulate, mg
B. Front filter catch	Filter	E735	118.0	116.4	1.6
C. Rear filter catch	Filter	E736	116.4	116.9	0.0
D. Probe catch*	Probe	2	115012.3	115012.2	0.1
E. Filter seals catch*	Seals	S446	4054.6	4053.5	1.1

Sub-Total | Total Particulate, mg: | 2.8

TRAIN 1 (Post First Hour Change-out)

Sample Component	Reagent	Filter, Probe or Dish #	Weights		
			Final, mg	Tare, mg	Particulate, mg
B. Front filter catch	Filter	E738	117.1	117.1	0.0
C. Rear filter catch	Filter	E739	115.7	115.9	0.0
D. Probe catch*	Probe	3	116011.2	116011.1	0.1
E. Filter seals catch*	Seals	S447	3269.4	3268.8	0.6

Sub-Total | Total Particulate, mg: | 0.7

Train 1 Aggregate | Total Particulate, mg: | **3.5**

TRAIN 2

Sample Component	Reagent	Filter, Probe or Dish #	Weights		
			Final, mg	Tare, mg	Particulate, mg
A. Front filter catch	Filter	E740	119.1	117.5	1.6
B. Rear filter catch	Filter	E757	115.7	115.6	0.1
C. Probe catch*	Probe	15	114340.4	114340.3	0.1
D. Filter seals catch*	Seals	S448	3301.5	3300.8	0.7

Total Particulate, mg: | **2.5**

AMBIENT

Sample Component	Reagent	Filter # or Probe #	Weights		
			Final, mg	Tare, mg	Particulate, mg
A. Front filter catch*	Filter	E759	116.7	116.7	0.0

Total Particulate, mg: | **0.0**

*Particulate catch that results in a negative number, is assumed to be zero for probes and seals, negative numbers for filters are assumed to be part of the seal weight.

Component	Equations:
A. Front filter catch	Final (mg) - Tare (mg) = Particulate, mg
B. Rear filter catch	Final (mg) - Tare (mg) = Particulate, mg
C. Probe catch	Final (mg) - Tare (mg) = Particulate, mg

Technician Signature:_____

Wood Heater Test Results - ASTM E2780 / ASTM E2515

Manufacturer:	Kuma
Model:	K-181
Project No.:	0123WM013E
Tracking No.:	2461
Run:	4
Test Date:	12/15/22

Burn Rate	**1.51 kg/hr dry**
Average Tunnel Temperature	89 degrees Fahrenheit
Average Gas Velocity in Dilution Tunnel - vs	18.53 feet/second
Average Gas Flow Rate in Dilution Tunnel - Qsd	12527.0 dscf/hour
Average Delta p	0.101 inches H20
Total Time of Test	175 minutes

Uncorrected

	AMBIENT	SAMPLE TRAIN 1	SAMPLE TRAIN 2	FIRST HOUR FILTER (TRAIN 1)
Total Sample Volume - Vm	37.573 cubic feet	28.004 cubic feet	27.987 cubic feet	9.545 cubic feet
Average Gas Meter Temperature	68 degrees Fahrenheit	78 degrees Fahrenheit	78 degrees Fahrenheit	75 degrees Fahrenheit
Total Sample Volume (Standard Conditions) - Vmstd	38.795 dscf	28.129 dscf	28.026 dscf	9.643 dscf
Total Particulates - m_n	0 mg	3.5 mg	2.5 mg	2.8 mg
Particulate Concentration (dry-standard) - C_f/C_s	0.000000 grams/dscf	0.00012 grams/dscf	0.00009 grams/dscf	0.00029 grams/dscf
Total Particulate Emissions - E_T	0.00 grams	4.55 grams	3.26 grams	3.64 grams
Particulate Emission Rate	0.00 grams/hour	1.56 grams/hour	1.12 grams/hour	3.64 grams/hour
Emissions Factor		1.04 g/kg	0.74 g/kg	1.81 g/kg
Difference from Average Total Particulate Emissions		0.64 grams	0.64 grams	

Dual Train Comparison Results Are Acceptable

FINAL AVERAGE RESULTS

Complete Test Run	
Total Particulate Emissions - E_T	3.90 grams
Particulate Emission Rate	**1.34 grams/hour**
Emissions Factor	0.89 grams/kg
First Hour Emissions	
Total Particulate Emissions - E_T	3.64 grams
Particulate Emission Rate	3.64 grams/hour
Emissions Factor	1.81 grams/kg
7.5% of Average Total Particulate Emissions	0.29 grams

QUALITY CHECKS

Filter Temps < 90 °F	OK
Filter Face Velocity (47 mm)	OK
Dryer Exit Temp < 80F	OK
Leakage Rate	OK
Ambient Temp (55-90°F)	OK
Negative Probe Weight Eval.	OK
Pro-Rate Variation	OK
Stove Surface ΔT	OK
Train Precesion 7.5%	16.49
Train Precision 0.5g/kg	0.29

Technician Signature:_____

VERSION: 2.4 4/15/2010

Manufacturer: Kuma Industries
Model: K-181
Date: 12/15/2022
Run: 4
Control #: 0123WM013E
Test Duration: 175
Output Category: 3

Appliance Type: Cat (Cat, Non-Cat, Pellet)

Temp. Units F (F or C)
Weight Units lb (kg or lb)

Default Fuel Values

	D. Fir	Oak
HHV (kJ/kg)	19,810	19,887
%C	48.73	50
%H	6.87	6.6
%O	43.9	42.9
%Ash	0.5	0.5

Wood Moisture (% wet): 16.52
Load Weight (lb wet): 11.60
Burn Rate (dry kg/h): 1.51
Total Particulate Emissions: 3.45 g

Fuel Data

	D. Fir	
HHV	19,810	kJ/kg
%C	48.73	
%H	6.87	
%O	43.9	
%Ash	0.5	

Note 1: For other fuels, use the heating value and fuel composition determined by analysis of fuel sample in accordance with Clause 9.2.

Note 2: In cases where the "Fuel Weight Remaining" is the same for three or more readings in a row, a "divide by zero error" will occur in the calculation sheet. In such cases, adjust the weight values by interpolation between the first occurence and the next reading showing a decrease in weight.

						Temp. (ºF)	
	Averages	**0.14**	**11.96**	**#DIV/0!**	**392.66**	**68.07**	
Elapsed Time (min)	**Fuel Weight Remaining (lb)**	**Flue Gas Composition (%) CO**	**CO_2**	**O_2**	**Flue Gas**	**Room Temp**
0	11.60	0.21	1.14		317.0	68.0
1	11.50	0.19	0.98		310.0	68.0
2	11.50	0.25	1.60		317.0	68.0
3	11.50	0.07	6.71		348.0	68.0
4	11.40	0.07	7.17		385.0	68.0
5	11.30	0.09	6.88		406.0	68.0
6	11.30	0.06	7.67		376.0	68.0
7	11.30	0.04	6.37		357.0	68.0
8	11.20	0.04	6.49		345.0	68.0
9	11.20	0.04	6.50		339.0	68.0
10	11.10	0.04	6.36		335.0	68.0
11	11.10	0.05	6.32		331.0	67.0
12	11.10	0.05	6.36		329.0	67.0
13	11.00	0.05	6.46		327.0	68.0
14	11.00	0.05	6.55		326.0	68.0
15	10.90	0.05	6.21		325.0	68.0
16	10.90	0.06	6.16		324.0	68.0
17	10.90	0.06	6.20		323.0	67.0
18	10.80	0.06	6.18		322.0	67.0

19	10.80	0.06	6.34		322.0	68.0
20	10.70	0.06	6.60		323.0	68.0
21	10.70	0.05	8.58		328.0	67.0
22	10.60	0.04	9.63		338.0	68.0
23	10.50	0.04	8.34		345.0	68.0
24	10.50	0.05	7.69		348.0	68.0
25	10.40	0.06	7.54		349.0	68.0
26	10.40	0.06	7.54		350.0	68.0
27	10.30	0.06	7.90		351.0	69.0
28	10.20	0.06	8.26		354.0	68.0
29	10.20	0.05	8.97		357.0	67.0
30	10.10	0.05	11.41		364.0	68.0
31	10.00	0.06	10.36		371.0	67.0
32	9.90	0.06	9.73		375.0	68.0
33	9.90	0.06	9.97		379.0	67.0
34	9.80	0.07	10.18		386.0	68.0
35	9.70	0.07	10.24		392.0	68.0
36	9.60	0.08	10.76		398.0	68.0
37	9.50	0.08	11.72		404.0	67.0
38	9.40	0.09	13.42		418.0	68.0
39	9.20	0.53	16.57		432.0	67.0
40	9.10	0.65	17.03		442.0	67.0
41	8.90	0.65	17.50		449.0	67.0
42	8.80	0.79	17.97		457.0	68.0
43	8.60	0.95	18.52		463.0	68.0
44	8.50	0.94	18.42		468.0	68.0
45	8.30	0.84	18.52		472.0	68.0
46	8.20	0.69	18.62		474.0	68.0
47	8.00	0.60	18.66		476.0	68.0
48	7.90	0.56	18.60		478.0	68.0
49	7.70	0.53	18.48		479	68
50	7.60	0.52	18.41		480	68
51	7.40	0.35	18.28		481	68
52	7.30	0.16	17.85		480	68
53	7.20	0.16	17.72		479	68
54	7.10	0.13	17.61		478	68
55	6.90	0.14	17.52		477	68
56	6.80	0.19	17.5		477	68
57	6.70	0.25	17.5		476	68

58	6.50	0.18	17.68		476	68
59	6.40	0.32	17.62		477	68
60	6.30	0.35	17.37		477	68
61	6.10	0.36	17.26		476	68
62	6.00	0.4	17.38		475	68
63	5.90	0.44	17.35		473	68
64	5.70	0.42	17.42		472	68
65	5.60	0.43	17.55		471	68
66	5.50	0.38	17.63		471	68
67	5.30	0.42	17.86		472	69
68	5.20	0.42	18.04		472	68
69	5.10	0.44	18.06		473	69
70	5.00	0.42	18.13		473	69
71	4.80	0.37	18.1		472	68
72	4.70	0.35	18.1		472	68
73	4.60	0.28	18.07		472	68
74	4.50	0.28	18.13		472	68
75	4.30	0.25	18.06		472	68
76	4.20	0.28	18.16		471	68
77	4.10	0.19	18.25		471	69
78	4.00	0.32	18.22		471	68
79	3.90	0.24	18.33		470	68
80	3.80	0.23	17.76		468	68
81	3.70	0.15	17.47		466	68
82	3.60	0.14	17.14		464	68
83	3.50	0.1	16.88		463	68
84	3.40	0.09	16.59		462	69
85	3.30	0.08	16.1		461	69
86	3.20	0.08	15.77		460	68
87	3.10	0.09	15.39		458	69
88	3.00	0.09	14.83		457	69
89	3.00	0.09	14.54		455	68
90	2.90	0.08	14.33		451	69
91	2.80	0.07	14.03		446	68
92	2.80	0.07	13.69		441	68
93	2.70	0.06	13.3		435	68
94	2.60	0.06	13.22		431	68
95	2.60	0.06	13.1		427	68
96	2.50	0.06	13.06		423	68

97	2.50	0.06	12.98		419	69
98	2.40	0.05	12.74		417	69
99	2.30	0.05	12.74		413	68
100	2.30	0.05	12.8		411	68
101	2.20	0.05	12.75		408	68
102	2.20	0.04	12.78		405	68
103	2.10	0.04	12.82		402	68
104	2.10	0.04	12.66		400	68
105	2.00	0.04	11.75		398	68
106	2.00	0.05	11.42		396	68
107	2.00	0.05	10.98		393	68
108	1.90	0.05	10.85		392	68
109	1.90	0.05	10.68		389	68
110	1.80	0.05	10.74		387	68
111	1.80	0.05	10.8		386	68
112	1.80	0.05	10.99		385	69
113	1.70	0.05	11.08		384	68
114	1.70	0.05	11.21		383	68
115	1.70	0.05	11.4		383	69
116	1.60	0.04	11.61		383	68
117	1.60	0.04	11.8		382	69
118	1.50	0.04	12.04		382	68
119	1.50	0.03	12.26		381	68
120	1.50	0.03	12.43		380	68
121	1.40	0.03	12.58		379	68
122	1.40	0.03	12.62		379	68
123	1.30	0.03	12.28		379	69
124	1.30	0.04	12.13		379	68
125	1.30	0.03	11.93		379	68
126	1.20	0.04	11.84		378	69
127	1.20	0.05	11.52		380	68
128	1.20	0.05	11.17		380	68
129	1.10	0.06	10.81		380	68
130	1.10	0.06	10.38		379	68
131	1.10	0.06	9.97		376	68
132	1.10	0.06	9.99		373	68
133	1.00	0.06	9.93		371	68
134	1.00	0.05	9.77		368	68
135	1.00	0.05	9.63		364	68

136	1.00	0.05	9.47		360	69
137	0.90	0.05	9.47		357	68
138	0.90	0.05	9.53		354	69
139	0.90	0.05	9.5		351	68
140	0.90	0.05	9.49		349	69
141	0.80	0.05	9.3		347	68
142	0.80	0.04	9.32		344	68
143	0.80	0.04	9.38		342	68
144	0.80	0.04	9.43		340	68
145	0.70	0.04	9.24		337	68
146	0.70	0.04	9.27		335	68
147	0.70	0.05	9.15		334	68
148	0.70	0.05	9.22		334	68
149	0.70	0.05	9.32		333	68
150	0.60	0.04	9.32		331	68
151	0.60	0.05	9.35		331	69
152	0.60	0.05	9.32		330	68
153	0.60	0.05	9.23		329	69
154	0.60	0.05	9.28		329	68
155	0.50	0.05	9.32		329	69
156	0.50	0.05	9.32		329	68
157	0.50	0.05	9.3		329	68
158	0.50	0.05	9.27		329	68
159	0.50	0.05	9.32		328	68
160	0.40	0.05	9.31		328	68
161	0.40	0.05	9.3		328	68
162	0.40	0.05	9.3		328	68
163	0.40	0.06	9.32		328	68
164	0.30	0.06	9.3		328	68
165	0.30	0.06	9.23		327	68
166	0.30	0.05	9.21		327	69
167	0.30	0.05	9.09		326	68
168	0.30	0.06	9.01		325	68
169	0.20	0.06	8.95		325	68
170	0.20	0.06	9.05		324	68
171	0.20	0.06	9.02		324	68
172	0.20	0.06	9.04		324	69
173	0.20	0.06	9.01		324	68
174	0.10	0.06	8.94		324	68

175	0.00	0.06	8.96		324	68

ABC Laboratories, Inc.

Manufacturer: Kuma Industries
Model: K-181
Date: 12/15/22
Run: 4
Control #: 0123WM013E
Test Duration: 175
Output Category: 3

Technicians: _____

_____

_____

Test Results in Accordance with CSA B415.1-10

	HHV Basis	LHV Basis
Overall Efficiency	77.5%	83.8%
Combustion Efficiency	99.1%	99.1%
Heat Transfer Efficiency	78%	84.6%

Output Rate (kJ/h)	23,133	21,944	**(Btu/h)**
Burn Rate (kg/h)	1.51	3.32	**(lb/h)**
Input (kJ/h)	29,842	28,308	**(Btu/h)**

Test Load Weight (dry kg)	4.39	9.68	**dry lb**
MC wet (%)	16.52		
MC dry (%)	19.79		
Particulate (g)	3.45		
CO (g)	69		
Test Duration (h)	2.92		

Emissions	Particulate	CO
g/MJ Output	0.05	1.02
g/kg Dry Fuel	0.79	15.60
g/h	1.18	23.50
lb/MM Btu Output	0.12	2.36

Air/Fuel Ratio (A/F)	9.38

VERSION: **2.4** **4/15/2010**

ASTM E2780 Wood Heater Run Sheets

Client: Kuma Project Number: 0123WM013E Run Number: 4
Model: K-181 Tracking Number: 2461 Date: 12/15/2022
Test Crew: TT, BD
OMNI Equipment ID numbers: 20637, 00709, 00283A

ASTM E2515 Lab Sheet

Assembled By:

Tony Tong

Date/Time in Dessicator:

12/15/2022, 15:30

	Weighing #1	Weighing #2	Weighing #3	Weighing #4	Weighing #5
Date/Time:	12/20/22 9:00	12/21/22 10:00	12/22/22 9:00		
R/H %:	9.6	11.2	8.0		
Temp:	63.3	64.7	58.8		
200 mg Audit:	200.1	200.1	200.0		
2 g Audit:	2000.3	2000.3	2000.3		
100 g Audit:	99997.9	99998.0	99997.9		
Initials:	TT	TT	TT		

Train	Element	ID #	Tare (mg)	Weight (mg)	Weight (mg)	Weight (mg)	Weight (mg)	Weight (mg)
A (First Hour)	Front Filter	E735	116.4	118.0	118.0			
	Rear Filter	E736	116.9	116.4	116.4			
	Probe	2	115012.2	115012.3	115012.3			
	O-Ring Set	S446	4053.5	4054.5	4054.6			
A (Remainder)	Front Filter	E738	117.1	117.2	116.9	117.1		
	Rear Filter	E739	115.9	115.7	115.7			
	Probe	3	116011.1	116011.3	116011.2			
	O-Ring Set	S447	3268.8	3269.3	3269.4			
B	Front Filter	E740	117.5	118.9	119.1			
	Rear Filter	E757	115.6	115.5	115.7			
	Probe	15	114340.3	114340.4	114340.4			
	O-Ring Set	S448	3300.8	3301.4	3301.5			
BG	Filter	E759	116.7	116.8	116.7			

Technician Signature: Tony Tong Date: 12/15/2022

6OMNI-Test Laboratories, Inc. **ASTM E2780 Wood Heater Run Sheets**

Client: Kuma Project Number: 0123WM013E Run Number: 4
Model: K-181 Tracking Number: 2461 Date: 12/15/2022
Test Crew: TT, BD
OMNI Equipment ID numbers: 00335, 00336, 00594, 00185

Wood Heater Run Notes

Air Control Settings

Primary:

Air setting @ 0.56" from fully closed

Secondary: Fixed

Tertiary/Pilot: NA

Fan: On high @ 5 mins

Preburn Notes

Time	Notes
8:35	Loading first rick & kindling (9 lbs + 4 lbs)
9:48	Adding second rick 9.5 lbs at 1.2 lb of coal
10:48	Adding Preburn rick 9.6 lbs at 1.5 lbs of coal
11:10	Recording Preburn at 6.4 lbs
11:48	Leveled ~~the~~ coal

Test Notes

Sketch test fuel configuration:

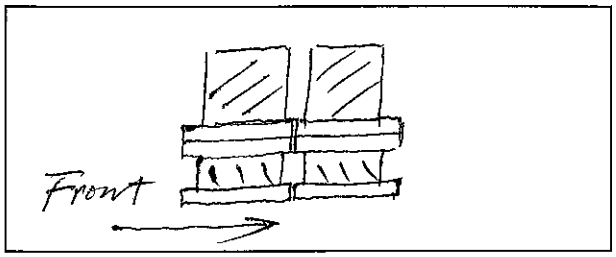

Start up procedures & Timeline:

Bypass: Used for fuel loading
Fuel loaded by: 60 seconds
Door closed at: 90 seconds
Primary air: open for 5 mins

Notes: ~~Fan off for first~~ 5 mins ~~then on high for~~ the remainder of test.

Time	Notes
12:11	Test started
13:11	changing first hour filters
15:06	Test ended

Technician Signature: Tony Tang Date: 12/15/22

6OMNI-Test Laboratories, Inc. **ASTM E2780 Wood Heater Run Sheets**

Client: Kuma Project Number: 0123WM013E Run Number: 4

Model: K-181 Tracking Number: 2461 Date: 12/15/2022

Test Crew: TT, BD

OMNI Equipment ID numbers: ~~00594~~, ~~00335~~, ~~00336~~, 00322, 00410, 00716, 00255, 00677

Wood Heater Supplemental Data

Start Time: 12:11

Stop Time: 15:06

Booth #: E1

Stack Gas Leak Check:

Initial: ~~good~~ Final: good

Sample Train Leak Check:

A: ~~4.000~~ 0.000 @ ~~14.38~~ 14.38 "Hg

B: 0.000 @ 11.1 "Hg

Calibrations: Span Gas CO_2: 16.94/10.08 CO: 4.32/2.53

	Pre Test		Post Test	
	Zero	Span	Zero	Span
Time	11:37	~~11:40~~ ~~16.94~~	15:17	15:20
CO_2	0.00	16.94/10.05	~~2.00~~ 0.00 ~~2.00~~	16.90/10.02
CO	0.00	4.34/2.51	~~0.00~~ 0.00 ~~0.00~~	4.34/2.51

Air Velocity (ft/min): Initial: <50 Final: <50

Scale Audit (lbs): Initial: 10 Final: 10

Pitot Tube Leak Test: Initial: good Final: good

Stack Diameter (in): 6

Induced Draft: 0.001

% Smoke Capture: 100

Flue Pipe Cleaned Prior to First Test in Series:

Date: 12/01/22 Initials: TT

	Initial	Middle	Ending
P_b (in/Hg)	30.45	30.41	30.41
RH (%)	32	32	31
Ambient (°F)	68	68	68

Tunnel Traverse

Microtector Reading	dP (in H_2O)	T(°F)
1	.070	87
2	.088	87
3	.086	86
4	.064	86
5	.062	86
6	.084	81
7	.094	80
8	.068	78
Center:		
	.102	82

Background Filter Volume: 37.573 ft^3

Tunnel Static Pressure (in H_2O):	
Beginning of Test	End of Test
-0.32	-0.32

Technician Signature: Tony Tong Date: 12/15/22

ASTM E2780 Wood Heater Run Sheets

Client: Kuma Project Number: 0123WM013E Run Number: 4
Model: K-181 Tracking Number: 2461 Date: 12/15/2022
Test Crew: TT, BD
OMNI Equipment ID numbers: 00340, 00431, T61, 00353

Wood Heater Fuel Data

Fuel: Douglas fir, untreated and air dried, standard grade or better dimensional lumber

Pre-Burn Fuel

Calibration: Cal Value (1) = 12% Actual Reading 12.9
Cal Value (2) = 22% Actual Reading 22.9

Piece:	Length:	Reading:	Piece:	Length:	Reading:
1	12 in	19.7	7	11 in	22.8
2	11 in	23.8	8	11 in	20.9
3	11 in	23.8	9	in	
4	11 in	19.4	10	in	
5	11 in	19.3	11	in	
6	11 in	20.4	12	in	

Total Pre-Burn Fuel Weight: 9.6 lbs Pre-Burn Fuel Average Moisture:
Time (clock): 10:00 Room Temperature (F): 69 Initials: TT

Test Fuel

Firebox Volume (ft³): 1.731
Load Weight Range (lb): (10.9, 13.3)
Test Fuel Piece Length (in): 15.25
Total Wet Fuel Load Weight (lb): 11.6 (2.32, 2.90)

Fuel Type & Amount: 2 x 4: 2 4 x 4: 2
Weight (with spacers): 4.2 lbs Weight (with spacers): 7.4 lbs

Piece:	Weight (lbs):	Moisture Readings (%DB):				Fuel Type:
1	1.7	20.5	21.4	22.8		2x4
2	1.7	23.0	19.2	23.0		2x4
3	3.7	19.9	20.3	21.1		4x4
4	3.3	22.1	19.2	19.7		4x4
5						
6						
7						

Spacer Moisture Readings (%DB)

9.4	10.6	16.4	9.4	11.0	9.3	11.1	16.2
11.0	17.2	9.6	9.8				

Time (clock): 10:20 Room Temperature (F): 69 Initials: TT

Technician Signature: Tony Tong Date: 12/15/22

Run 5

Medium Low Burn (Category II)

Wood Heater Preburn Data - ASTM E2780

Run: 5

Technician Signature:_____

Manufacturer:	Kuma Stoves
Model:	K - 181
Tracking No.:	2461
Project No.:	0123WM013E
Test Date:	12/19/22
Beginning Clock Time:	11:36

Preburn Fuel Data

Fuel Piece Lengths (in.):	12		
Total Preburn Weight (lb):	9.6		
Fuel Moisture Readings (% DB):	19.1	23.1	22.2
	24.5	22.5	23.1
	19.0		
Avg Preburn Moisture (% DB):	**21.9**		

Coal Bed Range (lb):	**2.3** (min)	**2.9** (max)

			Temperatures (°F)							
Elapsed Time (min)	Scale (lb)	Stack Draft (in H_2O)	FB Top	FB Bottom	FB Back	FB Left	FB Right	Avg. FB	Stack	Ambient
0	5.7	-0.086	838	291	488	498	519	527	653	66
1	5.6	-0.085	836	295	489	499	522	528	571	67
2	5.5	-0.082	832	297	490	500	525	529	537	66
3	5.4	-0.08	827	298	491	502	528	529	518	66
4	5.3	-0.079	821	300	492	503	530	529	504	66
5	5.2	-0.078	815	301	493	503	532	529	494	66
6	5.1	-0.078	809	302	493	504	533	528	487	66
7	5	-0.078	804	303	494	504	534	528	482	66
8	4.9	-0.077	799	304	493	504	535	527	477	66
9	4.8	-0.076	795	305	493	504	535	526	471	67
10	4.7	-0.075	792	305	492	503	535	525	467	67
11	4.6	-0.074	787	306	492	503	534	524	462	66
12	4.5	-0.074	782	306	491	502	534	523	457	65
13	4.4	-0.075	778	307	491	501	533	522	453	66
14	4.3	-0.073	774	307	490	501	532	521	449	66
15	4.2	-0.073	771	307	489	500	532	520	446	66
16	4.2	-0.071	764	307	489	500	531	518	439	66
17	4.1	-0.071	757	307	488	499	530	516	432	66
18	4	-0.07	750	308	488	498	529	515	425	66
19	4	-0.07	741	308	487	497	528	512	421	66
20	3.9	-0.069	733	307	486	497	528	510	417	67
21	3.9	-0.069	727	307	486	496	527	509	413	66
22	3.8	-0.069	719	308	485	495	526	507	411	66
23	3.7	-0.068	713	308	485	494	525	505	408	66
24	3.7	-0.069	707	309	485	492	523	503	405	67
25	3.6	-0.067	702	309	484	492	522	502	403	69
26	3.6	-0.067	696	310	484	491	521	500	401	69
27	3.5	-0.068	691	310	484	490	520	499	399	70
28	3.5	-0.067	686	310	484	489	519	498	397	71
29	3.4	-0.067	683	311	484	488	518	497	396	71
30	3.3	-0.066	680	311	484	487	517	496	396	72
31	3.3	-0.066	676	312	485	486	517	495	393	72
32	3.2	-0.065	674	312	485	485	516	494	390	73
33	3.2	-0.065	671	313	485	484	516	494	386	73
34	3.1	-0.064	667	313	485	484	514	493	383	73
35	3.1	-0.062	663	313	486	483	514	492	381	74
36	3.1	-0.062	657	314	485	482	512	490	377	74
37	3	-0.063	652	314	485	481	511	489	375	75
38	3	-0.062	647	314	485	480	509	487	374	75
39	3	-0.061	642	314	485	478	507	485	372	75

Wood Heater Preburn Data - ASTM E2780

Run: 5

Technician Signature:_____

Manufacturer:	Kuma Stoves
Model:	K - 181
Tracking No.:	2461
Project No.:	0123WM013E
Test Date:	12/19/22
Beginning Clock Time:	11:36

Preburn Fuel Data

Fuel Piece Lengths (in.):	12		
Total Preburn Weight (lb):	9.6		
Fuel Moisture Readings (% DB):	19.1	23.1	22.2
	24.5	22.5	23.1
	19.0		
Avg Preburn Moisture (% DB):	**21.9**		

Coal Bed Range (lb):	**2.3** (min)	**2.9** (max)

			Temperatures (°F)							
Elapsed Time (min)	Scale (lb)	Stack Draft (in H_2O)	FB Top	FB Bottom	FB Back	FB Left	FB Right	Avg. FB	Stack	Ambient
40	2.9	-0.06	638	315	485	477	506	484	369	75
41	2.9	-0.06	632	315	485	476	504	482	366	75
42	2.9	-0.06	626	315	485	475	502	481	363	75
43	2.8	-0.059	620	315	485	474	500	479	361	75
44	2.8	-0.058	613	315	484	472	498	476	358	75
45	2.8	-0.058	607	316	484	471	496	475	354	76
46	2.8	-0.058	601	316	484	470	493	473	351	76
47	2.7	-0.058	595	316	484	468	491	471	348	76
48	2.7	-0.057	589	316	483	467	489	469	346	76
49	2.7	-0.056	584	316	483	466	487	467	345	76
50	2.7	-0.057	578	317	483	465	485	466	343	76
51	2.6	-0.056	573	317	482	463	483	464	341	75
52	2.6	-0.056	569	317	482	461	481	462	339	75
53	2.6	-0.055	565	317	481	460	479	460	338	73
54	2.6	-0.055	560	317	480	458	477	458	337	72
55	2.6	-0.056	557	317	479	457	475	457	335	72
56	2.6	-0.055	551	317	478	455	473	455	334	70
57	2.6	-0.055	548	317	477	454	471	453	332	69
58	2.5	-0.055	544	317	476	452	469	452	331	69
59	2.5	-0.055	540	317	475	450	467	450	330	69
60	2.5	-0.056	537	317	474	449	465	448	329	69
61	2.5	-0.055	533	317	472	447	463	446	329	68
62	2.5	-0.054	530	317	471	446	461	445	326	68
63	2.5	-0.055	527	317	470	445	459	444	326	68
64	2.4	-0.055	525	317	469	443	457	442	325	68

Wood Heater Test Fuel Data - ASTM E2780

Manufacturer:	Kuma Stoves
Model:	K - 181
Tracking No.:	2461
Project No.:	0123WM013E
Test Date:	12/19/2022
Run No.:	5

Firebox Volume (ft^3):	1.731
Fuel Piece Length (in):	15.25
2x4 Crib Weight (lb):	4.3
4x4 Crib Weight (lb):	7.2

Total Fuel Weight (Dry Basis, lb):	9.6	
Fuel Density (lb/ft^3, Dry Basis):	27.36	OK
Loading Density (lb/ft^3, Wet Basis):	6.64	OK
2x4 Percentage:	37%	OK

Coal Bed Range (20-25%): **2.3 - 2.875**

Test Fuel Piece	Weight (lb)	Size	Readings (Dry Basis %)			Dry Weight (lb)
1	1.7	2"x 4"	19.1	19.4	20.3	1.42
2	1.7	2"x 4"	19.5	21.7	22.4	1.40
3	2.9	4"x 4"	19.8	19.3	19.3	2.43
4	3.9	4"x 4"	21.4	21.1	23.3	3.20

Spacer Readings (Dry Basis %)			
19.2	18.6	20.3	20.8
18.8	20.4	20.6	19.7
10.7	11.5	7.3	13.7

Technician Signature:_____

Wood Heater Test Data

Run: 5

Manufacturer: Kuma Stoves
Model: K - 181
Tracking No.: 2461
Project No.: 0123WM013E
Test Date: 19-Dec-22
Beginning Clock Time: 12:40

Total Sampling Time: 235 min
Recording Interval: 1 min
Background Sample Volume: 50.115 cubic feet

Meter Box Y Factor: 1.004 (1) 1.002 (2) 1.016 (Amb)

Barometric Pressure:	Begin	Middle	End	Average	
	30.27	30.26	30.27	30.27	0

OMNI Equipment Numbers:

PM Control Modules: 335, 00336
Dilution Tunnel MW(dry): 29.00 lb/lb-mole
Dilution Tunnel MW(wet): 28.78 lb/lb-mole
Dilution Tunnel H2O: 2.00 percent
Dilution Tunnel Static: -0.320 "H2O
Tunnel Area: 0.19625 ft2
Pitot Tube Cp: 0.99

Avg. Tunnel Velocity: 18.17 ft/sec.
Initial Tunnel Flow: 203.4 scfm
Average Tunnel Flow: 204.7 scfm
Post-Test Leak Check (1): 0.000 cfm @ 14 in. Hg
Post-Test Leak Check (2): 0.000 cfm @ 16 in. Hg
Average Test Piece Fuel Moisture: 20.26 Dry Basis %

Technician Signature:_____

Export to PDF

Velocity Traverse Data

	Pt.1	Pt.2	Pt.3	Pt.4	Pt.5	Pt.6	Pt.7	Pt.8	Center	
Initial dP	0.062	0.082	0.086	0.058	0.058	0.084	0.090	0.068	0.098	"H2O
Temp:	91	91	91	91	90	90	90	90	91	°F

V_{strav} 18.18 ft/sec V_{scent} 21.08 ft/sec F_p 0.862

	Particulate Sampling Data														Fuel Weight (lb)		Temperature Data (°F)											Stack Gas Data		
Elapsed Time (min)	Gas Meter 1 (ft^3)	Gas Meter 2 (ft^3)	Sample Rate 1 (cfm)	Sample Rate 2 (cfm)	Orifice dH 1 ("H_2O)	Meter 1 Temp (°F)	Meter 1 Vacuum ("Hg)	Orifice dH 2 ("H_2O)	Meter 2 Temp (°F)	Meter 2 Vacuum ("Hg)	Dilution Tunnel (°F)	Dilution Tunnel Center dP	Pro. Rate 1	Pro. Rate 2	Scale Reading	Weight Change	Firebox Top	Firebox Bottom	Firebox Back	Firebox Left	Firebox Right	Avg. Stove Surface	Catalyst Exit	Stack	Filter 1	Dryer Exit 1	Filter 2	Dryer Exit 2	Ambient	Draft ("H_2O)	CO_2 (%)	CO (%)
0	0.000	0.000			1.19	74	2.65	1.07	74	2.2	101	0.100			11.5		514	320	467	443	456	440	536	353	68	52	69	53	68	-0.051	2.71	0.28
1	0.145	0.156	0.15	0.16	1.25	74	2.73	1.09	74	2.3	132	0.097	95	103	11.5	0	502	322	464	442	455	437	438	348	70	47	70	48	68	-0.056	0.86	0.27
2	0.303	0.315	0.16	0.16	1.24	74	2.7	1.10	74	2.3	103	0.098	101	102	11.3	-0.2	492	314	462	440	454	432	547	379	71	46	70	48	67	-0.070	6.08	0.17
3	0.460	0.476	0.16	0.16	1.24	73	2.7	1.09	74	2.3	98	0.100	99	102	11.2	-0.1	489	309	460	438	453	430	718	441	71	46	70	48	68	-0.075	6.86	0.08
4	0.617	0.635	0.16	0.16	1.23	73	2.7	1.09	74	2.3	97	0.098	100	101	11.1	-0.1	488	305	457	436	451	427	764	469	71	46	70	48	67	-0.076	7.32	0.08
5	0.775	0.794	0.16	0.16	1.23	74	2.69	1.08	74	2.3	89	0.098	100	101	11.1	0	488	309	454	433	449	427	767	398	71	46	70	48	67	-0.067	6.34	0.04
6	0.931	0.954	0.16	0.16	1.23	74	2.68	1.08	74	2.2	87	0.098	98	101	11.1	0	486	311	450	430	446	425	729	367	70	46	70	48	67	-0.065	5.03	0.03
7	1.088	1.112	0.16	0.16	1.26	74	2.75	1.08	74	2.2	85	0.099	98	99	11.0	-0.1	482	312	446	427	442	422	696	349	70	46	70	47	66	-0.064	4.93	0.03
8	1.249	1.272	0.16	0.16	1.26	74	2.73	1.08	74	2.2	85	0.099	101	100	11.0	0	478	312	442	423	438	419	681	339	70	46	70	47	66	-0.062	5.06	0.03
9	1.408	1.431	0.16	0.16	1.26	74	2.74	1.08	74	2.2	85	0.098	100	100	11.0	0	474	313	437	420	434	416	676	333	70	46	70	47	67	-0.061	5.61	0.03
10	1.566	1.590	0.16	0.16	1.26	74	2.73	1.07	74	2.2	85	0.096	100	101	10.9	-0.1	470	313	433	416	430	412	694	331	70	46	70	47	66	-0.061	5.65	0.03
11	1.725	1.748	0.16	0.16	1.26	74	2.74	1.07	74	2.2	85	0.098	100	100	10.9	0	468	313	428	412	426	409	694	328	70	46	70	47	67	-0.061	5.65	0.03
12	1.885	1.907	0.16	0.16	1.26	74	2.73	1.07	74	2.2	85	0.099	100	100	10.9	0	465	313	423	408	422	406	690	326	70	46	70	47	66	-0.061	5.87	0.03
13	2.044	2.066	0.16	0.16	1.26	74	2.73	1.07	74	2.2	85	0.098	100	100	10.8	-0.1	462	313	419	404	418	403	691	325	70	46	70	47	67	-0.061	5.98	0.04
14	2.202	2.225	0.16	0.16	1.26	74	2.72	1.07	74	2.2	85	0.098	99	100	10.8	0	459	312	414	400	414	400	703	326	70	46	70	47	67	-0.061	6.53	0.04
15	2.361	2.383	0.16	0.16	1.26	74	2.73	1.07	74	2.2	85	0.098	100	100	10.7	-0.1	457	311	410	396	409	397	715	329	70	46	69	47	67	-0.061	6.86	0.03
16	2.521	2.541	0.16	0.16	1.26	74	2.71	1.07	74	2.2	85	0.098	100	100	10.7	0	455	311	405	392	405	394	720	330	70	46	69	47	66	-0.061	7.21	0.04
17	2.679	2.701	0.16	0.16	1.26	74	2.71	1.07	74	2.2	85	0.096	100	102	10.6	-0.1	455	310	401	388	401	391	726	331	70	46	69	47	66	-0.062	7.15	0.04
18	2.838	2.859	0.16	0.16	1.27	74	2.72	1.07	75	2.2	85	0.098	100	99	10.6	0	455	309	396	384	397	388	728	333	70	46	69	47	66	-0.062	7.03	0.04
19	2.997	3.018	0.16	0.16	1.26	74	2.73	1.07	75	2.2	85	0.099	99	100	10.5	-0.1	455	308	392	380	393	386	732	335	70	47	69	47	66	-0.062	6.96	0.04
20	3.157	3.176	0.16	0.16	1.26	74	2.71	1.06	75	2.2	85	0.099	100	99	10.5	0	455	307	388	377	390	383	738	336	70	47	69	48	66	-0.062	7.15	0.05
21	3.316	3.335	0.16	0.16	1.27	74	2.73	1.06	75	2.2	85	0.099	99	100	10.4	-0.1	455	306	384	373	386	381	740	335	70	47	69	48	66	-0.062	7.11	0.04
22	3.475	3.494	0.16	0.16	1.27	75	2.73	1.06	75	2.2	84	0.098	100	100	10.4	0	455	305	380	370	382	378	740	336	70	47	69	48	66	-0.062	7.12	0.04
23	3.635	3.652	0.16	0.16	1.27	75	2.73	1.06	75	2.2	84	0.098	100	99	10.3	-0.1	455	304	376	367	379	376	744	336	70	47	69	48	66	-0.062	7.03	0.04
24	3.796	3.811	0.16	0.16	1.27	75	2.74	1.07	75	2.2	84	0.100	100	99	10.3	0	455	302	373	364	376	374	742	335	70	47	69	48	66	-0.062	7.22	0.04
25	3.956	3.970	0.16	0.16	1.26	75	2.72	1.06	75	2.2	84	0.098	100	100	10.2	-0.1	455	301	369	360	373	372	747	336	70	47	69	48	66	-0.062	7.25	0.05
26	4.115	4.128	0.16	0.16	1.27	75	2.74	1.07	75	2.2	84	0.097	100	100	10.2	0	455	300	366	358	369	370	756	338	70	47	69	48	66	-0.062	7.31	0.05
27	4.275	4.288	0.16	0.16	1.28	75	2.73	1.06	76	2.2	84	0.099	100	100	10.1	-0.1	457	298	362	355	366	368	761	339	70	47	69	48	66	-0.062	7.22	0.05
28	4.436	4.446	0.16	0.16	1.28	75	2.74	1.06	76	2.2	84	0.098	101	99	10.1	0	456	297	359	352	364	366	760	339	70	47	69	48	66	-0.062	7.11	0.05
29	4.596	4.604	0.16	0.16	1.27	75	2.74	1.06	76	2.2	84	0.098	100	99	10.0	-0.1	456	296	356	350	361	364	758	338	70	47	69	48	66	-0.062	7.09	0.05
30	4.755	4.764	0.16	0.16	1.27	75	2.74	1.06	76	2.2	84	0.098	100	100	10.0	0	456	294	353	347	358	362	764	339	70	48	69	48	66	-0.062	7.07	0.05
31	4.915	4.922	0.16	0.16	1.27	75	2.74	1.07	76	2.2	84	0.098	100	99	9.9	-0.1	456	293	350	345	355	360	769	339	70	48	69	48	66	-0.062	7.27	0.05
32	5.075	5.081	0.16	0.16	1.27	76	2.72	1.06	76	2.2	84	0.099	99	99	9.9	0	457	291	347	343	352	358	778	340	70	48	69	48	66	-0.062	7.54	0.05
33	5.236	5.240	0.16	0.16	1.27	76	2.74	1.06	76	2.2	84	0.098	101	100	9.8	-0.1	458	290	344	341	350	357	777	341	70	48	69	48	66	-0.062	7.36	0.05
34	5.396	5.399	0.16	0.16	1.27	76	2.73	1.07	76	2.2	84	0.098	100	100	9.8	0	458	289	341	339	347	355	781	342	70	48	69	48	66	-0.063	7.67	0.05
35	5.555	5.558	0.16	0.16	1.27	76	2.73	1.06	76	2.2	84	0.098	99	100	9.7	-0.1	460	287	338	337	345	353	787	343	70	48	69	48	66	-0.062	7.82	0.05

Wood Heater Test Data

Run: 5

Manufacturer: Kuma Stoves
Model: K - 181
Tracking No.: 2461
Project No.: 0123WM013E
Test Date: 19-Dec-22
Beginning Clock Time: 12:40

Total Sampling Time: 235 min
Recording Interval: 1 min
Background Sample Volume: 50.115 cubic feet

Meter Box Y Factor: 1.004 (1) 1.002 (2) 1.016 (Amb)

Barometric Pressure:

Begin	Middle	End	Average
30.27	30.26	30.27	30.27 0

OMNI Equipment Numbers:

PM Control Modules: 335, 00336
Dilution Tunnel MW(dry): 29.00 lb/lb-mole
Dilution Tunnel MW(wet): 28.78 lb/lb-mole
Dilution Tunnel H2O: 2.00 percent
Dilution Tunnel Static: -0.320 "H2O
Tunnel Area: 0.19625 ft2
Pitot Tube Cp: 0.99

Avg. Tunnel Velocity: 18.17 ft/sec.
Initial Tunnel Flow: 203.4 scfm
Average Tunnel Flow: 204.7 scfm
Post-Test Leak Check (1): 0.000 cfm @ 14 in. Hg
Post-Test Leak Check (2): 0.000 cfm @ 16 in. Hg
Average Test Piece Fuel Moisture: 20.26 Dry Basis %

Technician Signature:_____

Velocity Traverse Data

	Pt.1	Pt.2	Pt.3	Pt.4	Pt.5	Pt.6	Pt.7	Pt.8	Center	
Initial dP	0.062	0.082	0.086	0.058	0.058	0.084	0.090	0.068	0.098	"H2O
Temp:	91	91	91	91	90	90	90	90	91	°F

V_{strav} 18.18 ft/sec V_{scent} 21.08 ft/sec F_p 0.862

	Particulate Sampling Data														Fuel Weight (lb)		Temperature Data (°F)											Stack Gas Data		
Elapsed Time (min)	Gas Meter 1 (ft^3)	Gas Meter 2 (ft^3)	Sample Rate 1 (cfm)	Sample Rate 2 (cfm)	Orifice dH 1 ("H_2O)	Meter 1 Temp (°F)	Meter 1 Vacuum ("Hg)	Orifice dH 2 ("H_2O)	Meter 2 Temp (°F)	Meter 2 Vacuum ("Hg)	Dilution Tunnel (°F)	Dilution Tunnel Center dP	Pro. Rate 1	Pro. Rate 2	Scale Reading	Weight Change	Firebox Top	Firebox Bottom	Firebox Back	Firebox Left	Firebox Right	Avg. Stove Surface	Catalyst Exit	Stack	Filter 1	Dryer Exit 1	Filter 2	Dryer Exit 2	Ambient	Draft ("H_2O)	CO_2 (%)	CO (%)
36	5.716	5.716	0.16	0.16	1.27	76	2.74	1.06	76	2.2	84	0.099	100	99	9.7	0	460	286	336	335	343	352	795	345	70	48	69	48	66	-0.063	8.1	0.05
37	5.876	5.875	0.16	0.16	1.28	76	2.74	1.06	76	2.2	85	0.097	101	100	9.6	-0.1	461	284	333	333	340	350	805	347	70	48	69	49	66	-0.063	8.46	0.06
38	6.037	6.035	0.16	0.16	1.27	76	2.74	1.07	76	2.2	84	0.098	101	100	9.6	0	464	283	331	332	338	350	818	350	70	48	69	49	66	-0.063	8.46	0.06
39	6.197	6.193	0.16	0.16	1.27	76	2.73	1.07	76	2.2	85	0.100	99	98	9.5	-0.1	466	281	328	330	336	348	827	352	70	48	69	49	66	-0.064	8.67	0.06
40	6.356	6.352	0.16	0.16	1.27	76	2.73	1.07	76	2.2	85	0.098	99	100	9.4	-0.1	470	280	326	329	334	348	852	357	70	48	69	49	66	-0.065	11.29	0.07
41	6.516	6.511	0.16	0.16	1.27	76	2.75	1.06	77	2.2	85	0.100	99	99	9.4	0	477	279	324	327	333	348	893	363	70	48	69	49	66	-0.065	11.26	0.07
42	6.677	6.670	0.16	0.16	1.27	76	2.74	1.07	77	2.2	85	0.100	100	99	9.3	-0.1	484	277	322	326	331	348	904	369	70	48	69	49	66	-0.066	10.91	0.06
43	6.838	6.830	0.16	0.16	1.27	76	2.74	1.06	77	2.2	85	0.098	101	100	9.2	-0.1	491	276	320	325	330	348	912	374	70	48	69	49	66	-0.067	11.68	0.07
44	6.998	6.988	0.16	0.16	1.27	76	2.74	1.06	77	2.2	85	0.099	100	99	9.1	-0.1	497	275	319	324	329	349	910	379	70	48	69	49	66	-0.067	13.27	0.07
45	7.157	7.147	0.16	0.16	1.27	76	2.73	1.06	77	2.2	86	0.097	100	100	9.0	-0.1	505	273	317	323	328	349	918	383	70	48	69	49	66	-0.068	13.18	0.07
46	7.318	7.306	0.16	0.16	1.27	77	2.73	1.07	77	2.2	86	0.098	101	100	9.0	0	514	272	316	322	327	350	934	387	70	48	69	49	66	-0.068	14.05	0.07
47	7.478	7.465	0.16	0.16	1.28	77	2.73	1.06	77	2.2	86	0.098	100	100	8.9	-0.1	525	271	315	321	327	352	955	392	70	49	69	49	66	-0.068	14.89	0.14
48	7.639	7.624	0.16	0.16	1.27	77	2.74	1.06	77	2.2	87	0.097	101	100	8.8	-0.1	538	270	313	321	327	354	971	397	70	49	69	49	66	-0.069	15.36	0.44
49	7.799	7.783	0.16	0.16	1.27	77	2.73	1.06	77	2.3	87	0.099	100	99	8.7	-0.1	553	268	313	321	327	356	987	402	70	49	69	49	66	-0.070	15.86	1.07
50	7.959	7.942	0.16	0.16	1.27	77	2.73	1.07	77	2.3	87	0.097	101	100	8.5	-0.2	566	267	312	321	327	359	999	407	70	49	69	49	66	-0.070	16.13	0.93
51	8.119	8.102	0.16	0.16	1.27	77	2.73	1.07	77	2.3	88	0.097	101	101	8.4	-0.1	581	266	311	321	327	361	1009	413	70	49	69	49	66	-0.071	16.33	1.23
52	8.280	8.262	0.16	0.16	1.28	77	2.73	1.07	77	2.3	88	0.098	101	101	8.3	-0.1	595	264	311	322	328	364	1014	416	70	49	69	49	66	-0.071	16.57	1.26
53	8.440	8.421	0.16	0.16	1.27	77	2.74	1.07	77	2.3	88	0.100	99	99	8.2	-0.1	609	263	310	322	328	366	1015	418	70	49	69	50	66	-0.072	16.36	0.76
54	8.600	8.581	0.16	0.16	1.27	77	2.74	1.08	77	2.3	88	0.097	101	101	8.1	-0.1	620	262	310	323	329	369	1015	420	70	49	69	50	65	-0.071	16.36	0.9
55	8.760	8.741	0.16	0.16	1.27	77	2.73	1.07	77	2.3	89	0.099	100	100	8.0	-0.1	630	261	310	325	330	371	1008	420	70	49	69	50	66	-0.071	16.23	0.62
56	8.920	8.900	0.16	0.16	1.27	77	2.74	1.08	77	2.3	88	0.098	100	100	7.9	-0.1	639	259	310	326	331	373	1005	421	70	49	69	50	66	-0.072	15.93	0.34
57	9.082	9.061	0.16	0.16	1.27	77	2.74	1.08	77	2.3	89	0.098	102	101	7.8	-0.1	647	258	311	328	332	375	1008	422	70	49	69	50	66	-0.070	16.14	0.24
58	9.242	9.220	0.16	0.16	1.27	77	2.75	1.07	77	2.3	89	0.098	100	100	7.7	-0.1	654	257	311	329	332	377	1012	424	70	49	69	50	66	-0.071	16.57	0.33
59	9.402	9.380	0.16	0.16	1.27	77	2.75	1.08	77	2.3	89	0.099	100	100	7.6	-0.1	663	256	312	331	334	379	1025	427	70	49	69	50	66	-0.072	17.29	0.64
60	9.562	9.540	0.16	0.16	1.27	77	2.74	1.07	77	2.3	90	0.097	101	101	7.5	-0.1	668	255	313	334	335	381	1026	429	70	49	69	50	66	-0.072	17.35	0.79
61	9.720	9.700	0.16	0.16	1.28	77	3.12	1.07	77	2.3	90	0.097	100	101	7.4	-0.1	674	254	313	336	336	383	1027	431	66	49	69	50	66	-0.072	17.34	0.32
62	9.881	9.859	0.16	0.16	1.28	77	3.11	1.08	77	2.3	90	0.098	101	100	7.3	-0.1	680	253	314	338	337	384	1036	431	66	49	69	50	66	-0.073	17.2	0.33
63	10.042	10.020	0.16	0.16	1.28	77	3.11	1.08	77	2.3	90	0.098	101	101	7.2	-0.1	686	252	316	341	339	387	1046	435	66	49	69	50	66	-0.074	17.24	0.39
64	10.202	10.180	0.16	0.16	1.28	77	3.11	1.07	77	2.3	90	0.098	100	101	7.0	-0.2	692	251	317	344	341	389	1046	436	67	49	69	50	66	-0.071	17.28	0.37
65	10.363	10.339	0.16	0.16	1.28	77	3.11	1.08	78	2.3	90	0.097	101	100	6.9	-0.1	698	250	318	346	342	391	1052	437	67	49	69	50	66	-0.072	17.26	0.47
66	10.523	10.500	0.16	0.16	1.28	77	3.13	1.08	77	2.3	90	0.097	101	102	6.8	-0.1	702	249	320	349	344	393	1038	438	67	49	69	50	66	-0.071	17.02	0.24
67	10.685	10.659	0.16	0.16	1.28	77	3.13	1.08	78	2.3	90	0.098	102	100	6.7	-0.1	706	248	321	351	346	394	1035	438	67	49	69	50	66	-0.073	16.74	0.33
68	10.846	10.819	0.16	0.16	1.27	77	3.12	1.08	78	2.3	90	0.100	100	100	6.6	-0.1	706	247	323	354	348	396	1023	435	67	49	69	50	65	-0.074	16.45	0.18
69	11.006	10.979	0.16	0.16	1.28	77	3.12	1.08	78	2.3	91	0.100	99	100	6.6	0	707	246	324	357	350	397	1013	433	67	49	69	50	65	-0.071	16.32	0.13
70	11.166	11.139	0.16	0.16	1.28	78	3.12	1.07	78	2.3	91	0.098	100	101	6.5	-0.1	707	245	326	360	352	398	1008	432	68	50	69	51	66	-0.071	15.72	0.07
71	11.327	11.299	0.16	0.16	1.28	77	3.13	1.08	78	2.3	91	0.098	101	101	6.4	-0.1	706	244	328	362	354	399	993	429	68	50	69	51	66	-0.071	15.32	0.05

Export to PDF

Wood Heater Test Data

u

Run: 5

Manufacturer: Kuma Stoves
Model: K - 181
Tracking No.: 2461
Project No.: 0123WM013E
Test Date: 19-Dec-22
Beginning Clock Time: 12:40

Total Sampling Time: 235 min
Recording Interval: 1 min
Background Sample Volume: 50.115 cubic feet

Meter Box Y Factor: 1.004 (1) 1.002 (2) 1.016 (Amb)

Barometric Pressure:	Begin	Middle	End	Average	
	30.27	30.26	30.27	30.27	0

OMNI Equipment Numbers:

PM Control Modules: 335, 00336
Dilution Tunnel MW(dry): 29.00 lb/lb-mole
Dilution Tunnel MW(wet): 28.78 lb/lb-mole
Dilution Tunnel H2O: 2.00 percent
Dilution Tunnel Static: -0.320 "H2O
Tunnel Area: 0.19625 ft2
Pitot Tube Cp: 0.99

Avg. Tunnel Velocity: 18.17 ft/sec.
Initial Tunnel Flow: 203.4 scfm
Average Tunnel Flow: 204.7 scfm
Post-Test Leak Check (1): 0.000 cfm @ 14 in. Hg
Post-Test Leak Check (2): 0.000 cfm @ 16 in. Hg
Average Test Piece Fuel Moisture: 20.26 Dry Basis %

Technician Signature:_____

Export to PDF

Velocity Traverse Data

	Pt.1	Pt.2	Pt.3	Pt.4	Pt.5	Pt.6	Pt.7	Pt.8	Center	
Initial dP	0.062	0.082	0.086	0.058	0.058	0.084	0.090	0.068	0.098	"H2O
Temp:	91	91	91	91	90	90	90	90	91	°F

V_{strav} 18.18 ft/sec V_{scent} 21.08 ft/sec F_p 0.862

	Particulate Sampling Data														Fuel Weight (lb)		Temperature Data (°F)											Stack Gas Data		
Elapsed Time (min)	Gas Meter 1 (ft^3)	Gas Meter 2 (ft^3)	Sample Rate 1 (cfm)	Sample Rate 2 (cfm)	Orifice dH 1 ("H_2O)	Meter 1 Temp (°F)	Meter 1 Vacuum ("Hg)	Orifice dH 2 ("H_2O)	Meter 2 Temp (°F)	Meter 2 Vacuum ("Hg)	Dilution Tunnel (°F)	Dilution Tunnel Center dP	Pro. Rate 1	Pro. Rate 2	Scale Reading	Weight Change	Firebox Top	Firebox Bottom	Firebox Back	Firebox Left	Firebox Right	Avg. Stove Surface	Catalyst Exit	Stack	Filter 1	Dryer Exit 1	Filter 2	Dryer Exit 2	Ambient	Draft ("H_2O)	CO_2 (%)	CO (%)
72	11.488	11.459	0.16	0.16	1.28	78	3.11	1.08	78	2.3	91	0.098	101	101	6.3	-0.1	704	244	329	365	356	400	981	425	68	50	69	51	66	-0.071	14.79	0.03
73	11.649	11.619	0.16	0.16	1.28	78	3.12	1.07	78	2.3	91	0.097	101	101	6.2	-0.1	702	243	331	367	358	400	975	422	68	50	69	51	66	-0.070	14.61	0.05
74	11.810	11.779	0.16	0.16	1.28	78	3.13	1.08	78	2.3	91	0.099	100	100	6.1	-0.1	700	242	332	370	360	401	976	421	68	50	70	51	66	-0.071	14.81	0.05
75	11.970	11.939	0.16	0.16	1.28	78	3.14	1.07	78	2.3	91	0.099	100	100	6.1	0	697	241	334	372	362	401	973	421	68	50	70	51	66	-0.071	14.96	0.05
76	12.131	12.099	0.16	0.16	1.28	78	3.12	1.07	78	2.3	91	0.098	101	101	6.0	-0.1	696	240	335	374	364	402	973	421	68	50	70	51	66	-0.071	15.23	0.04
77	12.292	12.259	0.16	0.16	1.28	78	3.12	1.08	78	2.3	91	0.098	101	101	5.9	-0.1	694	240	336	376	366	402	981	422	68	50	70	51	66	-0.070	15.53	0.07
78	12.453	12.419	0.16	0.16	1.28	78	3.13	1.08	78	2.3	91	0.098	101	101	5.8	-0.1	693	239	338	378	368	403	981	422	69	50	70	51	66	-0.071	15.99	0.07
79	12.614	12.579	0.16	0.16	1.27	78	3.12	1.07	78	2.3	91	0.099	100	100	5.7	-0.1	694	238	339	380	370	404	993	423	69	50	70	51	66	-0.071	16.73	0.16
80	12.774	12.739	0.16	0.16	1.28	78	3.13	1.08	78	2.3	91	0.099	100	100	5.6	-0.1	696	238	341	382	372	406	1003	426	69	50	70	51	66	-0.073	17.34	0.33
81	12.934	12.899	0.16	0.16	1.28	78	3.13	1.08	78	2.3	91	0.098	100	101	5.5	-0.1	697	237	342	384	374	407	1015	429	69	50	70	51	66	-0.072	17.58	0.65
82	13.095	13.060	0.16	0.16	1.28	78	3.12	1.08	78	2.3	91	0.097	101	102	5.4	-0.1	699	237	344	386	375	408	1024	432	69	50	70	51	66	-0.072	17.69	0.78
83	13.256	13.219	0.16	0.16	1.26	78	3.13	1.07	78	2.3	92	0.100	100	99	5.3	-0.1	702	236	346	388	377	410	1032	435	69	50	70	51	66	-0.073	17.77	1.04
84	13.417	13.379	0.16	0.16	1.28	78	3.13	1.08	78	2.3	92	0.099	100	100	5.2	-0.1	706	236	348	390	379	412	1036	437	69	50	70	51	66	-0.073	17.77	1.25
85	13.577	13.539	0.16	0.16	1.27	78	3.12	1.07	78	2.3	92	0.098	100	101	5.1	-0.1	709	235	350	392	381	413	1038	439	69	50	70	51	66	-0.072	17.82	1.24
86	13.738	13.699	0.16	0.16	1.28	78	3.13	1.08	78	2.3	92	0.097	101	101	5.0	-0.1	713	235	353	394	383	416	1041	442	69	50	70	51	66	-0.073	17.75	1.43
87	13.898	13.859	0.16	0.16	1.28	78	3.13	1.08	78	2.3	92	0.098	100	101	4.8	-0.2	717	235	355	396	385	418	1043	444	69	50	70	51	66	-0.074	17.71	1.57
88	14.060	14.019	0.16	0.16	1.27	78	3.14	1.07	78	2.3	91	0.098	102	101	4.7	-0.1	719	234	358	398	387	419	1044	444	69	50	70	51	66	-0.074	17.55	1.87
89	14.220	14.179	0.16	0.16	1.28	78	3.13	1.07	78	2.3	92	0.100	99	100	4.6	-0.1	722	234	361	400	389	421	1042	445	69	50	70	51	66	-0.073	17.58	1.9
90	14.381	14.339	0.16	0.16	1.27	78	3.13	1.08	78	2.3	92	0.098	101	101	4.5	-0.1	723	233	364	402	391	423	1042	444	70	50	70	51	66	-0.073	17.56	1.87
91	14.541	14.499	0.16	0.16	1.27	78	3.12	1.08	78	2.3	92	0.099	100	100	4.4	-0.1	725	233	367	404	393	424	1041	444	70	50	70	51	66	-0.073	17.51	1.65
92	14.702	14.659	0.16	0.16	1.28	78	3.12	1.08	78	2.3	92	0.099	100	100	4.3	-0.1	726	233	370	406	396	426	1041	443	70	50	70	51	66	-0.073	17.55	1.54
93	14.863	14.818	0.16	0.16	1.27	78	3.12	1.08	78	2.3	92	0.099	100	100	4.2	-0.1	727	232	373	408	398	428	1040	442	70	50	70	51	66	-0.072	17.63	1.38
94	15.024	14.979	0.16	0.16	1.28	78	3.13	1.08	78	2.3	92	0.099	100	101	4.1	-0.1	728	232	377	410	400	429	1035	440	70	50	70	51	66	-0.072	17.56	1.12
95	15.185	15.139	0.16	0.16	1.27	78	3.13	1.07	78	2.3	93	0.098	101	101	4.0	-0.1	729	232	380	412	402	431	1031	439	70	50	70	51	66	-0.072	17.46	0.93
96	15.345	15.298	0.16	0.16	1.28	78	3.14	1.08	78	2.3	92	0.099	100	100	3.9	-0.1	730	232	383	414	404	433	1028	438	70	50	70	51	66	-0.072	17.56	0.5
97	15.505	15.459	0.16	0.16	1.28	78	3.14	1.08	78	2.3	92	0.099	100	101	3.8	-0.1	730	232	386	416	406	434	1021	436	70	50	70	51	66	-0.071	17.26	0.36
98	15.666	15.619	0.16	0.16	1.28	78	3.14	1.08	78	2.3	92	0.098	101	101	3.7	-0.1	729	231	390	418	409	435	1013	434	70	50	70	51	66	-0.071	16.96	0.29
99	15.828	15.778	0.16	0.16	1.28	78	3.14	1.08	78	2.3	92	0.099	101	100	3.7	0	729	232	393	420	411	437	1003	431	70	50	70	51	66	-0.071	16.66	0.16
100	15.988	15.940	0.16	0.16	1.27	78	3.14	1.08	78	2.3	92	0.098	100	102	3.6	-0.1	727	231	396	422	413	438	995	429	70	50	70	51	66	-0.071	16.25	0.09
101	16.148	16.099	0.16	0.16	1.28	78	3.14	1.08	78	2.3	91	0.097	101	101	3.5	-0.1	724	231	400	424	415	439	984	425	70	50	70	51	66	-0.070	15.73	0.06
102	16.309	16.259	0.16	0.16	1.28	78	3.13	1.08	78	2.3	92	0.100	100	100	3.4	-0.1	721	231	403	425	417	439	975	422	70	50	70	51	66	-0.070	15.38	0.04
103	16.470	16.420	0.16	0.16	1.28	78	3.13	1.08	78	2.3	91	0.100	100	100	3.4	0	720	232	407	427	419	441	966	418	70	50	70	51	66	-0.070	14.83	0.03
104	16.631	16.579	0.16	0.16	1.28	78	3.12	1.08	78	2.3	91	0.099	100	100	3.3	-0.1	716	232	410	429	421	442	957	415	70	50	70	51	66	-0.068	14.39	0.02
105	16.792	16.739	0.16	0.16	1.28	78	3.13	1.08	78	2.3	91	0.097	101	101	3.3	0	709	232	414	430	423	442	951	412	70	50	70	51	66	-0.068	13.93	0.03
106	16.953	16.900	0.16	0.16	1.27	78	3.13	1.08	78	2.3	91	0.100	100	100	3.2	-0.1	704	232	418	432	425	442	945	409	70	50	70	52	66	-0.068	13.64	0.04
107	17.113	17.060	0.16	0.16	1.28	78	3.13	1.08	78	2.3	91	0.099	100	100	3.1	-0.1	699	232	421	433	427	442	937	405	70	50	70	52	66	-0.068	13.4	0.04

Wood Heater Test Data

u

Run: 5

Manufacturer: Kuma Stoves
Model: K - 181
Tracking No.: 2461
Project No.: 0123WM013E
Test Date: 19-Dec-22
Beginning Clock Time: 12:40

Total Sampling Time: 235 min
Recording Interval: 1 min
Background Sample Volume: 50.115 cubic feet

Meter Box Y Factor: 1.004 (1) 1.002 (2) 1.016 (Amb)

Barometric Pressure:	Begin	Middle	End	Average	
	30.27	30.26	30.27	30.27	0

OMNI Equipment Numbers:

PM Control Modules: 335, 00336
Dilution Tunnel MW(dry): 29.00 lb/lb-mole
Dilution Tunnel MW(wet): 28.78 lb/lb-mole
Dilution Tunnel H2O: 2.00 percent
Dilution Tunnel Static: -0.320 "H2O
Tunnel Area: 0.19625 ft2
Pitot Tube Cp: 0.99

Avg. Tunnel Velocity: 18.17 ft/sec.
Initial Tunnel Flow: 203.4 scfm
Average Tunnel Flow: 204.7 scfm
Post-Test Leak Check (1): 0.000 cfm @ 14 in. Hg
Post-Test Leak Check (2): 0.000 cfm @ 16 in. Hg
Average Test Piece Fuel Moisture: 20.26 Dry Basis %

Technician Signature:_____

Export to PDF

Velocity Traverse Data

	Pt.1	Pt.2	Pt.3	Pt.4	Pt.5	Pt.6	Pt.7	Pt.8	Center	
Initial dP	0.062	0.082	0.086	0.058	0.058	0.084	0.090	0.068	0.098	"H2O
Temp:	91	91	91	91	90	90	90	90	91	°F

V_{strav} 18.18 ft/sec V_{scent} 21.08 ft/sec F_p 0.862

	Particulate Sampling Data														Fuel Weight (lb)		Temperature Data (°F)												Stack Gas Data		
Elapsed Time (min)	Gas Meter 1 (ft^3)	Gas Meter 2 (ft^3)	Sample Rate 1 (cfm)	Sample Rate 2 (cfm)	Orifice dH 1 ("H_2O)	Meter 1 Temp (°F)	Meter 1 Vacuum ("Hg)	Orifice dH 2 ("H_2O)	Meter 2 Temp (°F)	Meter 2 Vacuum ("Hg)	Dilution Tunnel (°F)	Dilution Tunnel Center dP	Pro. Rate 1	Pro. Rate 2	Scale Reading	Weight Change	Firebox Top	Firebox Bottom	Firebox Back	Firebox Left	Firebox Right	Avg. Stove Surface	Catalyst Exit	Stack	Filter 1	Dryer Exit 1	Filter 2	Dryer Exit 2	Ambient	Draft ("H_2O)	CO_2 (%)	CO (%)
108	17.273	17.220	0.16	0.16	1.28	78	3.12	1.08	78	2.3	90	0.097	101	101	3.1	0	693	232	424	434	429	442	931	403	70	50	70	52	66	-0.067	13.18	0.04
109	17.434	17.381	0.16	0.16	1.27	78	3.12	1.08	78	2.3	90	0.099	100	101	3.0	-0.1	688	232	427	435	430	442	926	400	70	50	70	52	66	-0.067	13.08	0.03
110	17.596	17.540	0.16	0.16	1.27	78	3.14	1.08	78	2.3	90	0.099	101	99	3.0	0	683	233	430	436	432	443	922	399	70	50	70	52	66	-0.067	13.11	0.04
111	17.757	17.700	0.16	0.16	1.27	78	3.12	1.08	78	2.3	90	0.100	100	100	2.9	-0.1	678	233	433	437	433	443	920	397	70	50	70	52	66	-0.067	13.13	0.04
112	17.917	17.861	0.16	0.16	1.27	78	3.14	1.08	78	2.3	90	0.097	101	102	2.9	0	674	233	435	438	434	443	919	396	70	50	70	52	66	-0.066	13.27	0.04
113	18.077	18.021	0.16	0.16	1.28	78	3.13	1.07	79	2.3	90	0.098	100	100	2.8	-0.1	671	234	438	439	436	444	921	395	70	50	70	52	66	-0.066	13.25	0.05
114	18.238	18.180	0.16	0.16	1.28	78	3.12	1.08	78	2.3	89	0.099	100	99	2.8	0	669	234	440	439	437	444	917	394	70	50	70	52	66	-0.065	13.03	0.05
115	18.400	18.342	0.16	0.16	1.28	78	3.13	1.08	78	2.3	89	0.098	101	102	2.7	-0.1	666	235	443	440	437	444	919	392	70	50	70	52	66	-0.067	12.98	0.05
116	18.561	18.502	0.16	0.16	1.28	78	3.12	1.07	78	2.3	90	0.100	100	100	2.7	0	662	235	445	440	438	444	921	391	70	50	70	52	66	-0.065	12.75	0.05
117	18.722	18.661	0.16	0.16	1.27	78	3.12	1.08	78	2.3	89	0.098	101	100	2.6	-0.1	660	235	447	441	439	444	917	390	70	50	70	52	66	-0.065	12.46	0.05
118	18.882	18.822	0.16	0.16	1.28	78	3.13	1.08	78	2.3	89	0.098	100	101	2.6	0	656	235	450	441	439	444	909	388	70	50	70	52	66	-0.065	12.4	0.05
119	19.043	18.982	0.16	0.16	1.28	78	3.13	1.07	78	2.3	89	0.099	100	100	2.6	0	653	236	452	442	440	445	899	386	70	50	70	52	66	-0.065	12.34	0.05
120	19.204	19.142	0.16	0.16	1.28	78	3.13	1.08	78	2.3	89	0.099	100	100	2.5	-0.1	648	236	454	442	440	444	893	384	70	50	70	52	66	-0.065	12.18	0.05
121	19.366	19.302	0.16	0.16	1.28	78	3.12	1.08	78	2.3	89	0.098	101	100	2.5	0	645	237	457	442	441	444	886	382	70	50	70	52	66	-0.064	12.14	0.05
122	19.526	19.463	0.16	0.16	1.27	78	3.12	1.08	78	2.3	88	0.099	99	101	2.5	0	640	237	459	442	441	444	880	380	70	50	70	52	66	-0.064	11.95	0.05
123	19.686	19.623	0.16	0.16	1.28	78	3.14	1.07	78	2.3	88	0.101	98	99	2.4	-0.1	636	238	461	442	442	444	871	377	70	50	70	52	66	-0.063	11.83	0.05
124	19.847	19.783	0.16	0.16	1.28	78	3.13	1.08	79	2.3	88	0.098	101	100	2.4	0	633	239	464	442	442	444	865	376	70	50	70	52	66	-0.064	11.77	0.05
125	20.008	19.944	0.16	0.16	1.28	78	3.14	1.08	78	2.3	88	0.097	101	102	2.3	-0.1	628	239	467	442	442	444	863	374	70	50	70	52	66	-0.063	11.83	0.05
126	20.170	20.103	0.16	0.16	1.28	78	3.14	1.08	79	2.3	88	0.099	101	99	2.3	0	624	240	469	442	443	444	860	373	70	50	70	52	66	-0.063	11.92	0.05
127	20.331	20.264	0.16	0.16	1.28	78	3.12	1.08	79	2.3	88	0.100	100	100	2.3	0	620	241	472	442	443	444	858	372	70	50	70	52	66	-0.063	11.96	0.05
128	20.492	20.425	0.16	0.16	1.27	78	3.12	1.08	79	2.3	88	0.099	100	100	2.2	-0.1	617	241	475	442	443	444	856	371	70	50	70	52	65	-0.063	12.05	0.04
129	20.652	20.584	0.16	0.16	1.28	78	3.12	1.08	79	2.3	88	0.101	98	98	2.2	0	614	242	477	442	443	444	853	370	70	50	70	52	66	-0.063	12.2	0.04
130	20.813	20.745	0.16	0.16	1.28	78	3.12	1.08	79	2.3	88	0.099	100	100	2.2	0	613	243	480	442	444	444	851	369	70	50	70	52	66	-0.063	12.27	0.04
131	20.974	20.906	0.16	0.16	1.28	78	3.12	1.08	79	2.3	87	0.098	101	101	2.1	-0.1	611	243	482	442	444	444	849	368	70	50	70	52	65	-0.062	12.51	0.04
132	21.136	21.065	0.16	0.16	1.27	78	3.13	1.08	79	2.3	87	0.098	101	99	2.1	0	609	244	485	442	444	445	849	368	70	50	70	51	65	-0.062	12.76	0.03
133	21.297	21.225	0.16	0.16	1.28	78	3.12	1.08	79	2.3	87	0.099	100	100	2.0	-0.1	607	245	487	442	445	445	850	367	70	50	69	51	66	-0.062	12.8	0.03
134	21.457	21.386	0.16	0.16	1.27	78	3.12	1.08	79	2.3	87	0.098	100	101	2.0	0	604	246	490	442	445	445	852	366	70	50	70	51	66	-0.062	12.92	0.03
135	21.618	21.546	0.16	0.16	1.28	78	3.12	1.07	79	2.3	87	0.098	101	100	2.0	0	603	246	492	442	445	446	851	365	70	50	70	52	66	-0.062	12.66	0.03
136	21.779	21.706	0.16	0.16	1.28	78	3.12	1.08	79	2.3	87	0.100	100	99	1.9	-0.1	602	247	494	442	446	446	847	364	70	50	70	52	66	-0.061	12.33	0.03
137	21.940	21.867	0.16	0.16	1.28	78	3.13	1.07	79	2.3	87	0.100	100	100	1.9	0	601	248	496	441	446	446	844	363	70	50	70	52	66	-0.061	12.08	0.03
138	22.102	22.027	0.16	0.16	1.28	78	3.14	1.07	79	2.3	87	0.099	101	100	1.9	0	600	249	498	441	446	447	841	362	70	50	69	52	66	-0.061	11.8	0.04
139	22.262	22.187	0.16	0.16	1.27	78	3.13	1.08	78	2.3	87	0.097	100	101	1.8	-0.1	599	249	500	441	447	447	839	361	70	50	69	51	66	-0.061	11.29	0.04
140	22.423	22.347	0.16	0.16	1.27	78	3.14	1.08	79	2.3	86	0.099	100	100	1.8	0	599	250	501	441	447	448	839	361	70	50	69	52	66	-0.061	10.96	0.05
141	22.584	22.508	0.16	0.16	1.28	78	3.12	1.08	78	2.3	86	0.098	100	101	1.8	0	597	251	503	441	447	448	836	360	69	50	69	51	66	-0.061	10.85	0.05
142	22.745	22.668	0.16	0.16	1.28	78	3.12	1.08	79	2.3	86	0.099	100	100	1.8	0	594	252	504	441	448	448	832	359	69	50	69	52	65	-0.060	10.61	0.05
143	22.906	22.828	0.16	0.16	1.28	78	3.13	1.08	78	2.3	85	0.099	100	100	1.7	-0.1	592	252	505	441	448	448	828	358	69	50	69	52	66	-0.061	10.44	0.05

Wood Heater Test Data

u

Run: 5

Manufacturer: Kuma Stoves
Model: K - 181
Tracking No.: 2461
Project No.: 0123WM013E
Test Date: 19-Dec-22
Beginning Clock Time: 12:40

Total Sampling Time: 235 min
Recording Interval: 1 min
Background Sample Volume: 50.115 cubic feet

Meter Box Y Factor: 1.004 (1) 1.002 (2) 1.016 (Amb)

Barometric Pressure:	Begin	Middle	End	Average	
	30.27	30.26	30.27	30.27	0

OMNI Equipment Numbers:

PM Control Modules: 335, 00336
Dilution Tunnel MW(dry): 29.00 lb/lb-mole
Dilution Tunnel MW(wet): 28.78 lb/lb-mole
Dilution Tunnel H2O: 2.00 percent
Dilution Tunnel Static: -0.320 "H2O
Tunnel Area: 0.19625 ft2
Pitot Tube Cp: 0.99

Avg. Tunnel Velocity: 18.17 ft/sec.
Initial Tunnel Flow: 203.4 scfm
Average Tunnel Flow: 204.7 scfm
Post-Test Leak Check (1): 0.000 cfm @ 14 in. Hg
Post-Test Leak Check (2): 0.000 cfm @ 16 in. Hg
Average Test Piece Fuel Moisture: 20.26 Dry Basis %

Technician Signature:_____

Export to PDF

Velocity Traverse Data										
	Pt.1	Pt.2	Pt.3	Pt.4	Pt.5	Pt.6	Pt.7	Pt.8	Center	
Initial dP	0.062	0.082	0.086	0.058	0.058	0.084	0.090	0.068	0.098	"H2O
Temp:	91	91	91	91	90	90	90	90	91	°F

V_{strav} 18.18 ft/sec V_{scent} 21.08 ft/sec F_p 0.862

	Particulate Sampling Data														Fuel Weight (lb)		Temperature Data (°F)											Stack Gas Data		
Elapsed Time (min)	Gas Meter 1 (ft^3)	Gas Meter 2 (ft^3)	Sample Rate 1 (cfm)	Sample Rate 2 (cfm)	Orifice dH 1 ("H_2O)	Meter 1 Temp (°F)	Meter 1 Vacuum ("Hg)	Orifice dH 2 ("H_2O)	Meter 2 Temp (°F)	Meter 2 Vacuum ("Hg)	Dilution Tunnel (°F)	Dilution Tunnel Center dP	Pro. Rate 1	Pro. Rate 2	Scale Reading	Weight Change	Firebox Top	Firebox Bottom	Firebox Back	Firebox Left	Firebox Right	Avg. Stove Surface	Catalyst Exit	Stack	Filter 1	Dryer Exit 1	Filter 2	Dryer Exit 2	Ambient	Draft ("H_2O)	CO_2 (%)	CO (%)
144	23.068	22.989	0.16	0.16	1.28	78	3.13	1.08	78	2.3	86	0.098	101	101	1.7	0	589	253	506	440	448	447	822	357	69	50	69	51	66	-0.059	10.43	0.05
145	23.228	23.149	0.16	0.16	1.27	78	3.13	1.08	78	2.3	86	0.100	99	99	1.7	0	586	254	506	440	448	447	821	355	69	50	69	52	65	-0.060	10.42	0.05
146	23.389	23.309	0.16	0.16	1.28	78	3.12	1.08	78	2.3	86	0.099	100	100	1.7	0	583	254	507	440	448	446	818	355	69	50	69	51	66	-0.060	10.31	0.05
147	23.550	23.470	0.16	0.16	1.28	78	3.13	1.08	78	2.3	86	0.098	100	101	1.6	-0.1	582	255	507	440	448	446	814	354	69	50	69	51	66	-0.059	10.29	0.05
148	23.711	23.630	0.16	0.16	1.28	78	3.12	1.08	78	2.3	86	0.098	100	100	1.6	0	577	255	507	440	447	445	810	353	69	50	69	52	66	-0.060	10.24	0.05
149	23.873	23.790	0.16	0.16	1.28	78	3.14	1.08	79	2.3	87	0.099	101	100	1.6	0	574	256	508	439	447	445	806	352	69	50	69	52	65	-0.060	10.2	0.05
150	24.034	23.951	0.16	0.16	1.28	78	3.13	1.08	79	2.3	86	0.099	100	100	1.6	0	570	256	508	439	447	444	803	351	69	50	69	52	66	-0.060	10.15	0.05
151	24.195	24.111	0.16	0.16	1.27	78	3.12	1.08	79	2.3	86	0.098	100	100	1.6	0	567	257	508	439	447	444	800	350	69	50	69	52	66	-0.059	10.09	0.05
152	24.355	24.271	0.16	0.16	1.28	78	3.12	1.08	78	2.3	86	0.098	100	100	1.5	-0.1	564	258	508	439	447	443	798	349	69	50	69	51	65	-0.059	10.04	0.05
153	24.516	24.432	0.16	0.16	1.28	78	3.13	1.08	78	2.3	86	0.098	100	101	1.5	0	561	258	508	438	446	442	796	348	69	50	69	52	66	-0.059	9.96	0.05
154	24.677	24.592	0.16	0.16	1.28	78	3.12	1.08	78	2.3	86	0.099	100	100	1.5	0	558	259	508	438	446	442	794	347	69	50	69	52	65	-0.059	10.19	0.05
155	24.839	24.752	0.16	0.16	1.28	78	3.13	1.08	78	2.3	86	0.098	101	100	1.5	0	555	260	508	438	446	441	786	345	69	50	69	52	66	-0.059	10.14	0.04
156	25.000	24.913	0.16	0.16	1.28	78	3.12	1.08	78	2.3	85	0.100	99	100	1.5	0	552	260	508	438	446	441	780	343	69	50	69	52	66	-0.058	10.06	0.04
157	25.161	25.073	0.16	0.16	1.28	78	3.12	1.07	78	2.3	85	0.098	100	100	1.4	-0.1	549	261	507	438	445	440	778	342	69	50	69	52	66	-0.058	9.97	0.04
158	25.322	25.233	0.16	0.16	1.28	78	3.12	1.08	78	2.3	85	0.099	100	100	1.4	0	546	262	507	437	445	439	775	340	69	50	69	52	66	-0.058	9.96	0.04
159	25.482	25.393	0.16	0.16	1.28	78	3.13	1.08	79	2.3	85	0.100	99	99	1.4	0	544	262	507	437	444	439	774	340	69	50	69	52	65	-0.058	9.94	0.04
160	25.644	25.554	0.16	0.16	1.28	78	3.12	1.08	78	2.3	85	0.099	100	100	1.4	0	541	263	507	437	444	438	773	339	69	50	69	52	65	-0.058	9.92	0.05
161	25.805	25.714	0.16	0.16	1.27	78	3.12	1.08	78	2.3	84	0.098	100	100	1.4	0	540	264	507	437	444	438	772	339	69	50	69	52	66	-0.058	9.82	0.05
162	25.966	25.874	0.16	0.16	1.28	78	3.13	1.08	78	2.3	85	0.098	100	100	1.3	-0.1	539	265	506	437	443	438	770	338	69	50	69	52	65	-0.057	9.87	0.05
163	26.127	26.035	0.16	0.16	1.28	78	3.13	1.08	78	2.3	84	0.099	100	100	1.3	0	537	265	506	436	443	437	769	337	69	50	69	52	65	-0.057	9.81	0.05
164	26.288	26.195	0.16	0.16	1.28	78	3.14	1.08	78	2.3	84	0.099	100	100	1.3	0	535	266	506	436	443	437	769	336	69	50	69	52	65	-0.058	9.81	0.05
165	26.449	26.355	0.16	0.16	1.28	78	3.12	1.08	78	2.3	84	0.099	100	100	1.3	0	533	266	505	436	442	436	769	336	69	50	69	52	65	-0.057	9.8	0.05
166	26.610	26.517	0.16	0.16	1.28	78	3.12	1.08	78	2.3	84	0.102	98	99	1.3	0	530	267	505	435	442	436	770	336	69	51	69	52	66	-0.058	9.68	0.05
167	26.772	26.676	0.16	0.16	1.28	78	3.13	1.08	78	2.3	84	0.100	100	98	1.2	-0.1	528	268	505	435	442	436	770	336	69	51	69	52	66	-0.057	9.66	0.05
168	26.932	26.837	0.16	0.16	1.28	78	3.12	1.08	78	2.3	84	0.098	100	101	1.2	0	527	268	504	435	441	435	770	335	69	51	69	52	65	-0.057	9.59	0.05
169	27.093	26.998	0.16	0.16	1.27	78	3.13	1.08	78	2.3	85	0.098	100	101	1.2	0	525	269	504	434	441	435	770	334	69	51	69	52	65	-0.057	9.59	0.06
170	27.253	27.157	0.16	0.16	1.28	78	3.13	1.07	78	2.3	84	0.101	98	98	1.2	0	525	269	504	434	441	435	771	334	69	51	69	52	65	-0.057	9.56	0.06
171	27.415	27.317	0.16	0.16	1.28	78	3.12	1.08	78	2.3	84	0.099	100	100	1.2	0	523	270	503	433	440	434	771	334	69	51	69	52	66	-0.057	9.53	0.06
172	27.576	27.478	0.16	0.16	1.28	78	3.13	1.07	78	2.3	84	0.098	100	101	1.2	0	522	270	503	433	440	434	771	334	69	51	69	52	66	-0.057	9.56	0.06
173	27.737	27.639	0.16	0.16	1.28	78	3.12	1.07	78	2.3	84	0.098	100	101	1.1	-0.1	522	271	503	432	439	433	771	333	69	51	69	52	66	-0.057	9.55	0.06
174	27.898	27.799	0.16	0.16	1.27	78	3.13	1.08	78	2.3	84	0.098	100	100	1.1	0	522	271	502	432	439	433	772	333	69	51	69	52	66	-0.057	9.56	0.06
175	28.059	27.959	0.16	0.16	1.28	78	3.13	1.08	78	2.3	84	0.098	100	100	1.1	0	522	272	502	432	439	433	772	333	69	51	69	52	66	-0.057	9.55	0.06
176	28.220	28.120	0.16	0.16	1.28	78	3.12	1.08	78	2.3	84	0.099	100	100	1.1	0	521	272	501	431	438	433	773	333	69	51	69	52	65	-0.057	9.58	0.07
177	28.381	28.280	0.16	0.16	1.28	78	3.13	1.08	78	2.3	84	0.099	100	100	1.1	0	520	273	501	431	437	432	772	332	69	51	69	52	65	-0.056	9.56	0.07
178	28.543	28.440	0.16	0.16	1.28	78	3.12	1.08	78	2.3	84	0.099	100	100	1.0	-0.1	518	274	501	430	437	432	772	333	69	51	69	52	65	-0.057	9.53	0.07
179	28.704	28.601	0.16	0.16	1.28	78	3.12	1.08	78	2.3	84	0.098	100	101	1.0	0	517	274	500	429	437	431	773	332	69	51	69	52	65	-0.057	9.45	0.07

Wood Heater Test Data

u

Run: 5

Manufacturer: Kuma Stoves
Model: K - 181
Tracking No.: 2461
Project No.: 0123WM013E
Test Date: 19-Dec-22
Beginning Clock Time: 12:40

Total Sampling Time: 235 min
Recording Interval: 1 min
Background Sample Volume: 50.115 cubic feet

Meter Box Y Factor: 1.004 (1) 1.002 (2) 1.016 (Amb)

Barometric Pressure:	Begin	Middle	End	Average	
	30.27	30.26	30.27	30.27	0

OMNI Equipment Numbers:

PM Control Modules: 335, 00336
Dilution Tunnel MW(dry): 29.00 lb/lb-mole
Dilution Tunnel MW(wet): 28.78 lb/lb-mole
Dilution Tunnel H2O: 2.00 percent
Dilution Tunnel Static: -0.320 "H2O
Tunnel Area: 0.19625 ft2
Pitot Tube Cp: 0.99

Avg. Tunnel Velocity: 18.17 ft/sec.
Initial Tunnel Flow: 203.4 scfm
Average Tunnel Flow: 204.7 scfm
Post-Test Leak Check (1): 0.000 cfm @ 14 in. Hg
Post-Test Leak Check (2): 0.000 cfm @ 16 in. Hg
Average Test Piece Fuel Moisture: 20.26 Dry Basis %

Technician Signature:_____

Export to PDF

Velocity Traverse Data

	Pt.1	Pt.2	Pt.3	Pt.4	Pt.5	Pt.6	Pt.7	Pt.8	Center	
Initial dP	0.062	0.082	0.086	0.058	0.058	0.084	0.090	0.068	0.098	"H2O
Temp:	91	91	91	91	90	90	90	90	91	°F

V_{strav} 18.18 ft/sec V_{scent} 21.08 ft/sec F_p 0.862

	Particulate Sampling Data														Fuel Weight (lb)		Temperature Data (°F)											Stack Gas Data		
Elapsed Time (min)	Gas Meter 1 (ft^3)	Gas Meter 2 (ft^3)	Sample Rate 1 (cfm)	Sample Rate 2 (cfm)	Orifice dH 1 ("H_2O)	Meter 1 Temp (°F)	Meter 1 Vacuum ("Hg)	Orifice dH 2 ("H_2O)	Meter 2 Temp (°F)	Meter 2 Vacuum ("Hg)	Dilution Tunnel (°F)	Dilution Tunnel Center dP	Pro. Rate 1	Pro. Rate 2	Scale Reading	Weight Change	Firebox Top	Firebox Bottom	Firebox Back	Firebox Left	Firebox Right	Avg. Stove Surface	Catalyst Exit	Stack	Filter 1	Dryer Exit 1	Filter 2	Dryer Exit 2	Ambient	Draft ("H_2O)	CO_2 (%)	CO (%)
180	28.865	28.761	0.16	0.16	1.27	78	3.13	1.08	78	2.3	84	0.098	100	100	1.0	0	517	275	500	429	436	431	775	332	69	51	69	52	65	-0.057	9.44	0.07
181	29.025	28.921	0.16	0.16	1.28	78	3.12	1.08	78	2.3	84	0.099	99	100	1.0	0	517	275	499	428	436	431	777	332	69	51	69	52	65	-0.056	9.46	0.07
182	29.186	29.082	0.16	0.16	1.28	78	3.13	1.08	78	2.3	84	0.099	100	100	1.0	0	516	276	499	428	435	431	778	333	69	51	69	52	66	-0.057	9.43	0.07
183	29.347	29.242	0.16	0.16	1.28	78	3.12	1.08	78	2.3	84	0.100	99	99	1.0	0	516	276	499	427	435	431	779	333	69	51	69	52	65	-0.057	9.41	0.07
184	29.509	29.402	0.16	0.16	1.28	78	3.12	1.07	78	2.3	84	0.098	101	100	1.0	0	515	276	498	426	434	430	779	333	69	51	69	52	65	-0.057	9.4	0.07
185	29.670	29.563	0.16	0.16	1.28	78	3.13	1.07	78	2.3	84	0.098	100	101	0.9	-0.1	514	277	498	426	434	430	766	333	69	51	69	52	65	-0.056	9.15	0.04
186	29.830	29.723	0.16	0.16	1.28	78	3.13	1.08	78	2.3	84	0.100	99	99	0.9	0	512	277	497	425	433	429	740	329	69	51	69	52	65	-0.056	8.95	0.04
187	29.991	29.883	0.16	0.16	1.28	78	3.13	1.08	78	2.3	84	0.100	99	99	0.9	0	509	278	496	424	433	428	731	326	69	51	69	52	66	-0.056	8.88	0.05
188	30.152	30.044	0.16	0.16	1.28	78	3.11	1.08	78	2.3	84	0.099	100	100	0.9	0	506	279	495	424	432	427	728	325	69	51	69	52	66	-0.056	8.83	0.05
189	30.313	30.204	0.16	0.16	1.28	78	3.13	1.08	78	2.3	83	0.097	101	100	0.9	0	504	279	494	424	431	426	727	324	69	51	69	52	65	-0.056	8.83	0.05
190	30.475	30.364	0.16	0.16	1.28	78	3.13	1.08	78	2.3	83	0.099	100	99	0.8	-0.1	503	280	493	423	430	426	725	323	69	51	69	52	65	-0.056	8.87	0.05
191	30.636	30.525	0.16	0.16	1.28	78	3.13	1.08	78	2.3	83	0.098	100	101	0.8	0	500	280	491	423	429	425	724	322	69	51	69	52	65	-0.056	8.78	0.05
192	30.796	30.685	0.16	0.16	1.28	78	3.13	1.07	78	2.3	83	0.098	100	100	0.8	0	498	280	489	422	428	423	723	320	69	51	69	52	65	-0.056	8.78	0.05
193	30.957	30.845	0.16	0.16	1.28	78	3.12	1.08	78	2.3	83	0.099	100	99	0.8	0	495	281	487	422	427	422	724	320	69	51	69	52	65	-0.055	8.76	0.05
194	31.118	31.005	0.16	0.16	1.28	78	3.13	1.08	78	2.3	83	0.098	100	100	0.8	0	494	281	484	422	426	421	723	319	69	51	69	52	65	-0.055	8.74	0.05
195	31.279	31.166	0.16	0.16	1.27	78	3.13	1.08	78	2.3	83	0.098	100	101	0.7	-0.1	492	282	482	421	424	420	722	319	69	51	68	52	65	-0.055	8.72	0.05
196	31.441	31.326	0.16	0.16	1.28	78	3.12	1.08	78	2.3	83	0.097	101	100	0.7	0	492	282	480	421	423	420	721	318	69	51	68	52	65	-0.055	8.65	0.05
197	31.601	31.486	0.16	0.16	1.27	78	3.12	1.08	78	2.3	83	0.099	99	99	0.7	0	490	282	478	421	422	419	720	317	69	51	68	53	65	-0.055	8.59	0.05
198	31.762	31.648	0.16	0.16	1.28	78	3.12	1.08	78	2.3	83	0.099	100	101	0.7	0	488	282	475	421	421	417	719	316	69	51	68	53	65	-0.055	8.61	0.05
199	31.923	31.807	0.16	0.16	1.28	78	3.13	1.08	78	2.3	83	0.099	100	99	0.7	0	487	282	473	420	419	416	719	316	69	52	68	53	66	-0.055	8.58	0.05
200	32.084	31.968	0.16	0.16	1.28	78	3.14	1.08	78	2.3	83	0.100	99	100	0.7	0	485	283	471	420	418	415	717	315	69	52	68	53	65	-0.055	8.59	0.05
201	32.246	32.129	0.16	0.16	1.28	78	3.13	1.08	78	2.3	83	0.100	100	100	0.7	0	484	283	468	420	416	414	717	315	69	52	68	53	65	-0.055	8.57	0.06
202	32.407	32.288	0.16	0.16	1.28	78	3.13	1.08	78	2.3	83	0.098	100	99	0.7	0	483	283	466	420	415	413	715	314	69	52	68	53	65	-0.054	8.55	0.05
203	32.568	32.449	0.16	0.16	1.27	78	3.12	1.08	78	2.3	83	0.100	99	100	0.6	-0.1	482	284	464	420	414	413	713	314	69	52	68	53	65	-0.055	8.53	0.05
204	32.728	32.610	0.16	0.16	1.28	78	3.12	1.08	78	2.3	83	0.100	99	100	0.6	0	481	283	462	420	413	412	712	313	69	52	68	53	65	-0.054	8.56	0.06
205	32.889	32.770	0.16	0.16	1.29	78	3.12	1.07	78	2.3	83	0.098	100	100	0.6	0	480	284	460	419	411	411	711	312	69	52	68	53	65	-0.055	8.57	0.06
206	33.050	32.930	0.16	0.16	1.28	78	3.13	1.08	78	2.3	83	0.099	100	99	0.6	0	478	284	458	419	410	410	710	312	69	52	68	53	66	-0.054	8.57	0.06
207	33.212	33.090	0.16	0.16	1.28	78	3.13	1.08	78	2.3	82	0.101	99	98	0.6	0	477	284	456	419	409	409	711	311	69	52	68	53	66	-0.054	8.58	0.06
208	33.373	33.251	0.16	0.16	1.28	78	3.12	1.07	78	2.3	82	0.101	99	99	0.6	0	477	284	454	419	407	408	710	310	68	52	68	53	66	-0.054	8.6	0.06
209	33.534	33.411	0.16	0.16	1.28	78	3.12	1.08	78	2.3	82	0.101	99	98	0.5	-0.1	475	285	452	419	406	407	708	310	69	52	68	53	65	-0.054	8.55	0.06
210	33.695	33.571	0.16	0.16	1.28	78	3.13	1.08	78	2.3	83	0.101	99	98	0.5	0	473	285	451	419	405	407	706	309	68	52	68	53	65	-0.054	8.65	0.05
211	33.856	33.732	0.16	0.16	1.28	78	3.12	1.08	78	2.3	82	0.099	100	100	0.5	0	472	285	449	418	404	406	704	309	68	52	68	53	66	-0.054	8.67	0.06
212	34.017	33.892	0.16	0.16	1.28	78	3.12	1.08	78	2.3	82	0.098	100	100	0.5	0	471	285	448	418	403	405	703	308	68	52	68	53	65	-0.054	8.67	0.05
213	34.179	34.052	0.16	0.16	1.27	78	3.13	1.08	78	2.3	82	0.101	99	98	0.5	0	470	285	446	418	402	404	701	308	68	52	68	53	65	-0.053	8.7	0.05
214	34.339	34.213	0.16	0.16	1.28	78	3.12	1.08	78	2.3	82	0.102	97	98	0.5	0	469	285	445	418	401	404	700	307	68	52	68	53	65	-0.053	8.69	0.05
215	34.500	34.373	0.16	0.16	1.28	78	3.12	1.08	78	2.3	82	0.100	99	99	0.4	-0.1	469	286	444	417	399	403	700	306	68	52	68	53	65	-0.053	8.59	0.05

Wood Heater Test Data

u

Run: 5

Manufacturer: Kuma Stoves
Model: K - 181
Tracking No.: 2461
Project No.: 0123WM013E
Test Date: 19-Dec-22
Beginning Clock Time: 12:40

Total Sampling Time: 235 min
Recording Interval: 1 min
Background Sample Volume: 50.115 cubic feet

Meter Box Y Factor: 1.004 (1) 1.002 (2) 1.016 (Amb)

Barometric Pressure:	Begin	Middle	End	Average	
	30.27	30.26	30.27	30.27	0

OMNI Equipment Numbers:

PM Control Modules: 335, 00336
Dilution Tunnel MW(dry): 29.00 lb/lb-mole
Dilution Tunnel MW(wet): 28.78 lb/lb-mole
Dilution Tunnel H2O: 2.00 percent
Dilution Tunnel Static: -0.320 "H2O
Tunnel Area: 0.19625 ft2
Pitot Tube Cp: 0.99

Avg. Tunnel Velocity: 18.17 ft/sec.
Initial Tunnel Flow: 203.4 scfm
Average Tunnel Flow: 204.7 scfm
Post-Test Leak Check (1): 0.000 cfm @ 14 in. Hg
Post-Test Leak Check (2): 0.000 cfm @ 16 in. Hg
Average Test Piece Fuel Moisture: 20.26 Dry Basis %

Technician Signature:_____

Export to PDF

Velocity Traverse Data	Pt.1	Pt.2	Pt.3	Pt.4	Pt.5	Pt.6	Pt.7	Pt.8	Center	
Initial dP	0.062	0.082	0.086	0.058	0.058	0.084	0.090	0.068	0.098	"H2O
Temp:	91	91	91	91	90	90	90	90	91	°F

V_{strav} 18.18 ft/sec V_{scent} 21.08 ft/sec F_p 0.862

	Particulate Sampling Data														Fuel Weight (lb)		Temperature Data (°F)											Stack Gas Data		
Elapsed Time (min)	Gas Meter 1 (ft^3)	Gas Meter 2 (ft^3)	Sample Rate 1 (cfm)	Sample Rate 2 (cfm)	Orifice dH 1 ("H_2O)	Meter 1 Temp (°F)	Meter 1 Vacuum ("Hg)	Orifice dH 2 ("H_2O)	Meter 2 Temp (°F)	Meter 2 Vacuum ("Hg)	Dilution Tunnel (°F)	Dilution Tunnel Center dP	Pro. Rate 1	Pro. Rate 2	Scale Reading	Weight Change	Firebox Top	Firebox Bottom	Firebox Back	Firebox Left	Firebox Right	Avg. Stove Surface	Catalyst Exit	Stack	Filter 1	Dryer Exit 1	Filter 2	Dryer Exit 2	Ambient	Draft ("H_2O)	CO_2 (%)	CO (%)
216	34.661	34.533	0.16	0.16	1.28	78	3.11	1.08	78	2.3	82	0.100	99	99	0.4	0	468	286	443	417	399	403	700	306	68	52	68	53	65	-0.053	8.68	0.06
217	34.822	34.695	0.16	0.16	1.28	78	3.12	1.08	78	2.3	82	0.100	99	100	0.4	0	467	286	442	417	398	402	702	306	68	52	68	53	65	-0.053	8.68	0.06
218	34.983	34.854	0.16	0.16	1.28	78	3.13	1.08	78	2.3	82	0.098	100	99	0.4	0	466	287	441	417	397	402	702	306	68	52	68	53	65	-0.053	8.64	0.06
219	35.145	35.015	0.16	0.16	1.28	78	3.14	1.08	78	2.3	82	0.099	100	100	0.4	0	465	287	440	416	396	401	703	306	68	52	68	53	65	-0.054	8.56	0.06
220	35.306	35.175	0.16	0.16	1.28	78	3.12	1.08	78	2.3	82	0.099	100	99	0.4	0	464	287	439	416	395	400	702	306	68	52	68	53	65	-0.054	8.55	0.06
221	35.466	35.336	0.16	0.16	1.28	78	3.12	1.07	78	2.3	82	0.100	98	99	0.4	0	463	287	438	416	394	400	702	306	68	52	68	53	65	-0.053	8.58	0.06
222	35.627	35.495	0.16	0.16	1.28	78	3.12	1.08	78	2.3	82	0.100	99	98	0.3	-0.1	464	288	438	415	393	400	702	306	68	52	68	53	65	-0.053	8.85	0.06
223	35.788	35.656	0.16	0.16	1.28	78	3.12	1.08	78	2.3	82	0.098	100	100	0.3	0	464	288	437	415	392	399	703	305	68	52	68	53	65	-0.053	8.84	0.06
224	35.950	35.817	0.16	0.16	1.28	78	3.12	1.08	78	2.3	82	0.099	100	100	0.3	0	462	288	437	414	392	399	703	306	68	52	68	53	65	-0.053	8.83	0.06
225	36.111	35.977	0.16	0.16	1.28	78	3.13	1.08	78	2.3	82	0.097	101	100	0.3	0	462	288	436	414	391	398	703	306	68	52	68	53	65	-0.053	8.87	0.06
226	36.272	36.137	0.16	0.16	1.28	78	3.12	1.08	78	2.3	82	0.099	100	99	0.3	0	461	289	436	414	390	398	702	305	68	52	68	53	65	-0.053	8.91	0.06
227	36.433	36.298	0.16	0.16	1.28	78	3.12	1.08	78	2.3	82	0.098	100	100	0.3	0	462	289	436	413	389	398	702	305	68	52	68	53	65	-0.053	8.9	0.06
228	36.594	36.458	0.16	0.16	1.28	78	3.12	1.08	78	2.3	82	0.100	99	99	0.2	-0.1	461	290	436	412	388	397	701	305	68	52	68	53	65	-0.053	8.98	0.06
229	36.755	36.618	0.16	0.16	1.28	78	3.13	1.08	78	2.3	82	0.099	100	99	0.2	0	460	290	436	412	388	397	701	304	68	52	68	53	65	-0.053	8.95	0.06
230	36.917	36.780	0.16	0.16	1.28	78	3.12	1.08	78	2.3	82	0.098	101	101	0.2	0	461	290	435	411	387	397	702	304	68	52	68	53	65	-0.053	8.97	0.06
231	37.078	36.939	0.16	0.16	1.28	78	3.13	1.08	78	2.3	82	0.098	100	99	0.2	0	461	291	435	411	387	397	702	304	68	52	68	53	65	-0.053	8.93	0.06
232	37.239	37.100	0.16	0.16	1.27	78	3.12	1.08	78	2.3	82	0.099	100	100	0.2	0	460	291	435	411	386	397	702	305	68	52	68	54	65	-0.053	8.56	0.06
233	37.400	37.261	0.16	0.16	1.28	78	3.12	1.08	78	2.3	82	0.098	100	100	0.2	0	460	291	435	410	385	396	699	305	68	52	68	54	65	-0.053	8.85	0.06
234	37.560	37.421	0.16	0.16	1.28	78	3.13	1.08	78	2.3	82	0.101	98	98	0.1	-0.1	460	292	435	409	385	396	698	304	68	52	68	54	65	-0.053	8.65	0.06
235	37.721	37.581	0.16	0.16	1.28	78	3.13	1.08	78	2.3	82	0.100	99	99	0.0	-0.1	458	292	435	409	384	396	697	303	68	53	68	54	65	-0.053	8.63	0.06
Avg/Tot	37.721	37.581	0.16	0.16	1.27	77		1.08	77		87	0.099	100	100								44.4				50	69	51	66	-0.062		

Wood Heater Lab Data - ASTM E2780 / ASTM E2515

Manufacturer:	Kuma Stoves	Equipment Numbers:	
Model:	K - 181		
Tracking No.:	2461		
Project No.:	0123WM013E		
Run #:	5		
Date:	12/19/22		

TRAIN 1 (First Hour emissions)

Sample Component	Reagent	Filter, Probe or Dish #	Weights		
			Final, mg	Tare, mg	Particulate, mg
B. Front filter catch	Filter	E760	117.5	116.0	1.5
C. Rear filter catch	Filter	E778	116.4	116.6	-0.2
D. Probe catch*	Probe	70	116832.5	116832.5	0.0
E. Filter seals catch*	Seals	S449	3341.4	3341.0	0.4

Sub-Total	Total Particulate, mg:	1.7

TRAIN 1 (Post First Hour Change-out)

Sample Component	Reagent	Filter, Probe or Dish #	Weights		
			Final, mg	Tare, mg	Particulate, mg
B. Front filter catch	Filter	E779	117.3	117.4	-0.1
C. Rear filter catch	Filter	E780	117.2	117.1	0.1
D. Probe catch*	Probe	32	114742.4	114742.4	0.0
E. Filter seals catch*	Seals	S450	3352.0	3351.7	0.3

Sub-Total	Total Particulate, mg:	0.3

Train 1 Aggregate	Total Particulate, mg:	**2.0**

TRAIN 2

Sample Component	Reagent	Filter, Probe or Dish #	Weights		
			Final, mg	Tare, mg	Particulate, mg
A. Front filter catch	Filter	E690	123.1	121.5	1.6
B. Rear filter catch	Filter	E691	122.2	121.9	0.3
C. Probe catch*	Probe	81	111859.8	111859.7	0.1
D. Filter seals catch*	Seals	S451	4109.5	4109.3	0.2

Total Particulate, mg:	**2.2**

AMBIENT

Sample Component	Reagent	Filter # or Probe #	Weights		
			Final, mg	Tare, mg	Particulate, mg
A. Front filter catch*	Filter	E688	121.4	121.4	0.0

Total Particulate, mg:	**0.0**

*Particulate catch that results in a negative number, is assumed to be zero for probes and seals, negative numbers for filters are assumed to be part of the seal weight.

Component	Equations:
A. Front filter catch	Final (mg) - Tare (mg) = Particulate, mg
B. Rear filter catch	Final (mg) - Tare (mg) = Particulate, mg
C. Probe catch	Final (mg) - Tare (mg) = Particulate, mg

Technician Signature:_____

Wood Heater Test Results - ASTM E2780 / ASTM E2515

Manufacturer:	Kuma Stoves
Model:	K - 181
Project No.:	0123WM013E
Tracking No.:	2461
Run:	5
Test Date:	12/19/22

Burn Rate	**1.11**	**kg/hr dry**
Average Tunnel Temperature	87	degrees Fahrenheit
Average Gas Velocity in Dilution Tunnel - vs	18.17	feet/second
Average Gas Flow Rate in Dilution Tunnel - Qsd	12280.3	dscf/hour
Average Delta p	0.099	inches H20
Total Time of Test	235	minutes

	AMBIENT		SAMPLE TRAIN 1		SAMPLE TRAIN 2		FIRST HOUR FILTER (TRAIN 1)	
Total Sample Volume - Vm	50.115	cubic feet	37.721	cubic feet	37.581	cubic feet	9.562	cubic feet
Average Gas Meter Temperature	66	degrees Fahrenheit	77	degrees Fahrenheit	77	degrees Fahrenheit	75	degrees Fahrenheit
Total Sample Volume (Standard Conditions) - Vmstd	51.706	dscf	37.751	dscf	37.506	dscf	9.604	dscf
Total Particulates - m_n	0	mg	2	mg	2.2	mg	1.7	mg
Particulate Concentration (dry-standard) - C_r/C_s	0.000000	grams/dscf	0.00005	grams/dscf	0.00006	grams/dscf	0.00018	grams/dscf
Total Particulate Emissions - E_T	0.00	grams	2.55	grams	2.82	grams	2.17	grams
Particulate Emission Rate	0.00	grams/hour	0.65	grams/hour	0.72	grams/hour	2.17	grams/hour
Emissions Factor			0.59	g/kg	0.65	g/kg	1.44	g/kg
Difference from Average Total Particulate Emissions			0.14	grams	0.14	grams		
	Dual Train Comparison Results Are Acceptable							

FINAL AVERAGE RESULTS

Complete Test Run		
Total Particulate Emissions - E_T	2.68	grams
Particulate Emission Rate	**0.69**	**grams/hour**
Emissions Factor	0.62	grams/kg
First Hour Emissions		
Total Particulate Emissions - E_T	2.17	grams
Particulate Emission Rate	2.17	grams/hour
Emissions Factor	1.44	grams/kg
7.5% of Average Total Particulate Emissions	0.20	grams

QUALITY CHECKS

Filter Temps < 90 °F	OK
Filter Face Velocity (47 mm)	OK
Dryer Exit Temp < 80F	OK
Leakage Rate	OK
Ambient Temp (55-90°F)	OK
Negative Probe Weight Eval.	OK
Pro-Rate Variation	OK
Stove Surface ΔT	OK
Train Precesion 7.5%	5.09
Train Precision 0.5g/kg	0.06

Technician Signature:_____

Wood Heater Lab Data - ASTM E2780 / ASTM E2515

Manufacturer:	Kuma Stoves	Equipment Numbers:	
Model:	K - 181		
Tracking No.:	2461		
Project No.:	0123WM013E		
Run #:	5		
Date:	12/19/22		

Uncorrected

TRAIN 1 (First Hour emissions)

Sample Component	Reagent	Filter, Probe or Dish #	Weights		
			Final, mg	Tare, mg	Particulate, mg
B. Front filter catch	Filter	E760	117.5	116.0	1.5
C. Rear filter catch	Filter	E778	116.4	116.6	0.0
D. Probe catch*	Probe	70	116832.5	116832.5	0.0
E. Filter seals catch*	Seals	S449	3341.4	3341.0	0.4

Sub-Total	Total Particulate, mg:	1.9

TRAIN 1 (Post First Hour Change-out)

Sample Component	Reagent	Filter, Probe or Dish #	Weights		
			Final, mg	Tare, mg	Particulate, mg
B. Front filter catch	Filter	E779	117.3	117.4	0.0
C. Rear filter catch	Filter	E780	117.2	117.1	0.1
D. Probe catch*	Probe	32	114742.4	114742.4	0.0
E. Filter seals catch*	Seals	S450	3352.0	3351.7	0.3

Sub-Total	Total Particulate, mg:	0.4

Train 1 Aggregate	Total Particulate, mg:	**2.3**

TRAIN 2

Sample Component	Reagent	Filter, Probe or Dish #	Weights		
			Final, mg	Tare, mg	Particulate, mg
A. Front filter catch	Filter	E690	123.1	121.5	1.6
B. Rear filter catch	Filter	E691	122.2	121.9	0.3
C. Probe catch*	Probe	81	111859.8	111859.7	0.1
D. Filter seals catch*	Seals	S451	4109.5	4109.3	0.2

Total Particulate, mg:	**2.2**

AMBIENT

Sample Component	Reagent	Filter # or Probe #	Weights		
			Final, mg	Tare, mg	Particulate, mg
A. Front filter catch*	Filter	E688	121.4	121.4	0.0

Total Particulate, mg:	**0.0**

*Particulate catch that results in a negative number, is assumed to be zero for probes and seals, negative numbers for filters are assumed to be part of the seal weight.

Component	Equations:
A. Front filter catch	Final (mg) - Tare (mg) = Particulate, mg
B. Rear filter catch	Final (mg) - Tare (mg) = Particulate, mg
C. Probe catch	Final (mg) - Tare (mg) = Particulate, mg

Technician Signature:_____

Wood Heater Test Results - ASTM E2780 / ASTM E2515

Manufacturer:	Kuma Stoves
Model:	K - 181
Project No.:	0123WM013E
Tracking No.:	2461
Run:	5
Test Date:	12/19/22

Burn Rate	**1.11 kg/hr dry**
Average Tunnel Temperature	87 degrees Fahrenheit
Average Gas Velocity in Dilution Tunnel - vs	18.17 feet/second
Average Gas Flow Rate in Dilution Tunnel - Qsd	12280.3 dscf/hour
Average Delta p	0.099 inches H20
Total Time of Test	235 minutes

Uncorrected

	AMBIENT	SAMPLE TRAIN 1	SAMPLE TRAIN 2	FIRST HOUR FILTER (TRAIN 1)
Total Sample Volume - Vm	50.115 cubic feet	37.721 cubic feet	37.581 cubic feet	9.562 cubic feet
Average Gas Meter Temperature	66 degrees Fahrenheit	77 degrees Fahrenheit	77 degrees Fahrenheit	75 degrees Fahrenheit
Total Sample Volume (Standard Conditions) - Vmstd	51.706 dscf	37.751 dscf	37.506 dscf	9.604 dscf
Total Particulates - m_n	0 mg	2.3 mg	2.2 mg	1.9 mg
Particulate Concentration (dry-standard) - C_r/C_s	0.000000 grams/dscf	0.00006 grams/dscf	0.00006 grams/dscf	0.00020 grams/dscf
Total Particulate Emissions - E_T	0.00 grams	2.93 grams	2.82 grams	2.43 grams
Particulate Emission Rate	0.00 grams/hour	0.75 grams/hour	0.72 grams/hour	2.43 grams/hour
Emissions Factor		0.68 g/kg	0.65 g/kg	1.61 g/kg
Difference from Average Total Particulate Emissions		0.05 grams	0.05 grams	

Dual Train Comparison Results Are Acceptable

FINAL AVERAGE RESULTS

Complete Test Run	
Total Particulate Emissions - E_T	2.88 grams
Particulate Emission Rate	**0.73 grams/hour**
Emissions Factor	0.66 grams/kg
First Hour Emissions	
Total Particulate Emissions - E_T	2.43 grams
Particulate Emission Rate	2.43 grams/hour
Emissions Factor	1.61 grams/kg
7.5% of Average Total Particulate Emissions	0.22 grams

QUALITY CHECKS

Filter Temps < 90 °F	OK
Filter Face Velocity (47 mm)	OK
Dryer Exit Temp < 80F	OK
Leakage Rate	OK
Ambient Temp (55-90°F)	OK
Negative Probe Weight Eval.	OK
Pro-Rate Variation	OK
Stove Surface ΔT	OK
Train Precesion 7.5%	1.90
Train Precision 0.5g/kg	0.03

Technician Signature:_____

VERSION: 2.4 4/15/2010

Manufacturer: Kuma Industries
Model: K-181
Date: 12/19/2022
Run: 5
Control #: 0123WM013E
Test Duration: 235
Output Category: 2

Appliance Type: Cat (Cat, Non-Cat, Pellet)

Temp. Units F (F or C)
Weight Units lb (kg or lb)

Wood Moisture (% wet): 16.85
Load Weight (lb wet): 11.50
Burn Rate (dry kg/h): 1.11
Total Particulate Emissions: 2.68 g

Fuel Data

	D. Fir	
HHV	19,810	kJ/kg
%C	48.73	
%H	6.87	
%O	43.9	
%Ash	0.5	

Default Fuel Values

	D. Fir	Oak
HHV (kJ/kg)	19,810	19,887
%C	48.73	50
%H	6.87	6.6
%O	43.9	42.9
%Ash	0.5	0.5

Note 1: For other fuels, use the heating value and fuel composition determined by analysis of fuel sample in accordance with Clause 9.2.

Note 2: In cases where the "Fuel Weight Remaining" is the same for three or more readings in a row, a "divide by zero error" will occur in the calculation sheet. In such cases, adjust the weight values by interpolation between the first occurence and the next reading showing a decrease in weight.

						Temp. (ºF)	
	Averages	0.19	11.19	#DIV/0!	364.29	65.76	
Elapsed Time (min)	Fuel Weight Remaining (lb)	Flue Gas Composition (%) CO	CO_2	O_2	Flue Gas	Room Temp	
0	11.50	0.28	2.71		353.0	68.0	
1	11.50	0.27	0.86		348.0	68.0	
2	11.30	0.17	6.08		379.0	67.0	
3	11.20	0.08	6.86		441.0	68.0	
4	11.10	0.08	7.32		469.0	67.0	
5	11.10	0.04	6.34		398.0	67.0	
6	11.10	0.03	5.03		367.0	67.0	
7	11.00	0.03	4.93		349.0	66.0	
8	11.00	0.03	5.06		339.0	66.0	
9	11.00	0.03	5.61		333.0	67.0	
10	10.90	0.03	5.65		331.0	66.0	
11	10.90	0.03	5.65		328.0	67.0	
12	10.90	0.03	5.87		326.0	66.0	
13	10.80	0.04	5.98		325.0	67.0	
14	10.80	0.04	6.53		326.0	67.0	
15	10.70	0.03	6.86		329.0	67.0	
16	10.70	0.04	7.21		330.0	66.0	
17	10.60	0.04	7.15		331.0	66.0	
18	10.60	0.04	7.03		333.0	66.0	

19	10.50	0.04	6.96		335.0	66.0
20	10.50	0.05	7.15		336.0	66.0
21	10.40	0.04	7.11		335.0	66.0
22	10.40	0.04	7.12		336.0	66.0
23	10.30	0.04	7.03		336.0	66.0
24	10.30	0.04	7.22		335.0	66.0
25	10.20	0.05	7.25		336.0	66.0
26	10.20	0.05	7.31		338.0	66.0
27	10.10	0.05	7.22		339.0	66.0
28	10.10	0.05	7.11		339.0	66.0
29	10.00	0.05	7.09		338.0	66.0
30	10.00	0.05	7.07		339.0	66.0
31	9.90	0.05	7.27		339.0	66.0
32	9.90	0.05	7.54		340.0	66.0
33	9.80	0.05	7.36		341.0	66.0
34	9.80	0.05	7.67		342.0	66.0
35	9.70	0.05	7.82		343.0	66.0
36	9.70	0.05	8.10		345.0	66.0
37	9.60	0.06	8.46		347.0	66.0
38	9.60	0.06	8.46		350.0	66.0
39	9.50	0.06	8.67		352.0	66.0
40	9.40	0.07	11.29		357.0	66.0
41	9.40	0.07	11.26		363.0	66.0
42	9.30	0.06	10.91		369.0	66.0
43	9.20	0.07	11.68		374.0	66.0
44	9.10	0.07	13.27		379.0	66.0
45	9.00	0.07	13.18		383.0	66.0
46	9.00	0.07	14.05		387.0	66.0
47	8.90	0.14	14.89		392.0	66.0
48	8.80	0.44	15.36		397.0	66.0
49	8.70	1.07	15.86		402	66
50	8.50	0.93	16.13		407	66
51	8.40	1.23	16.33		413	66
52	8.30	1.26	16.57		416	66
53	8.20	0.76	16.36		418	66
54	8.10	0.9	16.36		420	65
55	8.00	0.62	16.23		420	66
56	7.90	0.34	15.93		421	66
57	7.80	0.24	16.14		422	66

58	7.70	0.33	16.57		424	66
59	7.60	0.64	17.29		427	66
60	7.50	0.79	17.35		429	66
61	7.40	0.32	17.34		431	66
62	7.30	0.33	17.2		431	66
63	7.20	0.39	17.24		435	66
64	7.00	0.37	17.28		436	66
65	6.90	0.47	17.26		437	66
66	6.80	0.24	17.02		438	66
67	6.70	0.33	16.74		438	66
68	6.60	0.18	16.45		435	65
69	6.60	0.13	16.32		433	65
70	6.50	0.07	15.72		432	66
71	6.40	0.05	15.32		429	66
72	6.30	0.03	14.79		425	66
73	6.20	0.05	14.61		422	66
74	6.10	0.05	14.81		421	66
75	6.10	0.05	14.96		421	66
76	6.00	0.04	15.23		421	66
77	5.90	0.07	15.53		422	66
78	5.80	0.07	15.99		422	66
79	5.70	0.16	16.73		423	66
80	5.60	0.33	17.34		426	66
81	5.50	0.65	17.58		429	66
82	5.40	0.78	17.69		432	66
83	5.30	1.04	17.77		435	66
84	5.20	1.25	17.77		437	66
85	5.10	1.24	17.82		439	66
86	5.00	1.43	17.75		442	66
87	4.80	1.57	17.71		444	66
88	4.70	1.87	17.55		444	66
89	4.60	1.9	17.58		445	66
90	4.50	1.87	17.56		444	66
91	4.40	1.65	17.51		444	66
92	4.30	1.54	17.55		443	66
93	4.20	1.38	17.63		442	66
94	4.10	1.12	17.56		440	66
95	4.00	0.93	17.46		439	66
96	3.90	0.5	17.56		438	66

97	3.80	0.36	17.26		436	66
98	3.70	0.29	16.96		434	66
99	3.70	0.16	16.66		431	66
100	3.60	0.09	16.25		429	66
101	3.50	0.06	15.73		425	66
102	3.40	0.04	15.38		422	66
103	3.40	0.03	14.83		418	66
104	3.30	0.02	14.39		415	66
105	3.30	0.03	13.93		412	66
106	3.20	0.04	13.64		409	66
107	3.10	0.04	13.4		405	66
108	3.10	0.04	13.18		403	66
109	3.00	0.03	13.08		400	66
110	3.00	0.04	13.11		399	66
111	2.90	0.04	13.13		397	66
112	2.90	0.04	13.27		396	66
113	2.80	0.05	13.25		395	66
114	2.80	0.05	13.03		394	66
115	2.70	0.05	12.98		392	66
116	2.70	0.05	12.75		391	66
117	2.60	0.05	12.46		390	66
118	2.60	0.05	12.4		388	66
119	2.60	0.05	12.34		386	66
120	2.50	0.05	12.18		384	66
121	2.50	0.05	12.14		382	66
122	2.50	0.05	11.95		380	66
123	2.40	0.05	11.83		377	66
124	2.40	0.05	11.77		376	66
125	2.30	0.05	11.83		374	66
126	2.30	0.05	11.92		373	66
127	2.30	0.05	11.96		372	66
128	2.20	0.04	12.05		371	65
129	2.20	0.04	12.2		370	66
130	2.20	0.04	12.27		369	66
131	2.10	0.04	12.51		368	65
132	2.10	0.03	12.76		368	65
133	2.00	0.03	12.8		367	66
134	2.00	0.03	12.92		366	66
135	2.00	0.03	12.66		365	66

136	1.90	0.03	12.33		364	66
137	1.90	0.03	12.08		363	66
138	1.90	0.04	11.8		362	66
139	1.80	0.04	11.29		361	66
140	1.80	0.05	10.96		361	66
141	1.80	0.05	10.85		360	66
142	1.80	0.05	10.61		359	65
143	1.70	0.05	10.44		358	66
144	1.70	0.05	10.43		357	66
145	1.70	0.05	10.42		355	65
146	1.70	0.05	10.31		355	66
147	1.60	0.05	10.29		354	66
148	1.60	0.05	10.24		353	66
149	1.60	0.05	10.2		352	65
150	1.60	0.05	10.15		351	66
151	1.60	0.05	10.09		350	66
152	1.50	0.05	10.04		349	65
153	1.50	0.05	9.96		348	66
154	1.50	0.05	10.19		347	65
155	1.50	0.04	10.14		345	66
156	1.50	0.04	10.06		343	66
157	1.40	0.04	9.97		342	66
158	1.40	0.04	9.96		340	66
159	1.40	0.04	9.94		340	65
160	1.40	0.05	9.92		339	65
161	1.40	0.05	9.82		339	66
162	1.30	0.05	9.87		338	65
163	1.30	0.05	9.81		337	65
164	1.30	0.05	9.81		336	65
165	1.30	0.05	9.8		336	65
166	1.30	0.05	9.68		336	66
167	1.20	0.05	9.66		336	66
168	1.20	0.05	9.59		335	65
169	1.20	0.06	9.59		334	65
170	1.20	0.06	9.56		334	65
171	1.20	0.06	9.53		334	66
172	1.20	0.06	9.56		334	66
173	1.10	0.06	9.55		333	66
174	1.10	0.06	9.56		333	66

175	1.10	0.06	9.55		333	66
176	1.10	0.07	9.58		333	65
177	1.10	0.07	9.56		332	65
178	1.00	0.07	9.53		333	65
179	1.00	0.07	9.45		332	65
180	1.00	0.07	9.44		332	65
181	1.00	0.07	9.46		332	65
182	1.00	0.07	9.43		333	66
183	1.00	0.07	9.41		333	65
184	1.00	0.07	9.4		333	65
185	0.90	0.04	9.15		333	65
186	0.90	0.04	8.95		329	65
187	0.90	0.05	8.88		326	66
188	0.90	0.05	8.83		325	66
189	0.90	0.05	8.83		324	65
190	0.80	0.05	8.87		323	65
191	0.80	0.05	8.78		322	65
192	0.80	0.05	8.78		320	65
193	0.80	0.05	8.76		320	65
194	0.80	0.05	8.74		319	65
195	0.70	0.05	8.72		319	65
196	0.70	0.05	8.65		318	65
197	0.70	0.05	8.59		317	65
198	0.70	0.05	8.61		316	65
199	0.70	0.05	8.58		316	66
200	0.70	0.05	8.59		315	65
201	0.70	0.06	8.57		315	65
202	0.70	0.05	8.55		314	65
203	0.60	0.05	8.53		314	65
204	0.60	0.06	8.56		313	65
205	0.60	0.06	8.57		312	65
206	0.60	0.06	8.57		312	66
207	0.60	0.06	8.58		311	66
208	0.60	0.06	8.6		310	66
209	0.50	0.06	8.55		310	65
210	0.50	0.05	8.65		309	65
211	0.50	0.06	8.67		309	66
212	0.50	0.05	8.67		308	65
213	0.50	0.05	8.7		308	65

214	0.50	0.05	8.69		307	65
215	0.40	0.05	8.59		306	65
216	0.40	0.06	8.68		306	65
217	0.40	0.06	8.68		306	65
218	0.40	0.06	8.64		306	65
219	0.40	0.06	8.56		306	65
220	0.40	0.06	8.55		306	65
221	0.40	0.06	8.58		306	65
222	0.30	0.06	8.85		306	65
223	0.30	0.06	8.84		305	65
224	0.30	0.06	8.83		306	65
225	0.30	0.06	8.87		306	65
226	0.30	0.06	8.91		305	65
227	0.30	0.06	8.9		305	65
228	0.20	0.06	8.98		305	65
229	0.20	0.06	8.95		304	65
230	0.20	0.06	8.97		304	65
231	0.20	0.06	8.93		304	65
232	0.20	0.06	8.56		305	65
233	0.20	0.06	8.85		305	65
234	0.10	0.06	8.65		304	65
235	0.00	0.06	8.63		303	65

ABC Laboratories, Inc.

Manufacturer: Kuma Industries
Model: K-181
Date: 12/19/22
Run: 5
Control #: 0123WM013E
Test Duration: 235
Output Category: 2

Technicians: _____

_____

_____

Test Results in Accordance with CSA B415.1-10

	HHV Basis	LHV Basis
Overall Efficiency	76.8%	83.0%
Combustion Efficiency	98.3%	98.3%
Heat Transfer Efficiency	78%	84.5%

Output Rate (kJ/h)	16,856	15,990	**(Btu/h)**
Burn Rate (kg/h)	1.11	2.44	**(lb/h)**
Input (kJ/h)	21,944	20,816	**(Btu/h)**

Test Load Weight (dry kg)	4.34	9.56	**dry lb**
MC wet (%)	16.85		
MC dry (%)	20.26		
Particulate (g)	2.68		
CO (g)	114		
Test Duration (h)	3.92		

Emissions	Particulate	CO
g/MJ Output	0.04	1.73
g/kg Dry Fuel	0.62	26.33
g/h	0.68	29.16
lb/MM Btu Output	0.09	4.02

Air/Fuel Ratio (A/F)	9.94

VERSION: **2.4** **4/15/2010**

6OMNI-Test Laboratories, Inc. **ASTM E2780 Wood Heater Run Sheets**

Client: Kuma Project Number: 0123WM013E Run Number: 5

Model: K-181 Tracking Number: 2461 Date: 12/19/2022

Test Crew: TT, BD

OMNI Equipment ID numbers: 00637, 00709, 00283A

ASTM E2515 Lab Sheet

Assembled By:

Tony Tong

Date/Time in Dessicator:

12/19/2022, 17:00

	Weighing #1	Weighing #2	Weighing #3	Weighing #4	Weighing #5
Date/Time:	12/21/22 10:00	12/22/22 9:00	12/22/22 15:10		
R/H %:	11.2	8.0	9.6		
Temp:	64.7	58.8	61.5		
200 mg Audit:	200.1	200.0	200.0		
2 g Audit:	2000.3	2000.3	2000.3		
100 g Audit:	99998.0	99997.9	99997.9		
Initials:	TT	TT	TT		

Train	Element	ID #	Tare (mg)	Weight (mg)	Weight (mg)	Weight (mg)	Weight (mg)	Weight (mg)
A (First Hour)	Front Filter	E760	116.0 ✓	117.7	117.4	117.5 ✓		
	Rear Filter	E778	116.6 ✓	116.2	116.4 ✓			
	Probe	70	116832.5 ✓	116832.6	116832.5 ✓			
	O-Ring Set	S449	3341.0 ✓	3341.9	3341.4 ✓	3341.4 ✓		
A (Remainder)	Front Filter	E779	117.4 ✓	117.4	117.3 ✓			
	Rear Filter	E780	117.1 ✓	117.1	117.2 ✓			
	Probe	32	114742.4 ✓	114742.4	114742.4 ✓			
	O-Ring Set	S450	3351.7 ✓	3352.4	3352.0 ✓	3352.0 ✓		
B	Front Filter	E690	121.5 ✓	123.2	123.1 ✓			
	Rear Filter	E691	121.9 ✓	122.0	122.2 ✓			
	Probe	81	111859.7 ✓	111859.7	111859.8 ✓			
	O-Ring Set	S451	4109.3 ✓	4109.7	4109.4 ✓	4109.5 ✓		
BG	Filter	E688	121.4 ✓	121.2	121.4 ✓			

Technician Signature: Tony Tong Date: 12/22/2022

OMNI-Test Laboratories, Inc. **ASTM E2780 Wood Heater Run Sheets**

Client: Kuma Stoves, Inc. Project Number: 0123WM013E Run Number: 5

Model: K-181 Series Tracking Number: 2461 Date: 12/19/2022

Test Crew: TT, BD

OMNI Equipment ID numbers: 00335, 00336, 00596, 00185

Wood Heater Run Notes

Air Control Settings

Primary:

Air setting @ 1/8" open

Secondary: Fixed

Tertiary/Pilot: N/A

Fan: Not used

Preburn Notes

Time	Notes
8:30	Loading first rick and kindling (9.0 lbs + 6.0 lbs)
10:00	Loading second rick 9.5 lbs at 1.2 lbs coal
11:04	Adding Preburn load 9.6 lbs at 1.5 lbs coal
11:36	Recording the preburn at 5.7 lbs, air was set at 1/8" open

Test Notes

Sketch test fuel configuration:

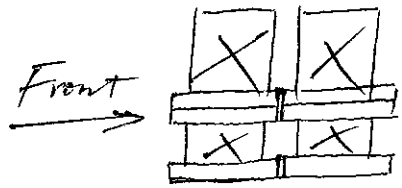

Start up procedures & Timeline:

Bypass: Used for fuel loading

Fuel loaded by: 60 seconds

Door closed at: 80 seconds

Primary air: Open for 4 mins

Notes:

Time	Notes
12:40	Test started
13:40	First hour filters changed
16:35	Test ended

Technician Signature: Tony Fong Date: 12/19/22

OMNI-Test Laboratories, Inc. **ASTM E2780 Wood Heater Run Sheets**

Client: Kuma Stoves, Inc. Project Number: 0123WM013E Run Number: 5

Model: K-181 Series Tracking Number: 2461 Date: 12/19/2022

Test Crew: TT, BD

OMNI Equipment ID numbers: 00596, 00335, 00336, 00322, 00410, 00716, 00255, 00677

Wood Heater Supplemental Data

Start Time: 12:40

Stop Time: 16:35

Booth #: E1

Stack Gas Leak Check:

Initial: good Final: good

Sample Train Leak Check:

A_1: 0.000 @ 14.63 "Hg

A: 0.000 @ 14.5 "Hg

B: 0.000 @ 16.35 "Hg

Calibrations: Span Gas CO_2: 16.94/10.08 CO: 4.32/2.53

	Pre Test		Post Test	
	Zero	Span	Zero	Span
Time	11:37	11:39	16:46	16:49
CO_2	0.00	16.93/10.07	0.06	16.85/10.04
CO	0.00	4.33/2.51	0.00	4.22/2.44

Air Velocity (ft/min): Initial: <50 Final: <50

Scale Audit (lbs): Initial: 10 Final: 10

Pitot Tube Leak Test: Initial: good Final: good

Stack Diameter (in): 6

Induced Draft: 0.001

% Smoke Capture: 100

Flue Pipe Cleaned Prior to First Test in Series:

Date: 12/01/22 Initials: TT

	Initial	Middle	Ending
P_b (in/Hg)	30.27	30.26	30.27
RH (%)	37%	37%	37%
Ambient (°F)	69	66	65

Tunnel Traverse

Microtector Reading	dP (in H_2O)	T(°F)
1	.062	91
2	.082	91
3	.086	91
4	.058	91
5	.058	90
6	.084	90
7	.090	90
8	.068	90
Center:		
	0.98	91

Tunnel Static Pressure (in H_2O):	
Beginning of Test	End of Test
−0.32	−0.32

Background Filter Volume: 50.115 ft^3

Technician Signature: Tony Tong Date: 12/19/2022

OMNI-Test Laboratories, Inc. **ASTM E2780 Wood Heater Run Sheets**

Client: Kuma Stoves, Inc. Project Number: 0123WM013E Run Number: 5

Model: K-181 Series Tracking Number: 2461 Date: 12/19/2022

Test Crew: TT, B.D

OMNI Equipment ID numbers: 00340, 00431, T61, 00353

Wood Heater Fuel Data

Fuel: Douglas fir, untreated and air dried, standard grade or better dimensional lumber

Pre-Burn Fuel

Calibration: Cal Value (1) = 12% Actual Reading 12.9

Cal Value (2) = 22% Actual Reading 22.3

Piece:	Length:	Reading:	Piece:	Length:	Reading:
1	10 in	19.1	7	12 in	19.0
2	12 in	23.1	8	____ in	____
3	12 in	22.2	9	____ in	____
4	12 in	24.5	10	____ in	____
5	12 in	22.5	11	____ in	____
6	12 in	23.1	12	____ in	____

Total Pre-Burn Fuel Weight: 9.6 lbs Pre-Burn Fuel Average Moisture: ____

Time (clock): 9:50 Room Temperature (F): 65 Initials: TT

Test Fuel

Firebox Volume (ft³): 1.731

Load Weight Range (lb): (10.9, 13.3)

Test Fuel Piece Length (in): 15.25

Total Wet Fuel Load Weight (lb): 11.5 (12.3, 12.9)

Fuel Type & Amount: 2 x 4: 2 4 x 4: 2

Weight (with spacers): 4.3 lbs Weight (with spacers): 7.2 lbs

Piece:	Weight (lbs):	Moisture Readings (%DB):				Fuel Type:
1	1.7	19.1	19.4	20.3		2x4
2	1.7	19.5	21.7	22.4		2x4
3	2.9	19.8	19.3	19.3		4x4
4	3.9	21.4	21.1	23.3		4x4
5	____	____	____	____		____
6	____	____	____	____		____
7	____	____	____	____		____

Spacer Moisture Readings (%DB)

19.2	18.6	20.3	20.8	18.8	20.4	20.6	19.7
10.7	11.5	7.3	13.7	____	____	____	____
____	____	____	____	____	____	____	____
____	____	____	____	____	____	____	____

Time (clock): 10:10 Room Temperature (F): 65 Initials: TT

Technician Signature: Tony Tong Date: 12/19/22

Section 3

QUALITY ASSURANCE / QUALITY CONTROL

QUALITY ASSURANCE/QUALITY CONTROL

OMNI follows the guidelines of ISO/IEC 17025, "General Requirements for the Competence of Testing and Calibration Laboratories," and the quality assurance/quality control (QA/QC) procedures found in *OMNI*'s Quality Assurance Manual.

OMNI's scope of accreditation includes, but is not limited to, the following:

- ANSI (American National Standards Institute) for certification of product to safety standards.
- To perform product safety testing by the International Accreditation Service, Inc. (formerly ICBO ES) under accreditation as a testing laboratory designated TL-130.
- To perform product safety testing as a "Certification Organization" by the Standards Council of Canada (SCC).
- Serving as a testing laboratory for the certification of wood heaters by the U.S. Environmental Protection Agency.

This report is issued within the scope of *OMNI*'s accreditation. Accreditation certificates are available upon request.

The manufacturing facilities and quality control system for the production of the Apex NexGen-Hybrid at Travis Industries, Inc. were evaluated to determine if sufficient to maintain conformance with OMNI's requirements for product certification. OMNI has concluded that the manufacturing facilities, processes, and quality control system are adequate to produce the appliance congruous with the standards and model codes to which it was evaluated.

This report shall not be reproduced, except in full, without the written approval of OMNI-Test Laboratories, Inc.

Sample Analysis

Analysis of Worksheets
Tared Filter, Probe, and O-Ring Data

6OMNI-Test Laboratories, Inc. **ASTM E2780 Wood Heater Run Sheets**

Client: Kuma Project Number: 0123WM013E Run Number: 1

Model: K-181 Tracking Number: 2461 Date: 12/12/2022

Test Crew: TT, BD

OMNI Equipment ID numbers: 00637, 00709, 00283A

ASTM E2515 Lab Sheet

Assembled By:

Tony Tong

Date/Time in Dessicator:

12/12/22, 16:15

	Weighing #1	Weighing #2	Weighing #3	Weighing #4	Weighing #5
Date/Time:	12/14/22, 14:40	12/20/22 9:30			
R/H %:	12.8	9.6			
Temp:	68.5	63.3			
200 mg Audit:	199.9	200.1			
2 g Audit:	2000.2	2000.3			
100 g Audit:	99997.9	99997.9			
Initials:	TT	TT			

Train	Element	ID #	Tare (mg)	Weight (mg)	Weight (mg)	Weight (mg)	Weight (mg)	Weight (mg)
A (First Hour)	Front Filter	E844	118.9 ✓	120.4	120.4			
	Rear Filter	E845	118.4 ✓	118.4	118.4			
	Probe	68	116877.7 ✓	116877.8 ✓	116877.8			
	O-Ring Set	S437	3451.3 ✓	3451.5	3451.5			
A (Remainder)	Front Filter	E846	118.4 ✓	118.1	118.0			
	Rear Filter	E847	118.5 ✓	118.3	118.3			
	Probe	13	114320.8 ✓	114321.1	114321.1			
	O-Ring Set	S438	3413.9 ✓	3414.3	3414.4			
B	Front Filter	~~E848~~ 858	~~118.5~~ 119.0 ✓	120.3	120.2			
	Rear Filter	E849	119.3 ✓	119.3	119.3			
	Probe	78	117458.9 ✓	117459.2	117459.1			
	O-Ring Set	S439	3374.4 ✓	3375.0	3374.8			
BG	Filter	E851	118.9 ✓	118.7	118.7			

Technician Signature: Tony Tong Date: 12/20/2022

6OMNI-Test Laboratories, Inc. **ASTM E2780 Wood Heater Run Sheets**

Client: Kuma Project Number: 0123WM013E Run Number: 2

Model: K-181 Tracking Number: 2461 Date: 12/13/2022

Test Crew: TT, BD

OMNI Equipment ID numbers: 00637, 00709, 00283A

ASTM E2515 Lab Sheet

Assembled By:

Tony Tong

Date/Time in Dessicator:

12/13/22, 17:30

	Weighing #1	Weighing #2	Weighing #3	Weighing #4	Weighing #5
Date/Time:	12/21/22, 9:00	12/21/22, 10:00	12/22/22 9:00	12/22/22 15:10	
R/H %:	9.6	11.2	8.0	9.6	
Temp:	63.3	64.7	58.8	61.5	
200 mg Audit:	200.1	200.1	200.0	200.0	
2 g Audit:	2000.3	2000.3	2000.3	2000.3	
100 g Audit:	99997.9	99998.0	99997.9	99997.9	
Initials:	TT	TT	TT	TT	

Train	Element	ID #	Tare (mg)	Weight (mg)	Weight (mg)	Weight (mg)	Weight (mg)	Weight (mg)
A (First Hour)	Front Filter	E852	119.5 ✓	120.4	120.4 ✓			
	Rear Filter	E853	117.8 ✓	117.7	117.7 ✓			
	Probe	76	116960.4 ✓	116960.9	116960.8 ✓			
	O-Ring Set	S440	3341.9 ✓	3342.5	3342.3 ✓			
A (Remainder)	Front Filter	E854	119.3 ✓	120.7	120.7 ✓			
	Rear Filter	E855	119.3 ✓	119.0	118.9 ✓			
	Probe	84	117635.4 ✓	117635.6	117635.5 ✓			
	O-Ring Set	S441	3277.5 ✓	3278.3	3278.3 ✓			
B	Front Filter	E856	118.8 ✓	121.2	121.2 ✓			
	Rear Filter	E857	118.1 ✓	118.2	118.2 ✓			
	Probe	66	118454.9 ✓	118455.0	118455.3 ✓	118452.9	118455.0 ✓	
	O-Ring Set	S442	3283.1 ✓	3283.8	3283.8 ✓			
BG	Filter	E858	116.9 ✓	116.7	116.7 ✓			

Technician Signature: Tony Tong Date: 12/22/2022

6OMNI-Test Laboratories, Inc. **ASTM E2780 Wood Heater Run Sheets**

Client: Kuma Project Number: 0123WM013E Run Number: 3

Model: K-181 Tracking Number: 2461 Date: 12/14/2022

Test Crew: TT, BD

OMNI Equipment ID numbers: 00637, 00709, 00283A

ASTM E2515 Lab Sheet

Assembled By:

Tony Tong

Date/Time in Dessicator:

12/14/22, 17:55

	Weighing #1	Weighing #2	Weighing #3	Weighing #4	Weighing #5
Date/Time:	12/20/22 9:00	12/21/22 10:00			
R/H %:	9.6	11.2			
Temp:	63.3	64.7			
200 mg Audit:	200.1	200.1			
2 g Audit:	2000.3	2000.3			
100 g Audit:	99997.9	99998.0			
Initials:	TT	TT			

Train	Element	ID #	Tare (mg)	Weight (mg)	Weight (mg)	Weight (mg)	Weight (mg)	Weight (mg)
A (First Hour)	Front Filter	E859	118.7 ✓	119.8	119.6 ✓			
	Rear Filter	E860	118.9 ✓	118.8	118.8 ✓			
	Probe	65	117078.7 ✓	117078.8	117079.0 ✓			
	O-Ring Set	S443	3363.1 ✓	3363.5	3363.4 ✓			
A (Remainder)	Front Filter	E730	120.8 ✓	123.4	123.4 ✓			
	Rear Filter	E731	121.2 ✓	120.9	120.8 ✓			
	Probe	4	114855.1 ✓	114855.5	114855.6 ✓			
	O-Ring Set	S444	3363.9 ✓	3364.5	3364.6 ✓			
B	Front Filter	E732	120.8 ✓	124.6	124.4 ✓			
	Rear Filter	E733	120.2 ✓	120.5	120.3 ✓			
	Probe	17	114561.5 ✓	114561.7	114561.7 ✓			
	O-Ring Set	S445	3397.3 ✓	3397.5	3397.3 ✓			
BG	Filter	E734	121.2 ✓	121.0	121.1 ✓			

Technician Signature: Tony Tong Date: 12/21/2022

6OMNI-Test Laboratories, Inc. **ASTM E2780 Wood Heater Run Sheets**

Client: Kuma Project Number: 0123WM013E Run Number: 4

Model: K-181 Tracking Number: 2461 Date: 12/15/2022

Test Crew: TT, BD

OMNI Equipment ID numbers: 20637, 00709, 00283A

ASTM E2515 Lab Sheet

Assembled By:

Tony Tong

Date/Time in Dessicator:

12/15/2022, 15:30

	Weighing #1	Weighing #2	Weighing #3	Weighing #4	Weighing #5
	Date/Time: 12/20/22 9:00	Date/Time: 12/21/22 10:00	Date/Time: 12/22/22 9:00	Date/Time:	Date/Time:
	R/H %: 9.6	R/H %: 11.2	R/H %: 8.0	R/H %:	R/H %:
	Temp: 63.3	Temp: 64.7	Temp: 58.8	Temp:	Temp:
	200 mg Audit: 200.1	200 mg Audit: 200.1	200 mg Audit: 200.0	200 mg Audit:	200 mg Audit:
	2 g Audit: 2000.3	2 g Audit: 2000.3	2 g Audit: 2000.3	2 g Audit:	2 g Audit:
	100 g Audit: 99997.9	100 g Audit 99998.0	100 g Audit 99997.9	100 g Audit	100 g Audit
	Initials: TT	Initials: TT	Initials: TT	Initials:	Initials:

Train	Element	ID #	Tare (mg)	Weight (mg)	Weight (mg)	Weight (mg)	Weight (mg)	Weight (mg)
A (First Hour)	Front Filter	E735	116.4 ✓	118.0	118.0			
	Rear Filter	E736	116.9 ✓	116.4	116.4			
	Probe	2	115012.2 ✓	115012.3	115012.3			
	O-Ring Set	S446	4053.5 ✓	4054.5	4054.6			
A (Remainder)	Front Filter	E738	117.1 ✓	117.2	116.9	117.1		
	Rear Filter	E739	115.9 ✓	115.7	115.7			
	Probe	3	116011.1 ✓	116011.3	116011.2			
	O-Ring Set	S447	3268.8 ✓	3269.3	3269.4			
B	Front Filter	E740	117.5 ✓	118.9	119.1			
	Rear Filter	E757	115.6 ✓	115.5	115.7			
	Probe	15	114340.3 ✓	114340.4	114340.4			
	O-Ring Set	S448	3300.8 ✓	3301.4	3301.5			
BG	Filter	E759	116.7 ✓	116.8	116.7			

Technician Signature: Tony Tong Date: 12/28/2022

6OMNI-Test Laboratories, Inc. **ASTM E2780 Wood Heater Run Sheets**

Client: Kuma Project Number: 0123WM013E Run Number: 5

Model: K-181 Tracking Number: 2461 Date: 12/19/2022

Test Crew: TT, BD

OMNI Equipment ID numbers: 00637, 00709, 00283A

ASTM E2515 Lab Sheet

Assembled By:

Tony Tong

Date/Time in Dessicator:

12/19/2022, 17:00

	Weighing #1	Weighing #2	Weighing #3	Weighing #4	Weighing #5
Date/Time:	12/21/22 10:00	12/22/22 9:00	12/22/22 15:10		
R/H %:	11.2	8.0	9.6		
Temp:	64.7	58.8	61.5		
200 mg Audit:	200.1	200.0	200.0		
2 g Audit:	2000.3	2000.3	2000.3		
100 g Audit:	99998.0	99997.9	99997.9		
Initials:	TT	TT	TT		

Train	Element	ID #	Tare (mg)	Weight (mg)	Weight (mg)	Weight (mg)	Weight (mg)	Weight (mg)
A (First Hour)	Front Filter	E760	116.0 ✓	117.7	117.4	117.5		
	Rear Filter	E778	116.6 ✓	116.2	116.4			
	Probe	70	116832.5 ✓	116832.6	116832.5			
	O-Ring Set	S449	3341.0 ✓	3341.9	3341.4	3341.4		
A (Remainder)	Front Filter	E779	117.4 ✓	117.4	117.3			
	Rear Filter	E780	117.1 ✓	117.1	117.2			
	Probe	32	114742.4 ✓	114742.4	114742.4			
	O-Ring Set	S450	3351.7 ✓	3352.4	3352.0	3352.0		
B	Front Filter	E690	121.5 ✓	123.2	123.1			
	Rear Filter	E691	121.9 ✓	122.0	122.2			
	Probe	81	111859.7 ✓	111859.7	111859.8			
	O-Ring Set	S451	4109.3 ✓	4109.7	4109.4	4109.5		
BG	Filter	E688	121.4 ✓	121.2	121.4			

Technician Signature: Tony Tong Date: 12/22/2022

Tare Sheet: (check one) **Probes**_____ **47mm Filters** X **100mm Filters**_____ **O-Ring Pair**_____

Prepared By: Riley Tiegs Balance ID #: 637 Thermohygrometer ID #: 709 Audit Weight ID #/Mass: 283A 1

Placed in Dessicator: Date: 09-06-22 Time: 1220	Date: 09-07-2022 Time: 12:40 RH %: 24.0 T (°F): 77.7 Audit: 200.1	Date: 09-08-2022 Time: 12:45 RH %: 25.3 T (°F): 75.7 Audit: 200.0	Date: Time: RH %: T (°F): Audit:	Date: Time: RH %: T (°F): Audit:	Date Used	Project Number	Run No.
ID #							
E741	115.5	115.5✓					
E742	117.2	117.3✓					
E743	116.1	116.0✓					
E744	117.5	117.4✓					
E745	117.4	117.4✓					
E746	115.7	115.7✓					
E747	116.1	116.1✓					
E748	117.3	117.4✓					
E749	116.0	116.1✓					
E750	117.5	117.7✓					
E751	115.4	115.6✓					
E752	117.2	117.1✓					
E753	116.2	116.2✓					
E754	117.7	117.6✓					
E755	116.2	116.3✓					
E756	117.0	116.8✓					
E757	115.6	115.6✓			12/15/2022	0123 WM013E	4
E758	117.2	117.3✓			Not used		
E759	~~115.9~~ 116.6 RT	116.7✓			12/15/2022	0123 WM013E	4
E760	115.9	116.0✓			12/19/2022	0123 WM013E	5
	Initials: RT	Initials: RT	Initials:	Initials:			

Final Technician Signature: _____ Date: 09-08-2022 Evaluator signature: _____

Tare Sheet: (check one) **Probes**____ **47mm Filters** X **100mm Filters**____ **O-Ring Pair**____

Prepared By: Balance ID #: 687 Thermohygrometer ID #: 709 Audit Weight ID #/Mass: 283A 1

Placed in Dessicator: Date: 5-10-22 Time: 1038	Date: 6-8-22 Time: 14:05 RH %: 27.3 T (°F): 74.0	Date: ~~6-9-22~~ 6-9-22 Time: 1445 RH %: 28.0	Date: 6-13-22 Time: 0930 RH %: 14.2 T (°F): 69.4	Date: Time: RH %: T (°F):	Date Used	Project Number	Run No.
ID #	Audit: 200.1	Audit: 200.1	Audit: 200.0	Audit:			
E681	121.9	121.8✓					
E682	121.0	120.8✓					
E683	121.3	121.2✓					
E684	120.6	120.5✓					
E685	121.6	121.1	121.2✓				
E686	121.1	120.9✓					
E687	121.0	120.9✓					
E688	121.6	121.4✓			12/19/2022	0123WM013E	5
E689	121.1	120.7	120.7✓				
E690	122.0	121.4	121.5✓		12/19/2022	0123WM013E	5
E691	122.3	121.8	121.9✓				
E692	120.8	120.6✓					
E693	121.0	120.5	120.7✓				
E694	120.1	119.9✓					
E695	122.1	121.3	121.4✓				
E696	120.7	120.2	120.3✓				
E697	120.5	120.3✓					
E698	121.1	120.9✓					
E699	120.6	120.2	120.3✓				
E700	121.3	121.1✓					
	Initials: RO	Initials: RO	Initials: RL	Initials:			

Final Technician Signature: Date: 7-5-2022 Evaluator signature:

Control No. P-SFDP-0002.xls, Effective date: 2/1/2017

Tare Sheet: (check one) Probes_____ 47mm Filters X 100mm Filters_____ O-Ring Pair_____

Prepared By: Riley Tiegs Balance ID #: 637 Thermohygrometer ID #: 709 Audit Weight ID #/Mass: 283A 1 N

Placed in Dessicator: Date: 12.20 Time: 09-06-22 ID #	Date: 09-07-22 Time: 12:40 RH %: 24.0 T (°F): 77.7 Audit: 200.1	Date: 09-08-22 Time: 12:45 RH %: 25.3 T (°F): 75.7 Audit: 200.0	Date: 09-12-22 Time: 12:40 RH %: 23.8 T (°F): 76.2 Audit: 200.1	Date: Time: RH %: T (°F): Audit:	Date Used	Project Number	Run No.
E761	117.6	117.7 ✓					
E762	116.6	116.6 ✓					
E763	117.8	117.7 ✓					
E764	117.4	117.5 ✓					
E765	116.5	116.5 ✓					
E766	116.3	116.4 ✓					
E767	116.6	116.5 ✓					
E768	116.6	116.8 ✓					
E769	116.1	116.1 ✓					
E770	116.9	117.0 ✓					
E771	116.5	116.4 ✓					
E772	117.1	117.3 ✓					
E773	117.2	117.3 ✓					
E774	116.3	116.3 ✓					
E775	117.2	117.3 ✓					
E776	117.1	117.2 ✓					
E777	117.4	118.2	118.0 ✓				
E778	116.7	116.6 ✓			12/19/2022	0123WM013E	5
E779	117.4	117.4 ✓			↓	↓	↓
E780	117.0	117.1 ✓					
	Initials: RT	Initials: RT	Initials: RT	Initials:			

Final Technician Signature: _____ Date: ~~09-09~~ 09/12-22 Evaluator signature: _____

Control No. P-SFDP-0002.xls, Effective date: 2/1/2017

Tare Sheet: (check one) Probes_____ 47mm Filters ✓ 100mm Filters_____ O-Ring Pair_____

Prepared By: Tony Tong Balance ID #: 00637 Thermohygrometer ID #: 00709 Audit Weight ID #/Mass: 00283 A 1200 mg

Placed in Dessicator: Date: 05/10/22 Time: 10:38

ID #	Date: 06/08/22 Time: 16:30 RH %: 16.5 T (°F): 75.7 Audit: 200.1	Date: 06/13/22 Time: 16:20 RH %: 14.3 T (°F): 71.4 Audit: 200.0	Date: 06/16/22 Time: 7:20 RH %: 18.6 T (°F): 71.7 Audit: 199.9	Date: Time: RH %: T (°F): Audit:	Date Used	Project Number	Run No.
E721	121.3	121.3					
E722	121.6	121.3	121.3				
E723	122.0	121.9					
E724	121.5	121.3					
E725	121.5	121.6					
E726	121.3	121.3					
E727	121.7	121.5					
E728	121.2	121.0					
E729	122.0	121.8					
E730	120.9	120.8			12/14/2022	0123WM013E	3
E731	121.1	121.2			↓	↓	↓
E732	120.9	120.8					
E733	120.4	120.2					
E734	121.3	121.2			↓	↓	↓
E735	116.5	116.4			12/15/2022	0123WM013E	4
E736	116.9	116.9			↓	↓	↓
E737	115.9	115.5			Not used		
E738	117.2	117.1			12/15/2022	0123WM013E	4
E739	116.0	115.9			↓	↓	↓
E740	117.4	117.5			↓	↓	↓
	Initials: TT	Initials: TT	Initials: TT	Initials:			

Final Technician Signature: Tony Tong Date: 06/16/2022 Evaluator signature: Kelly Mayo

Tare Sheet: (check one) Probes_____ **47mm Filters** ✓ **100mm Filters**_____ **O-Ring Pair**_____

Prepared By: Riley Tiegs Balance ID #: 637 Thermohygrometer ID #: 709 Audit Weight ID #/Mass: 283A 1

Placed in Dessicator: Date: ~~11.03.22~~ 11.03.22 Time: 0900 ID #	Date: 11-09-22 Time: 0843 RH %: 24.4 T (°F): 64.9 Audit: 199.9	Date: 11-10-22 Time: 1000 RH %: 26.7 T (°F): 65.6 Audit: 200.0	Date: Time: RH %: T (°F): Audit:	Date: Time: RH %: T (°F): Audit:	Date Used	Project Number	Run No.
E841	118.6	118.6 ✓					
E842	118.2	118.3 ✓					
E843	118.6	118.7 ✓					
E844	118.8	118.9 ✓			12/12/2022	0123 WM 013 E	1
E845	118.5	118.4 ✓			↓	↓	↓
E846	118.5	118.4 ✓					
E847	118.5	118.5 ✓					
E848	118.4	118.5 ✓			Not used		
~~E849~~ E849	119.4	119.3 ✓			12/12/2022	0123 WM 013 E	1
E850	119.1	119.0 ✓			↓	↓	↓
E851	119.0	118.9 ✓					
E852	119.5	119.5 ✓			12/13/2022	0123 WM 013 E	2
E853	117.7	117.8 ✓			↓	↓	↓
E854	119.4	119.3 ✓					
E855	119.3	119.3 ✓					
E856	118.9	118.8 ✓					
E857	118.1	118.1 ✓					
E858	117.0	116.9 ✓					
E859	118.7	118.7 ✓			12/14/2022	0123 WM 013 E	3
E860	118.9	118.9 ✓			↓	↓	↓
	Initials: RD	Initials: RT	Initials:	Initials:			

Final Technician Signature: _____ Date: 11.22.2022 Evaluator signature: _____

Tare Sheet: (check one) **Probes** ✓ **47mm Filters**____ **100mm Filters**____ **O-Ring Pair**____

Prepared By: Tony Tong Balance ID #: 00637 Thermohygrometer ID #: 00709 Audit Weight ID #/Mass: 00283A 1 100g

Placed in Dessicator: Date: 11/28/22 Time: 10:00 ID #	Date: 12/08/22 Time: 9:15 RH %: 8.0 T (°F): 63.1 Audit: 99998.1	Date: 12/12/22 Time: 7:30 RH %: 13.7 T (°F): 60.9 Audit: 99997.8	Date: Time: RH %: T (°F): Audit:	Date: Time: RH %: T (°F): Audit:	Date Used	Project Number	Run No.
68	116877.9	116877.7			12/12/2022	0123WM013E	1
13	114320.9	114320.8			↓	↓	↓
78	117459.1	117458.9			↓	↓	↓
84	117635.5	117635.4			12/13/2022	0123WM013E	2
76	116960.5	116960.4			↓	↓	↓
66	118455.0	118454.9			↓	↓	↓
65	117078.8	117078.7			12/14/2022	0123WM013E	3
17	114561.5	114561.5			↓	↓	↓
4	114855.1	114855.1			↓	↓	↓
3	116011.0	116011.1			12/15/2022	0123WM013E	4
2	115012.2	115012.2			↓	↓	↓
15	114340.4	114340.3			↓	↓	↓
70	116832.7	116832.5			12/19/2022	0123WM013E	5
OES6	113708.4	113708.5					
62	117662.6	117662.5					
14	114546.9	114546.8					
81	111859.9	111859.7			12/19/2022	0123WM013E	5
32	114742.4	114742.4			↓	↓	↓
75	117637.7	117637.6					
OES4	114147.7	114147.7					
	Initials: TT	Initials: TT	Initials:	Initials:			

Final Technician Signature: Tony Tong Date: 12/12/22 Evaluator signature: K.J. Morga

Tare Sheet: (check one) Probes_____ 47mm Filters_____ 100mm Filters_____ O-Ring Pair ✓

Prepared By: Tony Tong Balance ID #: 00637 Thermohygrometer ID #: 0709 Audit Weight ID #/Mass: 00283 A 1 5g

Placed in Dessicator: Date: 11/10/22 Time: 16:30 ID #	Date: 12/08/22 Time: 9:40 RH %: 8.0 T (°F): 63.1 Audit: 4999.9	Date: 12/12/22 Time: 7:50 RH %: 13.7 T (°F): 60.9 Audit: 5000.0	Date: Time: RH %: T (°F): Audit:	Date: Time: RH %: T (°F): Audit:	Date Used	Project Number	Run No.
S 437	3451.4	3451.3			12/12/2022	0123WM013E	1
S 438	3416.0	3413.9			↓	↓	↓
S 439	3374.5	3374.4			↓	↓	↓
S 440	3341.9	3341.9			12/13/2022	0123WM013E	2
S 441	3277.6	3277.5			↓	↓	↓
S 442	3283.2	3283.1			↓	↓	↓
S 443	3363.3	3363.1			12/14/2022	0123WM013E	3
S 444	3363.9	3363.9			↓	↓	↓
S 445	3396.9	3397.0			↓	↓	↓
S 446	4053.7	4053.5			12/15/2022	0123WM013E	4
S 447	3268.9	3268.8			↓	↓	↓
S 448	3300.8	3300.8			↓	↓	↓
S 449	3341.0	3341.0			12/19/2022	0123WM013E	5
S 450	3351.8	3351.7			↓	↓	↓
S 451	4109.3	4109.3			↓	↓	↓
S 452	3227.9	3227.7					
S 453	3337.3	3337.2					
S 454	3310.7	3316.7					
S 455	4203.7	4203.7					
S 456	3415.4	3415.3					
	Initials: TT	Initials: TT	Initials:	Initials:			

Final Technician Signature: Tony Tong Date: 12/12/22 Evaluator signature: M. Morgan

Calibrations

ASTM E2515, ASTM E2780

ID #	Lab Name/Purpose	Log Name	Attachment Type
255	10 lb Weight	Weight Standard, 10 lb.	Calibration Certificate (07/06/2021)
185	Platform Scale	WI-127	Calibration Certificate 09/01/2022
716	Digital Barometer	Traceable Barometer	Calibration Certificate (04/19/2022)
283A	Audit Weights	Troemner 21pc Msas Set	Calibration Certificate (10/26/2018)
335	Sample Box / Dry Gas Meter	Apex Automated Emissions Sampling Box	Calibration Log (10/18/2022)
336	Sample Box / Dry Gas Meter	Apex Automated Emissions Sampling Box	Calibration Log (10/18/2022)
410	Microtector	Dwyer Microtector	Calibration Certificate (03/01/2022)
677	Dwyer Anemometer	Dwyer Anemometer	Calibration Certificate (01/06/2022)
709	RH-81 Humidity Meter	RH-81 Humidity Meter	Calibration Log (01/27/2021)
594	Combustion Gas Analyzer	CAI Gas Analyzer	See Run Sheet (VBU)
637	Milligram Balance	Analytical Balance - Mettler - Toledo	Calibration Certificate (07/27/2022)
322	Ambient Dry Gas Meter	MC563 Source Sampler	Calibration Log (07/19/2022)
353	Scale (lbs)	MTW-150K	Calibration Certificate (11/30/2022)
431	Moisture Calibrator	Delmhorst moisture Content Standard	Calibration Certificate (11/12/2022)

Certificate of Calibration

Certificate Number: 749605

JJ Calibrations, Inc.
7724 SE Aspen Summit Drive
Portland, OR 97266-9217
Phone 503.786.3005
FAX 503.786.2994

Omni-Test Laboratories
13327 NE Airport Way
Portland, OR 97230

ACCREDITED
0723.01
Calibration

PO: 210356
Order Date: 05/28/2021
Authorized By: N/A

Property #: OMNI-00255
User: N/A
Department: N/A
Make: Rice Lake
Model: 10 Lbs. (Class F)
Serial #: OMNI-00255
Description: Mass
Procedure: DCN 500901
Accuracy: Class F (±450mg)

Calibrated on: 07/06/2021
*Recommended Due: 07/06/2026
Environment: 20 °C 52 % RH
* As Received: Within Tolerance
* As Returned: Within Tolerance
Action Taken: Calibrated
Technician: 126

Remarks: * Many factors may cause the unit to drift out of calibration before the recommended due date. Any reported error is the absolute value between the reference and the unit. Uncertainties include the effects of the unit.

This mass meets class F specifications.
Received/returned without accessories.

Standards Used

Std ID	Manufacturer	Model	Nomenclature	Due Date	Trace ID
256A	Rice Lake	W0133K	Mass Set,	09/18/2022	741788
484A	Rice Lake	1kg-10kg (Class ASTM 1)	Mass Set,	07/02/2023	748551
550A	And (A&D) Co.	HP-30K	Balance 30 Kg	12/31/2021	739307

Measurement Data

Parameter / Measurement Description	Range	Unit	Reference	Min	Max	*Error	UUT	Uncertainty
Before/After								Accredited = ü
Mass								
10 Lbs.		g	4535.92400000	4535.47400004	4536.3740000	0.2288327	4536.1528327 g	3.5E-01 ü

This instrument has been calibrated in accordance with the JJ Calibrations Quality Assurance Manual and is traceable to either the SI or to National Institute of Standards and Technology (NIST). The quality system and this certificate are in compliance with ANSI/NCSL Z540-1-1994, ISO/IEC 17025-2017, ISO 10012-1, the ISO 9000 family and QS 9000. The expanded uncertainties of measurements for this calibration are based upon 95% (2 sigma) confidence limits. Unless stated in the comments, certificates reflect the "Simple Acceptance Rule" as specified by JCGM 106:2012. Unless otherwise stated, a test accuracy ratio (TAR) of 4:1, if achievable, is maintained. The results reported herein apply only to the calibration of the item described above. This report may not be reproduced, except in full, without written approval of JJ Calibrations.

Reviewer

3 Issued 07/08/2021 Rev # 15

Inspector

Established 1974

QUALITY CONTROL SERVICES

LABORATORY EQUIPMENT • SALES • SERVICE • CALIBRATION • REPAIRS

2340 SE 11TH Ave. Portland, Oregon 97214 • Box 14831 Portland, Oregon 97293

(503) 236-2712 • FAX (503) 235-2535 • www.qc-services.com

A2LA ACCREDITED
CERTIFICATE #1550.01

OMNI-Test Laboratories, Inc.
13327 NE Airport Way
Portland, OR 97230

Report Number: OMNE03005547220901

A2LA ACCREDITED
CERTIFICATE OF CALIBRATION WITH DATA

INSTRUMENT INFORMATION

Item	Make	Model	Serial Number	Customer ID	Location
Scale	Weigh-Tronix	WI-127 1000x0.1lb	005547	185	Lab
Units	**Readability**	**SOP**	**Cal Date**	**Last Cal Date**	**Cal Due Date**
lbs	0.1	QC033	9/1/22	9/21/21	9/2023

FUNCTIONAL CHECKS

SHIFT TEST	LINEARITY	REPEATABILITY	ENVIRONMENTAL CONDITIONS
Test Wt: 500 / Tol: 0.5	Test Wt: HB44 / Tol: HB44	Test Wt: 200 / Tol: 0.2	☐ Good ☑ Fair ☐ Poor
As-Found: Pass:☑ Fail:☐	As-Found: Pass:☑ Fail:☐	As-Found: Pass:☑ Fail:☐	Temperature: 23.8°C
As-Left: Pass:☑ Fail:☐	As-Left: Pass:☑ Fail:☐	As-Left: Pass:☑ Fail:☐	

CALIBRATION DATA

Standard	As-Found	As-Left	Expanded Uncertainty
1000	1000.2	1000.2	0.05
700	700.2	700.2	0.05
500	500.1	500.1	0.05
200	200.0	200.0	0.05
100	100.0	100.0	0.05
50	50.0	50.0	0.05

CALIBRATION STANDARDS

Item	Make	Model	Serial Number	Cal Date	Cal Due Date	NIST ID
Avoirdupois Cast W	Rice Lake	25 and 50lb	PWO990-CA	7/18/22	7/2024	20221688

Permanent Information Concerning this Equipment:
Old s/n 21676

Comments/Information Concerning this Calibration
9/22 RH= 56%.

Report prepared/reviewed by: JC **Date:** 9/1/22 **Technician:** J Colacchio **Signature:**

THIS CERTIFICATE SHALL NOT BE REPRODUCED, EXCEPT IN FULL, WITHOUT THE APPROVAL OF QUALITY CONTROL SERVICES, INC.

The uncertainty is calculated according to the ISO Guide to the Expression of Uncertainty in Measurement and includes the uncertainty of standards used combined with the observed standard deviation of the unit under test. The uncertainty is expanded with a k factor of 2 for an approximate 95% level of confidence. Instruments listed above were calibrated using standards traceable to the National Institute of Standards and Technology (NIST). Calibration data reflect results at the time and location of calibration. Calibration data should be reviewed to insure that the instrument is performing to its required accuracy. Calibrations comply with ISO/IEC 17025 and ANSI/Z540-1-1994 quality standards.

PT ID: OMNE03

ACCREDITED
A2LA Certificate No. 1750.01
Calibration

Calibration complies with ISO/IEC 17025, ANSI/NCSL Z540-1, and 9001

Cert. No.: 6530-13314053

Traceable® Certificate of Calibration for Digital Barometer

Manufactured for and distributed by : Traceable® Products 12554 Galveston Rd B230, Webster, TX 77598

Instrument Identification:

Model: 6530,68000-49 S/N: 221461635 Manufacturer: Control Company

Standards/Equipment:

Description	Serial Number	Due Date	NIST Traceable Reference
Digital Barometer	D4540001	29 Nov 2022	1000474068
Chilled Mirror Hygrometer	44654/2H3737	13 Dec 2023	19994
Climate Chamber	W619.0019		
Digital Thermometer	210888692	18 Oct 2022	12739668

Certificate Information:

Technician: 57 Procedure: CAL-31 Cal Date: 19 Apr 2022 Cal Due Date: 19 Apr 2024

Test Conditions: 48.96%RH 24.99°C 1020mBar

Calibration Data: (New Instrument)

Unit(s)	Nominal	As Found	In Tol	Nominal	As Left	In Tol	Min	Max	±U	TUR
%RH	N.A.	N.A.		50.02	51	Y	47	53	0.74	>4:1
°C	N.A.	N.A.		25.24	25.2	Y	24.84	25.64	0.05	>4:1
mb/hPa	N.A.	N.A.		805.26	806	Y	801	809	0.62	>4:1
mb/hPa	N.A.	N.A.		910.02	911	Y	906	914	0.62	>4:1
mb/hPa	N.A.	N.A.		1014.65	1015	Y	1011	1019	0.62	>4:1

This certificate indicates Traceability to standards provided by (NIST) National Institute of Standards and Technology and/or a National Standards Laboratory.

A Test Uncertainty Ratio of at least 4:1 is maintained unless otherwise stated and is calculated using the expanded measurement uncertainty. Uncertainty evaluation includes the instrument under test and is calculated in accordance with the ISO "Guide to the Expression of Uncertainty in Measurement : (GUM). The uncertainty represents an expanded uncertainty using a coverage factor k=2 to approximate a 95% confidence level. In tolerance conditions are based on test results falling within specified limits with no reduction by the uncertainty of the measurement. The results contained herein relate only to the item calibrated. This certificate shall not be reproduced except in full, without written approval of Control Company.

Nominal=Standard's Reading; As Left=Instrument's Reading; In Tol=In Tolerance; Min/Max=Acceptance Range; ± U=Expanded Measurement Uncertainty; TUR=Test Uncertainty Ratio; Accuracy=±(Max-Min)/2; Min=As Left Nominal(Rounded) – Tolerance; Max= As Left Nominal(Rounded) + Tolerance;

Nicol Rodriguez

Nicol Rodriguez, Quality Manager

Marisa Elms

Marisa Elms, Technical Manager

Note :

Maintaining Accuracy:

In our opinion once calibrated your Digital Barometer should maintain its accuracy. There is no exact way to determine how long calibration will be maintained. Digital Barometer change little, if any at all, but can be affected by aging, temperature, shock, and contamination.

Recalibration:

For factory calibration and re-certification traceable to National Institute of Standards and Technology contact Control Company.

Issue Date : 19 Apr 2022

CONTROL COMPANY 12554 Galveston RD Suite B230 Webster TX USA 77598
Phone 281 482-1714 Fax 281 482-9448 sales@control3.com www.traceable.com

Control Company is an ISO/IEC 17025:2017 Calibration Laboratory Accredited by (A2LA) American Association for Laboratory Accreditation, Certificate No. 1750.01.
Control Company is ISO 9001:2015 Quality Certified by DNV GL, Certificate No. CERT-01805-2006-AQ-HOU-ANAB.
International Laboratory Accreditation Cooperation - Multilateral Recognition Arrangement (ILAC-MRA).

Traceable® is a registered trademark of Control Company

© 2017 Control Company

Certificate of Calibration

Certificate Number: **685888**

JJ Calibrations, Inc.
7007 SE Lake Rd
Portland, OR 97267-2105
Phone 503.786.3005
FAX 503.786.2994

Omni-Test Laboratories
13327 NE Airport Way
Portland, OR 97230

0723.01
Calibration

PO: **180188**
Order Date: 10/09/2018
Authorized By: **N/A**

Property #: OMNI-00283A
User: N/A
Department: N/A
Make: Troemner Inc
Model: 1mg-100g (Class F)
Serial #: 47883
Description: Mass Set, 21pc
Procedure: DCN 500901
Accuracy: Class F

Calibrated on: 10/26/2018
*Recommended Due: 10/26/2023
Environment: 20 °C 57 % RH
* As Received: Within Tolerance
* As Returned: Within Tolerance
Action Taken: Calibrated
Technician: 139

Remarks: * Many factors may cause the unit to drift out of calibration before the recommended due date. Any reported error is the absolute value between the reference and the unit. Uncertainties include the effects of the unit.

This set meets Class F specifications.
Received and returned eight (8) masses in a black case secured by a rubber band.

Standards Used

Std ID	Manufacturer	Model	Nomenclature	Due Date	Trace ID
723A	Rice Lake	1mg-200g (Class 0)	Mass Set,	03/23/2019	668240
800A	Sartorius	MSA225W100DI	Analytical Balance	12/11/2018	663857

Measurement Data

Parameter / Measurement Description	Range Unit	Reference	Min	Max	[k]Error	UUT	Uncertainty Accredited = ✓
Before/After							
Mass							
Dot	200 mg	200.00030	199.4603	200.5403	0.0500	200.0503 mg	6.2E-01 ✓
	1 g	1.00000880	0.9991088	1.0009088	0.0000000	1.0000088 g	1E-03 ✓
	2 g	2.00001470	1.9989147	2.0011147	0.0003250	2.0003397 g	1.3E-03 ✓
	5 g	5.00000840	4.9985084	5.0015084	0.0000400	4.9999684 g	1.7E-03 ✓
	10 g	10.0000100	9.998010	10.002010	0.000245	9.999765 g	2.3E-03 ✓
Dot	20 g	20.0000140	19.996014	20.004014	0.000990	20.001004 g	4.6E-03 ✓
	50 g	49.9999660	49.989966	50.009966	0.000595	49.999371 g	1.1E-02 ✓
	100 g	100.000000	99.98000	100.02000	0.00194	99.99806 g	2.3E-02 ✓

JJ Calibrations, Inc. certifies that this instrument has been calibrated in accordance with the JJ Calibrations Quality Assurance Manual with the stated procedure using standards that are traceable to the National Institute of Standards and Technology (NIST), or other National Measurement Institutes (NMI's), or by using natural physical constants, intrinsic standards or ratio calibration techniques. The quality system and this certificate are in compliance with ANSI/NCSL Z540-1-1994, ISO/IEC 17025-2005, ISO 10012-1, the ISO 9000 family and QS 9000. The expanded uncertainties of measurements for this calibration are based upon 95% (2 sigma) confidence limits. Unless otherwise stated, a test accuracy ratio (TAR) of 4:1, if achievable, is maintained. The results reported herein apply only to the calibration of the item described above. This report may not be reproduced, except in full, without prior written consent of JJ Calibrations, Inc.
JJ Calibrations, Inc. quality system has been assessed and accredited to ISO/IEC 17025:2005.

Reviewer

3 Issued 10/29/2018 Rev # 15

Inspector

Thermal Metering System Calibration
Y Factor

Manufacturer:	Apex
Model:	XC-60-EP
Serial Number:	606001
OMNI Tracking No.:	OMNI-00335
Calibrated Orifice:	☐ Yes

Previous Calibration Comparision

Date	5/10/2022	Acceptable Deviation (5%)	Deviation
y Factor	1.003	0.05015	0.001
Acceptance	Acceptable		

Current Calibration

Acceptable y Deviation	0.020
Maximum y Deviation	0.006
Acceptable dH@ Deviation	N/A
Maximum dH@ Deviation	N/A
Acceptance	Acceptable

Average Gas Meter y Factor	Orifice Meter dH@
1.004	N/A

Calibration Date:	10/25/22	
Calibrated by:	Tony Tong	
Calibration Frequency:	Six Month	
Next Calibration Due:	4/25/2023	
Instrument Range:	1.000	cfm
Standard Temp.:	68	oF
Standard Press.:	29.92	"Hg
Barometric Press., Pb:	30.23	"Hg
Signature/Date:	Tony Tong / 10/25/2022	

Reference Standard *			
Standard Calibrator	Model	Standard Test Meter	
	S/N	OMNI-00001	
	Calib. Date	10-Dec-21	
	Calib. Value	0.9980	y factor (ref)

Calibration Parameters	Run 1	Run 2	Run 3
Reference Meter Pressure ("H2O), Pr	0.00	0.00	0.00
DGM Pressure ("H2O), Pd	2.00	1.26	1.00
Initial Reference Meter	441.224	430.613	435.76
Final Reference Meter	446.524	435.76	441.224
Initial DGM	0	0	0
Final DGM	5.455	5.33	5.682
Temp. Ref. Meter (°F), Tr	65.7	65.5	65.6
Temperature DGM (°F), Td	90.0	88.0	89.0
Time (min)	27.0	33.0	39.5
Net Volume Ref. Meter, Vr	5.300	5.147	5.464
Net Volume DGM, Vd	5.455	5.33	5.682
Gas Meter y Factor =	**1.010**	**1.002**	**1.000**
Gas Meter y Factor Deviation (from avg.)	0.006	0.002	0.004
Orifice dH@	**N/A**	**N/A**	**N/A**
Orifice dH@ Deviation (from avg.)	N/A	N/A	N/A

where:

1. Deviation = |Average value for all runs - current run value|
** 2. y = [Vr x (y factor (ref)) x (Pb + (Pr/ 13.6)) x (Td + 460)]/ [Vd x (Pb + (Pd / 13.6)) x (Tr + 460)]
** 3. dH@ = 0.0317 x Pd / (Pb (Td + 460)) x [(Tr + 460) x time) / Vr]^2

* Reference calibration is traceable to NIST through NIST Test # 40674, Kimble ASTM E1272, or NIST traceable laboratory

** Equations come from EPA Method 5

The uncertainty of measurement is ±0.14 ft^3/min. This is based on the reference standard having a TAR (Test Accuracy Ratio) of at least 4:1.

DIFFERENTIAL PRESSURE GAUGE CALIBRATION DATA SHEET

Instrument to be calibrated: Pressure Transducer (Draft)

Maximum Range: 0 – 1" H_2O ID Number: OMNI-00335

Calibration Instrument: Digital Manometer ID Number: OMNI-00633

Date: 10/24/2022 By: Tony Tong

This form is to be used only in conjunction with Standard Procedure C-SPC.

Range of Calibration Point ("WC)	Digital Manometer Input ("WC)	Pressure Gauge Response ("WC)	Difference | Input – Response |	% Error of Full Span*
0-20% Max. Range 0.0 – 0.2	0.109	0.104	0.005	0.5
20-40% Max. Range 0.2– 0.4	0.263	0.252	0.011	1.1
40-60% Max. Range 0.4 – 0.6	0.452	0.440	0.012	1.2
60-80% Max. Range 0.6 – 0.8	0.650	0.635	0.015	1.5
80-100% Max. Range 0.8 – 1.0	0.955	0.935	0.020	2.0

*Acceptable tolerance is 4%.

The uncertainty of measurement is ±0.4" WC. This is based on the reference standard having a TAR (Test Accuracy Ratio) of at least 4:1.

Technician signature: Tony Tong Date: 10/25/2022

Reviewed by: Date: 11/01/22

Temperature Calibration
EPA Method 28 R, ASTM 2515

Booth:	Temperature Monitor Type:	Equipment Number:
E 1	National Instruments Logger	00335, 00336

Reference Meter Number: 00373	Calibration Due Date: 10/20/2022

Calibration Performed By:	Date:	Ambient Temperature(F°):	Barometric Pressure(inHg):
Tony Tong	10/18/2022	72.7	30.16

Input Temp (°F)	Ambient	Meter A	Meter B	Filter A	Filter B	Tunnel	FB Interior
0	1	1	1	1	1	0	0
100	101	101	101	101	101	100	100
300	301	300	301	301	301	300	300
500	501	501	501	501	501	500	500
700	701	701	701	701	701	700	700
1000	1001	1001	1001	1001	1001	1000	1000
1500	1501	1501	1501	1501	1501	1501	1501
2000	2001	2001	2001	2001	2001	2001	2001

Input (°F)	FB Top	FB Bottom	FB Back	FB Left	FB Right	Imp A	Imp B	Cat	Stack
0	0	0	0	0	0	0	1	0	0
100	100	100	100	100	100	100	101	100	100
300	300	300	300	300	300	300	301	300	300
500	500	500	500	500	500	501	501	501	500
700	700	700	700	700	700	701	701	701	700
1000	1000	1000	1000	1000	1000	1001	1001	1001	1000
1500	1501	1501	1501	1501	1501	1501	1501	1501	1501
2000	2001	2001	2001	2001	2001	2001	2001	2001	2001

Technician Signature: Tony Tong Date: 10/25/2022

Reviewed By: Ken Morgan Date: 11/01/22

Thermal Metering System Calibration
Y Factor

Manufacturer:	Apex
Model:	XC-60-EP
Serial Number:	606002
OMNI Tracking No.:	OMNI-00336
Calibrated Orifice:	☐ Yes

Average Gas Meter y Factor	Orifice Meter dH@
1.002	N/A

Calibration Date:	10/25/22	
Calibrated by:	Tony Tong	
Calibration Frequency:	Six Month	
Next Calibration Due:	4/25/2023	
Instrument Range:	1.000	cfm
Standard Temp.:	68	oF
Standard Press.:	29.92	"Hg
Barometric Press., Pb:	30.23	"Hg
Signature/Date:	Tony Tong	/ 10/25/2022

Previous Calibration Comparision

Date	5/10/2022	Acceptable Deviation (5%)	Deviation
y Factor	1.003	0.05015	0.001
Acceptance	Acceptable		

Current Calibration

Acceptable y Deviation	0.020
Maximum y Deviation	0.002
Acceptable dH@ Deviation	N/A
Maximum dH@ Deviation	N/A
Acceptance	Acceptable

Reference Standard *			
Standard Calibrator	Model	Standard Test Meter	
	S/N	OMNI-00001	
	Calib. Date	10-Dec-21	
	Calib. Value	0.9980	y factor (ref)

Calibration Parameters	Run 1	Run 2	Run 3
Reference Meter Pressure ("H2O), Pr	0.00	0.00	0.00
DGM Pressure ("H2O), Pd	2.00	1.20	0.80
Initial Reference Meter	405.712	410.979	416.378
Final Reference Meter	410.979	416.378	421.415
Initial DGM	0	0	0
Final DGM	5.244	5.493	5.208
Temp. Ref. Meter (°F), Tr	64.4	64.9	65.1
Temperature DGM (°F), Td	67.0	78.0	85.0
Time (min)	25.0	34.0	40.0
Net Volume Ref. Meter, Vr	5.267	5.399	5.037
Net Volume DGM, Vd	5.244	5.493	5.208
Gas Meter y Factor =	**1.002**	**1.002**	**1.000**
Gas Meter y Factor Deviation (from avg.)	0.001	0.001	0.002
Orifice dH@	**N/A**	**N/A**	**N/A**
Orifice dH@ Deviation (from avg.)	N/A	N/A	N/A

where:

1. Deviation = |Average value for all runs - current run value|

** 2. y = [Vr x (y factor (ref)) x (Pb + (Pr/ 13.6)) x (Td + 460)]/ [Vd x (Pb + (Pd / 13.6)) x (Tr + 460)]

** 3. dH@ = 0.0317 x Pd / (Pb (Td + 460)) x [(Tr + 460) x time) / Vr]^2

* Reference calibration is traceable to NIST through NIST Test # 40674, Kimble ASTM E1272, or NIST traceable laboratory

** Equations come from EPA Method 5

The uncertainty of measurement is ±0.14 ft^3/min. This is based on the reference standard having a TAR (Test Accuracy Ratio) of at least 4:1.

DIFFERENTIAL PRESSURE GAUGE CALIBRATION DATA SHEET

Instrument to be calibrated: Pressure Transducer (ΔP)

Maximum Range: 0 – 1" H_2O ID Number: OMNI-00336

Calibration Instrument: Digital Manometer ID Number: OMNI-00633

Date: 10/24/2022 By: Tony Tong

This form is to be used only in conjunction with Standard Procedure C-SPC.

Range of Calibration Point ("WC)	Digital Manometer Input ("WC)	Pressure Gauge Response ("WC)	Difference | Input – Response |	% Error of Full Span*
0-20% Max. Range 0.0 – 0.2	0.087	0.085	0.002	0.2
20-40% Max. Range 0.2– 0.4	0.231	0.233	0.002	0.2
40-60% Max. Range 0.4 – 0.6	0.471	0.466	0.005	0.5
60-80% Max. Range 0.6 – 0.8	0.747	0.750	0.003	0.3
80-100% Max. Range 0.8 – 1.0	0.982	0.986	0.004	0.4

*Acceptable tolerance is 4%.

The uncertainty of measurement is ±0.4" WC. This is based on the reference standard having a TAR (Test Accuracy Ratio) of at least 4:1.

Technician signature: Tony Tong Date: 10/25/2022

Reviewed by: [signature] Date: 11/01/22

Certificate of Calibration

Certificate Number: 765754

JJ Calibrations, Inc.
7724 SE Aspen Summit Drive
Portland, OR 97266-9217
Phone 503.786.3005
FAX 503.786.2994

Omni-Test Laboratories
13327 NE Airport Way
Portland, OR 97230

PO: 220392
Order Date: 02/24/2022
Authorized By: N/A

Property #: OMNI-00410
User: N/A
Department: N/A
Make: Dwyer
Model: 1430
Serial #: OMNI-00410
Description: Microtector
Procedure: 500908
Accuracy: ±0.00025" WC

Calibrated on: 03/01/2022
*Recommended Due: 03/01/2023
Environment: 19 °C 34 % RH
* As Received: Limited
* As Returned: Limited
Action Taken: Calibrated
Technician: 53

Remarks: * Many factors may cause the unit to drift out of calibration before the recommended due date. Any reported error is the absolute value between the reference and the unit. Uncertainties include the effects of the unit.

Previous limitation for calibration of micrometer head only continued.

Standards Used

Std ID	Manufacturer	Model	Nomenclature	Due Date	Trace ID
541A	Select	E8FED2	Gage Block Set, 8pc	12/16/2022	761560

Measurement Data

Parameter / Measurement Description	Range	Unit	Reference	Min	Max	*Error	UUT	Uncertainty
Before/After								Accredited = ü
Length								
		Inch	0.1300	0.129	0.131	0.000	0.130 Inch	2.5E-05 ü
		Inch	0.3850	0.384	0.386	0.000	0.385 Inch	2.5E-05 ü
		Inch	0.6150	0.614	0.616	0.000	0.615 Inch	2.5E-05 ü
		Inch	0.8700	0.869	0.871	0.000	0.870 Inch	2.5E-05 ü
		Inch	1.0000	0.999	1.001	0.000	1.000 Inch	2.5E-05 ü

This instrument has been calibrated in accordance with the JJ Calibrations Quality Assurance Manual and is traceable to either the SI or to National Institute of Standards and Technology (NIST). The quality system and this certificate are in compliance with ANSI/NCSL Z540-1-1994, ISO/IEC 17025-2017, ISO 10012-1, the ISO 9000 family and QS 9000. The expanded uncertainties of measurements for this calibration are based upon 95% (2 sigma) confidence limits. Unless stated in the comments, certificates reflect the "Simple Acceptance Rule" as specified by JCGM 106:2012. Unless otherwise stated, a test accuracy ratio (TAR) of 4:1, if achievable, is maintained. The results reported herein apply only to the calibration of the item described above. This report may not be reproduced, except in full, without written approval of JJ Calibrations.

Reviewer

3 Issued 03/02/2022 Rev # 15

Inspector

Tektronix®

ACCREDITED

CALIBRATION CERT #2357.22

Certificate of Calibration

16992685

Instrument Identification

Company ID: 74857
OMNI-TEST
MICHAEL CASTILLO
13327 NE ARIPORT WAY
PORTLAND, OR 97230

PO Number: 210388

Instrument ID: **OMNI-00677**
Manufacturer: DWYER INSTRUMENTS
Description: ANEMOMETER VANE

Model Number: VT-200
Serial Number: 18200149
SW/FW Version: INDETERMINATE

Certificate Information

Reason For Service: CALIBRATION
Type of Cal: ACCREDITED 17025 WITH UNCERTAINTIES
As Found Condition: IN TOLERANCE
As Left Condition: IN TOLERANCE
Procedure: 33K6-4-1769-1 VELOCITY, TEMP, AND FLOW REV: 9/30/15
Remarks: *SW/FW version is unobtainable due to age or design of instrument.*

Technician: HAROLD DICKS
Cal Date 06Jan2022
Cal Due Date: 06Jan2023
Interval: 12 MONTHS
Temperature: 22.8 C
Humidity: 39.3 %

Tektronix certifies the performance of the above instrument has been verified using test equipment of known accuracy, traceable to the International System of Units (SI) through a National Metrology Institute such as NIST, NPL or PTB. The methods and procedures used comply with ISO/IEC 17025. The reported expanded measurement uncertainty is stated as the standard measurement uncertainty multiplied by the coverage factor k=2 such that the coverage probability corresponds to approximately 95%.
Dimensional testing length measurements are performed in accordance with A2LA R205 – Specific Requirements: Calibration Laboratory Accreditation Program and are deemed equivalent to that of a calibration.

This certificate and associated attachments relate only to the items calibrated. No representation is made about the long-term stability of this unit. Any number of factors can influence the calibration that may cause the unit to drift out of specification before the calibration interval has expired. Calibration due dates appearing on the certificate or label are determined by the customer for administrative purposes and do not imply continued conformance to specifications.

This certificate shall not be reproduced, except in full, without the written approval of the issuing calibration laboratory.

Data Report Attached.

Approved By: HAROLD DICKS
Service Representative

Issue Date: 1/6/2022

Calibration Standards

NIST Traceable#	Inst. ID#	Description	Manufacturer	Model	Cal Date	Date Due
16752746	17021560	TEMP/HUM RECORDER	OMEGA	iTHX-SD	14Sep2021	14Sep2022
14942663REV1	38-1005980	PITOT TUBE AIRFLOW SYSTEM	SYPRIS	AF12319/PX653	16Aug2019	16Aug2024
16339637	38-1007264	PLATINUM RESISTANCE THERMOMETER	HART SCIENTIFIC	1502A/5612	19Mar2021	19Mar2022

Tektronix®

ACCREDITED

CALIBRATION CERT #2357.22

Certificate of Calibration

16992685

Calibration Standards

NIST Traceable#	Inst. ID#	Description	Manufacturer	Model	Cal Date	Date Due
16861091	38-1018828	TEMP/HUMIDITY PROBE	VAISALA	HMP45A	28Oct2021	28May2023
16868882	B0023974	DATA ACQUISITION/SWITCH UNIT	AGILENT	34970A	02Nov2021	02Jun2023
16579756REV1	C100008	HIGH ACCURACY PRESSURE TRANSDUCER	MKS INSTRUMENTS	120AD-00001RCU	24Jun2021	24Apr2022
16865796	C100831	PRESSURE TRANSDUCER	OMEGA	PX409-16B5V	31Oct2021	31May2023
16930414	H058567	DIGITAL PRESSURE GAGE	MENSOR	2101	24Nov2021	24Jun2023

9639 Interocean Drive • Cincinnati, OH 45246 • Phone: 513-870-4730 • Fax: 513-874-7752

Tektronix®

Certificate Number: 16992685

Manufacturer: DWYER INSTRUMENTS
ID / Asset Number: OMNI-00677

Model Number: VT-200
Calibration Date: 06-Jan-2022

Function / Range	Nominal Value	As Found	Result	As Left	Result	Min	Max	Units	Uncertainty
Velocity									
Velocity	313	336	Pass	Same	Pass	284	342	FPM	4.8 FPM
	781	813	Pass	Same	Pass	738	824	FPM	21 FPM
	2999	3018	Pass	Same	Pass	2889	3109	FPM	62 FPM
	5985	6083	Pass	Same	Pass	5785	6185	FPM	140 FPM
	7581	7770	Pass	Same	Pass	7334	7828	FPM	180 FPM
Temperature									
Temperature	51.15	50.75	Pass	Same	Pass	49.35	52.95	F	0.12 F
	77.01	77.52	Pass	Same	Pass	75.21	78.81	F	0.12 F
	111.09	111.21	Pass	Same	Pass	109.29	112.89	F	0.13 F

Decision Rule 1 - Accredited Calibration Datasheets may contain measurements that are not covered by the Scope of Accreditation. These measurements are indicated by a pound sign(#). Measurement Uncertainty IS NOT taken into account for determining PASS or FAIL.

********END OF MEASUREMENT REPORT********

VWR Temperature Hygrometer Calibration Procedure and Data Sheet

Frequency: Every Two Years

Step 1: Locate NIST traceable standard.

Step 2: Place unit to be calibrated, tracking No. OMNI-709 , inside OMNI desiccate box on the same shelf with the NIST traceable standard.

Step 3: After a period of not less than four hours record the temperature and humidity of both units in the spaces provide below.

Step 4: If the unit to be calibrated matches the NIST standard within ± 4%, it is acceptable. If not, the unit needs to be sent to a repair company or replaced.

Verification Data:

Date: 01/27/2021 Technician: Tony Tong

Time in desiccate: 12:00 Recording time: 17:00

NIST Standard Temperature: 66.8 °F NIST Standard Humidity: 14.0

Test Unit Temperature Reading: 66.5 °F Test Unit Humidity Reading: 12.3

Test unit OMNI- 00709 is X or was not _____ within acceptable limits.

Technician Signature: Tony Tong

Comments: Humidity difference between NIST standard and test meter is 1.7%. With a full scale of 95% of the meter, it has a 1.79% error of full span.

Established 1974

QUALITY CONTROL SERVICES

LABORATORY EQUIPMENT • SALES • SERVICE • CALIBRATION • REPAIRS
2340 SE 11TH Ave. Portland, Oregon 97214 • Box 14831 Portland, Oregon 97293
(503) 236-2712 • FAX (503) 235-2535 • www.qc-services.com

ACCREDITED
CERTIFICATE #1550.01

OMNI-Test Laboratories, Inc.
13327 NE Airport Way
Portland, OR 97230

Report Number: OMNE03B729400181220727

A2LA ACCREDITED
CERTIFICATE OF CALIBRATION WITH DATA

INSTRUMENT INFORMATION

Item	Make	Model	Serial Number	Customer ID	Location
Balance	Mettler	MS104TS	B729400181	N/A	Lab
Units	**Readability**	**SOP**	**Cal Date**	**Last Cal Date**	**Cal Due Date**
g	0.0001	qcs012	7/27/22	1/11/22	1/2023

FUNCTIONAL CHECKS

ECCENTRICITY
Test Wt: 50 Tol: 0.0001
As-Found: Pass: ☑ Fail: ☐
As-Left: Pass: ☑ Fail: ☐

LINEARITY
Test Wt: 20x4 Tol: 0.0001
As-Found: Pass: ☑ Fail: ☐
As-Left: Pass: ☑ Fail: ☐

STANDARD DEVIATION
Test Wt: 100 Tol: 0.0001

1. 100.0000	5. 99.9999	9. 99.9999
2. 100.0000	6. 99.9999	10. 99.9999
3. 99.9999	7. 100.0000	Result
4. 99.9999	8. 100.0000	0.00005

ENVIRONMENTAL CONDITIONS
☐ Good ☑ Fair ☐ Poor
Temperature: 27.1°C

A2LA ACCREDITED SECTION OF REPORT

Standard	As-Found	As-Left	Expanded Uncertainty
100	99.9998	100.0000	0.00016
80	80.0000	80.0000	0.00016
50	50.0001	50.0001	0.00015
20	20.0000	20.0001	0.00015
1	1.0000	1.0000	0.00015
0.1	0.1000	0.1000	0.00015

CALIBRATION STANDARDS

Item	Make	Model	Serial Number	Cal Date	Cal Due Date	NIST ID
Weight Set	Rice Lake	20 kg to 1mg	2831W	3/1/22	3/2023	20220382

Permanent Information Concerning this Equipment:
6 Month calibration cycle.

Comments/Info Concerning this Calibration:
7/22 RH= 47%. Leveled unit & adjusted span.

Report prepared/reviewed by: JC **Date:** 7/27/22 **Technician:** J. Colacchio
Signature:

THIS CERTIFICATE SHALL NOT BE REPRODUCED WITHOUT THE APPROVAL OF QUALITY CONTROL SERVICES, INC.

The uncertainty is calculated according to the ISO Guide to the Expression of Uncertainty in Measurement and includes the uncertainty of standards used combined with the observed standard deviation and readability of the unit under test. The uncertainty is expanded with a k factor of 2 for an approximate 95% level of confidence. Instruments listed above were calibrated using standards traceable to the National Institute of Standards and Technology (NIST). Calibration data reflect results at the time and location of calibration. Calibration data should be reviewed to insure that the instrument is performing to its required accuracy. Calibrations comply with ISO/IEC 17025 and ANSI/Z540-1-1994 quality standards. Results relate only to the item(s) tested. Unless otherwise noted, statements of conformity do not include measurement

Member: National Conference of Standards Laboratories and Weights & Measures

PT ID: OMNE03

Thermal Metering System Calibration
Y Factor

Manufacturer:	Apex Instruments
Model:	MC563 Source Sampler
Serial Number:	601001
OMNI Tracking No.:	OMNI-00322
Calibrated Orifice:	☐ Yes

Average Gas Meter y Factor	Orifice Meter dH@
1.016	**N/A**

Calibration Date:	07/19/22	
Calibrated by:	Tony Tong	
Calibration Frequency:	Six Month	
Next Calibration Due:	1/19/2023	
Instrument Range:	1.000	cfm
Standard Temp.:	68	oF
Standard Press.:	29.92	"Hg
Barometric Press., Pb:	30.06	"Hg
Signature/Date:	Tony Tong	07/19/2022

Previous Calibration Comparision

Date	2/10/2022	Acceptable Deviation (5%)	Deviation
y Factor	1.011	0.05055	0.005
Acceptance	Acceptable		

Current Calibration

Acceptable y Deviation	0.020
Maximum y Deviation	0.009
Acceptable dH@ Deviation	N/A
Maximum dH@ Deviation	N/A
Acceptance	Acceptable

Reference Standard *			
Standard Calibrator	Model	Standard Test Meter	
	S/N	OMNI-00001	
	Calib. Date	10-Dec-21	
	Calib. Value	0.9980	y factor (ref)

Calibration Parameters	Run 1	Run 2	Run 3
Reference Meter Pressure ("H2O), Pr	0.00	0.00	0.00
DGM Pressure ("H2O), Pd	2.00	1.00	0.25
Initial Reference Meter	58.967	53.314	47.93
Final Reference Meter	64.883	58.967	53.314
Initial DGM	0	0	0
Final DGM	5.746	5.528	5.324
Temp. Ref. Meter (°F), Tr	77.9	77.9	77.7
Temperature DGM (°F), Td	78.0	78.0	77.0
Time (min)	7.5	10.5	30.0
Net Volume Ref. Meter, Vr	5.916	5.653	5.384
Net Volume DGM, Vd	5.746	5.528	5.324
Gas Meter y Factor =	**1.023**	**1.018**	**1.007**
Gas Meter y Factor Deviation (from avg.)	0.007	0.002	0.009
Orifice dH@	**N/A**	**N/A**	**N/A**
Orifice dH@ Deviation (from avg.)	N/A	N/A	N/A

where:

1. Deviation = |Average value for all runs - current run value|

** 2. y = [Vr x (y factor (ref)) x (Pb + (Pr/ 13.6)) x (Td + 460)]/ [Vd x (Pb + (Pd / 13.6)) x (Tr + 460)]

** 3. dH@ = 0.0317 x Pd / (Pb (Td + 460)) x [(Tr + 460) x time) / Vr]^2

* Reference calibration is traceable to NIST through NIST Test # 40674, Kimble ASTM E1272, or NIST traceable laboratory

** Equations come from EPA Method 5

The uncertainty of measurement is ±0.14 ft^3/min. This is based on the reference standard having a TAR (Test Accuracy Ratio) of at least 4:1.

Calibration Sheet For MTW-150K S/N MKW04072 (OMNI-00353)

Date : 11/30/2022 Verified by: Tony Tong

Reference Weights Used	Weight (lb)	Scale Readout 1	2	3	4	5	Compliance
00283B	2.2	2.2	2.2	2.2	2.2	2.2	✓
00283B	4.4	4.4	4.4	4.4	4.4	4.4	✓
00255	10	10.0	10.0	10.0	10.0	10.0	✓
00255, 00274	20	20.0	20.0	20.0	20.0	20.0	✓
00255, 00274, 00132	30	30.0	30.0	30.0	30.0	30.0	✓

Certificate of Calibration

Certificate Number: 782458

JJ Calibrations, Inc.
7724 SE Aspen Summit Drive
Portland, OR 97266-9217
Phone 503.786.3005
FAX 503.786.2994

Omni-Test Laboratories
13327 NE Airport Way
Portland, OR 97230

PO: 220413
Order Date: 11/04/2022
Authorized By: N/A

Property #: OMNI 00431
User: N/A
Department: N/A
Make: Delmhorst
Model: MCS-1
Serial #: OMNI 00431
Description: Moisture Calibrator
Procedure: Raw Data
Accuracy: Raw Data

Calibrated on: 11/12/2022
*Recommended Due: 11/12/2023
Environment: 23 °C 40 % RH
* As Received: Other - See Remarks
* As Returned: Other - See Remarks
Action Taken: Calibrated
Technician: 40

Remarks: * Many factors may cause the unit to drift out of calibration before the recommended due date. Any reported error is the absolute value between the reference and the unit. Uncertainties include the effects of the unit.

Data is provided for your determination of acceptability.

Standards Used

Std ID	Manufacturer	Model	Nomenclature	Due Date	Trace ID
582A	Fluke	8508A	8 1/2 Reference Mtr	06/28/2023	772664

Measurement Data

Parameter / Measurement Description	Range	Unit	Reference	Min	Max	*Error	UUT	Uncertainty	Accredited = ü
Before/After									
Resistance									
12 %		MOhm	120.0000	0.000	0.000	1.346	121.346 MOhm	5.7E-01	ü
22 %		MOhm	1.100000	0.00000	0.00000	0.00098	1.10098 MOhm	5.7E-01	ü

This instrument has been calibrated in accordance with the JJ Calibrations Quality Assurance Manual and is traceable to either the SI or to National Institute of Standards and Technology (NIST). The quality system and this certificate are in compliance with ANSI/NCSL Z540-1-1994, ISO/IEC 17025-2017, ISO 10012-1, the ISO 9000 family and QS 9000. The expanded uncertainties of measurements for this calibration are based upon 95% (2 sigma) confidence limits. Unless stated in the comments, certificates reflect the "Simple Acceptance Rule" as specified by JCGM 106:2012. Unless otherwise stated, a test accuracy ratio (TAR) of 4:1, if achievable, is maintained. The results reported herein apply only to the calibration of the item described above. This report may not be reproduced, except in full, without written approval of JJ Calibrations.

Reviewer

3 Issued 11/15/2022 Rev # 15

Inspector

PRAXAIR
Making our planet more productive

FEB 24 2020

DocNumber: 299345

Praxair Distribution, Inc.
5700 S. Alameda Street
Los Angeles CA 90058
Tel: 323-585-2154
Fax: 714-542-6689
PGVP ID: F22020

CERTIFICATE OF ANALYSIS / EPA PROTOCOL GAS

Customer & Order Information

PXPKG TUALATIN OR H
10450 SW TUALATIN SHERWOOD ROAD
TUALATIN OR 97062-9547

Certificate Issuance Date: 02/07/2020
Praxair Order Number: 71237269
Part Number: NI CD17CO8E-AS
Customer PO Number: 79225905

Fill Date: 02/03/2020
Lot Number: 70086003404
Cylinder Style & Outlet: AS CGA 590
Cylinder Pressure and Volume: 1300 psig 99 ft3

Certified Concentration

ProSpec EZ Cert

Expiration Date: 02/07/2028		NIST Traceable
Cylinder Number: DT0034101		Expanded Uncertainty
16.94 %	**Carbon dioxide**	**± 0.5 %**
4.32 %	**Carbon monoxide**	**± 0.6 %**
16.97 %	**Oxygen**	**± 0.2 %**
Balance	**Nitrogen**	

Certification Information:

Certification Date: 02/07/2020 *Term:* 96 Months *Expiration Date:* 02/07/2028

This cylinder was certified according to the 2012 EPA Traceability Protocol, Document #EPA-600/R-12/531, using Procedure G1.

Do Not Use this Standard if Pressure is less than 100 PSIG.

CO2 responses have been corrected for Oxygen IR Broadening effect. O2 responses have been corrected for CO2 interference.

Analytical Data:

(R=Reference Standard, Z=Zero Gas, C=Gas Candidate)

1. ***Component:*** **Carbon dioxide**

Requested Concentration: 17 %
Certified Concentration: 16.94 %
Instrument Used: Horiba VIA-510 S/N 20C194WK
Analytical Method: NDIR
Last Multipoint Calibration: 01/24/2020

First Analysis Data:						Date	02/07/2020
Z:	0	R:	19.98	C:	16.94	Conc:	16.94
R:	19.98	Z:	0	C:	16.95	Conc:	16.95
Z:	0	C:	16.95	R:	19.99	Conc:	16.95
UOM:	%			Mean Test Assay:			16.94 %

Reference Standard: Type / Cylinder #: GMIS / CC149981
Concentration / Uncertainty: 19.98 % ±0.279%
Expiration Date: 06/07/2026
Traceable to: SRM # / Sample # / Cylinder #: RGM#CC28033 / N/A / RGM#CC28033
SRM Concentration / Uncertainty: 19.67% / ±0.04%
SRM Expiration Date: 07/15/2021

Second Analysis Data:						Date	
Z:	0	R:	0	C:	0	Conc:	0
R:	0	Z:	0	C:	0	Conc:	0
Z:	0	C:	0	R:	0	Conc:	0
UOM:	%			Mean Test Assay:			%

2. ***Component:*** **Carbon monoxide**

Requested Concentration: 4.25 %
Certified Concentration: 4.32 %
Instrument Used: Horiba VIA-510 S/N UB9UCSYX
Analytical Method: NDIR
Last Multipoint Calibration: 01/31/2020

First Analysis Data:						Date	02/07/2020
Z:	0	R:	5	C:	4.32	Conc:	4.32
R:	5	Z:	0	C:	4.32	Conc:	4.32
Z:	0	C:	4.32	R:	5.01	Conc:	4.32
UOM:	%			Mean Test Assay:			4.32 %

Reference Standard: Type / Cylinder #: GMIS / CC242633
Concentration / Uncertainty: 5.00 % ±0.543%
Expiration Date: 04/03/2025
Traceable to: SRM # / Sample # / Cylinder #: SRM 2642a / 51-D-23 / FF23106
SRM Concentration / Uncertainty: 7.859% / ±0.039%
SRM Expiration Date: 07/15/2019

Second Analysis Data:						Date	
Z:	0	R:	0	C:	0	Conc:	0
R:	0	Z:	0	C:	0	Conc:	0
Z:	0	C:	0	R:	0	Conc:	0
UOM:	%			Mean Test Assay:			%

3. ***Component:*** **Oxygen**

Requested Concentration: 17 %
Certified Concentration: 16.97 %
Instrument Used: OXYMAT 5E
Analytical Method: Paramagnetic
Last Multipoint Calibration: 01/24/2020

First Analysis Data:						Date	02/07/2020
Z:	0	R:	20.88	C:	16.98	Conc:	16.97
R:	20.88	Z:	0	C:	16.98	Conc:	16.97
Z:	0	C:	17	R:	20.9	Conc:	16.99
UOM:	%			Mean Test Assay:			16.97 %

Reference Standard: Type / Cylinder #: GMIS / CC707388
Concentration / Uncertainty: 20.87 % ±0.108%
Expiration Date: 12/14/2026
Traceable to: SRM # / Sample # / Cylinder #: SRM 2659a / 71-E-19 / FF22331
SRM Concentration / Uncertainty: 20.863% / ±0.021%
SRM Expiration Date: 08/23/2021

Second Analysis Data:						Date	
Z:	0	R:	0	C:	0	Conc:	0
R:	0	Z:	0	C:	0	Conc:	0
Z:	0	C:	0	R:	0	Conc:	0
UOM:	%			Mean Test Assay:			%

Analyzed By: Jose Vasquez

Certified By: Jenna Lockhart

Information contained herein has been prepared at your request by qualified experts within Praxair Distribution, Inc. While we believe that the information is accurate within the limits of the analytical methods employed and is complete to the extent of the specific analyses performed, we make no warranty or representation as to the suitability of the use of the information for any purpose. The information is offered with the understanding that any use of the information is at the sole discretion and risk of the user. In no event shall the liability of Praxair Distribution, Inc., arising out of the use of the information contained herein exceed the fee established for providing such information.

PRAXAIR
Making our planet more productive

DocNumber: 223792

Praxair Distribution, Inc.
5700 S. Alameda Street
Los Angeles CA 90058
Tel: 323-585-2154
Fax: 714-542-6689
PGVP ID: F22018

CERTIFICATE OF ANALYSIS / EPA PROTOCOL GAS

Customer & Order Information

PXPKG TUALATIN OR H
10450 SW TUALATIN SHERWOOD ROAD
TUALATIN OR 97062

Certificate Modification Date: 09/05/2018
Praxair Order Number: 70716136
Part Number: NI CD10CO33E-AS

Fill Date: 08/31/2018
Lot Number: 70086824309
Cylinder Style & Outlet: AS CGA 590
Cylinder Pressure and Volume: 2000 psig 140 ft3

Certified Concentration

ProSpec EZ Cert

Expiration Date: 09/05/2026		NIST Traceable
Cylinder Number: CC243832		Expanded Uncertainty
10.08 %	**Carbon dioxide**	**± 0.3 %**
2.53 %	**Carbon monoxide**	**± 0.7 %**
10.52 %	**Oxygen**	**± 0.6 %**
Balance	**Nitrogen**	

Certification Information:

Certification Date: 09/05/2018 *Term:* 96 Months *Expiration Date:* 09/05/2026

This cylinder was certified according to the 2012 EPA Traceability Protocol, Document #EPA-600/R-12/531, using Procedure G1.

Do Not Use this Standard if Pressure is less than 100 PSIG.

CO responses have been corrected for CO2 interference. CO2 responses have been corrected for Oxygen IR Broadening effect. O2 responses have been corrected for CO2 interference.

Analytical Data:

(R=Reference Standard, Z=Zero Gas, C=Gas Candidate)

1. ***Component:*** **Carbon dioxide**

Requested Concentration: 10 %
Certified Concentration: 10.08 %
Instrument Used: Horiba VIA-510 S/N 20C194WK
Analytical Method: NDIR
Last Multipoint Calibration: 08/20/2018

Reference Standard: Type / Cylinder #: GMIS / CC141375
Concentration / Uncertainty: 14.02 % ±0.3%
Expiration Date: 06/11/2026
Traceable to: SRM # / Sample # / Cylinder #: SRM 1675b / 6-F-51 / CAL014538
SRM Concentration / Uncertainty: 13.963% / ±0.034%
SRM Expiration Date: 05/16/2022

First Analysis Data:						Date 09/05/2018
Z: 0	R: 14.02	C: 10.08	Conc: 10.08			
R: 14.02	Z: 0	C: 10.08	Conc: 10.08			
Z: 0	C: 10.08	R: 14.02	Conc: 10.08			
UOM: %			Mean Test Assay: 10.08 %			

Second Analysis Data:						Date
Z: 0	R: 0	C: 0	Conc: 0			
R: 0	Z: 0	C: 0	Conc: 0			
Z: 0	C: 0	R: 0	Conc: 0			
UOM: %			Mean Test Assay: %			

2. ***Component:*** **Carbon monoxide**

Requested Concentration: 2.5 %
Certified Concentration: 2.53 %
Instrument Used: Horiba VIA-510 S/N UB9UCSYX
Analytical Method: NDIR
Last Multipoint Calibration: 08/20/2018

Reference Standard: Type / Cylinder #: GMIS / CC102045
Concentration / Uncertainty: 2.48 % ±0.448%
Expiration Date: 04/03/2025
Traceable to: SRM # / Sample # / Cylinder #: SRM 2641a / 52-D-30 / CAL017193
SRM Concentration / Uncertainty: 4.009% / ±0.017%
SRM Expiration Date: 07/15/2019

First Analysis Data:						Date 09/05/2018
Z: 0	R: 2.48	C: 2.53	Conc: 2.53			
R: 2.48	Z: 0	C: 2.52	Conc: 2.52			
Z: 0	C: 2.53	R: 2.48	Conc: 2.53			
UOM: %			Mean Test Assay: 2.53 %			

Second Analysis Data:						Date
Z: 0	R: 0	C: 0	Conc: 0			
R: 0	Z: 0	C: 0	Conc: 0			
Z: 0	C: 0	R: 0	Conc: 0			
UOM: %			Mean Test Assay: %			

3. ***Component:*** **Oxygen**

Requested Concentration: 10.5 %
Certified Concentration: 10.52 %
Instrument Used: OXYMAT 5E
Analytical Method: Paramagnetic
Last Multipoint Calibration: 09/04/2018

Reference Standard: Type / Cylinder #: NTRM / DT0010402
Concentration / Uncertainty: 9.88 % ±0.4%
Expiration Date: 11/18/2022
Traceable to: SRM # / Sample # / Cylinder #: NTRM #170701 / N/A / NTRM #DT0010402
SRM Concentration / Uncertainty: 9.875% / ±0.040%
SRM Expiration Date: 11/18/2022

First Analysis Data:						Date 09/05/2018
Z: 0	R: 9.88	C: 10.52	Conc: 10.52			
R: 9.88	Z: 0	C: 10.52	Conc: 10.52			
Z: 0	C: 10.51	R: 9.88	Conc: 10.51			
UOM: %			Mean Test Assay: 10.52 %			

Second Analysis Data:						Date
Z: 0	R: 0	C: 0	Conc: 0			
R: 0	Z: 0	C: 0	Conc: 0			
Z: 0	C: 0	R: 0	Conc: 0			
UOM: %			Mean Test Assay: %			

Analyzed By Danielle Burns

Certified By Jose Vasquez

Information contained herein has been prepared at your request by qualified experts within Praxair Distribution, Inc. While we believe that the information is accurate within the limits of the analytical methods employed and is complete to the extent of the specific analyses performed, we make no warranty or representation as to the suitability of the use of the information for any purpose. The information is offered with the understanding that any use of the information is at the sole discretion and risk of the user. In no event shall the liability of Praxair Distribution, Inc., arising out of the use of the information contained herein exceed the fee established for providing such information.

Example Calculations

Equations and Sample Calculations – ASTM E2780 & E2515

Manufacturer:	Kuma
Model:	K-181
Run:	1
Category:	

Equations used to calculate the parameters listed below are described in this appendix. Sample calculations are provided for each equation. The raw data and printout results from a sample run are also provided for comparison to the sample calculations.

M_{Sdb} – Weight of test fuel spacers, dry basis, kg

M_{Cdb}– Weight of test fuel crib, excluding nails and spacers, dry basis, kg

D_{Cdb} - Density of fuel crib, excluding spacers and nails, dry basis, lbs/ft^3

M_{FTAdb} - Total weight of fuel crib excluding nails, dry basis, kg

BR – Dry burn rate, kg/hr

V_s – Average gas velocity in the dilution tunnel, ft/sec

Q_{sd} – Average gas flow rate in dilution tunnel, dscf/hr

$V_{m(std)}$ – Volume of gas sampled, corrected to dry standard conditions, dscf

m_n – Total particulate matter collected, mg

C_s - Concentration of particulate matter in tunnel gas, dry basis, corrected to standard conditions, g/dscf

E_T – Total particulate emissions, g

PR - Proportional rate variation

PM_R – Particulate emissions for test run, g/hr

PM_F – Particulate emission factor for test run, g/dry kg of fuel burned

M_{Sdb} – Weight of test fuel spacers, dry basis, kg
ASTM E2780 equation (1)

$$M_{Sdb} = (M_{Swb})(100/(100 + FM_S))$$

Where,

FM_S = average fuel moisture of test fuel spacers, % dry basis

M_{Swb} = weight of test fuel spacers, wet basis, kg

Sample Calculation:

FM_S = 20.3 %

M_{Swb} = 1.7 lbs

0.4536 = Conversion factor from lbs to kg

M_{Sdb} = [(1.7 x 0.4536) (100/(100 + 20.3)

M_{Sdb} = **0.64** kg

M_{Cdb}– Weight of test fuel crib, excluding nails and spacers, dry basis, kg
ASTM E2780 equation (2)

$$M_{Cdb} = \Sigma[(M_{CPnwb})(100/(100 + FM_{CPn}))]$$

Where,

M_{CPnwb} = weight of each test fuel piece n in fuel crib, excluding nails and spacers, wet basis, kg

FM_{CPn} = Average fuel moisture of test fuel n in fuel crib, % dry basis

Sample Calculation (test fuel piece 1):

MC_{Pnwb} = 1.8

FM_{CPn} = 21.2

= 1.8 (100/(100+ 21.2)

= 1.5 lbs

Total crib weight, excluding spacer 9.06 lbs

M_{Cdb} = **4.11** kg

D_{Cdb} - Density of fuel crib, excluding spacers and nails, dry basis, lbs/ft^3
ASTM E2780 equation (3)

$$D_{Cdb} = M_{Cdb}/V_C$$

Where,

V_C = Volume of fuel crib, ft^3

Sample calculation:

V_C = 533.75 in^3
1728 = conversion from in^3 to ft^3

D_{Cdb} = 9.06 / 533.75 * 1728

= **29.3463** lbs/ft^3

M_{FTAdb} - Total weight of fuel crib excluding nails, dry basis, kg
ASTM E2780 equation (4)

$$M_{FTAdb} = M_{Sdb} + M_{Cdb}$$

Sample calculation:

$$M_{FTAdb} = 0.641 + 4.11$$

$$= \mathbf{4.75} \text{ kg}$$

BR – dry burn rate, kg/hr
ASTM E2780 equation (5)

$$BR = \frac{60\ M_{FTAdb}}{\theta}$$

Where,

θ = Total length of test run, min

Sample Calculation:

M_{Bdb} = 4.75 kg

θ = 131 min

$$BR = \frac{60 \times 4.75}{131}$$

BR = **2.18** kg/hr

V_s – Average gas velocity in the dilution tunnel, ft/sec
ASTM E2515 equations (9)

$$v_s = F_P \times k_p \times C_p \times (\sqrt{\Delta P})_{avg} \times \sqrt{\frac{T_{s(avg)}}{P_s \times M_s}}$$

Where:

F_p	=	Adjustment factor for center of tunnel pitot tube placement, Fp = $\frac{V_{strav}}{V_{scent}}$, ASTM E2515 Equation (1)
v_{scent}	=	Dilution tunnel velocity calculated after the multi-point pitot traverse at the center, ft/sec
v_{strav}	=	Dilution tunnel velocity calculated after the multi-point pitot traverse, ft/sec
k_p	=	Pitot tube constant, 85.49
C_p	=	Pitot tube coefficient: 0.99, unitless
ΔP*	=	Velocity pressure in the dilution tunnel, in H_2O
T_s	=	Absolute average gas temperature in the dilution tunnel, °R; (°R = °F + 460)
P_s	=	Absolute average gas static pressure in dilution tunnel, = P_{bar} + P_g , in Hg
P_{bar}	=	Barometric pressure at test site, in. Hg
P_g	=	Static pressure of tunnel, in. H_20; (in Hg = in H_20/13.6)
M_s	=	**The dilution tunnel wet molecular weight; M_s = 28.78 assuming a dry weight of 29 lb/lb-mole

Sample calculation:

$$Fp = \frac{18.85}{21.77} = 0.866$$

$$V_s = 0.866 \times 85.49 \times 0.99 \times 0.318 \times \left(\frac{104.2 + 460}{\left(30.08 + \frac{-0.31}{13.6} \right) \times 28.78} \right)^{1/2}$$

V_s = **18.83** ft/s

*The ASTM test standard mistakenly has the square root of the average delta p instead of the average of the square root of delta p. The current EPA Method 2 is also incorrect. This was verified by Mike Toney at EPA.

**The ASTM test standard mistakenly identifies Ms as the dry molecular weight. It should be the wet molecular weight as indicated in EPA Method 2.

Q_{sd} – Average gas flow rate in dilution tunnel, dscf/hr
ASTM E2515 equation (3)

$$Q_{sd} = 3600 \times (1 - B_{ws}) \times v_s \times A \times \frac{T_{std}}{T_{s(avg)}} \times \frac{P_s}{P_{std}}$$

Where:

3600	=	Conversion from seconds to hours (ASTM method uses 60 to convert in minutes)
B_{ws}	=	Water vapor in gas stream, proportion by volume; assume 2%
A	=	Cross sectional area of dilution tunnel, ft^2
T_{std}	=	Standard absolute temperature, 528 °R
P_s	=	Absolute average gas static pressure in dilution tunnel, = P_{bar} + P_g , in Hg
$T_{s(avg)}$	=	Absolute average gas temperature in the dilution tunnel, °R; (°R = °F + 460)
P_{std}	=	Standard absolute pressure, 29.92 in Hg

Sample calculation:

$$Q_{sd} = 3600 \times (1 - 0.02) \times 18.83 \times 0.196 \times \frac{528}{104.2 + 460} \times \frac{30.1 + \frac{-0.31}{13.6}}{29.92}$$

Q_{sd} = **12255.4** dscf/hr

$V_{m(std)}$ – Volume of Gas Sampled Corrected to Dry Standard Conditions, dscf
ASTM E2515 equation (6)

$$V_{m(std)} = K_1 \, V_m \, Y \frac{P_{bar} + \left(\frac{\Delta H}{13.6}\right)}{T_m}$$

Where:

K_1	=	17.64 °R/in. Hg
V_m	=	Volume of gas sample measured at the dry gas meter, dcf
Y	=	Dry gas meter calibration factor, dimensionless
P_{bar}	=	Barometric pressure at the testing site, in. Hg
ΔH	=	Average pressure differential across the orifice meter, in. H_2O
T_m	=	Absolute average dry gas meter temperature, °R

Sample Calculation:

Using equation for Train 1:

$$V_{m(std)} = 17.64 \times 21.038 \times 1.004 \times \frac{\left(30.08 + \frac{1.27}{13.6}\right)}{(78.0 + 460)}$$

$V_{m(std)}$ = **20.897** dscf

Using equation for Train 2:

$$V_{m(std)} = 17.64 \times 21.061 \times 1.002 \times \frac{\left(30.08 + \frac{1.12}{13.6}\right)}{(78.0 + 460)}$$

$V_{m(std)}$ = **20.872** dscf

Using equation for ambient train:

$$V_{m(std)} = 17.64 \times 26.26 \times 1.016 \times \frac{\left(\underline{30.08} + \frac{0.00}{13.6}\right)}{(67.2 + 460)}$$

$V_{m(std)}$ = **26.857** dscf

m_n – Total Particulate Matter Collected, mg
ASTM E2515 Equation (12)

$$m_n = m_p + m_f + m_g$$

Where:

m_p = mass of particulate matter from probe, mg

m_f = mass of particulate matter from filters, mg

m_g = mass of particulate matter from filter seals, mg

Sample Calculation:

Using equation for Train 1 (first hour):

m_n = 0.1 + 1.5 + 0.2

m_n = 1.8 mg

Using equation for Train 1 (post-first hour):

m_n = 0.3 + -0.6 + 0.5

m_n = 0.2 mg

Train 1 aggregate:

m_n = 1.8 + 0.2

m_n = **2.0** mg

Using equation for Train 2:

m_n = 0.2 + 1.2 + 0.4

m_n = **1.8** mg

C_s - Concentration of particulate matter in tunnel gas, dry basis, corrected to standard conditions, g/dsc
ASTM E2515 equation (13)

$$C_s = K_2 \times \frac{m_n}{V_{m(std)}}$$

Where:

K_2	=	Constant, 0.001 g/mg
m_n	=	Total mass of particulate matter collected in the sampling train, mg
$V_{m(std)}$	=	Volume of gas sampled corrected to dry standard conditions, dscf

Sample calculation:

For Train 1:

$$C_s = 0.001 \times \frac{2.0}{20.90}$$

C_s = **0.00010** g/dscf

For Train 2

$$C_s = 0.001 \times \frac{1.8}{20.87}$$

C_s = **0.00009** g/dscf

For Ambient Train

$$C_r = 0.001 \times \frac{0.0}{26.86}$$

C_r = **0.000000** g/dscf

E_T – Total Particulate Emissions, g
ASTM E2515 equation (15)

$$E_T = (C_s - C_r) \times Q_{std} \times \theta$$

Where:

C_s	=	Concentration of particulate matter in tunnel gas, g/dscf
C_r	=	Concentration particulate matter room air, g/dscf
Q_{std}	=	Average dilution tunnel gas flow rate, dscf/hr
θ	=	Total time of test run, minutes

Sample calculation:

For Train 1

E_T = (0.000096 - 0.000000) x 12255.4 x 131 /60

E_T = 2.56 g

For Train 2

E_T = (0.000086 - 0.000000) x 12255.4 x 131 /60

E_T = 2.31 g

Average

E = 2.43 g

Total emission values shall not differ by more than 7.5% from the total average emissions

7.5% of the average =	0.18
Train 1 difference =	0.13
Train 2 difference =	0.13

PR - Proportional Rate Variation
ASTM E2515 equation (16)

$$PR = \left[\frac{\theta \times V_{mi} \times V_s \times T_m \times T_{si}}{\theta_i \times V_m \times V_{si} \times T_{mi} \times T_s} \right] \times 100$$

Where:

θ = Total sampling time, min

θ_i = Length of recording interval, min

V_{mi} = Volume of gas sample measured by the dry gas meter during the “ith” time interval, dcf

V_m = Volume of gas sample as measured by dry gas meter, dcf

V_{si} = Average gas velocity in the dilution tunnel during the "ith" time interval, ft/sec

V_s = Average gas velocity in the dilution tunnel, ft/sec

T_{mi} = Absolute average dry gas meter temperature during the "ith" time interval, ^oR

T_m = Absolute average dry gas meter temperature, ^oR

T_{si} = Absolute average gas temperature in the dilution tunnel during the "ith" time interval, ^oR

T_s = Absolute average gas temperature in the dilution tunnel, ^oR

Sample calculation (for the first 1 minute interval of Train 1):

$$PR = \left(\frac{131 \times 0.15 \times 18.83 \times (133.0 + 460) \times (78.0 + 460)}{1 \times 21.04 \times 19.19 \times (104.2 + 460) \times (74.0 + 460)} \right) \times 100$$

PR = 97 %

PM_R – Particulate emissions for test run, g/hr
ASTM E2780 equation (6)

$$PM_R = 60 (E_T/\theta)$$

Where,

E_T = Total particulate emissions, grams

θ = Total length of full integrated test run, min

Sample Calculation:

E_T (Dual train average) = 2.43 g

θ = 131 min

$PM_R = 60$ x (2.43 / 131)

PM_R = **1.11** g/hr

PM_F – Particulate emission factor for test run, g/dry kg of fuel burned
ASTM E2780 equation (7)

$$PM_F = E_T/M_{FTAdb}$$

Sample Calculation:

E_T (Dual train average) = 2.43 g

M_{Bdb} = 4.75 kg

PM_F = 2.43 / 4.75

PM_F = **0.51** g/kg

Section 4

LABELING & OWNER'S MANUAL

Installation	Clearance	Connector	A	B	C	D	E	F	G	H	I¹	I²	J	K1	K2	M	N
Residential	Standard	Single Wall	15	12	22	12.5	15	5.5	6	16							
Residential or Mobile home	Reduced	Double Wall	9.5	7	21.5	12.5	14	5	6	16							
Insert	Standard	UL 1777 Liner							6	16	20	8.5	7	8.5	7.5		
Alcove	Reduced	Double Wall	9.5	7	21.5	12.5			6	16						51	72

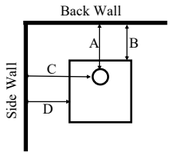

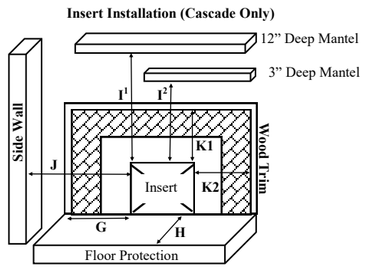

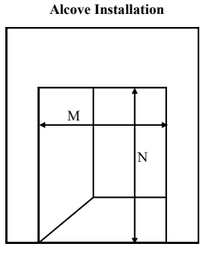

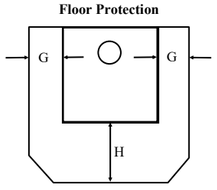

ALL DIMENSIONS ARE IN INCHES.

- ☐ ASPEN LE-1
- ☐ TAMARACK LE-1
- ☐ ABERDEEN LE-1
- ☐ ALPINE LE-1

INSTALL AND USE ONLY IN ACCORDANCE WITH KUMA STOVES' INSTALLATION AND OPERATION INSTRUCTIONS. CONTACT LOCAL BUILDING OR FIRE OFFICIALS ABOUT RESTRICTIONS AND INSTALLATION INSPECTION IN YOUR AREA. REFER TO INSTALLATION INSTRUCTIONS FOR PRECAUTIONS REQUIRED FOR PASSING A CHIMNEY THROUGH A COMBUSTIBLE WALL OR CEILING.

ROOM HEATER, SOLID FUEL TYPE, ALSO FOR USE IN MOBILE HOMES. FOR USE WITH SOLID FUEL ONLY. USE ONLY SEASONED CORDWOOD. DO NOT CONNECT THIS UNIT TO A FLUE SERVICING ANOTHER APPLIANCE. DO NOT USE GRATE OR ELEVATE FIRE - BUILD WOOD FIRE DIRECTLY ON FIREBRICK. REPLACE GLASS ONLY WITH 5mm CERAMIC. ATTACH LEGS OR PEDESTAL USING INSTALLTION INSTRUCTIONS. BLOWER (KA-BL-05, KA-BL-03) ELECTRICAL RATING: 115 VOLT, 18 WATT, 60 HERTZ. DO NOT ROUTE POWER CORD BENEATH HEATER. REPLACE CATALYST ONLY WITH KUMA MODEL: KR-CT-01

USE ONLY LISTED CHIMNEY SYSTEMS THAT ARE 6" DIAMETER U.L. 103 TYPE HT, ALL FUEL, OR SOLID FUEL. MASONRY CHIMNEY SHOULD BE LISTED TO UL 1777. ONLY INSTALL INSERT INTO MASONRY OR UL127 FACTORY BUILT FIREPLACE. INSERT INSTALLATION MUST USE LISTED STAINLESS STEEL LINER. USE ONLY 24 MSG BLACK OR 25 MSG BLUED STEEL SINGLE WALL CONNECTOR FOR STANDARD CLEARANCE. USE ONLY LISTED DOUBLE WALL CONNECTOR FOR REDUCED CLEARANCE AND MOBILE HOMES. SEE DIAGRAMS FOR STANDARD AND REDUCED CLEARANCE DIMENSIONS. USE ONLY U.L. 1618 TYPE 1 (EMBER PROTECTION) OR TYPE 2 (R-VALUE 1.0) HEARTH PAD OR EQUIVALENT. SEE DIAGRAM FOR HEARTH DIMENSIONS.

This wood heater needs periodic inspection and repair for proper operation. Consult the owner's manual for further information. It is against federal regulations to operate this wood heater in a manner inconsistent with the operating instruction in the owner's manual

OMNI-Test Laboratories Inc. Portland OR, USA

MANUFACTURED BY:
KUMA STOVES INC
50145 N OLD HWY 95
RATHDRUM ID 83858

MODEL NAME: K-181

Serial Number

Emissions Test Report #: 0123WM013E Safety tested to UL 1482-2011 (R2015) **Report #'s 0123WS011S and 0123WN011S**

CAUTION: HOT WHILE IN OPERATION - DO NOT TOUCH - KEEP CHILDREN AND CLOTHING AWAY - CONTACT MAY CAUSE SKIN BURNS. SEE NAMEPLATE AND INSTRUCTIONS. KEEP FURNISHINGS AND OTHER COMBUSTIBLE MATERIALS A CONSIDERABLE DISTANCE FROM THE APPLIANCE. DO NOT OVERFIRE - IF HEATER OR CHIMNEY CONNECTOR GLOWS, YOU ARE OVERFIRING. INSPECT AND CLEAN CHIMNEY FREQUENTLY - UNDER CERTAIN CONDITIONS OF USE, CREOSOTE BUILDUP MAY OCCUR RAPIDLY. DO NOT PASS CONNECTOR PIPE THROUGH COMBUSTIBLE WALLS OR CEILINGS. DO NOT OBSTRUCT BENEATH THE HEATER.

☐ JAN ☐ FEB ☐ MAR ☐ APR ☐ MAY ☐ JUN ☐ JUL ☐ AUG ☐ SEP ☐ OCT ☐ NOV ☐ DEC ☐ 2019 ☐ 2020 ☐ 2021 ☐ 2022

U.S. ENVIRONMENTAL PROTECTION AGENCY: Certified to comply with 2020 particulate emission standards using crib wood. 1.08 Grams per hour.

Model # K-181:

Aspen LE-1
Tamarack LE-1
Aberdeen LE-1

Tested and listed by OMNI-Test Laboratories Inc.
Portland OR, USA

Emissions tested to
ASTM E2515 and ASTM E2780
Report# 0123WM013E

Safety tested to UL 1482-2011 (R2015)
Report # 0123WS011S

INSTALLATION AND OPERATING INSTRUCTIONS

SAVE THESE INSTRUCTIONS

Model # K-181:

Alpine LE-1

Tested and listed by OMNI-Test Laboratories Inc.
Portland OR, USA

Emissions tested to
ASTM E2515 and ASTM E2780
Report# 0123WM013E

Safety tested to UL 1482-2011 (R2015)
Report # 0123WS011S

INSTALLATION AND OPERATING INSTRUCTIONS

SAVE THESE INSTRUCTIONS

This manual describes the installation and operation of the Kuma Model K-181 Catalytic equipped wood heater. This heater meets the 2020 U.S. Environmental Protection Agency's crib wood emission limits for wood heaters sold after May 15, 2020. Under specific test conditions this heater has been shown to deliver heat at rates ranging from 12,764 to 29,153 Btu/hr. and an efficiency of 78% (High Heating Value). Please visit https://www.kumastoves.com/content/page/EPA for a detailed explanation of stove efficiencies. Particulate emissions are 1.08 grams per hour and average CO emissions are 0.45 grams per minute.

Please read the safety precautions and the entire installation and operation instructions carefully. Failure to properly install and maintain your wood stove can result in an unsafe condition.

TABLE OF CONTENTS

SECTION 1 - SAFETY PRECAUTIONS

SECTION 2 - SPECIFCATIONS

SECTION 3 - INSTALLATION INSTRUCTIONS

SECTION 4 - OPERATING INSTRUCTIONS

SECTION 5 - CATALYST INFORMATION

SECTION 6 - MAINTENANCE

SECTION 7 - TROUBLESHOOTING

SECTION 8 - WARRANTY

SECTION 1 - WARNINGS

WARNING

- If this stove is not properly installed, a house fire can occur. For your protection, follow the installation instructions provided. We recommend contacting local building or fire officials regarding restrictions and installation inspection requirements in your area. **We also recommend that your Kuma stove be installed by a properly trained and licensed installer, preferably an NFI (National Fireplace Institute) expert.**
- **DO NOT CONNECT THIS UNIT TO A CHIMNEY FLUE SERVICING ANOTHER APPLIANCE.**
- **Do not burn garbage or flammable fluids such as gasoline, naptha or engine oil**. Do not use charcoal lighter fluid or similar liquids to start or "freshen up" a fire in this heater. Keep all such fluids well away from the heater while in use. Storing these fluids near a stove could cause a fire.
- **DO NOT CONNECT TO ANY AIR DISTRIBUTION OR DUCT SYSTEM.**
- **DO NOT OVERFIRE.** If any part of the stove or chimney glows, the stove is in an over fire condition. If this happens, shut the air control off immediately. Over firing can cause damage.
- **WARNING: DO NOT INSTALL IN A SLEEPING ROOM.**
- **An improperly drafting stove can cause smoke and carbon monoxide to enter the home. Smoke detectors and carbon monoxide monitors are recommended to be installed in the same room as this heater.**
- **CAUTION: THE STRUCTURAL INTEGRITY OF THE FLOOR, WALLS, ROOF/CEILING, AND VAPOR BARRIERS MUST BE MAINTAINED.**
- **DO NOT USE SINGLE WALL PIPE OR CONNECTOR PIPE FOR ANY CHIMNEY APPLICATION, EXTERIOR OR THROUGH THE WALL OR CEILING.** Single wall pipe may only be used as a connection between the stove and an approved masonry or stainless steel chimney. **Single wall pipe may not be used as a connector in mobile homes.**
- When installing into an existing masonry or metal chimney, examine the chimney system carefully. If you have any questions, seek professional advice. We recommend having existing chimneys cleaned and inspected by a qualified professional prior to the installation of your new stove.
- **NOTE ALL MINIMUM CLEARANCE REQUIREMENTS TO COMBUSTIBLES.** Installation must comply with minimum clearances as listed in this manual. **Clearances may only be reduced by means approved by the regulatory authority.**
- Do not operate this stove with the door in an open position, except for cracking open during start-up. Continued operation with the door open can cause overheating of the unit, and expose embers to nearby combustibles.
- **Do not operate with broken glass. Do not abuse glass such as striking or slamming the door.**
- This stove must be connected to a minimum 6" diameter listed chimney that complies with U.L. type 103HT factory built chimney or a code approved masonry chimney. When installing into masonry chimneys, a U.L. 1777 approved liner must be installed.
- When connecting single wall or double wall connector pipe to the stove and chimney, use 3 screws per pipe joint including 3 screws securing the pipe to the stove. Depending on the type of double wall pipe you are using, it may also be necessary to fasten it at the chimney.
- Use only approved components for Chimney and Connector. Field fabricated or "makeshift" components are not allowed and can cause a fire.
- **DO NOT USE THIS STOVE WITHOUT THE BAFFLE BOARDS AND CERAMIC INSULATION PACKAGED WITH YOUR STOVE.**
- When connecting this stove to a masonry chimney, make sure you observe all applicable clearances including walls, ceilings and other combustible material. A masonry chimney must be minimum 6" diameter and constructed with a liner according to NFPA code 211. If you have any questions about the condition or the code compliance of your masonry chimney, please speak with a qualified professional.
- HOT WHILE IN OPERATION. KEEP CHILDREN, CLOTHING AND FURNITURE AWAY. CONTACT MAY CAUSE SKIN BURNS.

SECTION 2 - SPECIFICATIONS

CERTIFICATION TAG

INSTALL AND USE ONLY IN ACCORDANCE WITH KUMA STOVES' INSTALLATION AND OPERATION INSTRUCTIONS. CONTACT LOCAL BUILDING OR FIRE OFFICIALS ABOUT RESTRICTIONS AND INSTALLATION INSPECTION IN YOUR AREA. REFER TO INSTALLATION INSTRUCTIONS FOR PRECAUTIONS REQUIRED FOR PASSING A CHIMNEY THROUGH A COMBUSTIBLE WALL OR CEILING.

ROOM HEATER, SOLID FUEL TYPE, ALSO FOR USE IN MOBILE HOMES. FOR USE WITH SOLID FUEL ONLY. USE ONLY SEASONED CORDWOOD. DO NOT CONNECT THIS UNIT TO A FLUE SERVICING ANOTHER APPLIANCE. DO NOT USE GRATE OR ELEVATE FIRE - BUILD WOOD FIRE DIRECTLY ON FIREBRICK. REPLACE GLASS ONLY WITH 5mm CERAMIC. ATTACH LEGS OR PEDESTAL USING INSTALLTION INSTRUCTIONS. BLOWER (KA-BL-05, KA-BL-03) ELECTRICAL RATING: 115 VOLT, 18 WATT, 60 HERTZ. DO NOT ROUTE POWER CORD BENEATH HEATER. REPLACE CATALYST ONLY WITH KUMA MODEL: KR-CT-01

USE ONLY LISTED CHIMNEY SYSTEMS THAT ARE 6" DIAMETER U.L. 103 TYPE HT, ALL FUEL, OR SOLID FUEL. MASONRY CHIMNEY SHOULD BE LISTED TO UL 1777. ONLY INSTALL INSERT INTO MASONRY OR UL127 FACTORY BUILT FIREPLACE. INSERT INSTALLATION MUST USE LISTED STAINLESS STEEL LINER. USE ONLY 24 MSG BLACK OR 25 MSG BLUED STEEL SINGLE WALL CONNECTOR FOR STANDARD CLEARANCE. USE ONLY LISTED DOUBLE WALL CONNECTOR FOR REDUCED CLEARANCE AND MOBILE HOMES. SEE DIAGRAMS FOR STANDARD AND REDUCED CLEARANCE DIMENSIONS. USE ONLY U.L. 1618 TYPE 1 (EMBER PROTECTION) OR TYPE 2 (R-VALUE 1.0) HEARTH PAD OR EQUIVALENT. SEE DIAGRAM FOR HEARTH DIMENSIONS.

This wood heater needs periodic inspection and repair for proper operation. Consult the owner's manual for further information. It is against federal regulations to operate this wood heater in a manner inconsistent with the operating instruction in the owner's manual

OMNI-Test Laboratories Inc. Portland OR, USA

MANUFACTURED BY:
KUMA STOVES INC
50145 N OLD HWY 95
RATHDRUM ID 83858

MODEL NAME: K-181

Serial Number

Emissions Test Report #: 0123WM013E Safety tested to UL 1482-2011 (R2015) **Report #'s 0123WS011S and 0123WN011S**

CAUTION: HOT WHILE IN OPERATION - DO NOT TOUCH - KEEP CHILDREN AND CLOTHING AWAY - CONTACT MAY CAUSE SKIN BURNS. SEE NAMEPLATE AND INSTRUCTIONS. KEEP FURNISHINGS AND OTHER COMBUSTIBLE MATERIALS A CONSIDERABLE DISTANCE FROM THE APPLIANCE. DO NOT OVERFIRE - IF HEATER OR CHIMNEY CONNECTOR GLOWS, YOU ARE OVERFIRING. INSPECT AND CLEAN CHIMNEY FREQUENTLY - UNDER CERTAIN CONDITIONS OF USE, CREOSOTE BUILDUP MAY OCCUR RAPIDLY. DO NOT PASS CONNECTOR PIPE THROUGH COMBUSTIBLE WALLS OR CEILINGS. DO NOT OBSTRUCT BENEATH THE HEATER.

☐ JAN ☐ FEB ☐ MAR ☐ APR ☐ MAY ☐ JUN ☐ JUL ☐ AUG ☐ SEP ☐ OCT ☐ NOV ☐ DEC ☐ 2019 ☐ 2020 ☐ 2021 ☐ 2022

U.S. ENVIRONMENTAL PROTECTION AGENCY: Certified to comply with 2020 particulate emission standards using crib wood. 1.08 Grams per hour.

Installation	Clearance	Connector	A	B	C	D	E	F	G	H	I¹	I²	J	K1	K2	M	N
Residential	Standard	Single Wall	15	12	22	12.5	15	5.5	6	16							
Residential or Mobile home	Reduced	Double Wall	9.5	7	21.5	12.5	14	5	6	16							
Insert	Standard	UL 1777 Liner							6	16	20	8.5	7.5	8.5	7.5		
Alcove	Reduced	Double Wall	9.5	7	21.5	12.5			6	16						51	72

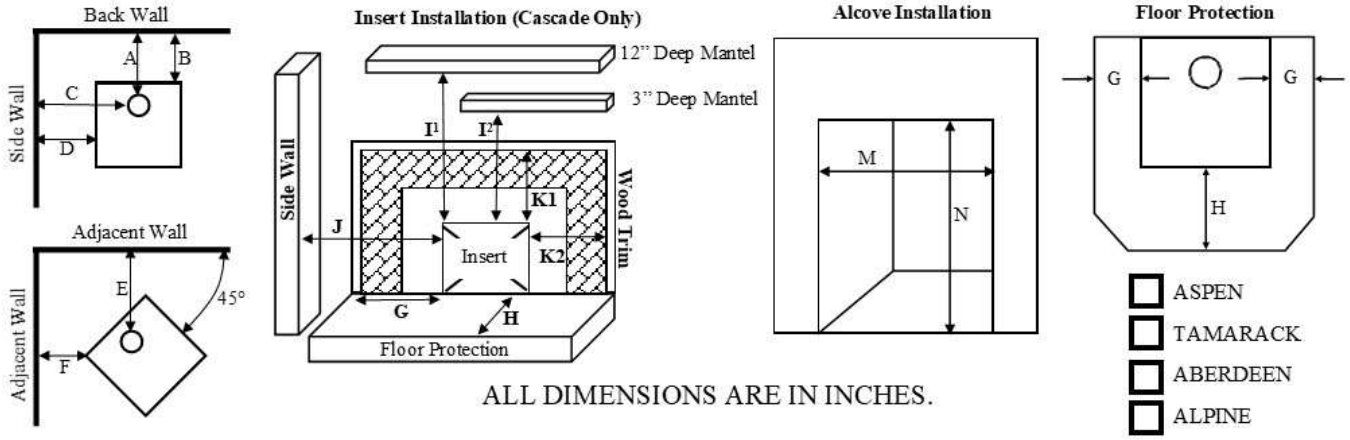

ALL DIMENSIONS ARE IN INCHES.

TAMARACK DIMENSIONAL DRAWINGS

All dimensions are in inches.

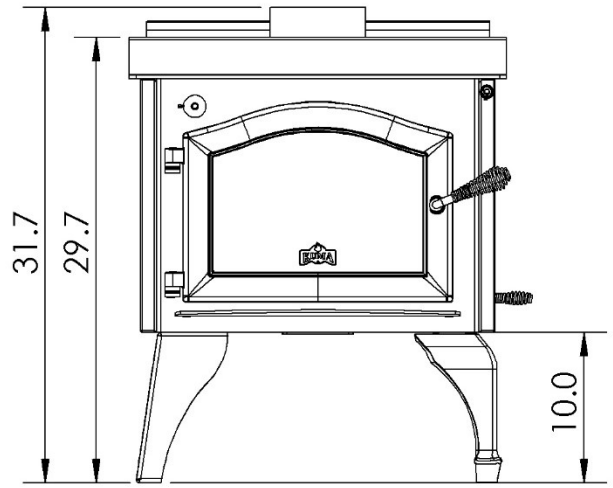

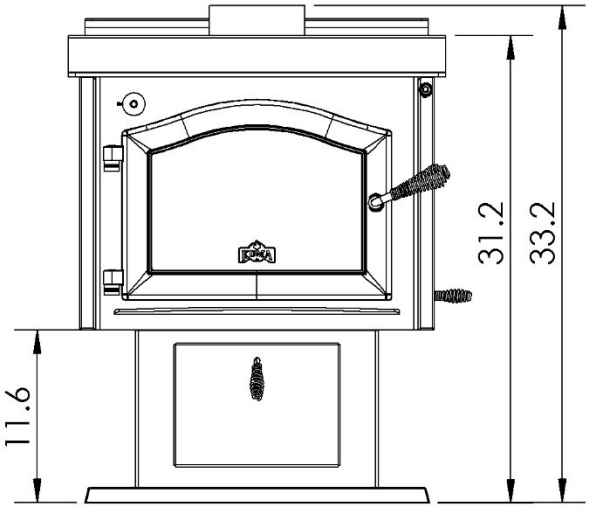

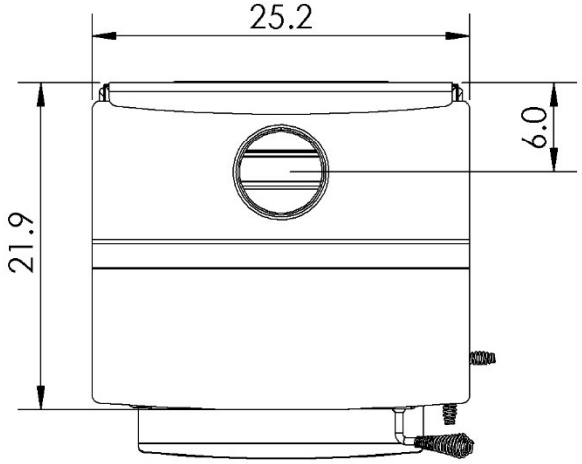

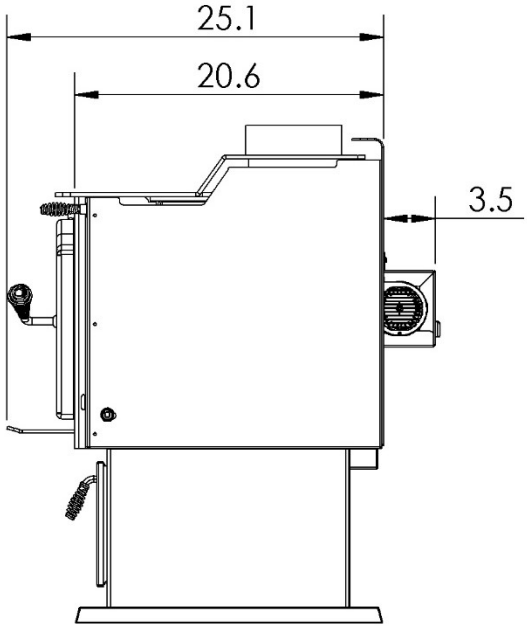

ASPEN DIMENSIONAL DRAWINGS

All dimensions are in inches.

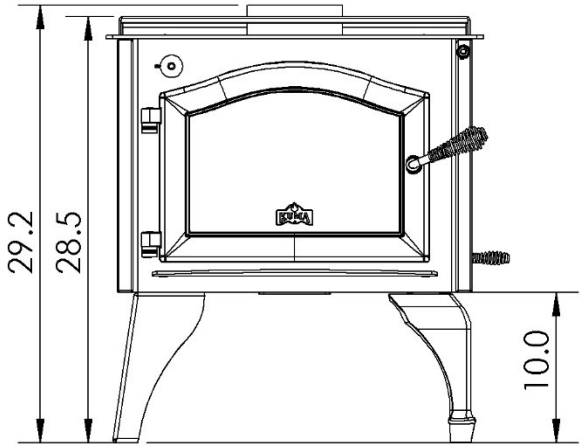

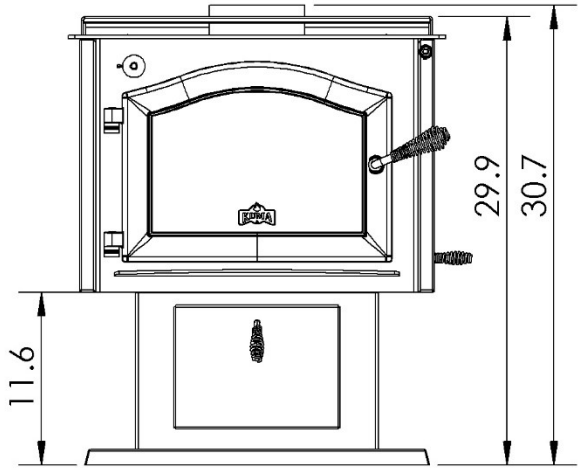

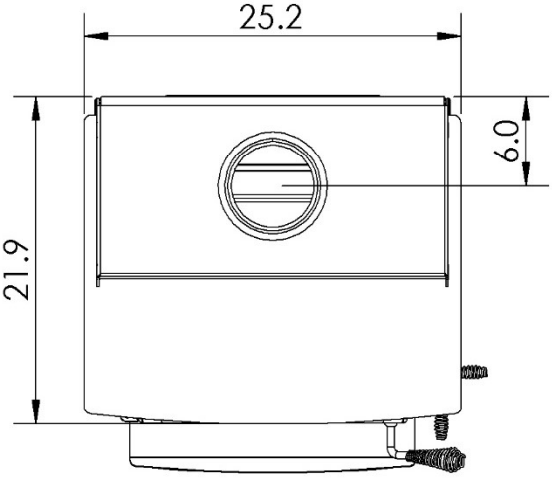

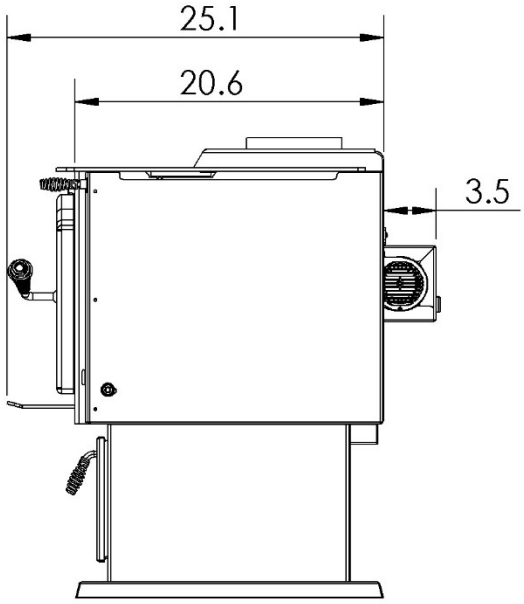

ABERDEEN DIMENSIONAL DRAWINGS

All dimensions are in inches.

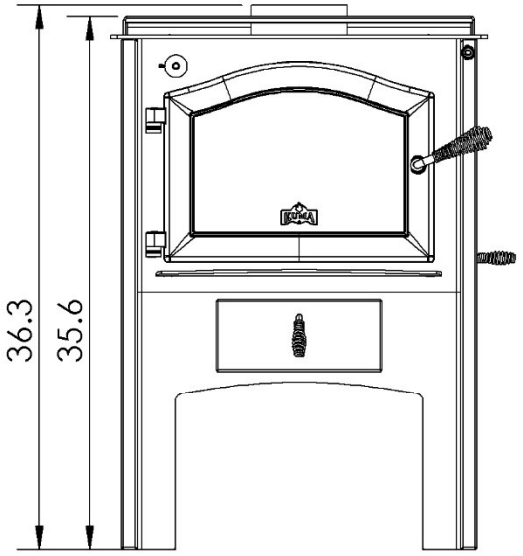

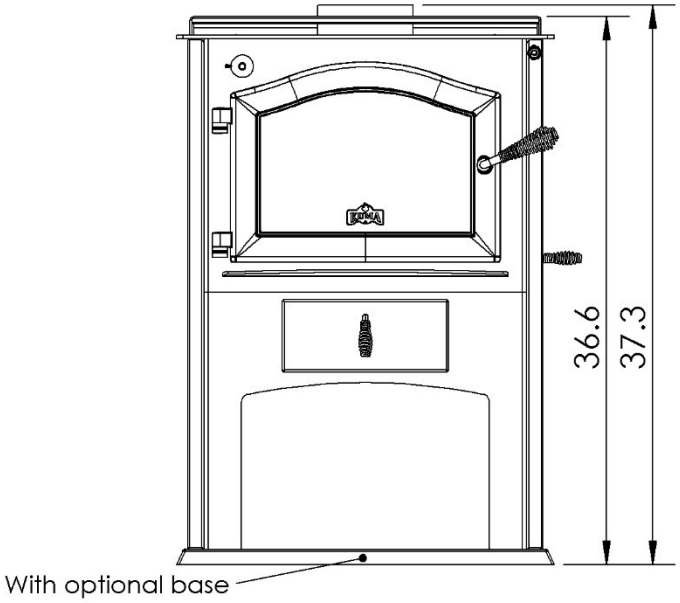

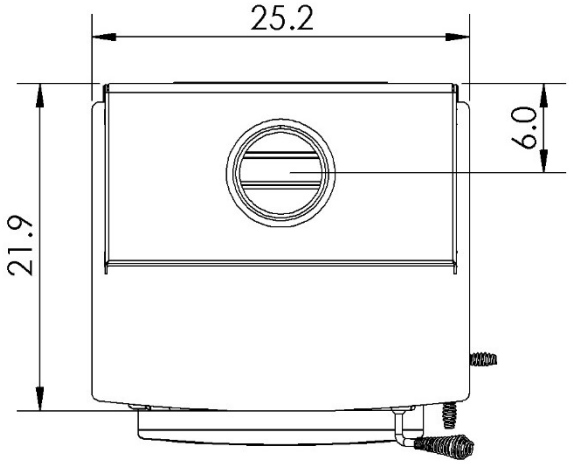

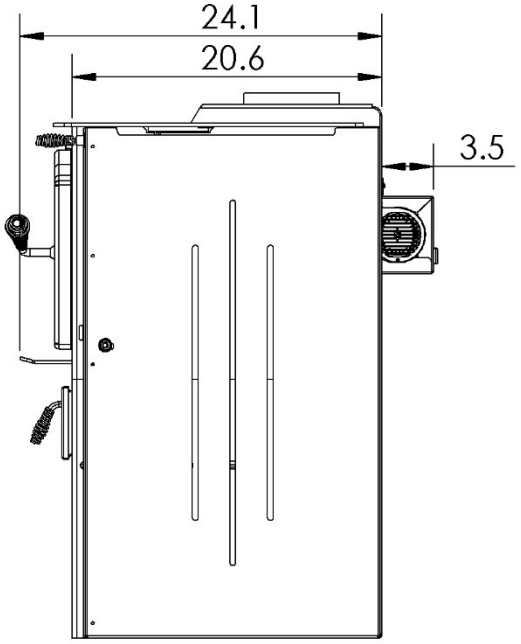

MINIMUM CLEARANCE REQUIREMENTS

Pipe clearances (A,C,E) are measured to the outside diameter of the pipe. Pipe diameter will vary by brand so when planning your installation, make sure the stove clearances (B,D,F) AND the pipe clearances (A,C,E) are equal to or greater than the minimum clearances. Always follow local building codes. These clearances may be reduced only by using approved methods found in NFPA 211.

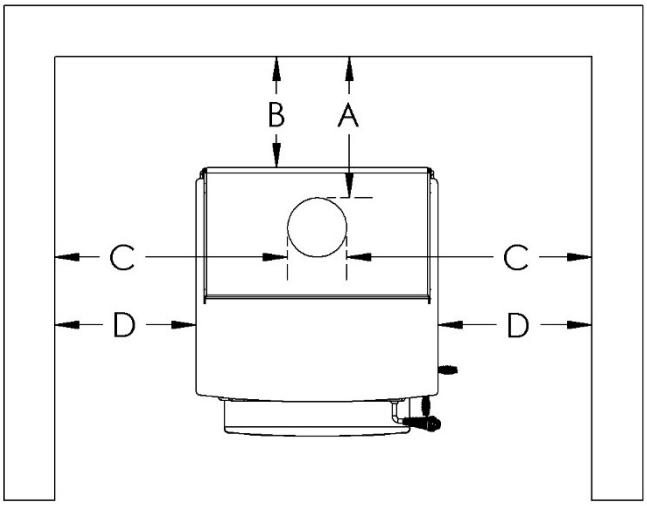

	Minimum Clearance with single-wall pipe	Minimum clearance with double-wall pipe
A	15″	9.5″
B	12″	7″
C	22″	21.5″
D	12.5″	12.5″
E	15″	14″
F	5.5″	5″
L	18.5″	18.5″
N	72″	72″

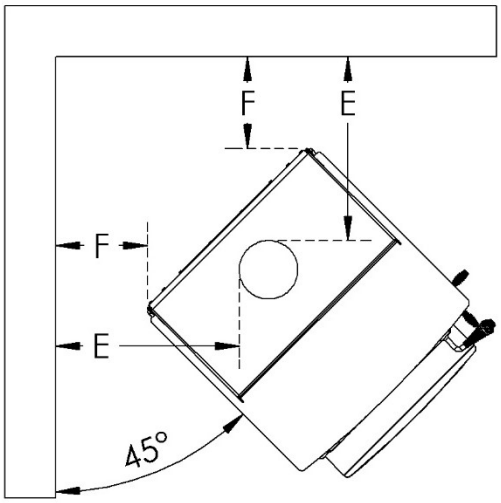

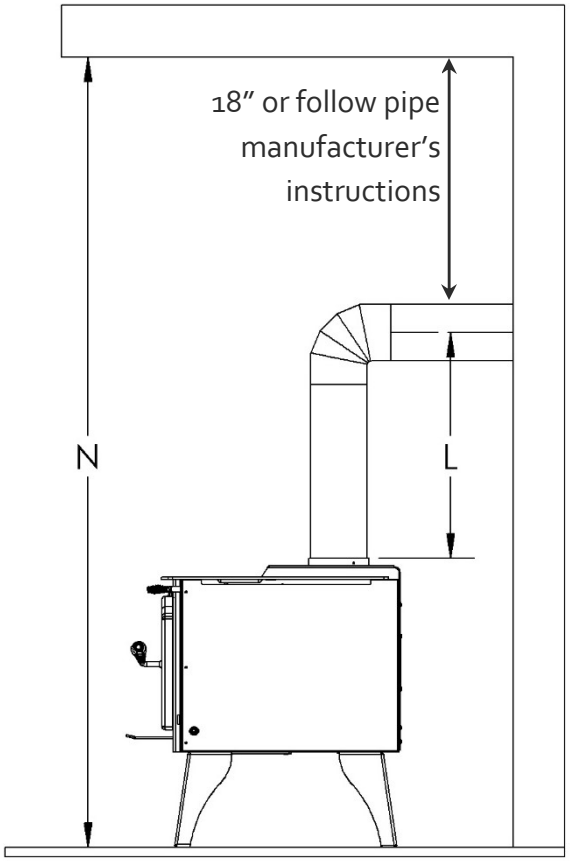

Alcove Dimensions: (must use double-wall pipe)	Minimum 51″ wide	Minimum 72″ tall

ALPINE DIMENSIONAL DRAWINGS

All dimensions are in inches.

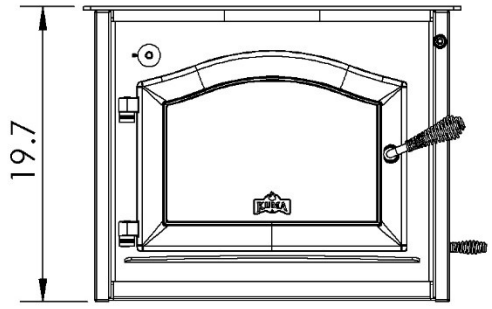

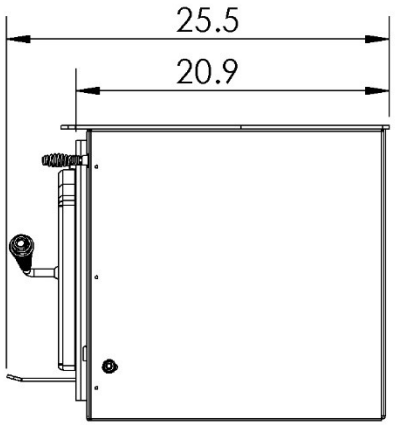

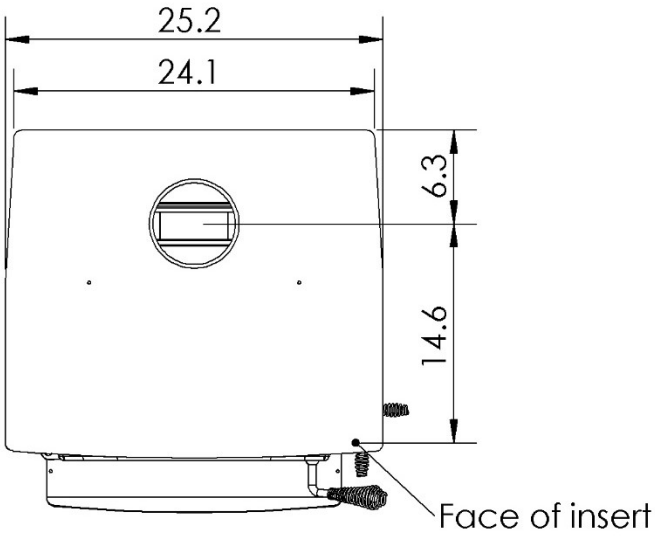

ALPINE MINIMUM CLEARANCE REQUIREMENTS

All dimensions are in inches. Side clearances are to the side wall of the insert. Top clearances are to the top plate of the insert.

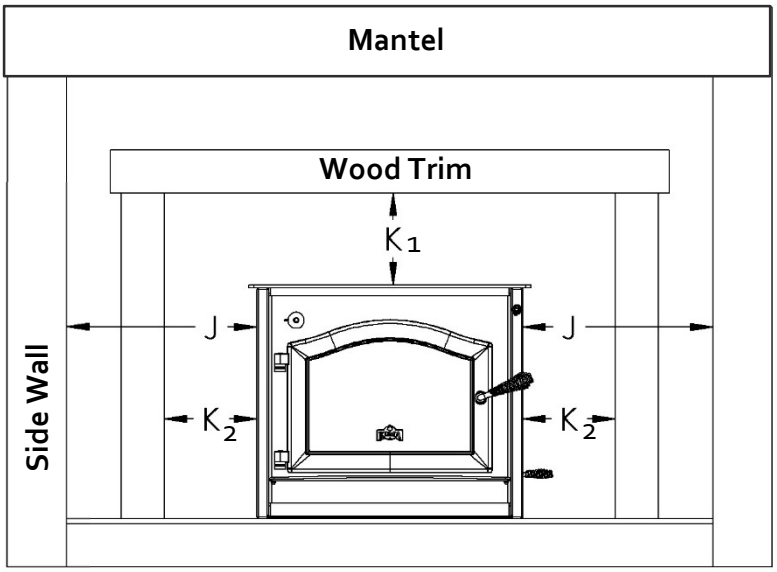

Minimum Clearances	
J – Insert to side wall	7.5"
K1 – Insert to wood trim. Trim must be no thicker than 3/4"	8.5"
K2 – Insert to wood trim. Trim must be no thicker than ¾"	7.5

MANTEL CLEARANCE

Your mantel can be 12" deep or less. A 12" mantel must be a minimum of 20" above the top plate of the insert. If your mantel is shallower than 12" you can use the chart below to determine the minimum height above the top plate of the insert.

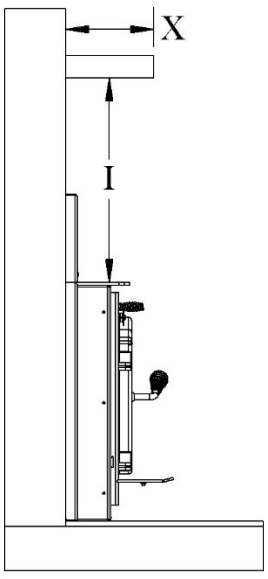

Mantel Depth (X)	Minimum Clearance (I)
3	8.5
4	9.875
5	11.125
6	12.375
7	13.625
8	15
9	16.25
10	17.5
11	18.75
12	20

- It is highly recommended that this stove is installed by a qualified professional certified by the National Fireplace Institute.
- The structural integrity of the floor, walls and ceiling/roof must be maintained. Use additional bracing if required. Never cut a load bearing wall or engineered truss.
- NEVER INSTALL A STOVE IN A SLEEPING ROOM
- This stove is heavy: Get help from another person and use proper lifting techniques

The safety standards referenced in this manual are easy to find online. Products that meet these standards will be readily available from your dealer. Refer to this glossary of terms for a better understanding of these standards:

Standard	Description
UL 103	Covers the safety requirements for factory-built (metal) chimneys that vent wood stoves. Chimney manufacturers can either comply with a 1700° or a 2100° flue-gas temperature test.
UL 103HT	Chimney manufacturers that choose to comply with the 2100° flue-gas temperature test will receive the designation of a 103HT chimney system. HT stands for High Temperature and virtually all modern wood stoves will require this type of chimney.
UL 1777	Covers the safety requirements for chimney liners that are installed into masonry fireplaces. Your chimney liner will meet the safety requirements of UL 1777 only if the installation instructions for the liner are followed.
NFPA 211	A publication put out by the National Fire Protection Association that details the proper installation of wood stoves, chimneys, fireplaces, and venting systems.

FLOOR PROTECTION REQUIREMENTS

Floor protection must be non-combustible. Floor protection must be underneath the stove and extend to the sides and front of the stove as shown below. Side protection (G) is measured to the top plate of the stove. Front protection (H) is measured to the face of the stove.

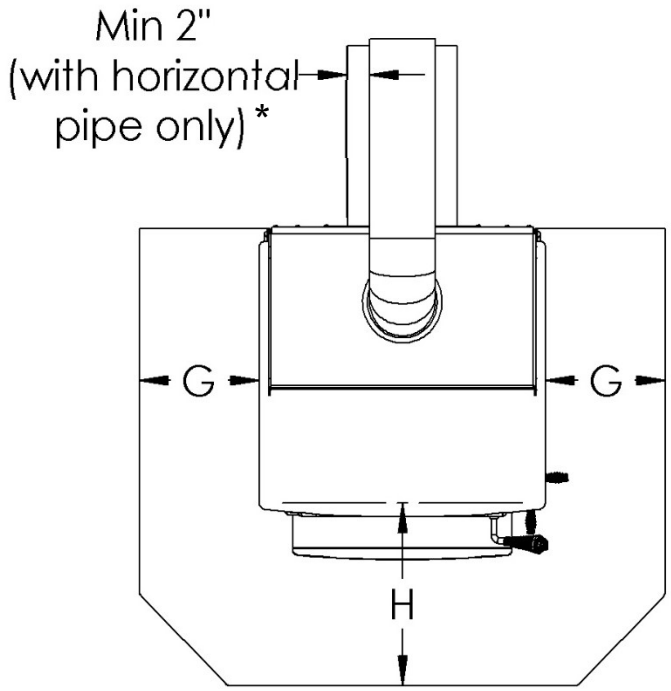

G	H	Type
6"	16"	Type 1 (ember protection) No insulation R-value required.

***Through Wall Installations: Hearth must extend underneath and 2" to either side of the horizontal connector pipe.**

STOVE ASSEMBLY

Uncrate the stove. Each piece of the stove will be included in a separate box. Follow the instructions located in each box to install the components of the stove. Assemble the stove in the following order:

1. Lay the stove on to its back
2. Install the Ash Pan Kit (optional)
3. Install the Legs or Pedestal Kit
4. Carefully set the stove upright
5. Install the catalyst and flame diffuser
6. Install the door
7. Install the blower (optional)

INTAKE AIR REQUIREMENTS

Option 1 (Recommended): If you are drawing room air for the stove.

This is the easiest air intake method for your any Kuma LE wood stove. Simply assemble the stove with it's legs or pedestal base and you are done!

You do not need to remove or knock-out any cover plate.

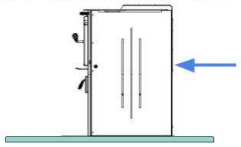

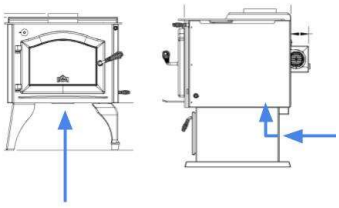

All Kuma LE stoves are factory configured to draw air in through a 4" round hole on the bottom of the stove or pedestal.

Option 2: If you are installing outside air up through your floor.

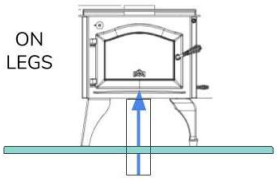

<u>Do not</u> remove the knock-out on the back of the stove. Follow the instructions in the KA-OA-1 Outside air kit.

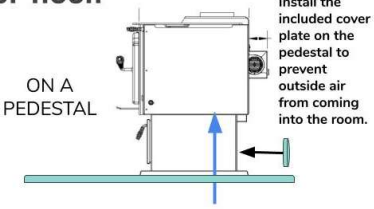

<u>Do not</u> remove the knock-out on the back of the stove. Follow the instructions in the KA-OA-1 Outside air kit.

Option 3: If you are installing outside air through your outside wall.

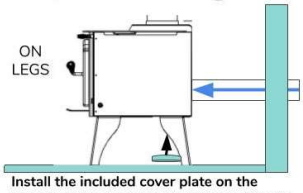

Install the included cover plate on the bottom of the stove to prevent outside air from coming into the room.

<u>You will</u> remove the knock-out on the back of the stove. Follow the instructions in the KA-OA-1 Outside air kit.

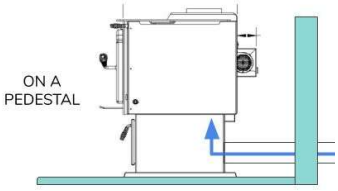

<u>Do not</u> remove the knock-out on the back of the stove. Follow the instructions in the KA-OA-1 Outside air kit.

Special instructions for the Aberdeen

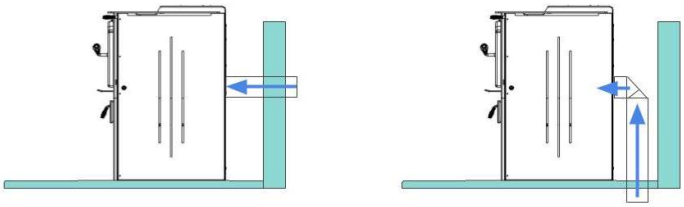

If installing outside air, it must come to the 4" hole on the back of the stove using the KA-OA-1 Outside air kit.

CHIMNEY AND CONNECTOR PIPE REQUIREMENTS

A properly installed and maintained venting system is critical to the safe operation of your wood stove. This stove may be connected to a factory built **all fuel chimney system** that has been safety tested to the UL-103HT standard or to a lined **masonry chimney** that meets the standards of NFPA 211. The **connector pipe** is the portion of the venting system that connects the stove to the chimney system. Chimney connector must be 24ga. single wall black stove pipe or a listed double wall connector pipe. Listed double wall connector pipe is required for mobile home installation.

When choosing the location for your stove, decide on a central location in the main living area of the home. Uninhabited areas of the home such as an uninsulated basement or a garage would be an inefficient location for the heater. Also consider not placing the chimney too close to your neighbors or in a valley that would cause a nuisance or unhealthy outdoor air quality. For proper draft, the chimney must exit the roof a minimum of 3 feet and at least 2 feet above any portion of the roof that is within 10 feet of the chimney.

Minimum Flue Height Recommendations	
No offsets in the chimney	14 ft
30° or 45° offsets in the chimney	15 ft
90° offsets in the chimney	16 ft.
90° offsets with 2-3 feet of horizontal run	20 ft.
90° offsets into exterior chimney	22 ft.

WHEN CONNECTING TO AN ALL-FUEL CHIMNEY SYSTEM

- For complete installation instructions, carefully follow the installation manual that came with your all fuel chimney system.
- Your chimney must meet the UL-103HT standard. Do not mix different brands of chimney parts.
- Do not use connector pipe to pass through an attic, closet, wall, floor or ceiling.
- Use only prefabricated listed chimney and connector pipe. Field fabricated or "makeshift" parts could result in a chimney or house fire.
- Inspect all chimney parts for damage. Do not use any damaged chimney parts

An all-fuel chimney system consists of prefabricated metal chimney parts that have been designed and tested for use with modern wood stoves. Examples of 103 HT systems include:

- **DuraTech manufactured by DuraVent**
- **Excel manufactured by ICC Chimney**
- **Ultra Temp manufactured by Selkirk**
- **Temp/Guard manufactured by Metal-Fab**

When choosing a location for your chimney you will need to study the clearance requirements for both the stove and the chimney. Many chimney systems require a 2" air space around the pipe. **Refer to the clearance diagrams in section 2 for minimum clearances around this stove.** You will need to install supports, braces, shielding and firestops according to the chimney manufacturer's recommendations. When passing the chimney through an attic space an insulation shield must be used to ensure that no insulation can contact the chimney. For safety, the chimney must penetrate the roof a minimum of 3 feet AND must be at least 2 feet higher than any part of the roof that is within 10 feet of the chimney. For proper draft, the venting system (chimney + connector pipe) should be at least 14 feet from the stove top to the venting cap. If you live in a snowy region and you have a metal roof, consider adding snow breaks or diverters to your roof to prevent damage from sliding snow and ice.

Scan to see the Kuma snow diverter engineered for metal roofs:

ADDITIONAL REQUIREMENTS FOR MANUFACTURED (MOBILE) HOMES

- The structual integrity of the mobile home floor, wall and ceiling/roof must be maintained.
- Do not install in a sleeping room of a mobile home.

- ☐ An outside air kit (KA OA 1) is required for all mobile home installations. Follow the instructions located in the box.
- ☐ Double wall connector pipe is required for all mobile homes.
- ☐ Using 8-gauge ground wire and appropriate connectors, you must drill through the hearth and connect the stove to the metal frame underneath the mobile home.
- ☐ When required by local code, you will need to fasten the stove to the floor of the mobile home.

Typical installation of an all fuel chimney system

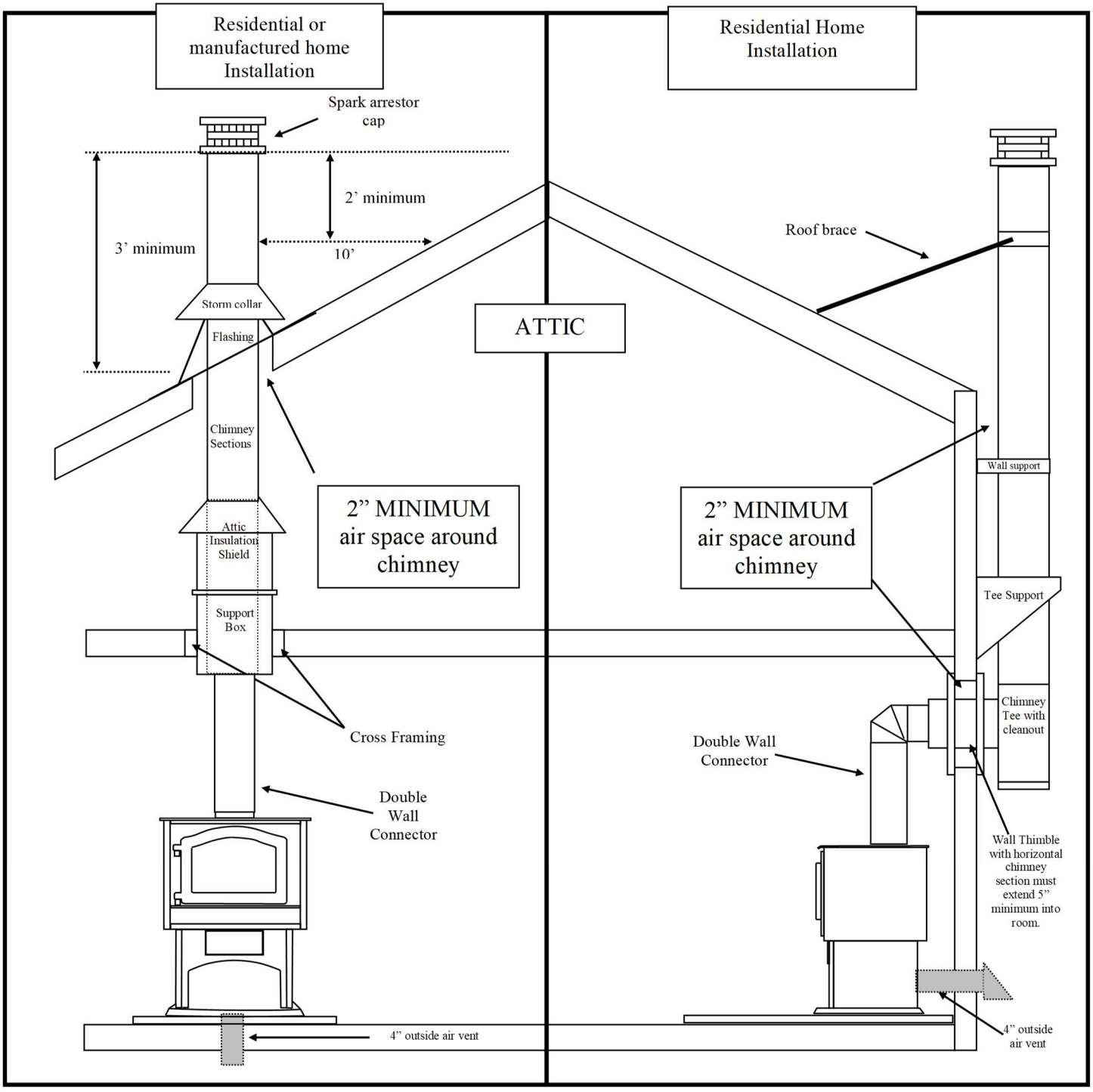

WHEN CONNECTING TO A MASONRY CHIMNEY

- WHEN PENETRATING A COMBUSTIBLE WALL TO CONNECT TO A MASONRY CHIMNEY YOU MUST BE CERTAIN THAT THE WALL PASS THROUGH IS A SAFE AND CODE APPROVED METHOD such as the NFPA 211 standard. See Figure 6-7.5 from the **NFPA 211-2016, *Standard for Chimneys*** below

Your masonry chimney must be built according to an approved method of construction such as the NFPA 211 standard. Visit nfpa.org for free access to the standard.

1. Install a flue liner that meets the type HT requirements (2100°) per the UL 1777 standard.
2. Have a certified chimney inspector clean and inspect your chimney to make sure that there are no code violations, cracks, damaged mortar joints, or blockages. If your chimney is damage or does not meet code requirements, you may need to re-line or re-build your chimney.
1. Kuma recommends that an insulated chimney liner always be installed into a masonry chimney for improved performance and ease of cleaning. Chimney liners should not be smaller than 6" diameter or the equivalent cross-sectional area of 28 square inches. Any reduction in flue size may result in smoking or poor performance.
3. Equally important to the construction of the chimney is the connection between the stove and the chimney. When passing through a combustible wall, use the following diagram to make sure that it is a safe method.

FIGURE 6-7.5 Chimney connector systems and clearances from combustible walls for residential heating appliances.

System		Clearance (in.)/(mm)
A	Minimum 3.5 in. (90 mm) thick brick masonry wall framed into combustible wall with a minimum of 12-in. (305-mm) brick separation from clay liner to combustibles. Fireclay liner (ASTM C 315, *Standard Specification for Clay Fire Linings*, or equivalent), minimum ⅝-in. (16-mm) wall thickness, shall run from outer surface of brick wall to, but not beyond, the inner surface of chimney flue liner and shall be firmly cemented in place.	12/305
B	Solid-insulated, listed factory-built chimney length of the same inside diameter as the chimney connector and having 1 in. (25.4 mm) or more of insulation with a minimum 9-in. (229-mm) air space between the outer wall of the chimney length and combustibles. The inner end of the chimney length shall be flush with the inside of the masonry chimney flue and shall be sealed to the flue and to the brick masonry penetration with non-water-soluble refractory cement. Supports shall be securely fastened to wall surfaces on all sides. Fasteners between supports and the chimney length shall not penetrate the chimney liner.	9/229
C	Sheet steel chimney connector, minimum 24 gauge [0.024 in. (0.61 mm)] in thickness, with a ventilated thimble, minimum 24 gauge [0.024 in. (0.61 mm)] in thickness, having two 1-in. (25.4-mm) air channels, separated from combustibles by a minimum of 6 in. (152 mm) of glass fiber insulation. Opening shall be covered, and thimble supported with a sheet steel support, minimum 24 gauge [0.024 in. (0.61 mm)] in thickness. Supports shall be securely fastened to wall surfaces on all sides and shall be sized to fit and hold chimney section. Fasteners used to secure chimney section shall not penetrate chimney flue liner.	6/152
D	Solid-insulated, listed factory-built chimney length with an inside diameter 2 in. (51 mm) larger than the chimney connector and having 1 in. (25 mm) or more of insulation, serving as a pass-through for a single wall sheet steel chimney connector of minimum 24 gauge [0.024 in. (0.61 mm)] thickness, with a minimum 2-in. (51-mm) air space between the outer wall of chimney section and combustibles. Minimum length of chimney section shall be 12 in. (305 mm). Chimney section concentric with and spaced 1 in. (25.4 mm) away from connector by means of sheet steel support plates on both ends of chimney section. Opening shall be covered, and chimney section supported on both sides with sheet steel supports of minimum 24 gauge [0.024 in. (0.61 mm)] thickness. Supports shall be securely fastened to wall surfaces on all sides and shall be sized to fit and hold chimney section. Fasteners used to secure chimney section shall not penetrate chimney flue liner.	2/51

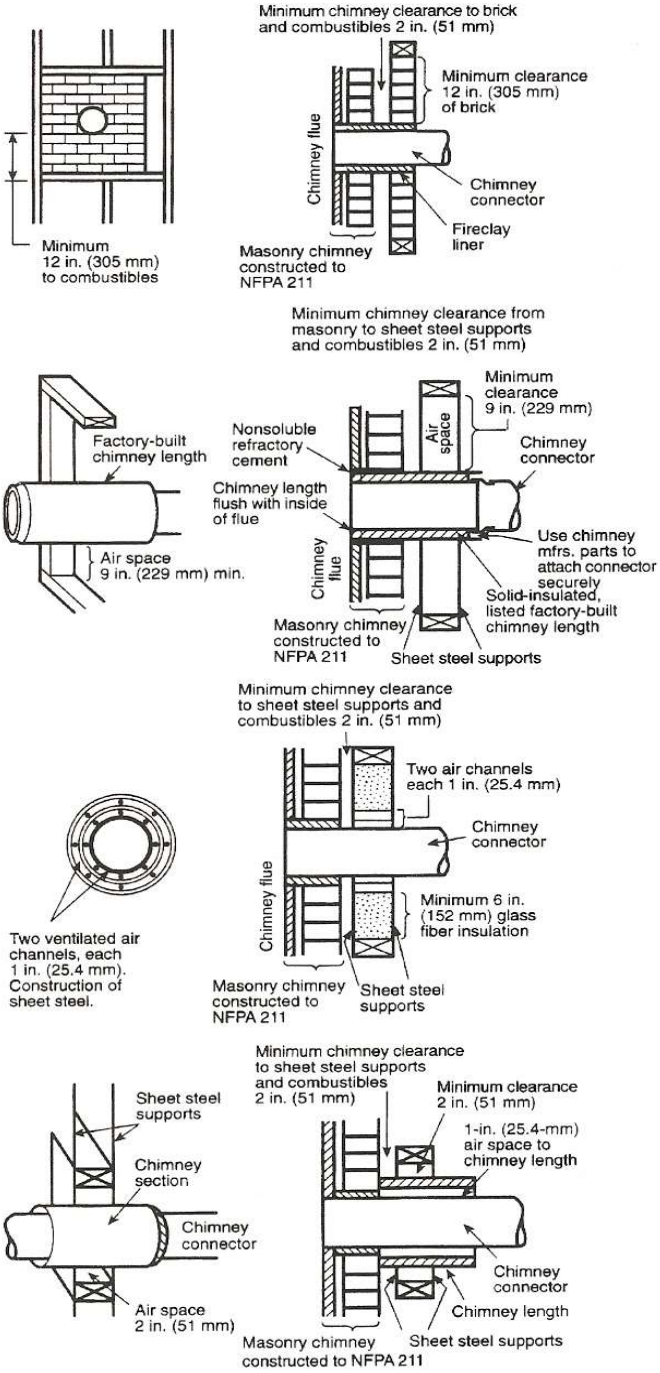

Additional requirements:

1. Insulation material used as part of wall pass-through system shall be of noncombustible material and shall have a thermal conductivity of 1.0 Btu-in./hr-ft^2-°F (4.88 kg-cal/hr-m^2-°C) or less.
2. All clearances and thicknesses are minimums; larger clearances and thicknesses shall be permitted.
3. Any material used to close up an opening for the connector shall be of noncombustible material.
4. A connector to a masonry chimney, except for System B, shall extend in one continuous piece through the wall pass-through system and the chimney wall to the inner face of the flue liner, but not beyond.

Reprinted with permission from NFPA 211-2016, *Standard for Chimneys, Fireplaces, Vents, and Solid Fuel-Burning Appliances*, Copyright © 2015, National Fire Protection Association, Quincy, MA. This reprinted material is not the complete and official position of the NFPA on the referenced subject, which is represented only by the standard in its entirety which may be obtained through the NFPA website at www.nfpa.org.

- It is highly recommended that this insert is installed by a qualified professional certified by the National Fireplace Institute.
- The structural integrity of the floor, walls and ceiling/roof must be maintained.
- NEVER INSTALL AN INSERT IN A SLEEPING ROOM
- This insert is heavy: Get help from another person and use proper lifting techniques

FLOOR PROTECTION REQUIREMENTS

If the bottom of the insert is raised at least 5" from the combustible floor, then a hearth that provides ember protection only (no R-value) is sufficient. If the bottom of the insert is less than 5" from the combustible floor, then Type 2 thermal protection (with an R-value of 1.4) is required.

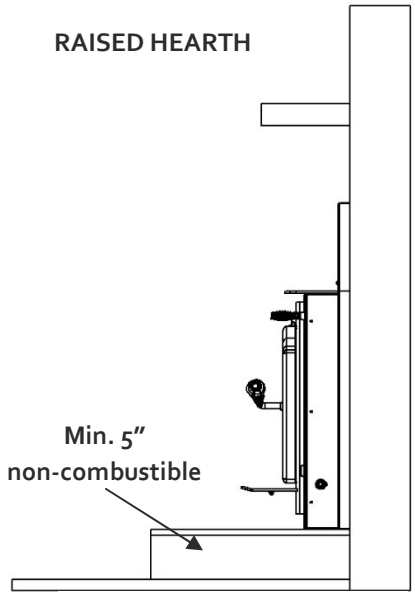

TYPE 1 - Ember protection

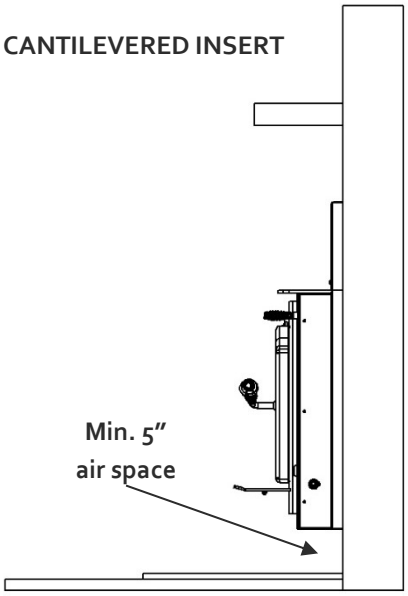

TYPE 1 - Ember protection

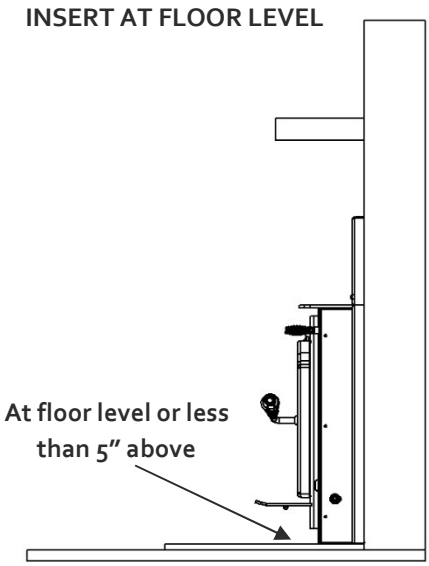

TYPE 2 – 1.4 R-Value

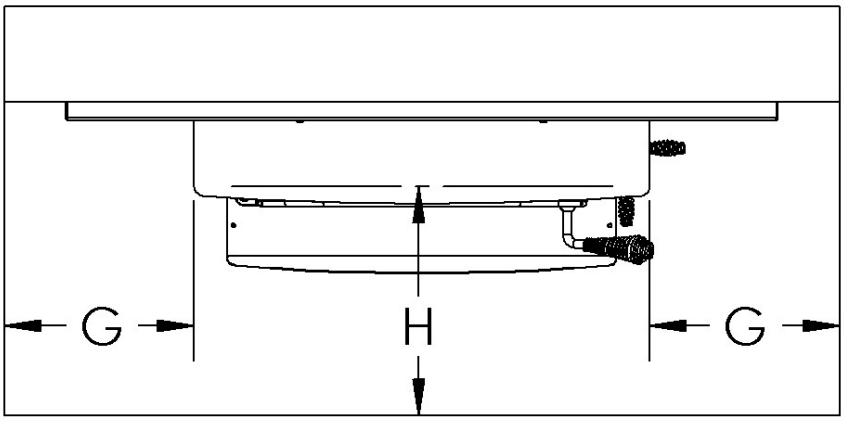

Minimum Hearth Size	
G	6"
H	16"

INSTALLING THE INSERT

Uncrate the insert. Each piece of the insert will be included in a separate box. Follow the instructions located in each box to install the components of the insert. Install the insert in the following order:

1. Install the chimney liner according to the manufacturer's instructions.
2. Carefully place the insert into the fireplace and level.
3. Connect the liner to the insert.
4. Install the fireplace surround (this kit includes hardware for leveling the insert).
5. Install the catalyst and flame diffuser.
6. Install the door.
7. Install the blower (optional)

INTAKE AIR REQUIREMENTS

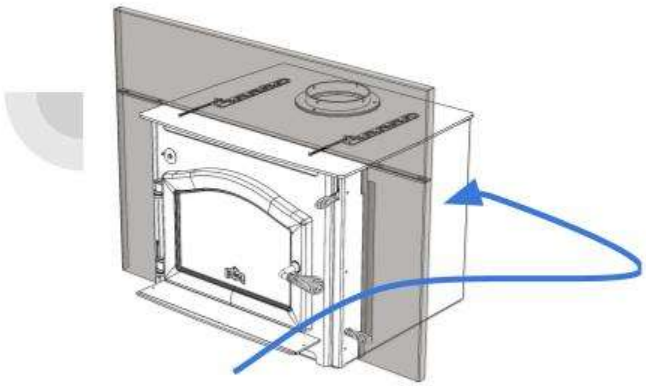

ROOM AIR: Travels through the louvres on the sides of the surround trim and enters a 4" round hole at the back of the insert.

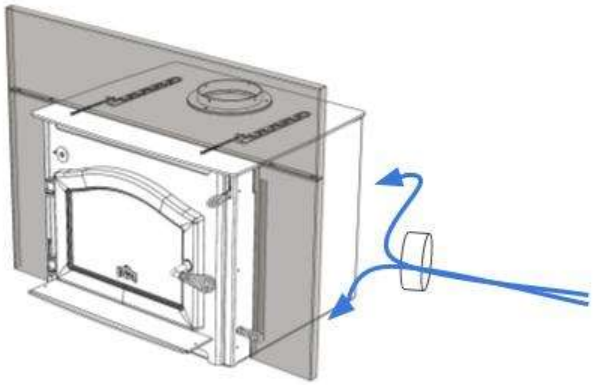

OUTSIDE AIR: Do not modify a fireplace to bring in outside air. If outside air is already supplied to the fireplace then you may seal the room air louvres on the side of the surround trim and make sure that an adequate amount of fresh air can passively enter the 4" round hole at the back of the insert.

FIREPLACE CHIMNEY REQUIREMENTS

A properly installed and maintained venting system is critical to the safe operation of your wood insert. This insert may be connected, with a liner, to a **masonry fireplace** that meets the standards of NFPA 211 or may be connected, with a liner, to a **factory-built fireplace** that meets the standards of UL127. When choosing the location for your insert, decide on a central location in the main living area of the home. Uninhabited areas of the home such as an uninsulated basement or a garage would be an inefficient location for the heater. Also consider not placing the chimney too close to your neighbors or in a valley that would cause a nuisance or unhealthy outdoor air quality. For proper draft, the chimney must exit the roof a minimum of 3 feet and at least 2 feet above any portion of the roof that is within 10 feet of the chimney.

Flue Height Recommendations	
No offsets in the chimney	14 ft
30° or 45° offsets in the chimney	15 ft
90° offsets in the chimney	16 ft.
90° offsets with 2-3 feet of horizontal run	20 ft.
90° offsets into exterior chimney	22 ft.

The standards referenced in this section are easy to find online and the products that meet these standards will be readily available from your dealer. Refer to this glossary of terms for a better understanding of these standards:

Standard	Description
UL 103	Covers the safety requirements for factory-built chimneys that vent wood stoves. Chimney manufacturers can either comply with a 1700° or a 2100° flue-gas temperature test.
UL 103HT	Chimney manufacturers that choose to comply with the 2100° flue-gas temperature test will receive the designation of a 103HT chimney system. HT stands for High Temperature and virtually all modern wood stoves will require this type of chimney.
UL 1777	Covers the safety requirements for chimney liners that are installed into masonry fireplaces. Your chimney liner will meet the safety requirements of UL 1777 only if the installation instructions for the liner are followed.
UL 127	Covers the safety requirements for factory-built fireplaces. Fireplace manufacturers can comply with either a 1700° or a 2100° flue-gas temperature test.
NFPA 211	A publication put out by the National Fire Protection Association that details the proper installation of wood stoves, chimneys, fireplaces, and venting systems.
IRC - Chapter 10	The International Residential Code covers the safety requirements for residential homes. Chapter 10 specifically covers chimneys and fireplaces

WHEN CONNECTING TO A MASONRY FIREPLACE

- This insert must be connected to a code approved (e.g. NFPA 211) masonry fireplace with a 6" flue liner that meets the type HT requirements (2100°) per the UL 1777 standard.

1. Your masonry fireplace and chimney must be built according to an approved method of construction such as the NFPA 211 standard. Visit nfpa.org for free access to the standard.
2. You must install a flue liner that meets the type HT requirements (2100°) per the UL 1777 standard.
3. Have a certified chimney inspector clean and inspect your chimney and fireplace to make sure that there are no code violations, cracks, damaged mortar joints, or blockages.
4. If your chimney is damaged or does not meet code requirements, you may need to re-line or rebuild your chimney.
5. Kuma recommends that an **insulated** chimney liner be installed into a masonry chimney for improved performance.
6. Chimney liners should not be smaller than 6" diameter or the equivalent cross-sectional area of 28 square inches. Any reduction in flue size may result in smoking or poor performance.
7. Maintain all minimum clearance requirements for this insert as shown at the beginning of this section and on the listing tag.

WHEN CONNECTING TO A FACTORY-BUILT FIREPLACE

- The factory-built fireplace must be tested to the UL 127 standard for factory-built fireplaces.
- The fireplace manufacturer must not prohibit the installation of a fireplace insert into the fireplace and the fireplace must be able to support the weight of the insert.
- You must install a liner that meets the Type HT requirements (2100°) per UL 1777.
- The fireplace can not be modified in any way to fit the insert.

1. Lining the Chimney: A stainless steel chimney liner must be securely attached to the insert and to the top of the chimney. The liner must meet the Type HT requirements (2100°) per UL 1777. The original factory-built chimney cap allows for the necessary airflow around the chimney, do not block this airflow. The Dura-Vent brand has developed a kit (6DFPRO-25KFB) specifically for re-lining factory-built fireplaces for use with wood inserts. The proper use of this kit will meet the UL 1777 standard that is required.
2. Alterations: The only alteration to the fireplace that is allowed is the removal of the damper in order to connect the chimney liner to the insert. Any non-functioning decorative items that were removed must be kept so that the fireplace can be returned to its original condition if the insert is ever removed.
3. Permitting: The local building department has the final authority to approve, with a permit, the installation of this appliance into a factory-built fireplace. Do not install without a permit.
4. Repairs: Have a certified chimney inspector clean and inspect your chimney and fireplace to make sure that there are no code violations, damaged components, or blockages.

5. Airflow: Factory built fireplaces have convection louvres, air duct systems and fixed blowers that **cannot be blocked or disabled in any way** (Figure 1).
6. Sealing the damper: You must not allow room air to pass into the chimney of the fireplace. Seal the damper area around the chimney liner (Figure 1).
7. Clearances: Maintain all minimum clearance requirements for this insert as shown at the beginning of this section and on the listing tag.
8. If the insert protrudes from the face of the fireplace, it must be appropriately supported (Figure 1).

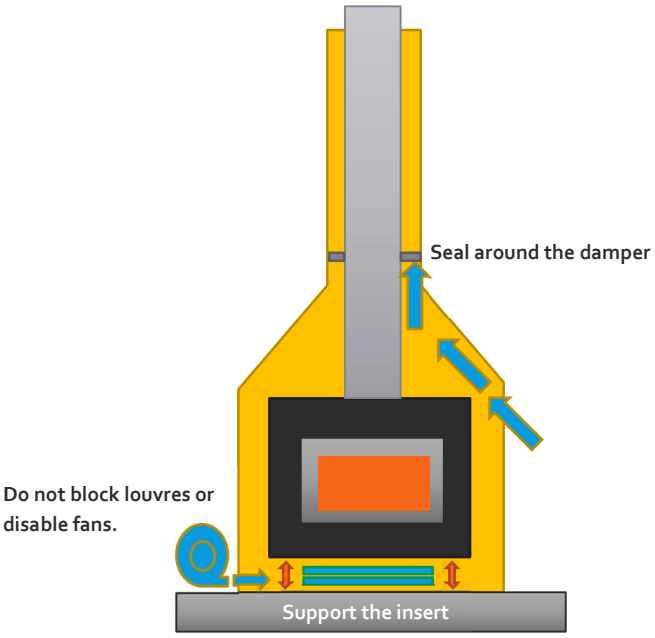

Figure 1

ADDITIONAL REQUIREMENTS FOR MANUFACTURED (MOBILE) HOMES

- In mobile homes, only install into a UL 127 factory-built fireplace that has been approved for use in mobile homes. Do not install into a masonry fireplace in a mobile home. Follow the instructions in the factory-built fireplace section.
- Per UL 127, outside combustion air must be supplied to the draft inlet of the fireplace. This combustion air must be available to the insert.
- Using 8-gauge ground wire and appropriate connectors, you must drill through the hearth and connect the insert to the metal frame underneath the mobile home.
- When required by local code, you will need to fasten the insert to the floor of the mobile home.

SECTION 4 - OPERATING INSTRUCTIONS

- NEVER USE FLAMMABLE LIQUIDS TO START OR FRESHEN UP A FIRE
- CAUTION: Do not use any fuels that are not seasoned natural wood.
- Do not leave the stove unattended with the door open.
- DO NOT OVERFIRE THIS HEATER – Attempts to achieve heat output rates that exceed heater design specifications can result in permanent damage to the heater and to the catalytic combustor.

YOUR 1ST FIRE (BREAK-IN PERIOD)

Paint Curing: When building your 1st fire, be careful to start small and increase the heat slowly over a 4 to 5-hour period. The paint on the stove cures with heat and needs to be done slowly. As the paint cures, it gives off a smell and even sometimes a visible haze into the room. Make sure the area is well ventilated during the curing operation. The smell will subside after a few hours of operation.

Popping and creaking: As the metal heats up and cools down, it moves. This movement can cause a normal popping or creaking sound that will likely decrease after the first several weeks.

Performance: It is normal for the first few fires to seem a bit lazy. As moisture evaporates from the brick, the fire will become more active. A layer of ash in the bottom of the stove will also help to keep your coal bed hot and active. A good thick coal bed and full load of wood are key to optimum performance.

SELECTING WOOD

The leading cause for creosote build-up in the stove or chimney is moisture in the wood. Wood should be protected from rain and seasoned for 1 full year prior to being used. Your wood must have a moisture content of 20% or less. You will need to use a moisture meter to determine the moisture content of the wood. The recommended wood length for this heater is 16". This heater is designed to burn natural wood only. Higher efficiencies and lower emissions generally result when burning air dried seasoned hardwoods, as compared to softwoods or to green or freshly cut hardwoods.

DO NOT BURN:

a. Garbage;
b. Lawn clippings or yard waste;
c. Materials containing rubber, including tires;
d. Materials containing plastic;
e. Waste petroleum products, paints or paint thinners, or asphalt products;
f. Materials containing asbestos;
g. Construction or demolition debris;
h. Railroad ties or pressure-treated wood;
i. Manure or animal remains;
j. Salt water driftwood or other previously salt water saturated materials;
k. Unseasoned wood; or
l. Paper products, cardboard, plywood, or particleboard.

Burning these materials may result in release of toxic fumes or render the heater ineffective and cause smoke. The prohibition against burning these materials does not prohibit the use of fire starters made from paper, cardboard, saw dust, wax and similar substances.

LIGHTING A FIRE

Step 1: Slide the air control out away from the stove until it stops. The air is now fully open for a starting a fire.	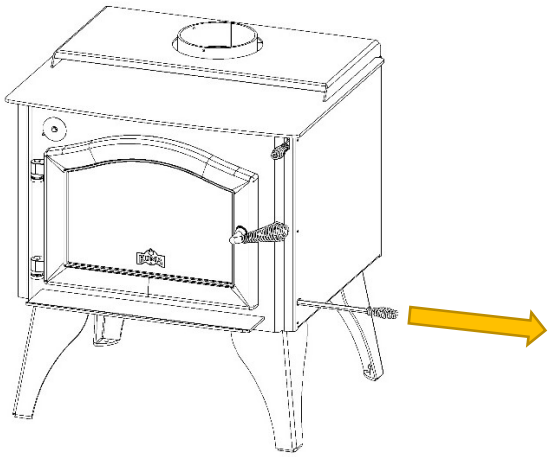
Step 2: Pull the bypass control open: a short pull toward yourself **(about ¾")** and down will open the bypass allowing the chimney to heat quickly. This also prevents smoke from coming into the room when the door is open.	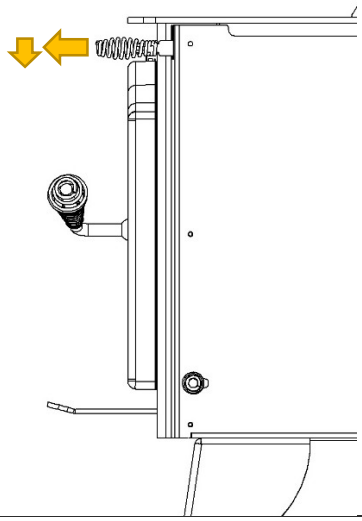
Step 3: Open the door and place kindling, Firestarter, and small pieces of wood in the stove. Do not use a grate or elevate the fire – Build the fire directly on the fire brick. When starting a fire, you should never use un-split pieces of wood unless they are small, such as twigs and branches. Shown to the right is an example of what is called a "top down" fire: Start by loading larger pieces of wood into the firebox bottom then stack progressively smaller pieces so that the kindling pieces are at the top of the stack. You may use a fire starter such as shredded paper on top of the kindling.	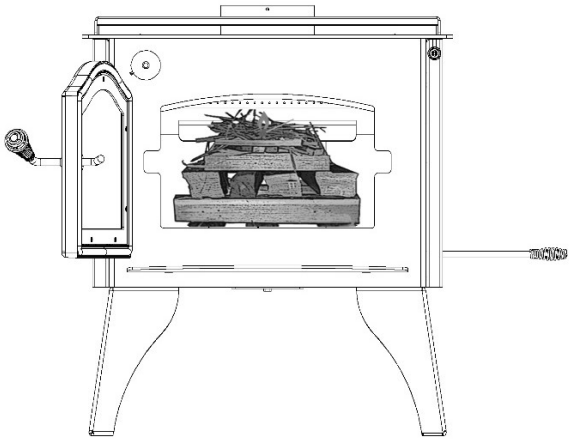

Step 4: Light the Fire, you can optionally leave the door slightly cracked open to aid in the start-up of your stove. Close the door once the fire is well lit. **Do not leave the stove unattended with the door open.**

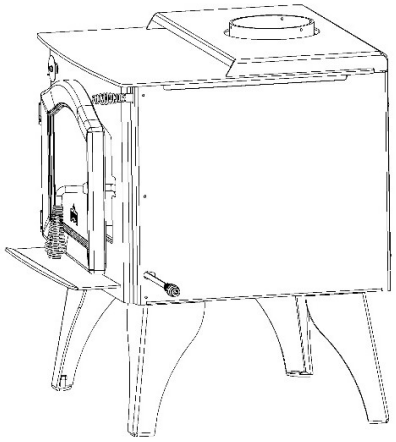

Step 5: After 15 minutes, or once the catalytic thermometer enters the active range, close the bypass control engaging the combustor (Simply lift the bypass control and you will feel it return to the closed position). Leave the air control open for 20-30 minutes so that the fire becomes well established. If you shut the stove down too soon, it may go out or the combustor may stop working.

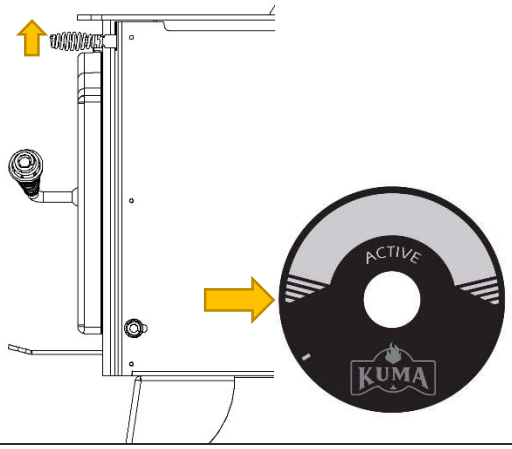

Step 6: After 20-30 minutes, begin to regulate the heat output and burn rate by sliding in the air control. Use the table below to adjust your rate of burn:

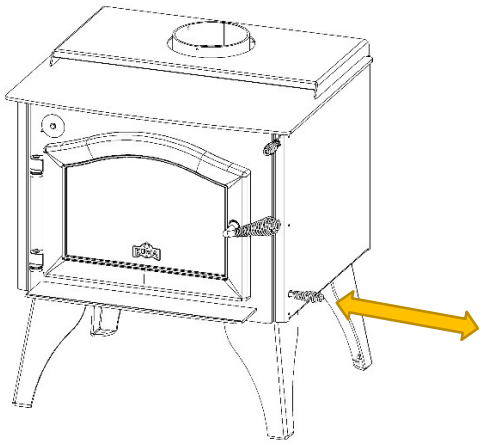

Desired Burn Rate	Position of the air control	Approximate Burn Time
Low Burn	Fully Closed	7-9 hours
Medium Burn	About 1/2" Open	4-6 hours
Start Up or High Burn	Fully Open	2-3 hours

ADDING MORE WOOD TO THE FIRE

1. Slide the air control to fully open and pull open the bypass just as you would do when you are starting a fire (see steps 1 & 2 above). Wait 5 minutes to allow the coals to become active and to allow the smoke to draft up the chimney.
2. Slowly open the wood loading door and rake the coals breaking up any larger pieces. Add wood then shut the door.
3. Once the catalytic thermometer is in the active range AND your wood is well lit, close the bypass control re-engaging the combustor.
4. Leave the air control open for 10-20 minutes so that the fire becomes well established then begin to adjust your rate of burn.

ADDITIONAL TIPS FOR BURNING EFFICIENTLY

Burning wood produces both visible emissions (e.g. particulate matter or smoke) as well as invisible emissions (e.g. Carbon Monoxide). When operating your stove, periodically check for visible emissions coming from the chimney and adjust the burn rate and fuel load to reduce emissions. Remember to let your stove burn open for 20-30 minutes each time you reload it with wood. Shutting the air control prematurely can cause excessive creosote in the chimney. This wood heater has a manufacturer-set minimum low burn rate that must not be altered. It is against federal regulations to alter this setting or otherwise operate this wood heater in a manner inconsistent with operating instructions in this manual. Small hot fires produce less creosote than long, low smoldering fires. When you start your stove or reload your stove with more wood, open the draft fully and burn the stove at high burn for 10-30 minutes to heat up the chimney and secondary burn system. This ensures that when the draft control is pushed in for a lower, longer burn, the stove will burn cleaner.

UNDERSTANDING DRAFT

Wood stoves depend on the draft of the chimney to operate properly. Draft is the force which moves exhaust from the appliance up through the chimney. A properly drafting chimney will pull the correct amount of air into the stove and will provide you with excellent performance and heat output.

Too little draft may cause back puffing of smoke into the room and creosote formation in the chimney. Inadequate draft can cause the appliance to leak smoke and carbon monoxide into the room through appliance and chimney connector joints. **Factors that reduce draft are:**

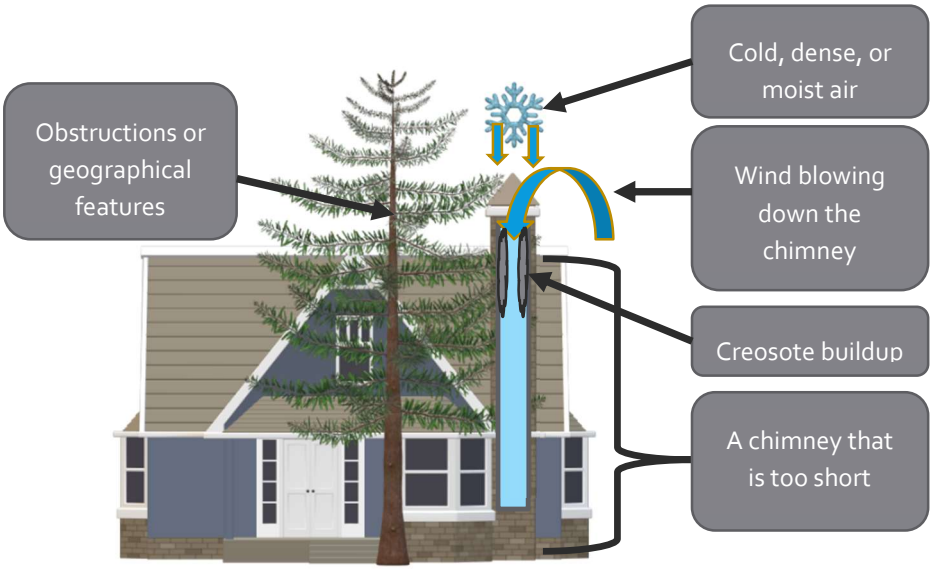

Too much draft may cause excessive temperatures inside the firebox and may damage the internal components of the stove. An uncontrollable burn or excessive temperature indicates excessive draft. **Factors that increase draft are:**

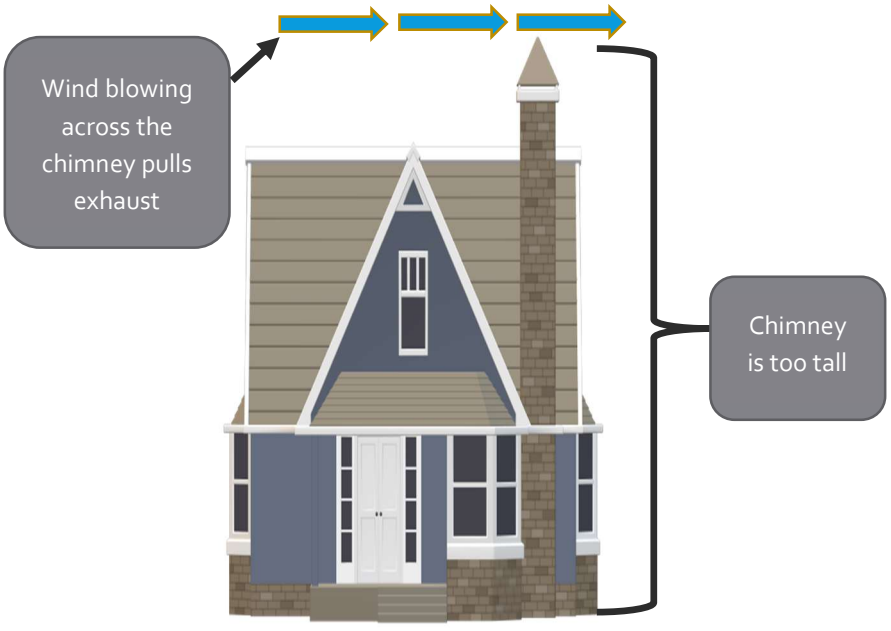

BEYOND THE BASICS - DETAILED INFORMATION ABOUT YOUR NEW WOOD STOVE

You learned above, the simple process of starting and reloading your stove. This section provides a more in-depth look at what is going on inside your stove as you operate it. This stove's design combines a thermal secondary burn system (burn tubes) with a catalytic combustion system to create an easy to use, ultra-low emission hybrid appliance. Read about each feature below to help you operate your stove efficiently and beautifully. You can see both systems illustrated in the cut-away drawing below:

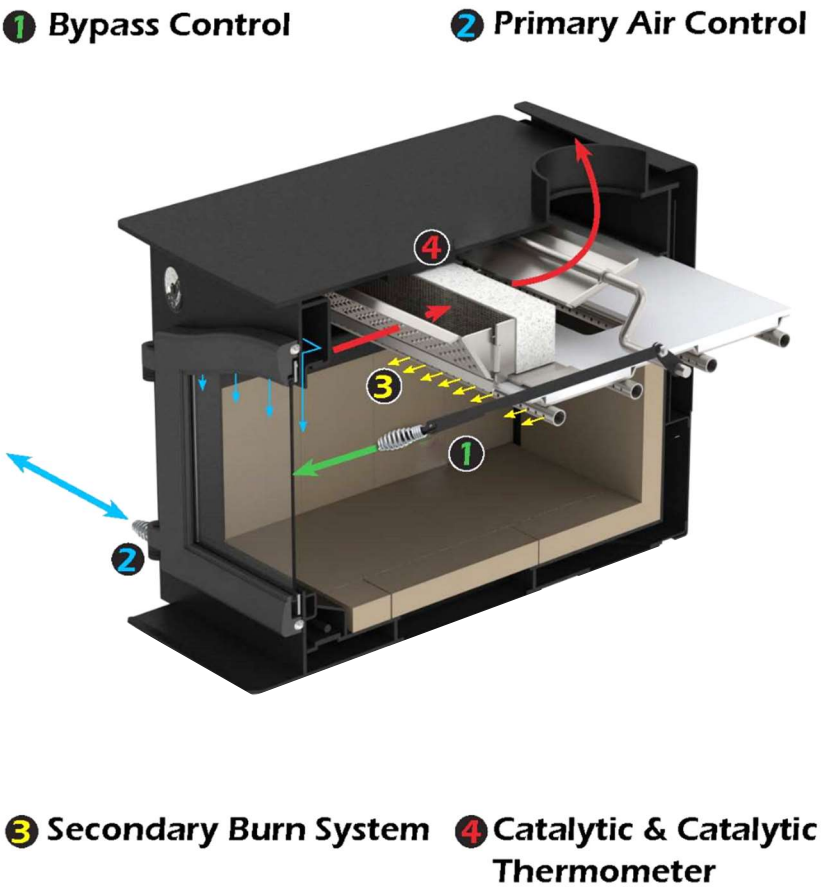

1. **Bypass Control** – Located on the upper right side of the stove, the bypass control allows smoke and heat to temporarily bypass the hybrid burn system. This helps to quickly heat the chimney and prevent smoke from coming into the room when the door is open.

   Start/Reload Position – This position helps to quickly heat the chimney and the catalyst during start-up by allowing some heat to bypass the catalyst. This position also allows you to reload the stove while preventing smoke from coming into the room. A short pull forward **(about ¾")** and down will engage the bypass in the Start/Reload Position.

   Run Position – This is the normal operating position for the stove. Your stove should always be in this position unless you are starting or reloading the stove. Simply lift the bypass control and you will feel it return to the run position.

2. **Primary Air Control** – Located on the lower right side of the stove, this control changes the rate of burn for the stove. Slide out for high heat output and slide in for low heat output. You can operate the stove at any burn rate in between high and low.

    a. Always set the air control to high for 20 to 30 minutes when starting or after refueling your stove. This allows the stove and chimney to come up to operating temperature.

    b. When set to high, the primary air washes the glass as it feeds the fire to help keep it clean. If your glass has built up any smoke deposits from slow burning, set the air control to high for 20 to 30 minutes.

    c. Never over fire the stove by leaving the air control on high for too long (see Catalytic and Catalytic Thermometer below).

3. **Secondary Burn System** – There are no controls for this system. The stove will automatically draw air into the secondary burn tubes to re-burn smoke before it reaches the catalyst.

4. **Catalytic & Catalytic Thermometer** – The catalytic is a metal honeycomb shaped device that cleans up most of the remaining smoke before it travels up the chimney. The catalytic thermometer shows you the correct temperature to operate the stove at.

    a. Always operate the stove in the active range (anywhere in the light grey area is perfectly normal).



    b. **<u>If the probe travels above the active range:</u>** You are exceeding the recommended operating temperature of the catalyst (1300°F). It is fine to go above the recommended operating range for short periods of time.

    c. Use the Primary Air Control to change the temperature of the stove.

    d. **If the probe travels below the active range:** Your stove is becoming too cool to operate efficiently: reload your stove before the catalytic combustor becomes inactive.

SECTION 5 - CATALYST INFORMATION

TAMPER WARNING

This wood heater contains a catalytic combustor which needs periodic inspection and replacement for proper operation. It is against federal regulations to operate this wood stove in a manner inconsistent with the operating instructions in this manual, or if the catalytic element is deactivated or removed.

CATALYST TYPE

The combustor supplied with this wood stove is an Applied Catalysts ACI-5M combustor. Please refer to section 6 for catalyst maintenance. Refer to section 7 for catalyst troubleshooting. Refer to section 8 for catalyst warranty information.

CATALYST MONITORING

It is important to periodically monitor the operation of the catalytic combustor to ensure that it is functioning properly and to determine when it needs to be replaced. A non-functioning combustor will result in a loss of heating efficiency, and an increase in creosote and emissions. Following is a list of items that should be checked on a periodic basis:

1. Combustors should be visually inspected at least three times during the heating season to determine if physical degradation has occurred. Actual removal of the combustor is not recommended unless more detailed inspection is warranted because of decreased performance. If any of these conditions exists, refer to Catalyst Troubleshooting section of this owner's manual.
2. This hybrid heater is equipped with a temperature probe to monitor catalyst operation. Properly functioning combustors typically maintain temperatures in excess of 500°F, and often reach temperatures in excess of 1,000°F. If catalyst temperatures are not in excess of 500°F, refer to the Catalyst Troubleshooting section of this owner's manual.
3. You can get an indication of whether the catalyst is working by comparing the amount of smoke leaving the chimney when the smoke is going through the combustor and catalyst light-off has been achieved, to the amount of smoke leaving the chimney when the smoke is not routed through the combustor (bypass mode).
    - Step 1—Light stove in accordance with instructions in section 4.
    - Step 2—With smoke routed through the catalyst, go outside and observe the emissions leaving the chimney.
    - Step 3—Open the bypass mechanism and again observe the emissions leaving the chimney.
    - Significantly more smoke will be seen when the exhaust is not routed through the combustor (bypass mode).

READING THE CATALYST PROBE

Follow the instructions in section 4 to build and maintain a fire. During normal operation the probe should read in the active range. If, during normal operation, the probe reads less than the active range, the stove should be refueled following the instruction in section 4. If the probe is climbing above the active range, you need to decrease the primary air control so that you do not over-fire the stove or catalyst.

This wood heater needs periodic inspection and repair for proper operation.

FIRE EXTINGUISHER

Every home should have a type A:B:C fire extinguisher that is checked and maintained on a regular basis. The National Fire Protection Agency (nfpa.org) recommends having an extinguisher on each floor of your home. The location of the extinguisher should be known to everyone in the house.

ASH DISPOSAL

Empty the ashes when they get 3" to 4" deep. Make sure that the fire is out - Never try to empty the ashes when the stove has an active or full fire, doing so will over heat the stove. Always wear gloves while handling hot ashes. The ashes may be removed by pulling out the ash drawer (if equipped on freestanding models) or scooping out the loading door of the stove. To operate the ash drawer:

1. Turn the ash drawer handle to the left or right to release the latch
2. Pull out the drawer and empty the ashes safely as described below.
3. Clean out any ashes that may have fallen into the cavity that the ash drawer slides in to**. If any ashes remain in the cavity it can prevent the ash pan from sealing, resulting in excessive air to the fire.**
4. Slide the ash drawer back into place, push in to compress the spring and turn the handle down.
5. **NEVER OPERATE THE STOVE WITH THE ASH DRAWER REMOVED OR OPENED.**

Leave 1" of ash in the bottom of the stove to help maintain a hot charcoal bed. Dump the ashes into a metal container with a tight-fitting lid and keep away from the house. **NEVER EMPTY ASHES INTO A COMBUSTIBLE CONTAINER SUCH AS A PLASTIC BUCKET OR PAPER BAG. NEVER LEAVE ASHES NEAR THE HOUSE OR GARAGE.**

CHIMNEY INSPECTION AND CLEANING

When wood is burned slowly, it produces tar and other organic vapors, which combine with expelled moisture to form creosote. The creosote vapors condense in the relatively cool chimney flue of a slow-burning fire. As a result, creosote residue accumulates on the flue lining. When ignited, this creosote makes an extremely hot fire. The chimney connector and chimney should be inspected at least once every two months during the heating season to determine if a creosote buildup has occurred. If creosote has accumulated, it should be removed to reduce the risk of a chimney fire. Failure to remove creosote can result in a chimney fire which can damage both the chimney and the stove. We recommend having the chimney cleaned and inspected by a licensed, professional chimney sweep. If the chimney is damaged, it must be replaced.

GASKET INSPECTION AND REPLACEMENT

Inspect the gaskets around the door, glass and ash pan (if equipped) at least once a year. Check for areas that are frayed or missing. Press the gasket with your finger to see if the gasket is somewhat soft. Gaskets that are hard will not conform to the stove and may leak air. When the stove is cold, check to see if the glass moves up and down or left to right. If the glass moves, you may need to tighten the screws around the

retaining ring or replace the gasket. Replacement gaskets and service are available through your local dealer or by visiting kumastoves.com.

GLASS CLEANING AND REPLACEMENT

Never clean the glass when it is hot. Your stove is equipped with an air wash system that will self-clean. Burn the stove on high for 20 to 30 minutes every time you add fuel to the fire. This will reduce the creosote on the glass. If needed, clean the glass with a soft cloth and stove glass cleaner. Do not use steel wool, sandpaper or abrasive cleaners. If you close the door on a piece of wood that is too long, you will break the glass. If the glass breaks in your stove, shut off the primary air control and let the fire burn out. Do not leave the stove unattended with a broken glass. To replace broken glass:

1. Carefully lift the door from the stove and place it on a clean soft work area.
2. Using a Phillips screw driver, remove the retaining ring screws and the retaining ring.
3. Carefully discard the broken glass. CAUTION: BROKEN GLASS WILL BE SHARP.
4. Clean the door and set the new piece of glass into the door so that the logo reads correctly from the front side of the door. Kuma replacement glass will have the gasket pre-installed.
5. Replace the retaining ring and screws. Be careful to tighten the screws evenly and tighten just enough to hold the glass firmly

SECONDARY BURN TUBE REPLACEMENT

The burn tubes are one of two burn systems that causes your stove to operate efficiently, this stove also uses a catalyst to clean some of the remaining smoke before it leaves the stove. If your burn tubes are not physically degraded (falling apart, crushed or excessively warped) then they are functioning and will not need replacement. To remove a burn tube, un-bolt the tube using a 7/16" wrench. Pull the tube to the right then down and out of the stove. Replace the tube and re-install the bolt the holds the tube in place.

CATALYST INSPECTION, CLEANING AND REPLACEMENT

The catalyst is one of two burn systems that causes your stove to operate efficiently, this stove also uses secondary burn tubes to re-burn smoke before it reaches the catalyst. To inspect your catalyst, unhook the flame deflector from the face of the baffle by pulling it forward. If your catalyst has not physically degraded (falling apart, crushed or excessively warped) then it is likely functioning and will not need replacement. If your Catalytic combustor becomes plugged with ash, clean the catalyst **in place** using a soft brush or for deeper cleaning use a slight to moderate (~20-30 psi.) amount of air pressure blowing any ash through the cells of the catalyst. To replace the catalyst:

1. Remove the flame guard from the face of the baffle by pulling forward. Set aside.
2. Pull the catalyst out using the 2 handles on the front of the catalyst. You may need to wiggle the catalyst to loosen the gasket material.
3. Remove any gasket material that was left in the baffle cavity.
4. Your new catalyst will be wrapped in a gasket material that is held in place with masking tape and a stretch film. There is no need to remove the tape or the stretch film.
5. Slide the new catalyst into the cavity until it stops. If you see any gaps larger than 1/8" around the sides or top of the catalyst you will need to slide the catalyst out and wrap those areas with additional

gasket material (you can use masking tape to hold it in place). The gasket provided will expand 2-3 times its original thickness once heated to seal gaps.

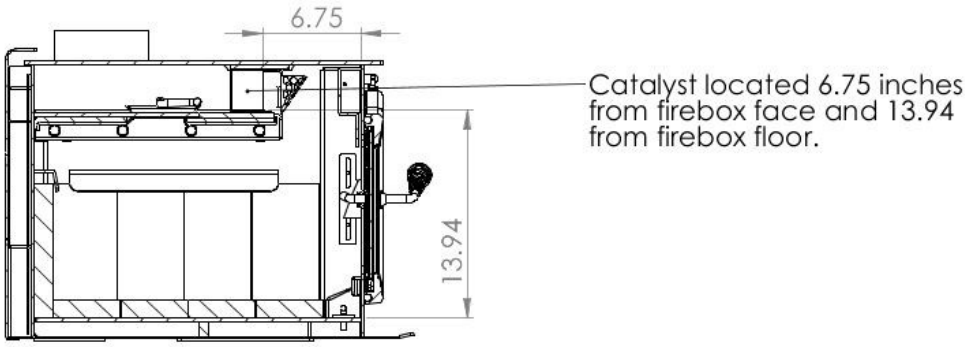

BRICK AND CERAMIC INSULATION REPLACEMENT

Bricks and ceramic insulation should be inspected annually and replaced if necessary. Cracked bricks are fine if they remain in place. Bricks that are crumbling or falling out need to be replaced. The ceramic insulation is located on the top of the stove's baffle and is designed to keep heat in the stove and increase efficiency. If the insulation is in place it can be left alone. If the insulation becomes torn during cleaning, simply lay it back together tightly in that area. If the insulation tears to multiple pieces, it should be replaced. To replace the ceramic insulation, remove the 3 burn tubes allowing the entire baffle to come down and out of the stove. Mark or otherwise note the order of the tubes so they can be replaced in the same location. Place the insulation blanket on top of the baffle so that the cut-out aligns with the bypass opening in the baffle. Re-install the baffle and the 4 burn tubes.

MAINTENANCE DIAGRAMS & PARTS LIST

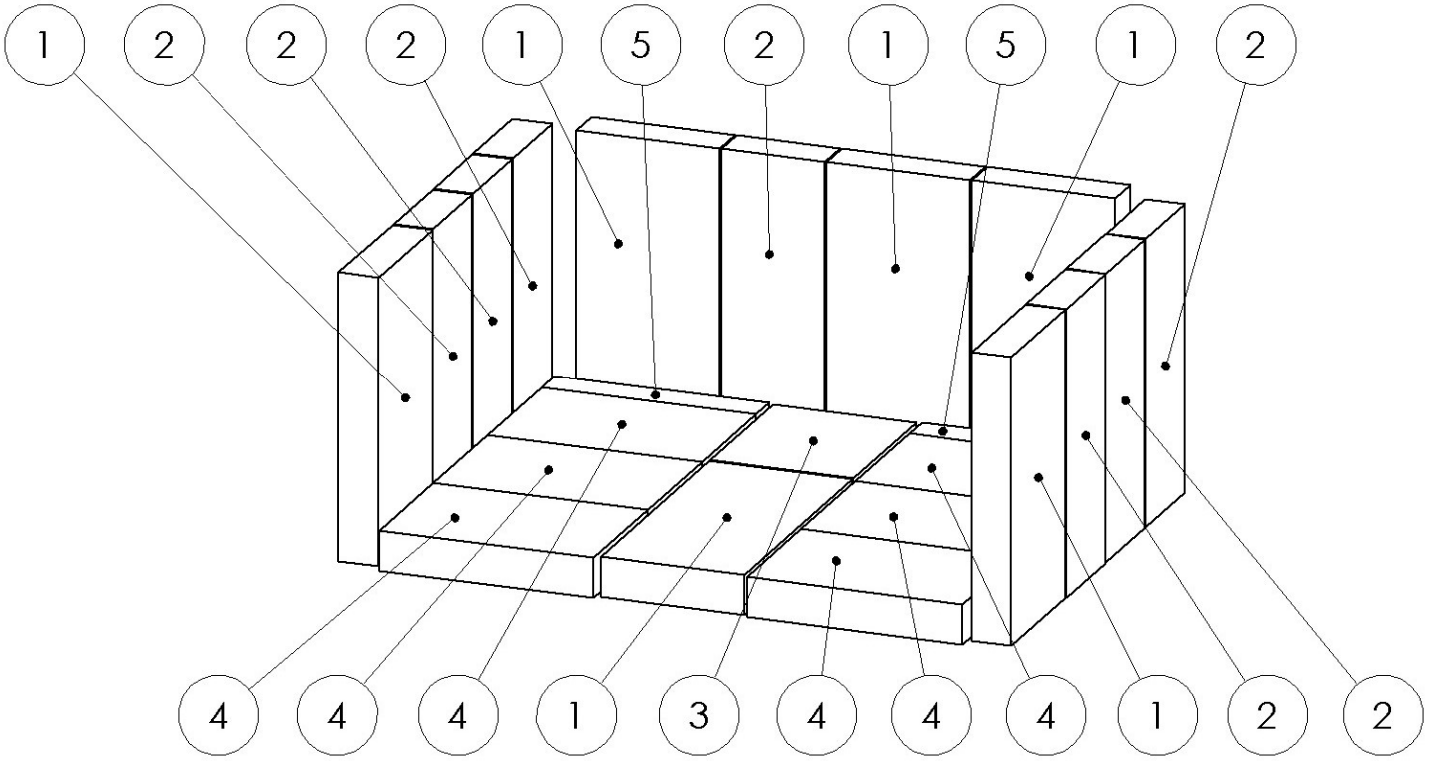

ID	Item #	Description
1	KR-BR-01	Brick, standard size. 9" x 4-1/2".
2	KR-BR-183	Brick, cut size. 9" x 3-1/2"
3	KR-BR-182	Brick, cut size. 5" x 4-1/2"
4	KR-BR-183	Brick, cut size. 7" x 4-1/2"
5	KR-BR-184	Brick, cut size. 7" x 1"

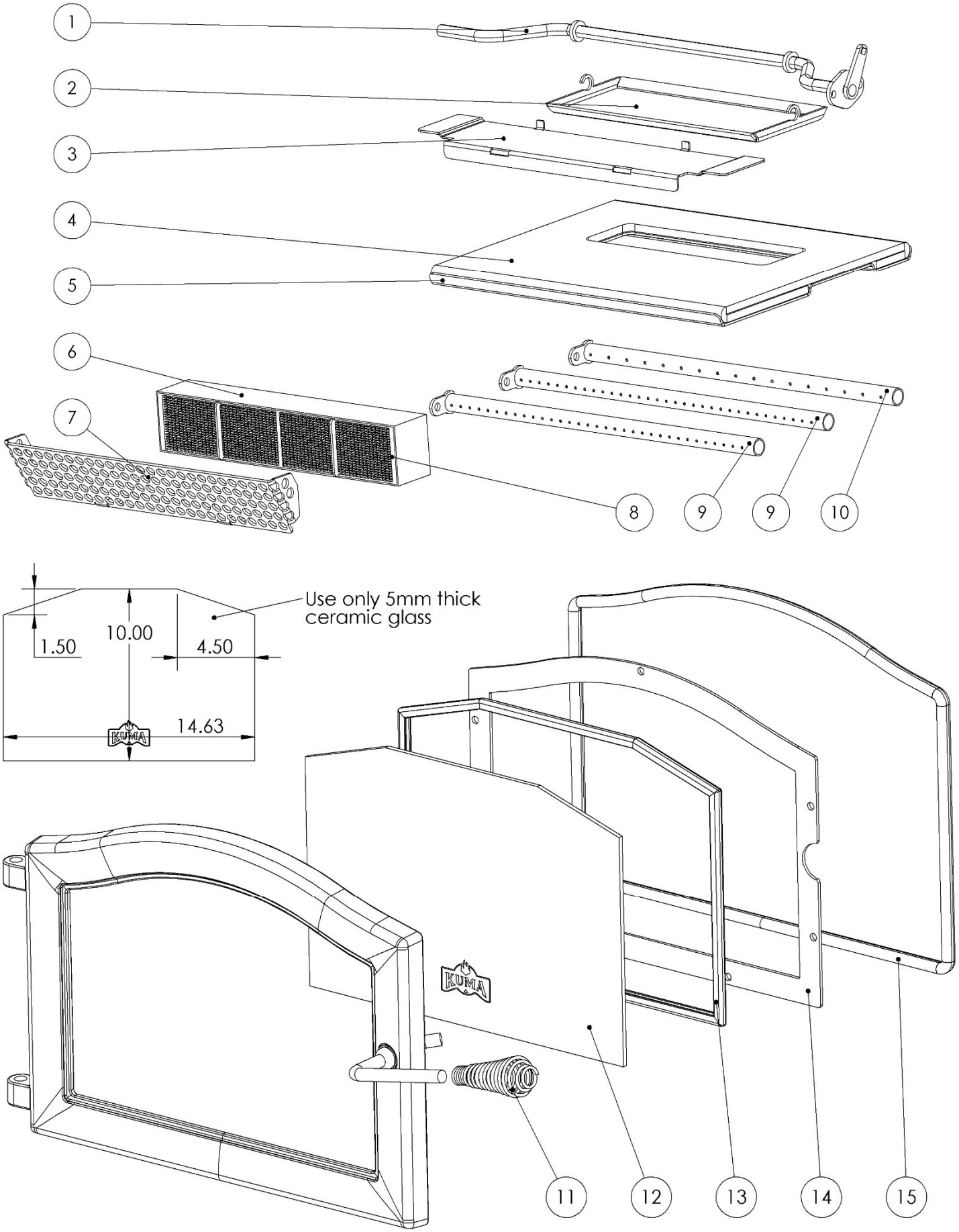
1
2
3
4
5
6
7
8
9
9
10
1.50
10.00
4.50
14.63
Use only 5mm thick
ceramic glass
11
12
13
14
15

ID	Item #	Description
1	KR-BH-18	Bypass hinge assembly, stainless steel. Fits: ASP/TAM/ABR/ALP.
2	KR-BP-01	Bypass plate, stainless steel. Fits: All models.
3	KR-CS-01	Catalytic support tray, stainless steel. Fits: All models.
4	KR-IN-18	Ceramic baffle insulation set. Fits: ASP/TAM/ABR/ALP.
5	KR-BF-18	Baffle plate, stainless steel. Includes Insulation blanket (KR-IN-18) Fits: ASP/TAM/ABR/ALP.
6	KR-GK-01	Catalytic gasket, expanding. Fits: All models with catalytic KR-CT-01.
7	KR-FG-01	Catalytic flame guard, stainless steel. Fits: All models.
8	KR-CT-01	Catalytic combustor, metal alloy. Includes Gasket (KR-GK-01)Fits: All models.
9	KR-BT-181	Baffle burn tube, front or middle. Fits: ASP/TAM/ABR/ALP.
10	KR-BT-182	Baffle burn tube, rear. Fits: ASP/TAM/ABR/ALP.
11	KR-SP-02G	Door handle, gold. Fits: All KA-DR-25 and KA-DR-18 doors.
11	KR-SP-02P	Door handle, pewter. Fits: All KA-DR-25 and KA-DR-18 doors.
12	KR-GL-18	Door glass, includes gasket. Fits: All KA-DR-18 doors.
13	KR-GK-034	Gasket, 3/4" fiberglass channel, 5 feet. Fits: All glass sizes.
14	KR-GR-18	Glass retainer. Fits: All KA-DR-18 doors.
15	KR-GK-058	Gasket, 5/8" fiberglass, 8 feet. Fits: All doors and ash pans.
n/a	KR-SP-01P	Control handle, pewter. Fits: All models.
n/a	KR-SP-01G	Control handle, gold. Fits: All models.
n/a	KR-AH-01	Gasket adhesive, fiberglass to metal. Fits: All doors and ash pans.
n/a	KA-BL-05	Variable speed blower, 125 CFM. Fits Aspen, Tamarack, Aberdeen.
n/a	KA-BL-03	Variable speed blower with thermostat, 70 CFM. Fits Alpine

Parts and support are available from your local dealer, by contacting Kuma Stoves at 888-714-5294 or visiting kumastoves.com and clicking on the support tab.

SECTION 7 - TROUBLESHOOTING

STOVE BURNS LAZY AT START UP.

1. The chimney is still cool, allow more time to warm up.
2. Wood is not seasoned (still green). Wood should sit for about 1 year, split and loosely stacked if it was cut green.
3. Wood is well seasoned but has a lot of surface moisture. Your wood supply must be covered. Check your tarps or other covering to see that no rain or snow is getting to your wood. Wood should be covered on top, but open on the sides to allow air movement to aid in drying.
4. Stove is being shut down too soon. Leave the air open for longer. (do not leave the stove unattended with door open) See Section 4 for lighting instructions.

STOVE BACK-PUFFS OR SMOKES INTO THE ROOM AT START UP.

1. Make sure the bypass rod is pulled open
2. Chimney is cold. Cold chimneys can produce a "reverse draft" where cold air is rushing down the chimney into the stove. Open a door or a window for about 5 minutes to equalize pressure in the house then try restarting with small strips of newspaper. Using small strips of newspaper or an approved fast burning fire starter and small pieces of kindling will create heat faster to help reverse the cold air.
3. Chimney and/or the chimney cap needs to be cleaned. Your chimney should be checked and cleaned if necessary, every few months. Even a small amount of buildup can cause a draft restriction, for example: ¼ inch of buildup on the side wall of an 8" chimney reduces the effective area of the chimney by about 20%. Pay close attention to the chimney cap, especially if it has a screen. Screened chimney caps can become blocked enough to restrict flow in just a few weeks.

STOVE SMOKES OUT THE DOOR WHEN IT IS OPEN.

1. The door was opened before the bypass rod was pulled open. Open the bypass for 1 minute before opening the door.
2. The door was opened too quickly. Crack the door open just a small amount and let the stove "breathe" a few seconds before slowly opening all the way.
3. Chimney and/or the chimney cap needs to be cleaned. Your chimney should be checked and cleaned if necessary, every few months. Even a small amount of buildup can cause a draft restriction, for example: ¼ inch of buildup on the side wall of a 6" chimney reduces the effective area of the chimney by about 20%. Pay close attention to the chimney cap, especially if it has a screen. Screened chimney caps can become blocked enough to restrict flow in just a few weeks.

STOVE WON'T SHUT DOWN.

1. Check the main door gasket and glass gasket for proper seal. See section 6 for instructions on checking your gaskets.
2. Chimney is too tall, see Section 3 for flue height recommendations.

STOVE WON'T BURN HOT ENOUGH. LAZY BURN.

1. Wood is not seasoned (still green). Wood should sit for about 1 year, split and loosely stacked if it was cut green.
2. Wood is well seasoned but has a lot of surface moisture. Your wood supply must be covered. Check your tarps or other covering to see that no rain or snow is getting to your wood. Wood should be covered on top, but open on the sides to allow air movement to aid in drying.

3. Chimney and/or the chimney cap needs to be cleaned. Your chimney should be checked and cleaned if necessary, every few months. Even a small amount of buildup can cause a draft restriction, for example: ¼ inch of buildup on the side wall of an 8" chimney reduces the effective area of the chimney by about 20%. Pay close attention to the chimney cap, especially if it has a screen. Screened chimney caps can become blocked enough to restrict flow in just a few weeks.
4. Catalytic combustor is plugged with ash. Clean the catalyst in place using a slight to moderate (~20-30 psi.) amount of air pressure blown through the baffle grid removing ash from the catalyst cells.
5. Atmospheric conditions. Occasionally, barometric episodes occur that affect draft, thereby affecting stove performance. If your stove has been working fine and performance drops suddenly, this is most likely the cause, and will usually go away within a few days.
6. Your fuel load may be too small or the wood size too large for the coal bed. A small bed of coals requires re-kindling to build up the heat, only put large chunks of wood on a very hot and active bed of coals.

BURN TIME TOO SHORT.

1. Your fuel load may be too small or the wood size too large for the coal bed. A small bed of coals requires re-kindling to build up the heat, only put large chunks of wood on a very hot and active bed of coals. If there are large chunks of charred wood left after the fire has gone out, the coal bed was not hot enough.
2. Fuel quality. Harder, denser woods produce longer burn times. Likewise, softer woods produce shorter burn times.
3. Check the main door gasket and glass gasket for proper seal. See for instructions on checking your gaskets.

CATALYST TROUBLESHOOTING.

Problem	Cause	Solution
Catalyst plugged with creosote	Burning wet wood or pushing in the bypass rod too soon.	Burn only dry, seasoned natural wood. Burn a hot fire to burn off the creosote buildup then brush off the face of the catalyst with a soft bristle brush.
Catalyst masked with soot or fly ash.	Pushing in the bypass rod too soon. Burning improper material such as cardboard, coal or wrapping paper.	Remove the flame guard but leave the catalyst in place. Brush off the face of the catalyst with a soft bristle brush or gently blow out the cells with a can of dusting air. Burn only dry seasoned natural wood.
Lower Efficiency	Flames contacting the catalyst from excessive draft can reduce the effectiveness of the catalyst.	Use less wood or lower the air to the stove. Install a damper to reduce draft. Do not burn material that will poison the catalyst such as colored paper, cardboard, paneling, painted or treated wood.
Catalyst is plugged with fly ash	Pushing in the bypass rod too soon. Burning material that produces fly ash and char. See section 4 for a list of improper materials	Make sure you achieve catalyst light off (see section 4) Remove the flame guard but leave the catalyst in place. Gently blow out the cells with a can of dusting air. Burn only dry, seasoned natural wood.

SECTION 8 — LIMITED WARRANTY

Our Promise:

If any maintenance items wear out in the first three years, we will supply you with the parts to fix it. For as long as you own your stove, if you ever have a defect in the material or workmanship of your stove's firebox, we will repair or replace it for you. See full details below:

Items Covered	Parts Coverage Period	Labor Coverage Period
Maintenance Items: Bricks, gasket, ceramic insulation, and paint.	3 Years	No Labor Coverage
Blowers, brick supports. All removable wear items including the ash grate, baffle plate, bypass mechanism, catalytic support tray, and catalytic flame guard.	5 Years	3 Years
Stove firebox, burn tubes, legs, glass (thermal breakage) and door casting.	Forever	3 Years

Catalyst Warranty: The combustor supplied with this heater is an Applied Catalysts ACI-5M, Long Life Combustor. Kuma part# KR-CT-01 Following is the catalytic combustor warranty supplied with this wood heater. Catalyst warranty claims should be addressed to: Kuma Stoves 50145 N. Old Highway 95 Rathdrum ID, 83858. Ph. 888-714-5294.

6-year structural warranty: Warranty claim must meet the following conditions: 1. warranty has been registered proving the date of purchase and that you are the original owner. 2. You return the catalyst to Kuma stoves: No advanced exchange is available under this warranty. 3. The catalyst has not been abused by over-firing or using unauthorized fuels. If the catalyst loses its structural integrity due to a manufacturing defect, Kuma stoves will replace the catalyst at no charge. The replacement catalyst will have a 90-day warranty coverage.

12-year performance warranty: A replacement catalyst is available for purchase from Kuma Stoves at a 50% discount from MSRP. The only condition of this pro-rated performance warranty is that your warranty has been registered proving the date of purchase and that you are the original owner. The catalyst does not need to be returned.

Warranty Coverage:

To ensure warranty coverage, it is very important that you register your Kuma Stove warranty within 30 days of purchase at kumastoves.com or fill out and return the warranty registration in your owner's packet. Operation of this stove in a manner inconsistent with the owner's manual, especially the burning of materials for which this unit is not certified by the EPA, will void the warranty. This warranty covers your new Kuma Stove from defects in material and workmanship for the period outlined in this warranty. Kuma Stoves reserves the right to replace, repair or authorize repair of any defective part at its sole discretion. This warranty is not transferrable and covers the original owner of the product from the time of purchase. All parts that have been replaced under this warranty will have a 90-day warranty coverage. The maximum value of this warranty is the original purchase price of the product. This warranty is subject to the conditions and limitations outlined below. This warranty covers stoves purchased from an authorized Kuma Stoves dealer.

Warranty Instructions:

Please contact the dealer where you purchased your stove. You may also contact Kuma stoves directly at 50145 N. Old Highway 95, Rathdrum ID 83858 or by phone at 1-888-714-5294 or contact us online at kumastoves.com. When calling, you will need to have your proof of purchase, the model name, and the serial number of your stove. When calling please remember that shipping and handling costs are not covered under this warranty.

Warranty Exclusions:

This Warranty does not cover: 1. Changes in the color of the surface of the stove as this naturally happens during the firing of the stove and is considered normal. 2. Damage to plating due to chemical cleaners, fingerprints, or scratching. 3. Shattered glass caused from wood impact. 4. Discoloration of plating or glass. 5. Expansion and contraction of the firebox causing noise. 6. Damage caused from: power surges, unauthorized modifications, using incorrect fuel and/or accelerants, shipping/handling, failure to follow the manufacturer's installation instructions, failure to follow any local building codes. 7. Damages to any product not manufactured by Kuma Stoves. 8. Any stoves ability to heat a specific area. Heating capacity is given as a guideline and is not guaranteed. 9. Shipping costs or travel time. Please talk with an authorized dealer or Kuma representative about the potential charges for travel or shipping. 10. This warranty is void in the case of abuse, over firing, unauthorized repair, alterations, improper installation and/or service.

Appendix A

FIREBOX VOLUME

Usable Firebox Volume: 1.731 cu ft

18.25 W x 17.25 D x 9.5 H = 2991 cu in = 1.731 cu ft

See page 271 for dimensional drawings.

Overall Firebox Volume: 1.821 cu ft

18.25 x 17.25 x 9.5= 2991 cu in = 1.731 cu ft

18.25 x 0.75 x 4.75 = 65 cu in = 0.04 cu ft

18.25 x 0.75 x 6 = 82 cu in = 0.05 cu ft

Not Calculated. Less than 4” horizontal space. Refer to ASTM E2780 9.3.1.1

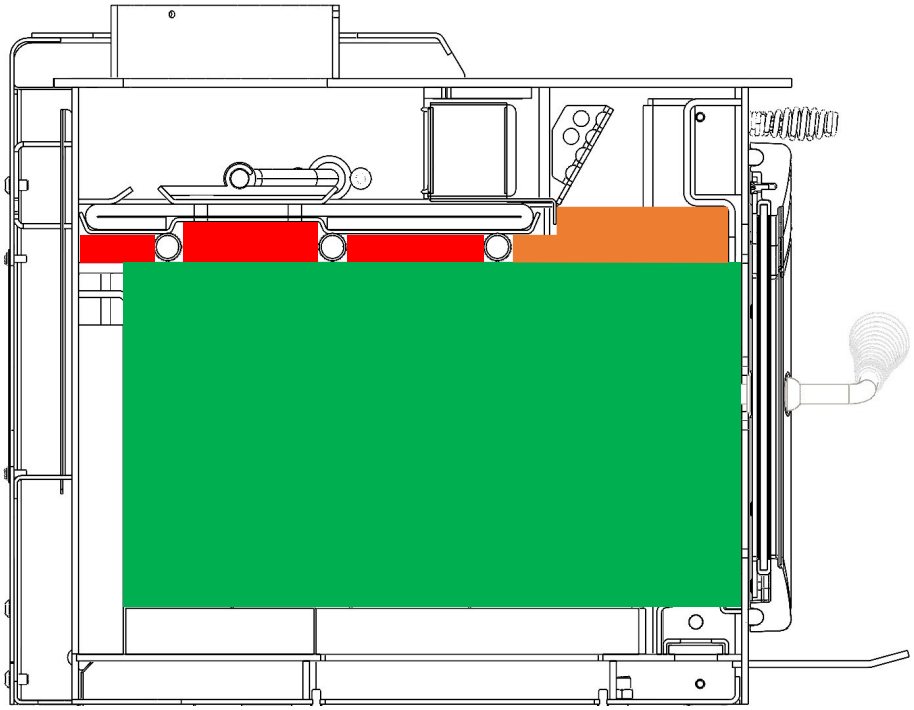

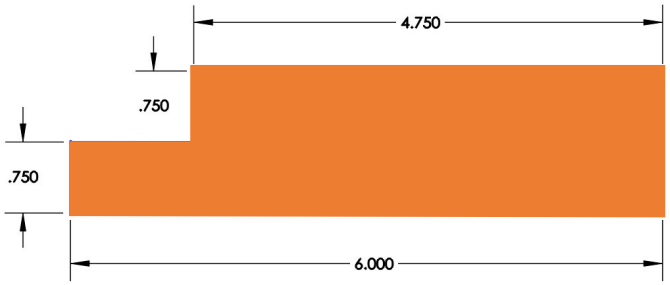

KUMA STOVES; K-181 SERIES

60.533 (k)(2)(i)

FIREBOX DIMENSIONS

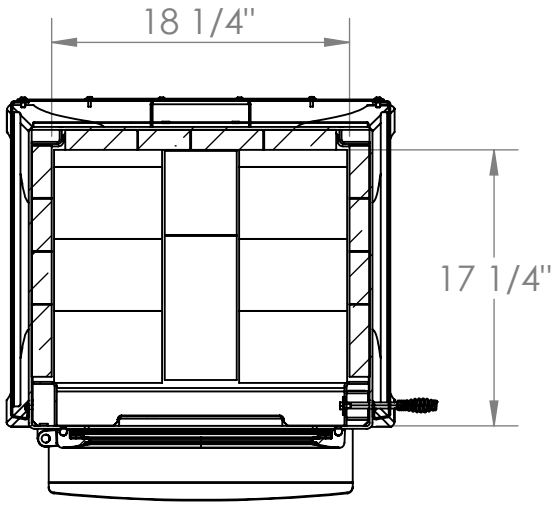

Width: 18 1/4" firebrick sidewall to firebrick sidewall.

Depth: 17.25" Inside firebox face to firebrick backwall.

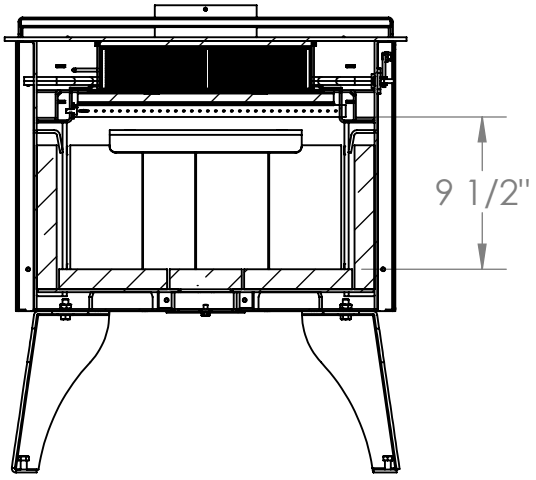

Height: 9 1/2" Firebox floor to secondary burn tubes.

Each of the usable firebox dimensions have been verified.

Width = 18.25”, Depth = 17.25”, Height = 9.50”

Firebox Volume = 18.25”x17.25”x9.50” = 2990.72 In^3 = 1.731 ft^3

Appendix B

REVISION HISTORY

Date	Project No.	Tech. & Evaluator	Report Sect.	Summary of Changes
01/12/2023	0123WM013E (Edition 000)	Tony Tong Ken Morgan	ALL	First Issue of Report
07/27/2023	0123WM013E (Edition 001)	Riley Tiegs Ken Morgan	Preface	Updated Cover page, signatories, and document edition and table of contents.
			Section 1	Updated individual run summaries for clarity on lowest burn rate setting for Run 2 and 3. (pg 7)
				Updated Table 9 and 10 Air settings for clarity.
				Added Cover page and aggregated conditioning data to report (pg27-28)
			Appendix A	Additional Firebox volume drawing added to report for clarity between usable and non-usable volumes. (pg270)