Non-Confidential Business Information (Non-CBI)

Certification Test Report

Manufacturer: Kuma Stoves, Inc.
Heater Type: Wood-Fired Room Heater (Freestanding/Insert, Catalytic)

K - 251 Series
Models: Ashwood LE-1, Wood Classic LE-1, Cambridge LE-1, Cascade LE-1

Prepared for: Kuma Stoves, Inc.
50145 N Old Hwy 95
Rathdrum ID 83858
USA

Prepared by: OMNI-Test Laboratories, Inc.
13327 NE Airport Way
Portland, OR 97230
(503) 643-3788

Test Period: April 12, 2023 – May 16, 2023

Report Issued: May 31, 2023
Revision Date: November 20, 2023

Report Number: 0123WM014E
Project Number: 0123WM014E

All data and information contained in this report are confidential and proprietary to Kuma Stoves, Inc. Its significance is subject to the adequacy and representative character of the samples and to the comprehensiveness of the tests, examinations, or surveys made. The contents of this report cannot be copied or quoted, except in full, without specific, written authorization from Kuma Stoves, Inc. and OMNI-Test Laboratories, Inc. No use of the OMNI-Test Laboratories, Inc. name, logo, or registered mark (O-TL) is permitted, except as expressly authorized by OMNI-Test Laboratories, Inc. in writing.

AUTHORIZED SIGNATORIES

This report has been reviewed and approved by the following authorized signatories:

Evaluator:

Ken Morgan, Technical Services Director
OMNI-Test Laboratories, Inc

TABLE OF CONTENTS

PREFACE ..... (3 pages)

1. APPLIANCE, TESTING AND RESULTS 4
   Introduction 5
   Appliance Description 5
   Test Procedures 6
   Summary of Results 6

   Summary Tables
   Table 1 - Particulate Emissions Results 9
   Table 2 - Particulate Emissions Results (First Hour) 9
   Table 3 – B415.1 Efficiency and CO Emissions 10
   Table 4 - Test Facility Conditions 10
   Table 5 – Fuel Measurement and Crib Description Summary Pretest 11
   Table 6 - Fuel Measurement and Crib Description Summary Test 11
   Table 7 - Dilution Tunnel Gas Measurements and Sampling Data 12
   Table 8 - Average Temperature Data 12
   Table 9 - Pretest Configuration 13
   Table 10 - Test Configurations 14

   Photographs 17
   Example Dilution Tunnel 23

2. TEST DATA BY RUN 24
   Manufacturer's Written Instructions 25
   Conditioning Data 32
   Run 1 55
   Run 2 79
   Run 3 112
   Run 4 144
   Run 5 171
   Run 6 205
   Run 7 238
   Run 8 280

3. QUALITY ASSURANCE/QUALITY CONTROL 310
   Sample Analysis 312
   Calibrations – ASTM E2515, ASTM E2780 331
   Example Calculations 358

4. LABELING & OWNER'S MANUAL 374

   Appendix A Firebox Volume 415
   Appendix B Revision History 418

Section 1

APPLIANCE, TESTING AND RESULTS

Introduction

Kuma Stove, Inc. retained OMNI to perform U.S. Environmental Protection Agency (EPA) certification testing on the Ashwood LE-1 wood stove as part of the K-251 Series. The unit is a Catalytic-type wood burned heater. The firebox is constructed of mild steel. Usable firebox volume was measured to be 2.56 cubic feet and the stove is vented through 6" flue collar located on the stove top.

Testing was performed at OMNI-Test Laboratories located in Portland Oregon. The altitude of the laboratory is 30 feet above sea level. The unit was received in good condition and logged in on April 5, 2023, then assigned and labeled with OMNI ID #2464. The catalyst combustor was conditioned for 50 hours at a medium burn rate at Myren Consulting in Colville, WA. OMNI representative Tony Tong conducted the certification testing and completed all testing by May 16, 2023.

This report is organized in accordance with the EPA-recommended outline and is summarized in the Table of Contents immediately preceding this section. The results in this report are limited to the item submitted.

Appliance Description

The Kuma 251 series is a four stove model line that contains both a freestanding and insert type appliance. Four models contained in the Kuma 251 Series include Ashwood LE-1, Wood Classic LE-1, Cambridge LE-1 and Cascade LE-1. The specific model tested was the Ashwood LE-1. All models share a common firebox, air control system, combustor, and flue exit. Each model has a loading door with a large glass viewing window. An optional 160 cfm blower DC3-C1011-4GS97) is offered by the manufacturer for the freestanding models. All four models are identical with respect to items that could affect emissions performance, the only differences between them are cosmetics in nature. See appendix B for renditions of each model.

Combustion air enters through an intake, varied in area by a manually controlled linear actuator (hereinafter described as "primary air control" or "air control"). At minimum setting (hereinafter described as either "stop position" or "closed"), the air intake area is 0.078 in^2, and at maximum setting (hereinafter described as "fully open") the air intake area is 3.599 in^2. Air travels from the intake to a variety of primary and secondary combustion air ports within the firebox. Primary air enters through an air wash above the loading door and one pilot orifice at the lower front of the firebox. Secondary air enters through four secondary tubes located at the top of the firebox under the baffle. After travelling around the baffle, combustion products exit the firebox through a 6" flue collar located at the top of the unit.

The unit features a 13" x 3" x 2 1/8" metal alloy catalytic combustor (SKU# ACI-5M) to control emissions. It is located above the baffle and combustion products are routed through it when the bypass (controlled by a handle at the upper right of the unit) is closed. Its temperature is monitored by a probe located within 1" from the rear of the combustor.

The glass panel is constructed of 5mm ceramic glass measured 15.01" x 10.23" with a rounded top. The firebox is insulated with 1.25" thick firebrick and 1" thick with a narrow region being only ½" thick ceramic insulation on the baffle plate.

More detailed information is shown in the manufacturer's design drawings of this report. This information is considered confidential business information (CBI) by the manufacturer and is not included in the non-CBI version of this report.

Test Procedures

Model Ashwood LE-1 was tested in accordance with the U.S. EPA 40 CFR Part 60, Subpart AAA – Standards of Performance for New Residential Wood Heaters using ASTM E2515, ASTM E2780 and EPA method 28R. The fuel used for certification testing was air dried Douglas Fir dimensional lumber meeting the specifications of ASTM E2780. Particulate emissions were measured using sampling trains consisting of two Glass Fiber 47mm filters (front and back).

The unit was tested for thermal efficiency and carbon monoxide (CO) emissions in accordance with CSA B415.1-10.
Efficiency results were calculated using spread sheet Version 2.4 created 04/15/2010 and distributed by CSA. Example calculations for CSA B415.1 were not provided by CSA; spreadsheet is protected from modifications by means of a password.

Summary of Results

Testing on the Kuma 251 wood stove consisted of 8 certification tests (Run 1-Run 8) with six (Run 1, Run 2, Run 3, Run 4, Run 6, and Run 7) being used for weighted average calculations. Run 5 test was omitted from the calculations of the weighted average emissions rate and efficiencies at the request of the manufacturer, Run 8 test was a confirmation test and not included in the weighted averages.

The weighted average emissions of the six test runs included in the results indicate a particulate emission rate of 1.09 grams per hour.

Four test runs (Run 2, 3, 5 with the primary air control set to 0.278" from stop position, Run 6 set to 0.184" from stop position) were conducted, and the appliance repeatably obtained a low category II burn rate in excess of 1.0 kg/h. The primary air control was set to stop position to permit less air at full closure, and an attempt (Run 7) at category I was performed successfully. As permitted in Section 6.6 of Method 28 Certification and Auditing of Wood Heaters, Run 5 was omitted from the calculation of the weighted average.

Run 8 test was conducted without unit blower operating at the burn rate of medium low Category II as a fan confirmation test to meet the requirement of ASTM E22780. Emissions rate 0.62 g/h from this test run is less than that of test Run 2, Run 3, Run 4 and Run 6 with blower operating. The Kuma 251 test results are within the emission limit of 2.0 g/h for affected appliances manufactured after May 15, 2020.

The proportionality results for 8 test runs were acceptable. Quality check results for each test run are presented in Section 3 of this report.

Individual Run Summary

Run 1 - Test procedures were followed to produce Category IV burn at a burn rate of 2.18 kg/h with the primary air control set to fully open. Sampling was conducted in accordance with ASTM E2515. Negative filter weights were found on train A (first hour and post first hour), this was caused by filter material transferring to the O-ring gasket. Transfer weight can be seen as a positive weight on the O-rings. Negative filter is added back into the calculation to offset transfer weight as being counted as emissions. No additional sampling anomalies occurred, this test run was determined to be valid and appropriate for inclusion in the weighted average.

Run 2 - Test procedures were followed to produce a medium low burn Category II at 1.04 kg/h with the primary air control set to 0.278" from stop position. Negative filter weights were found on train A (post first hour), this was caused by filter material transferring to the O-ring gasket. Transfer weight can be seen as a positive weight on the O-rings, negative filter is added back into the calculation to offset transfer weight as being counted as emissions. No additional sampling anomalies occurred, this test run was determined to be valid and appropriate for inclusion in the weighted average.

Run 3 - Test procedures were followed to produce a medium low burn Category II at 1.06 kg/h with the primary air control set to 0.278" from stop position. Negative filter weights were found on train A (first hour), this is caused by filter material transferring to the O-ring gasket. Transfer weight can be seen as a positive weight on the O-rings, negative filter is added back into the calculation to offset transfer weight as being counted as emissions. No additional sampling anomalies occurred, this test run was determined to be valid and appropriate for inclusion in the weighted average.

Run 4 - Test procedures were followed to produce a medium high burn Category III at a burn rate of 1.52 kg/h with the primary air control set to 0.778" from stop position. Negative filter weights were found on train A (post first hour), this is caused by filter material transferring to the O-ring gasket. Transfer weight can be seen as a positive weight on the O-rings, negative filter is added back into the calculation to offset transfer weight as being counted as emissions. No additional sampling anomalies occurred. The test was determined to be valid and appropriate in inclusion of the weighted average.

Run 5 - Test procedures were followed to produce a medium low burn Category II at 1.09 kg/h with the primary air control set to 0.278" from stop position. This test run was omitted from the calculation of the weighted average emission rate as permitted in section 8.16 of Method 28 Certification and Auditing of Wood Heaters.

Run 6 - Test procedures were followed to produce a medium low burn Category II at 1.04 kg/h with the primary air control set to 0.184" from stop position. This test run was determined to be valid and appropriate for inclusion in the weighted average.

Run 7 - Test procedures were followed to produce a low burn Category I at 0.72 kg/h with the primary air control set to stop position. Negative filter weights were found on train A (first hour), this is caused by filter material transferring to the O-ring gasket. Transfer weight can be seen as a positive weight on the O-rings, negative filter weight is added back into the calculation to offset transfer weight as being counted as emissions. No additional sampling anomalies occurred, this test run was determined to be valid and appropriate for inclusion in the weighted average.

Run 8 - Test procedures were followed to produce a medium low burn Category II at 1.16 kg/h with the primary air control set to 5/16" from stop position. This test run was conducted without the blower operating to compare the emission rate to that from the test run in burn rate category 2 with blow operating to determine if the unit has the same average emission rate with or without the blower operating. Negative filter weights were found on train A (first hour and post first hour) and train B, this is caused by filter material transferring to the O-ring gasket. Transfer weight can be seen as a positive weight on the O-rings, negative filter weight is added back into the calculation to offset transfer weight as being counted as emissions. No additional sampling anomalies occurred. This test run was determined to be valid and appropriate. This fan confirmation test is not included in the weighted averages for the emissions and efficiencies.

Table 1 – Particulate Emissions

Run	**Burn Rate** (kg/h dry)	**Emissions** (g/h) Uncorrected[1]	**Emissions** (g/h) Corrected[2]
1	2.18	0.38	0.46
2	1.04	2.63	2.69
3	1.06	1.45	1.49
4	1.52	0.69	0.71
5	1.09	5.02	5.02
6	1.04	1.24	1.24
7	0.72	1.56	1.59
8	1.16	0.62	0.82
Weighted Average (Runs1, 2, 3, 4, 6 and 7)		1.09	1.12

[1]UNCORRECTED - Values are those data reported as directed by the test method and are the values that will be used for compliance determination purposes. This means that filters with missing mass will be reported as they are when recovered and weighed.

[2]CORRECTED Values that represent a revised calculation that assumes any missing filter mass (negative filter weights) are counted as zero (rather than negative) and, as such, these corrected values will always be slightly higher than uncorrected values given that there is more mass in the calculations.

Table 2 – Particulate Emissions (First Hour)

Run	**ASTM E2515 Emissions – First Hour (g/h)** Uncorrected[1]	**ASTM E2515 Emissions – First Hour (g/h)** Corrected[2]
1	1.41	1.54
2	4.16	4.16
3	3.56	4.06
4	2.71	2.71
5	10.81	10.81
6	4.47	4.47
7	2.14	2.68
8	2.25	2.76

[1]UNCORRECTED - Values are those data reported as directed by the test method and are the values that will be used for compliance determination purposes. This means that filters with missing mass will be reported as they are when recovered and weighed.

[2]CORRECTED Values that represent a revised calculation that assumes any missing filter mass (negative filter weights) are counted as zero (rather than negative) and, as such, these corrected values will always be slightly higher than uncorrected values given that there is more mass in the calculations.

Table 3 – B415.1 Efficiency and CO Emissions

Run	Heat Output (BTU/h)	HHV Efficiency (%)	LHV Efficiency (%)	CO Emissions (g/MJ Output)	CO Emissions (g/kg Dry Fuel)	CO Emissions (g/min)
1	30,612	74.8	80.8	0.72	10.67	0.387
2	15,067	77.3	83.6	1.74	26.73	0.462
3	15,429	77.5	83.7	2.35	36.00	0.636
4	21,779	76.2	82.4	1.87	28.28	0.717
5	12,225	59.8	64.7	3.63	43.01	0.780
6	15,694	80.0	86.5	1.18	18.70	0.325
7	11,219	80.5	87.0	2.09	33.34	0.412
8	16,967	78.0	84.3	2.29	35.34	0.682
Weighted average HHV efficiency of 6 test runs (Run 1-Run4, Run 6-Run7): = **77.8%** Average CO Emissions of 6 tests (Run 1-Run4, Run 6-Run 7): = **0.490 g/min**						

Note: Results for run 5 are not used on the weighted average as permitted in Section 8.16 of Method 28 Certification and Auditing of Wood Heaters, run 8 results are only for fan confirmation comparison.

Table 4 – Test Facility Conditions

Run	Room Temperature (°F)		Barometric Pressure (Hg)		Air Velocity (ft/min)	
	Before	After	Before	After	Before	After
1	60	60	30.11	30.11	<50	<50
2	60	63	30.07	29.96	<50	<50
3	62	62	29.76	29.72	<50	<50
4	61	62	29.96	29.97	<50	<50
5	69	73	29.71	29.80	<50	<50
6	69	73	30.14	30.03	<50	<50
7	75	77	30.13	30.05	<50	<50
8	81	82	30.12	30.01	<50	<50

Table 5 – Fuel Measurement and Description Summary – PRETEST
Douglas Fir Dimensional Lumber

Run	**Pretest Fuel Weight** (lbs)	**Fuel Moisture** (Dry basis - %)	**Coal Bed Weight** (lbs)
1	10.0	21.48	3.7
2	9.9	21.88	3.7
3	9.9	20.72	3.5
4	9.9	20.53	3.6
5	9.9	22.56	3.9
6	10.1	20.37	3.6
7	10.1	19.98	4.1
8	9.9	20.05	3.6

Table 6 – Fuel Measurement and Crib Description Summary – TEST
Douglas Fir Dimensional Lumber

Run	**Test Fuel Wet Basis** (lbs)	**Firebox Volume** (ft^3)	**Loading Density Wet Basis** (lbs/ft^3)	**Test Fuel Dry Basis** (lbs)	**Length** (in)	**2x4s Used**	**4x4s Used**
1	17.2	2.51	6.85	14.16	17.25	4	2
2	17.5	2.51	6.97	14.36	17.25	4	2
3	17.3	2.51	6.89	14.33	17.25	4	2
4	17.1	2.51	6.81	14.19	17.25	4	2
5	18.7	2.51	7.45	15.26	17.25	4	2
6	17.9	2.51	7.13	14.87	17.25	4	2
7	17.9	2.51	7.13	14.92	17.25	4	2
8	16.8	2.51	6.69	13.99	17.25	4	2

Table 7 – Dilution Tunnel Gas Measurements and Sampling Data Summary

Run	Length of Test (min)	Average Dilution Tunnel Gas Measurements		
		Velocity (ft/sec)	**Flow Rate** (dscf/min)	**Temperature** (°F)
1	177	18.58	208.3	87
2	377	18.34	209.6	75
3	368	17.83	202.2	74
4	254	18.37	207.6	80
5	382	18.62	208.3	82
6	388	24.89	282.7	79
7	563	25.28	284.4	84
8	329	24.60	270.9	96

Table 8 - Average Temperature Data

Run	Beginning Surface Temperature Average[a]	Ending Surface Temperature Average[a]	Surface Delta T[b]
1	448	393	55
2	416	342	74
3	424	345	79
4	474	414	60
5	375	350	25
6	430	329	101
7	386	293	93
8	444	390	54

[a] All temperatures are in degrees F.
[b] Represents the difference between beginning and ending average surface temperatures.

Table 9 – Pretest Configuration

Run	**Combustion Air**	**Fuel Added**	**Fuel Added**	**Time** (min)
1	Fully Open	N/A	N/A	81
2	0.278” open from stop position	N/A	N/A	60
3	0.278” open from stop position	N/A	N/A	60
4	0.778” open from stop position	N/A	N/A	67
5	0.278” open from stop position	N/A	N/A	110
6	0.184” open from stop position	N/A	N/A	60
7	Closed	N/A	N/A	90
8	5/16” Open from stop position	N/A	N/A	70

Note: The factory engineered stop position has been designed into the Kuma-251 to prevent the adjustable air from being closed further than the minimum setting.

Table 10 – Test Configurations

Run	Startup Procedures	Combustion Air
1	Bypass: Open for 90 seconds then closed when fuel loaded Fuel Loading: Fuel Loading was completed by 85 seconds. Door: Fuel door was open to load fuel, then closed at 90 seconds. Primary Air: Air control fully open for entire test. Secondary: No user control for secondary air. Fan: Fan off for first 5 minutes then set to high	Fully Open
2	Bypass: Open then closed when door closed Fuel Loading: Fuel loading was completed by 55 seconds. Door: Fuel door was open to load fuel, then closed at 70 seconds. Primary Air: Set to 0.278" from stop position. Secondary: No user control for secondary air. Fan: Fan off for first 30 minutes then set to low.	Air control set to 0.278" from stop
3	Bypass: Closed once fuel loaded Fuel Loading: Fuel loading was completed by 60 seconds. Door: Fuel door was open to load fuel, then closed at 65 seconds. Primary Air: Set to 0.278" from stop position. Secondary: No user control for secondary air. Fan: Fan off for first 30 minutes then set to low	Air control set to 0.278" from stop
4	Bypass: Closed once fuel loaded Fuel Loading: Fuel loading was completed by 60 seconds. Door: Fuel door was opened to load fuel, then closed at 75 seconds. Primary Air: Set to 0.778" from stop position. Secondary: No user control for secondary air. Fan: Fan off for first 5 minutes then set to high	Air control set to 0.778" from stop
5	Bypass: Closed once fuel loaded Fuel Loading: Fuel loading was completed by 60 seconds. Door: Fuel door was open to load fuel, then closed at 70 seconds. Primary Air: Set to 0.278" from stop position. Secondary: No user control for secondary air. Fan: Fan off for first 30 minutes then set to low	Air control set to 0.278" from stop
6	Bypass: Closed once fuel loaded Fuel Loading: Fuel loading was completed by 50 seconds. Door: Fuel door was opened to load fuel, then closed at 60 seconds. Primary Air: Set to 0.184" from stop position. Secondary: No user control for secondary air. Fan: Fan off for first 30 minutes then set to low	Air control set to 0.184" from stop
7	Bypass: Closed once fuel loaded Fuel Loading: Fuel loading was completed by 55 seconds. Door: Fuel door was opened to load fuel, then closed at 65 seconds. Primary Air: Fully open for first 2.5 min then set to stop position. Secondary: No user control for secondary air. Fan: Fan off for first 30 minutes then set to low	Air control set to stop position
8	Bypass: Closed once fuel loaded Fuel Loading: Fuel loading was completed by 45 seconds. Door: Fuel door was closed at 58 seconds Primary Air: Set to 5/16" from stop position. Secondary: No user control for secondary air.	Air control set to 5/16" from stop position

Note: The factory engineered stop position has been designed into the Kuma-251 to prevent the adjustable air from being closed further than the minimum setting.

EPA Weighted Average Emissions
EPA Method 28R

Client:	Kuma Stoves	Status:	Report
Stove Model:	K-251	Stove Type:	Catalytic Stove
Test Dates:	4/12/23 - 5/16/23		
Project Number:	0123WM014E		
Tracking Number:	2464		

Weighted Averages (Uncorrected)		
	Emissions (g/hr):	1.09
	HHV Efficeincy (%):	77.8
	LHV Efficeincy (%):	84.1

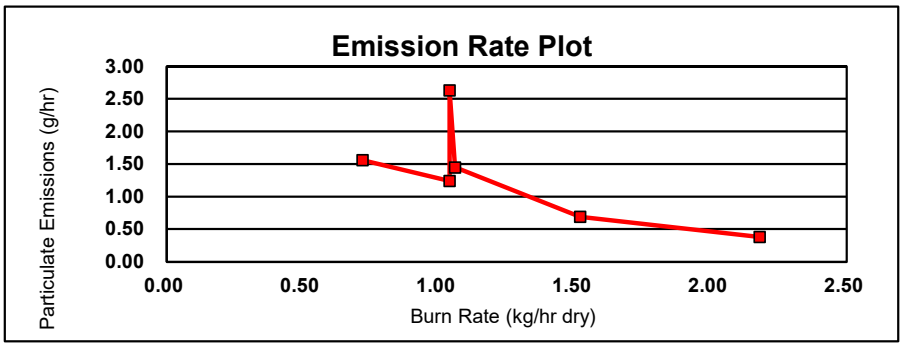

Run #	7	
Burn Rate (dry kg/hr)	0.72	
Category	1	
LHV Efficiency (%)	87	
HHV Efficiency (%)	80.5	
Emissions (g/hr)	1.56	
Weighting Factor	0.402	22.68%

Run #	4	
Burn Rate (dry kg/hr)	1.52	
Category	3	
LHV Efficiency (%)	82.4	
HHV Efficiency (%)	76.2	
Emissions (g/hr)	0.69	
Weighting Factor	0.517	29.19%

Run #	6	
Burn Rate (dry kg/hr)	1.04	
Category	2	
LHV Efficiency (%)	86.5	
HHV Efficiency (%)	80	
Emissions (g/hr)	1.24	
Weighting Factor	0.238	13.42%

Run #	1	
Burn Rate (dry kg/hr)	2.18	
Category	4	
LHV Efficiency (%)	80.8	
HHV Efficiency (%)	74.8	
Emissions (g/hr)	0.38	
Weighting Factor	0.238	13.47%

Run #	2	
Burn Rate (dry kg/hr)	1.04	
Category	2	
LHV Efficiency (%)	83.6	
HHV Efficiency (%)	77.3	
Emissions (g/hr)	2.63	
Weighting Factor	0.016	0.90%

Run #	3	
Burn Rate (dry kg/hr)	1.06	
Category	2	
LHV Efficiency (%)	83.7	
HHV Efficiency (%)	77.5	
Emissions (g/hr)	1.45	
Weighting Factor	0.360	20.33%

EPA Weighted Average Emissions
EPA Method 28R

Client:	Kuma Stoves	Status:	Report
Stove Model:	K-251	Stove Type:	Catalytic Stove
Test Dates:	4/12/23 - 5/16/23		
Project Number:	0123WM014E		
Tracking Number:	2464		

Weighted Averages (Corrected)		
	Emissions (g/hr):	1.12
	HHV Efficeincy (%):	77.8
	LHV Efficeincy (%):	84.1

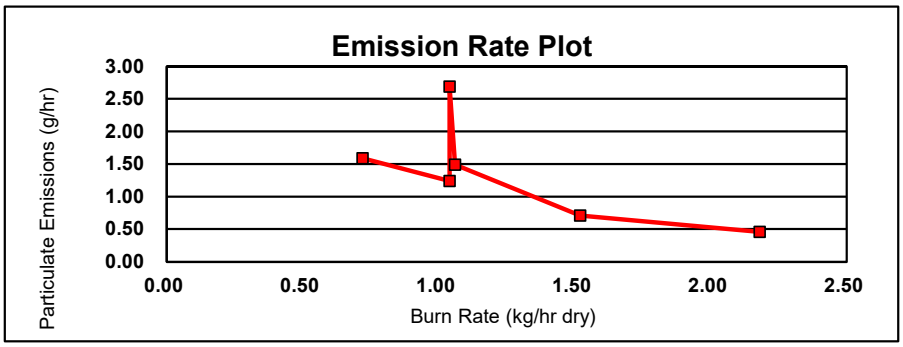

Run #	7	
Burn Rate (dry kg/hr)	0.72	
Category	1	
LHV Efficiency (%)	87	
HHV Efficiency (%)	80.5	
Emissions (g/hr)	1.59	
Weighting Factor	0.402	22.68%

Run #	4	
Burn Rate (dry kg/hr)	1.52	
Category	3	
LHV Efficiency (%)	82.4	
HHV Efficiency (%)	76.2	
Emissions (g/hr)	0.71	
Weighting Factor	0.517	29.19%

Run #	6	
Burn Rate (dry kg/hr)	1.04	
Category	2	
LHV Efficiency (%)	86.5	
HHV Efficiency (%)	80	
Emissions (g/hr)	1.24	
Weighting Factor	0.238	13.42%

Run #	1	
Burn Rate (dry kg/hr)	2.18	
Category	4	
LHV Efficiency (%)	80.8	
HHV Efficiency (%)	74.8	
Emissions (g/hr)	0.46	
Weighting Factor	0.238	13.47%

Run #	2	
Burn Rate (dry kg/hr)	1.04	
Category	2	
LHV Efficiency (%)	83.6	
HHV Efficiency (%)	77.3	
Emissions (g/hr)	2.69	
Weighting Factor	0.016	0.90%

Run #	3	
Burn Rate (dry kg/hr)	1.06	
Category	2	
LHV Efficiency (%)	83.7	
HHV Efficiency (%)	77.5	
Emissions (g/hr)	1.49	
Weighting Factor	0.360	20.33%

Photographs

Kuma Stoves, Inc.
Kuma-251
Test Dates: April 12, 2023 – May 16, 2023

Kuma Stoves, Inc.
Kuma - 251
Run 1 – Run 8

Run 1 – Test Fuel

Run 1 – Fuel Loaded

Run 2 – Test Fuel

Run 2 – Remaining Coal Bed

Run 3 – Test Fuel

Run 3 – Test Fuel Loaded

Run 4 – Test Fuel

Run 4 – Remaining Coal

Run 5 – Test Fuel

Run 5 – Pre-burn Fuel

Run 6 – Test Fuel

Run 6 - Test Fuel Loaded

Run 7 – Test Fuel Loaded

Run 7– Remaining Coal

Run 8 – Test Fuel

Run 8 – Test Fuel Loaded

Banded / Sealed

Example of ASTM E2515-11 Dilution Tunnel

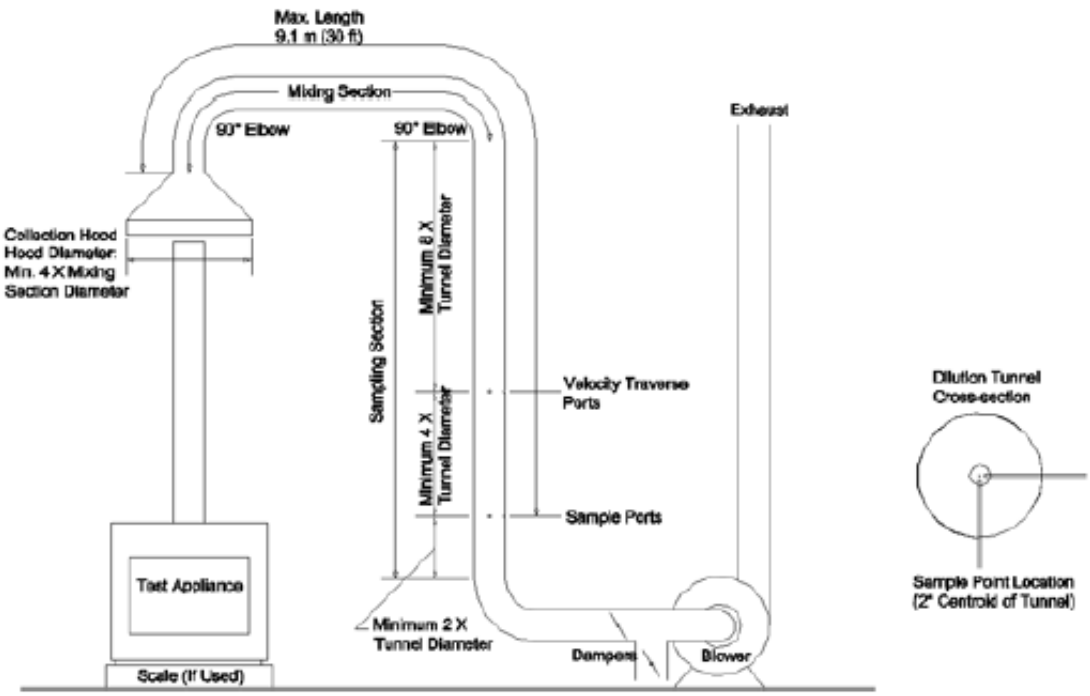

Prior to testing, sample point and travers point locations are verified to ensure placement is within specifications. Collection hood, tunnel diameter, and mixing section length are also verified to be within specifications.

Section 2

TEST DATA BY RUN

Manufacturer’s Written Instructions

3/15/23

OPERATING INSTRUCTIONS FOR THE KUMA 251 SERIES

The operating instructions for the KUMA 251 series catalytic wood stoves for EPA certification testing are as follows:

Primary Air Control (PAC):

To increase the amount of primary combustion air entering the stove, pull the control rod at bottom right side of the stove out, away from the stove. To decrease the amount of combustion air entering the stove, push the rod into the stove. Set the primary air control as follows to achieve the desired Burn Categories.

There is an adjustable shaft collar on the PAC rod that can be moved. Presently it is set for the Category 3 test so that the Primary Air Inlet Orifice is open 1/2″ plus "the stop" when the rod is pushed in and the shaft collar is up against the side heat shield. To set the PAC at the stop, the shaft collar must be loosened so that the PAC butts up against the STOP when the PAC rod is pushed all the way in. Be certain to check this setting before a test because it may have moved during shipment. To set the shaft collar for a run, loosen the shaft collar and push the PAC control rod all the way in so that the PAC is at "the stop" for the minimum air setting. Then measure the distance from the end of the rod to the side of the stove with a T-square. Once that distance is known, add the distance for the desired air setting to the "stop" setting, pull the rod out that amount, slide the shaft collar up against the side of the stove and then tighten in place. To check to see if the setting is correct, put a drill bit of the same size between the shaft collar and the side of the stove. Adjust as necessary to obtain correct setting.

Burn Category/ Primary Air Control:

Category 1 (Low): Push the primary air control all the way to the stop.

Category 2 (M Low): Set the PAC at the stop plus 1/8″ to 1/4".

Category 3 (M Hi): Set the PAC at the stop plus 1/2″ to 3/4″.

Category 4 (Hi): Set the PAC at wide open.

Fan Confirmation Test (FCT)(M Low): Set the PAC at 1/8″ to 1/4".

Fan Operation:

Categories 1 & 2: on Low @ 30 minutes.

Categories 3: on Low @ 15 minutes.

Category 4: on High @ 5 minutes.

Cat Bypass:

Open the Cat Bypass before opening the stove's door to either load or adjust a burning fuel load. The handle for the cat bypass is located on the top right side of the stove front. (See Top Sketch on Page 1 in Cat Installation Instructions in Aging section.) To open the bypass handle, slowly pull the

handle towards you (about 1/2″-3/4″), then slowly let the bypass mechanism return towards its original position. The bypass mechanism operates using gravity. If the bypass handle is pulled far enough away from front of the stove and then allowed to slowly return towards its original position, its "internal latch" mechanism will automatically find the "open location" and stay there, keeping the bypass open. To close the bypass, simply lift the handle a little bit (<1/2″), the latch will disengage, and the bypass will close. When the bypass is closed, the handle should return to its original location. Always close the Bypass as quickly as possible after loading and the door is closed.

Door: As soon as the fuel load has been loaded into the firebox, close the door to about 0.5″ to 1.0″ open until the fire ignites. Monitor and adjust the door opening to maximize air flow into the firebox and enhance ignition by watching the coals in the firebox. Brighter coals indicate better air flow. Close the door once ignition is well established, typically no more than 30 seconds after ignition occurs. If the amount of fire decreases dramatically or goes out when the door is closed, reopen the door immediately to reignite or reestablish the fire the fuel load.

Lower Primary Air Orifice (LPAO): Always clear the coals away from in front of the center LPAO back about 2″ into the firebox from the rear edge of the primary air bottom cross duct. (See Applicability Determination # 60)

SET-UP INSTRUCTIONS FOR THE KUMA 251 SERIES TEST RUNS

Burn	Low	M Low	M Hi	Hi	
Kindling (finely split)	~4.0 lbs.	~ 4.0 lbs.	~4.0 lbs.	~4.0 lbs.	Load all the Kindling & 1st rick in the stove before igniting with propane torch
1st Rick	4-12″ 2x4′s 4-16″ 2x4′s 10.5-12.5 lbs.	4-12″ 2x4′s 4-16″ 2x4′s 10.5-12.5 lbs.	8-12″ 2x4′s 4-16″ 2x4′s 10.5-12.5 lbs.	4-12′ 2X4′s 4-16″ 2x4′s 10.5-12.5 lbs.	Leave door cracked open for Start

Burn 1st rick until no yellow flames are in firebox, i.e., all is charcoal. If necessary, rake the coals once to facilitate achieving charcoal.

Add 2nd Rick	4-12″ 2x4′s 4-16″ 2x4′s 10.5-12.5 lbs.	4-12″ 2x4′s 4-16″ 2x4′s 10.5-12.5 lbs.	8-12″ 2x4′s 4-16″ 2x4′s 10.5-12.5 lbs.	4-12′ 2X4′s 4-16″ 2x4′s 10.5-12.5 lbs.

Burn 2nd rick until no yellow flames are in firebox, i.e., all is charcoal. If necessary, rake the coals once to facilitate achieving charcoal.

Scoop all hot burning coals out of the stove. Record dry, empty stove weight.

Put the following amount of Hot coals back in stove for each test run. Level coals in stove.

	2.0 lbs.	2.0 lbs.	2.0 lbs.	3.0 lbs.
Add 3rd rick	4-12″ 2x4′s 3-16″ 2x4′s 10.0-10.1 lbs.	4-12″ 2x4′s 3-16″ 2x4′s 10.0-10.1 lbs.	8-12″ 2x4′s 3-16″ 2x4′s 10.0-10.1 lbs.	4-12′ 2X4′s 3-16″ 2x4′s 10.0-10.1 lbs. DO NOT DEVIATE!
Pre Burn	Adjust PAC To run Setting 3.2 Lbs. above Upper coal Bed Wt.	Adjust PAC to run Setting 3.7 lbs. above Upper coal Bed Wt.	Adjust PAC to run Setting 6.0 lbs. above Upper coal Bed Wt.	Start Preburn as soon as door and bypass are closed, turn fan onto Hi and start Preburn

<u>Load the stove at about halfway into the coal bed. Breakdown and level the coals. You do not need to pack the coal bed. Locate LPAO hole below the bottom center of the door opening. Load 1st 2x4 to right</u>

of LPAO. Then load 2nd 2x4 so LPAO air is shooting down the Canyon between the two fuel stacks. Then load 4x4's on top of 2x4's followed by the last 2 2x4's. See Sketch.

Lbs. of Coals @ Test Start	**3.8-4.0**	**3.5-4.0**	**2.7-2.8**	**3.8-4.0**
Est. Preburn	**~60**	**~60**	**~60**	**60-65**
Delta T @ Test Start	**345-350F**	**360-370F**	**375-385**	**430-440F**

Ricks for Kiln 251 Series

4 - 12" 2x4 D. Fir
4 - 16" 2x4 "

For Rick #1 put kindling under and on top of 2x4's

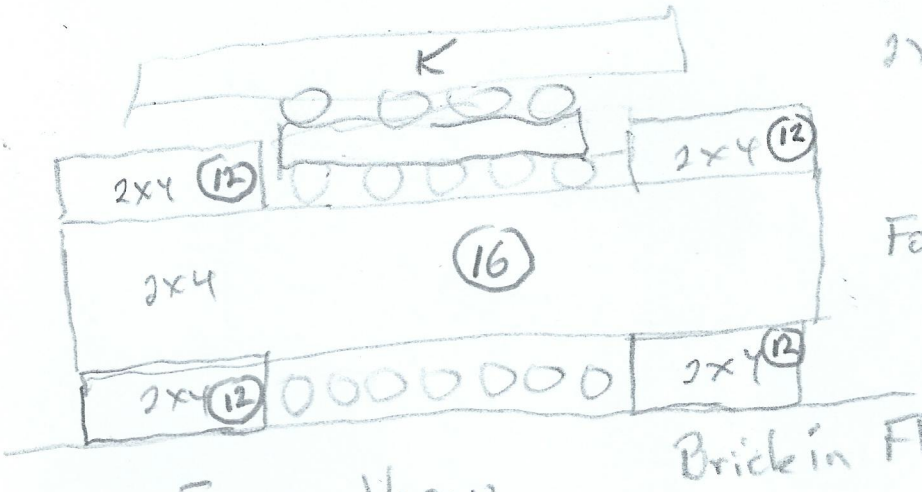

Front View

For R1

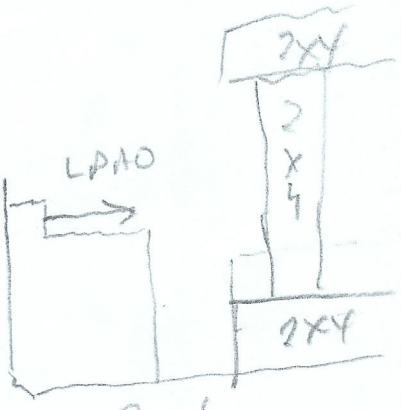

Brick

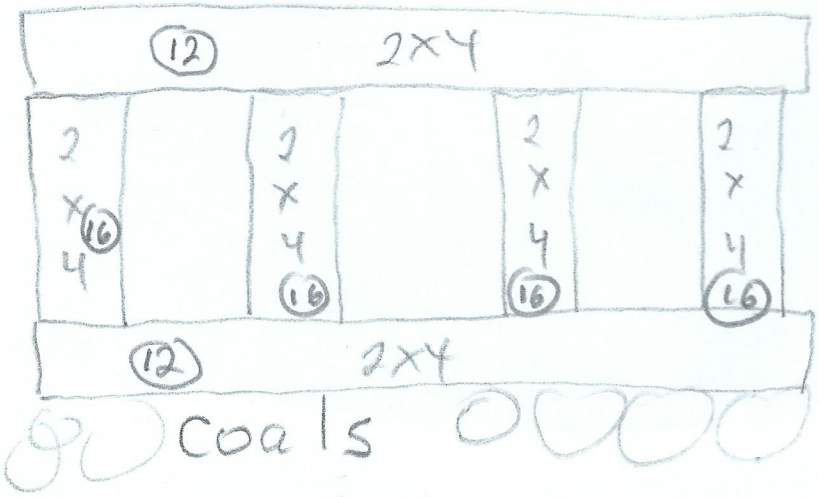

Side View

Ricks 2 & 3 put on top of Hot Coals

3rd rick has only 3 - 16" 2x4's in it - to make right weight - space not evenly

Kama 251 Series

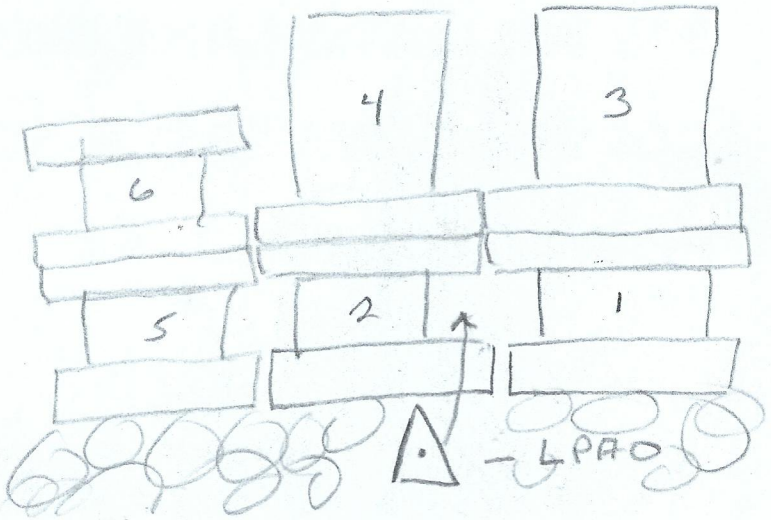

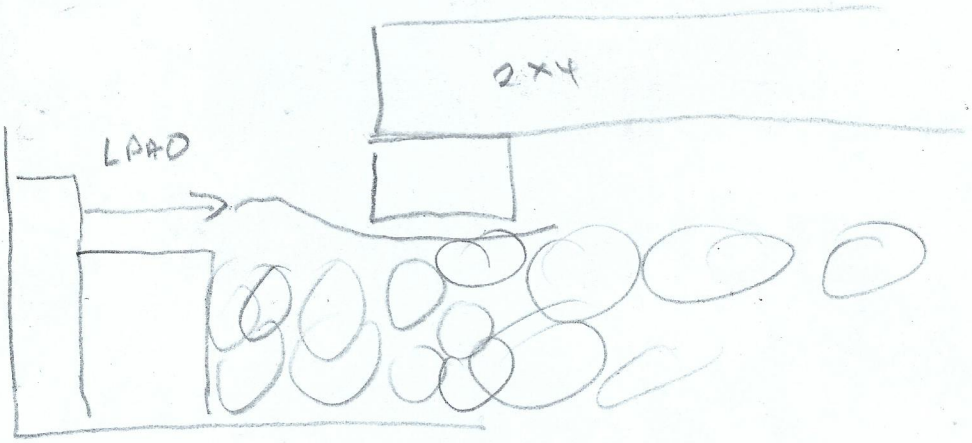

when clearing coals from in front of the LPAO you want to create a pathway under the SPACERS in pcs 1 & 2 as shown above.

Conditioning Data

Conducted by Myren Consulting Inc, in Colville Washington at Medium Burn Rate

Unit: Kuma 251 Series
Date:
Technicians: ATM LSS
Page : 1 of 2

Wood Heater Aging Data
Woodstove Test Data Sheet #25
WST 5-Form 3, Rev 1/15

		T/C#	7	1	16	17		
Hr. #	2022 **Date**	**Time**	**Firebox Temp**	**Stack @ 8'**	**Pre Cat**	**Post Cat**	PAC @	**Comments**
1	12/5	1432	515	614	939	729	½"	Fuel Load #[illegible]
2		1532	754	418	770	663		@ 13:32
3		1632	814	265	583	454		DBR 1.7078
4	✓	1732	705	235	514	396	+ 10 mins	
5	12/6	1339	525	353	1233	1041	½"	Fuel Load #9
6		1439	679	333	1211	1038		Loaded @ 13:[illegible]
7		1539	661	250	724	738		DBR [illegible]
8		1634	628	216	670	645		
9		1734	534	206	563	599		
10		1834	379	194	489	612	½"	Fuel Load #6
11		1934	372	286	1005	887		Loaded @ 18:[illegible]
12		2034	458	262	838	860		DBR [illegible]
13		2134	566	271	763	815		
14		2234	550	239	664	716		
15		2334	527	217	802	655		
16	12/7	0034	390	298	829	901		Fuel Load #7
17		0134	541	309	970	920		Loaded @ 0134
18		0234	636	296	947	885		DBR 1.0[illegible]
19		0334	253	253	710	747		
20		0434	540	224	532	632		
21		0534	522	215	634	649		
22		0634	511	220	608	652		
23	↓	0734	433	200	486	563	+ 7 mins	
24	12/8	13:24	493	350	1145	1021		Fuel Load #18
25		14:24	670	321	1062	994		Loaded @ 12:24
26		15:24	693	266	820	801		DBR 0.9652
27	↓	16:24	735	220	648	641	+ 175 mins	
28	2/1/23	1416	457	281	1187	1041	PAC	Fuel Loaded [illegible]
29	↓	1516	562	244	923	949	@ Stop	1516

Unit: Kuma 251 Series
Date:
Technicians: ATM ESS
Page : 2 of 2

Wood Heater Aging Data
Woodstove Test Data Sheet #25
WST 5-Form 3, Rev 1/15

		T/C#	7	1	16	17	
Hr. #	**Date**	**Time**	**Firebox Temp**	**Stack @ 8'**	**Pre Cat**	**Post Cat**	**Comments**
30	2/1/23	1616	587	179	657	661	DBR = 0.8677
31		1716	502	153	539	572	
32		1816	513	147	548	583	
33		1916	493	137	478	512	Post Cat temp > 500 °F means
34		2016	426	135	467	521	Cat was working
35	2/3/23	1357	418	291	1126	1042	PAC Fuel loaded @
36		1457	593	269	958	953	Stop 1257
37		1557	598	184	646	630	+ 1/8" DBR = 0.9791
38		1657	535	170	577	596	
39		1757	457	165	546	581	
40		1857	423	156	532	553	
41	2/8/23	1424	507	323	1219	1090	PAC Fuel loaded @
42		1524	594	297	897	963	Stop 1324
43		1624	555	252	736	780	+ 1/8" DBR = 1.0201
44		1724	534	224	657	685	
45		1824	515	220	629	674	
46		1924	467	214	595	640	
47	2/18/23	1353	630	346	1154	1172	PAC Fuel loaded @
48		1453	651	291	859	852	Stop 1253
49		1553	592	237	718	704	+ 1/2" DBR = 1.2480
50		1653	507	217	614	639	
51		1753	460	205	569	593	

MYREN CONSULTING, INC. Fuel Load #1 BOW

UNIT: Kuma 251 Series
RUN: Fuel Load #1 Fire #1
DATE: 12/2/22
TECHNICIANS: ATM ESS
Rev 3 2.2.21

WEIGHT OF THE TEST FUEL LOAD, DRY BASIS (M_{FLdb})

EQN 1: $M_{FLdb} = \Sigma((M_{FLnwb})(100)/(100+MC_{FLndb}))$

M_{FL1db} = ((4.240 lbs.)(100)/ (100 + 20.700 %)) = 3.5178 lbs.

M_{FL2db} = ((4.112 lbs.)(100)/ (100 + 21.300 %)) = 3.3899 lbs.

M_{FL3db} = ((3.596 lbs.)(100)/ (100 + 21.467 %)) = 2.9625 lbs.

M_{FL4db} = ((3.812 lbs.)(100)/ (100 + 19.167 %)) = 3.1989 lbs.

M_{FL5db} = ((3.866 lbs.)(100)/ (100 + 19.800 %)) = 3.2270 lbs.

M_{FL6db} = ((_____ lbs.)(100)/ (100 + _____ %)) = _____ lbs.

M_{FL7db} = ((_____ lbs.)(100)/ (100 + _____ %)) = _____ lbs.

TOTAL M_{FLdb} : 16.1892 lbs. 7.3887 kg

WEIGHT BASED COMPOSITE FUEL LOAD MOISTURE CALCULATIONS

Pc #	Wet Weight (lbs.)		Piece Average (% Dry)		Contribution to Fuel Load Average
1	4.240	x	20.700	=	87.7680
2	4.112	x	21.300	=	87.5856
3	3.596	x	21.467	=	77.1941
4	3.812	x	19.167	=	73.0633
5	3.866	x	19.800	=	76.5468
6		x		=	
7		x		=	
8		x		=	
9		x		=	
TOTALS	19.626 (A)				402.1578 (B)

Fuel Burnt

_____ lbs. (DB)

_____ kg (DB)

Dry Burn Rate (DBR):

(dkg/Time) 60 =

(_____/ _____) 60=

_____ kg/h (DBR)

FUEL LOAD COMPOSITE AVG. MOISTURE(% DB): 20.4911 (B÷A)

FUEL LOAD COMPSITE AVG. MOISTURE (% WB): 17.0063

Note: The individual moisture readings for each cord wood fuel piece were corrected for temperature and species prior to a piece average %DB being calculated on the Cordwood Piece Data Sheet.

MYREN CONSULTING, INC. Fuel Load # 2 TOW

UNIT: Kuny 251 Series
RUN: Fuel Load # 2 Fire # 2
DATE: 12/5/22
TECHNICIANS: ATM ESS
Rev 3 2.2.21

WEIGHT OF THE TEST FUEL LOAD, DRY BASIS (M_{FLdb})

EQN 1: $M_{FLdb} = \Sigma((M_{FLnwb})(100)/(100+MC_{FLndb}))$

M_{FL1db} = ((4.166 lbs.)(100)/ (100 + 20.167 %)) = _____ lbs.

M_{FL2db} = ((3.690 lbs.)(100)/ (100 + 19.333 %)) = _____ lbs.

M_{FL3db} = ((3.878 lbs.)(100)/ (100 + 20.567 %)) = _____ lbs.

M_{FL4db} = ((3.766 lbs.)(100)/ (100 + 20.867 %)) = _____ lbs.

M_{FL5db} = ((3.888 lbs.)(100)/ (100 + 19.067 %)) = _____ lbs.

M_{FL6db} = ((_____ lbs.)(100)/ (100 + _____ %)) = _____ lbs.

M_{FL7db} = ((_____ lbs.)(100)/ (100 + _____ %)) = _____ lbs.

TOTAL M_{FLdb} : 16.1634 lbs. 7.3317 kg

WEIGHT BASED COMPOSITE FUEL LOAD MOISTURE CALCULATIONS

Pc #	Wet Weight (lbs.)		Piece Average (% Dry)		Contribution to Fuel Load Average
1	4.166	x	20.167	=	84.0143
2	3.690	x	19.333	=	71.4947
3	3.878	x	20.567	=	79.7575
4	3.766	x	20.867	=	78.5839
5	3.888	x	19.067	=	74.1312
6		x		=	
7		x		=	
8		x		=	
9		x		=	
TOTALS	19.396 (A)				387.9816 (B)

Fuel Burnt _____ lbs. (DB)

_____ kg (DB)

Dry Burn Rate (DBR):

(dkg/Time) 60 =

(_____ / _____) 60 =

_____ kg/h (DBR)

FUEL LOAD COMPOSITE AVG. MOISTURE (% DB): 20.0032 (B+A)

FUEL LOAD COMPSITE AVG. MOISTURE (% WB): 16.6689

Note: The individual moisture readings for each cord wood fuel piece were corrected for temperature and species prior to a piece average %DB being calculated on the Cordwood Piece Data Sheet.

MYREN CONSULTING, INC. Fuel Load #3 [redacted]

UNIT: Kuma 251 Sonia
RUN: Fuel Load #3 Run 2
DATE: 12/15/22
TECHNICIANS: JM BS

Rev 3 2.2.21

WEIGHT OF THE TEST FUEL LOAD, DRY BASIS (M_{FLdb})

EQN 1: $M_{FLdb} = \Sigma((M_{FLnwb})(100)/(100+MC_{FLndb}))$

M_{FL1db} = ((3.856 lbs.)(100)/ (100 + 19.200 %)) = _____ lbs.

M_{FL2db} = ((3.676 lbs.)(100)/ (100 + 19.900 %)) = _____ lbs.

M_{FL3db} = ((3.796 lbs.)(100)/ (100 + 19.700 %)) = _____ lbs.

M_{FL4db} = ((3.550 lbs.)(100)/ (100 + 20.167 %)) = _____ lbs.

M_{FL5db} = ((3.736 lbs.)(100)/ (100 + 19.033 %)) = _____ lbs.

M_{FL6db} = ((_____ lbs.)(100)/ (100 + _____ %)) = _____ lbs.

M_{FL7db} = ((_____ lbs.)(100)/ (100 + _____ %)) = _____ lbs.

TOTAL M_{FLdb} : 15.5649 lbs. 7.0602 kg

WEIGHT BASED COMPOSITE FUEL LOAD MOISTURE CALCULATIONS

Pc #	Wet Weight (lbs.)		Piece Average (% Dry)		Contribution to Fuel Load Average
1	3.856	x	19.200	=	74.0352
2	3.676	x	19.900	=	73.1524
3	3.796	x	19.700	=	74.7812
4	3.550	x	20.167	=	71.5917
5	3.736	x	19.033	=	71.1085
6		x		=	
7		x		=	
8		x		=	
9		x		=	
TOTALS	18.614 (A)				364.6690 (B)

Fuel Burnt

_____ lbs. (DB)

_____ kg (DB)

Dry Burn Rate (DBR):

(dkg/Time)60 =

(_____/ _____)60=

_____ kg/h (DBR)

FUEL LOAD COMPOSITE AVG. MOISTURE(% DB): 19.5911 (B+A)

FUEL LOAD COMPSITE AVG. MOISTURE (% WB): 16.3817

Note: The individual moisture readings for each cord wood fuel piece were corrected for temperature and species prior to a piece average %DB being calculated on the Cordwood Piece Data Sheet.

MYREN CONSULTING, INC. Fuel Load # 4 [redacted]

UNIT: Kuma 251 Series
RUN: Fuel Load # 4 Fire #
DATE: 12/6/02
TECHNICIANS: ATM ESS

Rev 3 2.2.21

WEIGHT OF THE TEST FUEL LOAD, DRY BASIS (M_{FLdb})

EQN 1: $M_{FLdb} = \Sigma((M_{FLnwb})(100)/(100+MC_{FLndb}))$

M_{FL1db} = ((3.790 lbs.)(100)/ (100 + 20.567 %)) = 3.1435 lbs.

M_{FL2db} = ((3.434 lbs.)(100)/ (100 + 22.433 %)) = 2.8048 lbs.

M_{FL3db} = ((3.898 lbs.)(100)/ (100 + 20.633 %)) = 3.2313 lbs.

M_{FL4db} = ((3.620 lbs.)(100)/ (100 + 20.000 %)) = 3.0167 lbs.

M_{FL5db} = ((3.496 lbs.)(100)/ (100 + 19.033 %)) = 2.9370 lbs.

M_{FL6db} = ((____ lbs.)(100)/ (100 + ____ %)) = ____ lbs.

M_{FL7db} = ((____ lbs.)(100)/ (100 + ____ %)) = ____ lbs.

TOTAL M_{FLdb} : 15.1332 lbs. 6.8644 kg

WEIGHT BASED COMPOSITE FUEL LOAD MOISTURE CALCULATIONS

Pc #	Wet Weight (lbs.)		Piece Average (% Dry)		Contribution to Fuel Load Average
1	3.790	x	20.567	=	77.9477
2	3.434	x	22.433	=	77.0361
3	3.898	x	20.633	=	80.4287
4	3.620	x	20.000	=	72.4000
5	3.496	x	19.033	=	66.5394
6		x		=	
7		x		=	
8		x		=	
9		x		=	
TOTALS	18.238 (A)				374.3518 (B)

Fuel Burnt

_____ lbs. (DB)

_____ kg (DB)

Dry Burn Rate (DBR):

(dkg/Time) 60 =

(_____/ _____) 60=

_____ kg/h (DBR)

FUEL LOAD COMPOSITE AVG. MOISTURE (% DB): 20.5259 (B+A)

FUEL LOAD COMPSITE AVG. MOISTURE (% WB): 17.0803

Note: The individual moisture readings for each cord wood fuel piece were corrected for temperature and species prior to a piece average %DB being calculated on the Cordwood Piece Data Sheet.

MYREN CONSULTING, INC. Fuel Load #5 EOW

UNIT: Kuma 251 Series
RUN: Aging - 5th Fuel Load
DATE: 12/6/2022
TECHNICIANS: ATM ES

Rev 3 2.2.21

WEIGHT OF THE TEST FUEL LOAD, DRY BASIS (M_{FLdb})

EQN 1: $M_{FLdb} = \Sigma((M_{FLnwb})(100)/(100+MC_{FLndb}))$

M_{FL1db} = ((3.564 lbs.)(100)/ (100 + 19.700 %)) = 2.9774 lbs.

M_{FL2db} = ((3.752 lbs.)(100)/ (100 + 20.467 %)) = 3.1145 lbs.

M_{FL3db} = ((3.698 lbs.)(100)/ (100 + 21.767 %)) = 3.0369 lbs.

M_{FL4db} = ((3.946 lbs.)(100)/ (100 + 21.933 %)) = 3.2362 lbs.

M_{FL5db} = ((3.714 lbs.)(100)/ (100 + 20.833 %)) = 3.0737 lbs.

M_{FL6db} = ((lbs.)(100)/ (100 + %)) = lbs.

M_{FL7db} = ((lbs.)(100)/ (100 + %)) = lbs.

TOTAL M_{FLdb} : 15.4387 lbs. 7.0029 kg

WEIGHT BASED COMPOSITE FUEL LOAD MOISTURE CALCULATIONS

240 min = 1751 kg

Pc #	Wet Weight (lbs.)		Piece Average (% Dry)		Contribution to Fuel Load Average
1	3.564	X	19.700	=	70.2108
2	3.752	X	20.467	=	76.7922
3	3.698	X	21.767	=	80.4944
4	3.946	X	21.933	=	86.5476
5	3.714	X	20.833	=	77.3738
6		X		=	
7		X		=	
8		X		=	
9		X		=	
TOTALS	18.674 (A)				391.4188 (B)

Fuel Burnt: 15.4387 lbs. (DB)
7.0029 kg (DB)

Dry Burn Rate (DBR):
(dkg/Time) 60 =
(7.0029/ 348) 60 =
~ 1.2074 kg/h (DBR)

FUEL LOAD COMPOSITE AVG. MOISTURE (% DB): 20.9606 (B+A)

FUEL LOAD COMPSITE AVG. MOISTURE (% WB): 17.3285

Note: The individual moisture readings for each cord wood fuel piece were corrected for temperature and species prior to a piece average %DB being calculated on the Cordwood Piece Data Sheet.

MYREN CONSULTING, INC.

Fuel Load #6

UNIT: Kamas 251 Series
RUN: Aging - 6th Fuel Load
DATE: 12/6/2022
TECHNICIANS: ATM ESS

Rev 3 2.2.21

WEIGHT OF THE TEST FUEL LOAD, DRY BASIS (M_{FLdb})

EQN 1: $M_{FLdb} = \Sigma((M_{FLnwb})(100)/(100+MC_{FLndb}))$

M_{FL1db} = ((3.758 lbs.)(100)/ (100 + 19.500 %)) = 3.1448 lbs.

M_{FL2db} = ((3.822 lbs.)(100)/ (100 + 19.567 %)) = 3.1965 lbs.

M_{FL3db} = ((3.786 lbs.)(100)/ (100 + 19.200 %)) = 3.1762 lbs.

M_{FL4db} = ((3.822 lbs.)(100)/ (100 + 19.100 %)) = 3.2091 lbs.

M_{FL5db} = ((3.832 lbs.)(100)/ (100 + 19.167 %)) = 3.2157 lbs.

M_{FL6db} = ((lbs.)(100)/ (100 + %)) = lbs.

M_{FL7db} = ((lbs.)(100)/ (100 + %)) = lbs.

TOTAL M_{FLdb} : 15.9423 lbs. 7.2314 kg

WEIGHT BASED COMPOSITE FUEL LOAD MOISTURE CALCULATIONS

240 min = 1.808

Pc #	Wet Weight (lbs.)		Piece Average (% Dry)		Contribution to Fuel Load Average
1	3.758	X	19.500	=	73.2810
2	3.822	X	19.567	=	74.7851
3	3.786	X	19.200	=	72.6912
4	3.822	X	19.100	=	73.0002
5	3.832	X	19.167	=	73.4479
6		X		=	
7		X		=	
8		X		=	
9		X		=	
TOTALS	19.020 (A)				367.2029 (B)

Fuel Burnt

_____ lbs. (DB)

_____ kg (DB)

Dry Burn Rate (DBR):

(dkg/Time)60 =

(_____/ _____)60=

_____ kg/h (DBR)

FUEL LOAD COMPOSITE AVG. MOISTURE(% DB): 19.3063 (B÷A)

FUEL LOAD COMPSITE AVG. MOISTURE (% WB): 16.1821

Note: The individual moisture readings for each cord wood fuel piece were corrected for temperature and species prior to a piece average %DB being calculated on the Cordwood Piece Data Sheet.

MYREN CONSULTING, INC.

Fuel Load #7

LOW

UNIT: Kumar 251 Series
RUN: Fire # Fuel Load #7
DATE: 12/6/22
TECHNICIANS: ATM RSS

Rev 3 2.2.21

WEIGHT OF THE TEST FUEL LOAD, DRY BASIS (M_{FLdb})

EQN 1: $M_{FLdb} = \Sigma((M_{FLnwb})(100)/(100+MC_{FLndb}))$

M_{FL1db} = ((3.674 lbs.)(100)/ (100 + 19.133 %)) = 3.0839 lbs.

M_{FL2db} = ((3.542 lbs.)(100)/ (100 + 19.133 %)) = 2.9751 lbs.

M_{FL3db} = ((3.794 lbs.)(100)/ (100 + 20.067 %)) = 3.1599 lbs.

M_{FL4db} = ((4.092 lbs.)(100)/ (100 + 20.400 %)) = 3.3987 lbs.

M_{FL5db} = ((3.596 lbs.)(100)/ (100 + 20.067 %)) = 2.9950 lbs.

M_{FL6db} = ((____ lbs.)(100)/ (100 + ____ %)) = ____ lbs.

M_{FL7db} = ((____ lbs.)(100)/ (100 + ____ %)) = ____ lbs.

TOTAL M_{FLdb} : 15.6107 lbs. 7.0810 kg

WEIGHT BASED COMPOSITE FUEL LOAD MOISTURE CALCULATIONS

Pc #	Wet Weight (lbs.)		Piece Average (% Dry)		Contribution to Fuel Load Average
1	3.674	x	19.133	=	70.2959
2	3.542	x	19.133	=	67.7703
3	3.794	x	20.067	=	76.1329
4	4.092	x	20.400	=	83.4768
5	3.596	x	20.067	=	72.1587
6		x		=	
7		x		=	
8		x		=	
9		x		=	
TOTALS	18.698 (A)				369.8356 (B)

Fuel Burnt

____ lbs. (DB)

____ kg (DB)

Dry Burn Rate (DBR):

(dkg/Time) 60 =

(____/ ____) 60=

____ kg/h (DBR)

FUEL LOAD COMPOSITE AVG. MOISTURE (% DB): 19.7794 (B+A)

FUEL LOAD COMPSITE AVG. MOISTURE (% WB): 16.5132

Note: The individual moisture readings for each cord wood fuel piece were corrected for temperature and species prior to a piece average %DB being calculated on the Cordwood Piece Data Sheet.

MYREN CONSULTING, INC.

Fuel Load #8

UNIT: Kuma 251 Series
RUN: Fire # Fuel Load #8
DATE: 12/7/22
TECHNICIANS: ATM ESS
Rev 3 2.2.21

WEIGHT OF THE TEST FUEL LOAD, DRY BASIS (M_{FLdb})

EQN 1: $M_{FLdb} = \Sigma((M_{FLnwb})(100)/(100+MC_{FLndb}))$

M_{FL1db} = ((3.544 lbs.)(100)/ (100 + 19.967 %)) = 2.9542 lbs.

M_{FL2db} = ((3.472 lbs.)(100)/ (100 + 19.433 %)) = 2.9071 lbs.

M_{FL3db} = ((4.220 lbs.)(100)/ (100 + 20.400 %)) = 3.5050 lbs.

M_{FL4db} = ((3.876 lbs.)(100)/ (100 + 19.367 %)) = 3.2471 lbs.

M_{FL5db} = ((3.764 lbs.)(100)/ (100 + 19.067 %)) = 3.1613 lbs.

M_{FL6db} = ((lbs.)(100)/ (100 + %)) = lbs.

M_{FL7db} = ((lbs.)(100)/ (100 + %)) = lbs.

TOTAL M_{FLdb} : 15.7746 lbs. 7.1553 kg

WEIGHT BASED COMPOSITE FUEL LOAD MOISTURE CALCULATIONS

Pc #	Wet Weight (lbs.)		Piece Average (% Dry)		Contribution to Fuel Load Average
1	3.544	x	19.967	=	70.7619
2	3.472	x	19.433	=	67.4725
3	4.220	x	20.400	=	86.0880
4	3.876	x	19.367	=	75.0652
5	3.764	x	19.067	=	71.7669
6		x		=	
7		x		=	
8		x		=	
9		x		=	
TOTALS	18.876 (A)				371.1545 (B)

Fuel Burnt

_____ lbs. (DB)

_____ kg (DB)

Dry Burn Rate (DBR):

(dkg/Time) 60 =

(/)60=

_____ kg/h (DBR)

FUEL LOAD COMPOSITE AVG. MOISTURE(% DB): 19.6628 (B+A)

FUEL LOAD COMPSITE AVG. MOISTURE (% WB): 16.4318

Note: The individual moisture readings for each cord wood fuel piece were corrected for temperature and species prior to a piece average %DB being calculated on the Cordwood Piece Data Sheet.

MYREN CONSULTING, INC. Fuel Loads #9

UNIT: Kuma 251 Series
RUN: Fuel Loads #9 Fall
DATE: 12/7/22
TECHNICIANS: ATM ESS

Rev 3 2.2.21

WEIGHT OF THE TEST FUEL LOAD, DRY BASIS (M_{FLdb})

EQN 1: $M_{FLdb} = \Sigma((M_{FLnwb})(100)/(100+MC_{FLndb}))$

M_{FL1db} = ((3.842 lbs.)(100)/ (100 + 19.467 %)) = 3.2160 lbs.

M_{FL2db} = ((3.408 lbs.)(100)/ (100 + 19.633 %)) = 2.8487 lbs.

M_{FL3db} = ((3.414 lbs.)(100)/ (100 + 19.033 %)) = 2.8681 lbs.

M_{FL4db} = ((3.556 lbs.)(100)/ (100 + 19.633 %)) = 2.9724 lbs.

M_{FL5db} = ((3.760 lbs.)(100)/ (100 + 19.100 %)) = 3.1570 lbs.

M_{FL6db} = ((lbs.)(100)/ (100 + %)) = lbs.

M_{FL7db} = ((lbs.)(100)/ (100 + %)) = lbs.

TOTAL M_{FLdb} : 15.0622 lbs. 6.8322 kg

WEIGHT BASED COMPOSITE FUEL LOAD MOISTURE CALCULATIONS

Pc #	Wet Weight (lbs.)		Piece Average (% Dry)		Contribution to Fuel Load Average
1	3.842	x	19.467	=	74.7909
2	3.408	x	19.633	=	66.9104
3	3.414	x	19.033	=	64.9798
4	3.556	x	19.633	=	69.8161
5	3.760	x	19.100	=	71.8160
6		x		=	
7		x		=	
8		x		=	
9		x		=	
TOTALS	17.980 (A)				348.3133 (B)

Fuel Burnt

_____ lbs. (DB)

_____ kg (DB)

Dry Burn Rate (DBR):

(dkg/Time)60 =

(_____/ _____)60=

_____ kg/h (DBR)

FUEL LOAD COMPOSITE AVG. MOISTURE(% DB): 19.3723 (B÷A)

FUEL LOAD COMPSITE AVG. MOISTURE (% WB): 16.2284

Note: The individual moisture readings for each cord wood fuel piece were corrected for temperature and species prior to a piece average %DB being calculated on the Cordwood Piece Data Sheet.

MYREN CONSULTING, INC.

Fuel Load #10

UNIT: Kuma 251 Series
RUN: Fuel Load #10 Fuel #
DATE: 12/8/22
TECHNICIANS: ATM ESS

Rev 3 2.2.21

WEIGHT OF THE TEST FUEL LOAD, DRY BASIS (M_{FLdb})

EQN 1: $M_{FLdb} = \Sigma((M_{FLnwb})(100)/(100+MC_{FLndb}))$

M_{FL1db} = ((4.506 lbs.)(100)/ (100 + 20.767 %)) = 3.7312 lbs.

M_{FL2db} = ((3.776 lbs.)(100)/ (100 + 19.267 %)) = 3.1660 lbs.

M_{FL3db} = ((4.040 lbs.)(100)/ (100 + 20.333 %)) = 3.3573 lbs.

M_{FL4db} = ((2.814 lbs.)(100)/ (100 + 19.167 %)) = 2.3614 lbs.

M_{FL5db} = ((3.938 lbs.)(100)/ (100 + 19.033 %)) = 3.3083 lbs.

M_{FL6db} = ((lbs.)(100)/ (100 + %)) = lbs.

M_{FL7db} = ((lbs.)(100)/ (100 + %)) = lbs.

TOTAL M_{FLdb} : 15.9242 lbs. 7.2232 kg

WEIGHT BASED COMPOSITE FUEL LOAD MOISTURE CALCULATIONS

Pc #	Wet Weight (lbs.)		Piece Average (% Dry)		Contribution to Fuel Load Average
1	4.506	x	20.767	=	93.5746
2	3.776	x	19.267	=	72.7509
3	4.040	x	20.333	=	82.1467
4	2.814	x	19.167	=	53.9350
5	3.938	x	19.033	=	74.9533
6		x		=	
7		x		=	
8		x		=	
9		x		=	
TOTALS	19.074 (A)				377.3605 (B)

Fuel Burnt

_____ lbs. (DB)

_____ kg (DB)

Dry Burn Rate (DBR):

(dkg/Time)60 =

(_____/ _____)60=

_____ kg/h (DBR)

FUEL LOAD COMPOSITE AVG. MOISTURE(% DB): 19.7840 (B+A)

FUEL LOAD COMPSITE AVG. MOISTURE (% WB): 16.5164

Note: The individual moisture readings for each cord wood fuel piece were corrected for temperature and species prior to a piece average %DB being calculated on the Cordwood Piece Data Sheet.

MYREN CONSULTING, INC.

FUEL LOAD #11

UNIT: Kuma 251 Series
RUN: Fuel Load #11 Run #
DATE: 12/13/22
TECHNICIANS: ATM ESS

Rev 3 2.2.21

WEIGHT OF THE TEST FUEL LOAD, DRY BASIS (M_{FLdb})

EQN 1: $M_{FLdb} = \Sigma((M_{FLnwb})(100)/(100+MC_{FLndb}))$

M_{FL1db} = ((3.222 lbs.)(100)/ (100 + 19.667 %)) = 2.6925 lbs.

M_{FL2db} = ((3.618 lbs.)(100)/ (100 + 19.333 %)) = 3.0318 lbs.

M_{FL3db} = ((3.950 lbs.)(100)/ (100 + 20.900 %)) = 3.2672 lbs.

M_{FL4db} = ((3.704 lbs.)(100)/ (100 + 19.233 %)) = 3.1065 lbs.

M_{FL5db} = ((3.650 lbs.)(100)/ (100 + 19.900 %)) = 3.0442 lbs.

M_{FL6db} = ((____ lbs.)(100)/ (100 + ____ %)) = ____ lbs.

M_{FL7db} = ((____ lbs.)(100)/ (100 + ____ %)) = ____ lbs.

TOTAL M_{FLdb} : 15.1422 lbs. 6.8685 kg

WEIGHT BASED COMPOSITE FUEL LOAD MOISTURE CALCULATIONS

Pc #	Wet Weight (lbs.)		Piece Average (% Dry)		Contribution to Fuel Load Average
1	3.222	x	19.667	=	63.3660
2	3.618	x	19.333	=	69.9480
3	3.950	x	20.900	=	82.5550
4	3.704	x	19.233	=	71.2408
5	3.650	x	19.900	=	72.6350
6		x		=	
7		x		=	
8		x		=	
9		x		=	
TOTALS	18.144 (A)				359.7443 (B)

Fuel Burnt

_____ lbs. (DB)

_____ kg (DB)

Dry Burn Rate (DBR):

(dkg/Time) 60 =

(_____/ _____) 60 =

_____ kg/h (DBR)

FUEL LOAD COMPOSITE AVG. MOISTURE (% DB): 19.8272 (B÷A)

FUEL LOAD COMPSITE AVG. MOISTURE (% WB): 16.5465

Note: The individual moisture readings for each cord wood fuel piece were corrected for temperature and species prior to a piece average %DB being calculated on the Cordwood Piece Data Sheet.

MYREN CONSULTING, INC.

FUEL LOAD # 12

UNIT: Kuma 251 Series
RUN: Fuel Load #12 Final
DATE: 12/6/2002
TECHNICIANS: ATM ESS

Rev 3 2.2.21

WEIGHT OF THE TEST FUEL LOAD, DRY BASIS (M_{FLdb})

EQN 1: $M_{FLdb} = \Sigma((M_{FLnwb})(100)/(100+MC_{FLndb}))$

M_{FL1db} = ((3.970 lbs.)(100)/ (100 + 19.467 %)) = 3.3231 lbs.

M_{FL2db} = ((3.758 lbs.)(100)/ (100 + 19.533 %)) = 3.1439 lbs.

M_{FL3db} = ((2.858 lbs.)(100)/ (100 + 21.633 %)) = 2.3497 lbs.

M_{FL4db} = ((2.724 lbs.)(100)/ (100 + 22.867 %)) = 2.2170 lbs.

M_{FL5db} = ((3.062 lbs.)(100)/ (100 + 23.867 %)) = 2.4720 lbs.

M_{FL6db} = ((lbs.)(100)/ (100 + %)) = lbs.

M_{FL7db} = ((lbs.)(100)/ (100 + %)) = lbs.

TOTAL M_{FLdb} : 13.5057 lbs. 6.1261 kg

WEIGHT BASED COMPOSITE FUEL LOAD MOISTURE CALCULATIONS

Pc #	Wet Weight (lbs.)		Piece Average (% Dry)		Contribution to Fuel Load Average
1	3.970	x	19.467	=	77.2817
2	3.758	x	19.533	=	73.4063
3	2.858	x	21.633	=	61.8281
4	2.724	x	22.867	=	62.2888
5	3.062	x	23.867	=	73.0797
6		x		=	
7		x		=	
8		x		=	
9		x		=	
TOTALS	16.372 (A)				347.8855 (B)

Fuel Burnt

_____ lbs. (DB)

_____ kg (DB)

Dry Burn Rate (DBR):

(dkg/Time) 60 =

(_____/ _____) 60=

_____ kg/h (DBR)

FUEL LOAD COMPOSITE AVG. MOISTURE (% DB): 21.2498 (B÷A)

FUEL LOAD COMPSITE AVG. MOISTURE (% WB): 17.5250

Note: The individual moisture readings for each cord wood fuel piece were corrected for temperature and species prior to a piece average %DB being calculated on the Cordwood Piece Data Sheet.

Fuel Moisture
Woodstove Test Data Sheet # 10

Unit: Kuma 251 Series
Run: Aging - RFD3 - Fuel Load 13
Date: 2/1/23
Technician: AT Myren
WST1- Form 7 #3 Rev 6/8/14

Room Temperature: 47 °F
Temperature Correction Factor: +2.3
Note: Record readings to the nearest 0.1% moisture
Uncorrected Values are corrected for temperature: Yes X No
Time Test Fuel Moisture Readings Taken at: 10:16
Moisture Meter: Delmhorst Model: J-2000 SN:
Calibration Checks: 12.0 12.0 MCS-1: 12.7 ±0.2 12.8 23.6 ±0.2 23.8
Key For Use: K = Kindling P = Pretest Fuel T = Test fuel S = Spacers

Ohaus Ranger Scale Check
0.000lb.: 0.000
1.0 kg: 2.204
5.0 kg: 11.

PC #	Dimen	Use	Top	Bottom	Side	Piece Avg	± Temp Cor.	Piece Avg Corrected	Wt. lbs.
1	2x4 x 17"	T	20.3	21.1	18.4		N/A	19.933	1.648
2	↓	T	21.1	19.1	18.9		↓	19.700	1.484
3	↓	T	19.3	21.4	24.0		↓	21.567	1.410
4	↓	T	20.4	21.3	21.3		↓	21.000	1.826
5	4x4 x 17"	T	19.3	22.0	21.4		↓	20.900	3.654
6	↓	T	20.0	20.9	19.1		↓	20.000	3.848
7	5"x1.5"x.75	S	19.3	21.2	19.6		↓	19.755	2.250
8	↓	↓	19.8	19.6	20.6		↓		
9	↓	↓	19.2	19.0	19.5		↓		
10	↓	↓	21.1	20.6	20.0		↓		
11	↓	↓	19.3	19.7	19.1		↓		
12	↓	↓	19.0	19.1	19.4		↓		
13	↓	↓	20.1	19.9			↓		
14					396.1				
15					19.755				
16									
17									
18									
19									
20									
21									
22									

	Kindling	Pretest Fuel	Test Load
% Moisture – Dry Basis:	%	%	%
% Moisture – Wet Basis:	%	%	%

% Moisture, wet basis = $\frac{100\ (\%\ \text{Dry Rdg.})}{100 + \%\ \text{Dry Rdg.}}$ Acceptable Ranges: 16-20% wet; 19-25% dry

MYREN CONSULTING, INC. **UNIT:** Kuma 251 Series **RUN #:** Aging RTD3
Rev. 10.3.15 Forms/Calc Forms **DATE:** 2/1/23 **TECH:** ATM ABS

ASTM 2780 EQN 1: WEIGHT OF THE TEST FUEL SPACERS, DRY BASIS (M_{Sdb})

$M_{Sdb} = \Sigma((M_{Sdb})(100)/(100 + FM_{Sdb}))$

M_{Sdb} = ((2.250 lbs.)(100)/ (100 + 19.755 %)) = 1.8788 lbs.

Wet spacer weight and average moisture content (db) are from Data Sheet 10

ASTM 2780 EQN 2: WEIGHT OF THE TEST FUEL LOAD, DRY BASIS (M_{Cdb})

$M_{Cdb} = \Sigma((_{CPnwb})(100)/(100 + FM_{CPndb}))$

M_{C1db} = ((1.648 lbs.)(100)/ (100 + 19.933 %)) = 1.3741 lbs.

M_{C2db} = ((1.484 lbs.)(100)/ (100 + 19.700 %)) = 1.2398 lbs.

M_{C3db} = ((1.410 lbs.)(100)/ (100 + 21.567 %)) = 1.1599 lbs.

M_{C4db} = ((1.826 lbs.)(100)/ (100 + 21.000 %)) = 1.5091 lbs.

M_{C5db} = ((3.654 lbs.)(100)/ (100 + 20.900 %)) = 3.0223 lbs.

M_{C6db} = ((3.848 lbs.)(100)/ (100 + 20.000 %)) = 3.2067 lbs.

TOTAL FUEL PIECE WEIGHT (M_{Cdb}): 11.5118 lbs.

ASTM 2780 EQN 3: DENSITY OF THE FUEL CRIB (D_{Cdb})

$D_{Cdb} = M_{Cdb}/V_C$

V_1 = 3.5″ x _____″ x _____″ = _____ in^3

V_2 = 3.5″ x _____″ x _____″ = _____ in^3

V_3 = 3.5″ x _____″ x _____″ = _____ in^3

V_4 = 3.5″ x _____″ x _____″ = _____ in^3

V_5 = 3.5″ x _____″ x _____″ = _____ in^3

V_6 = 3.5″ x _____″ x _____″ = _____ in^3

TOTAL FUEL LOAD VOLUME (V_C) = _____ in^3

V_C _____ in^3/ 1728 in^3/ ft^3 = _____ ft^3

D_{Cdb} = (M_{Cdb}) _____ lbs./ (V_C) _____ ft^3 = _____ lbs./ ft^3

ASTM 2780 EQN 4: TOTAL WEIGHT OF THE FUEL CRIB (M_{FTAdb})

$M_{FTAdb} = M_{Sdb} + M_{Cdb}$

TOTAL FUEL PIECE WEIGHT (M_{Cdb}): 11.5118 lbs.

+ TOTAL SPACER WEIGHT (M_{Sdb})(db): 1.8788 lbs.

TOTAL FUEL LOAD WEIGHT (M_{FTAdb})(db): 13.3906 lbs.

_____ lbs./ 2.2046 lbs./kg = 6.0740 kg.

ASTM 2780 EQN 5: DRY BURN RATE (BR)

$BR = 60(M_{FTAdb})/\theta$ [60(6.0740 kg)/ 420 min] = 0.8677 kg/h

Fuel Moisture
Woodstove Test Data Sheet # 10

Unit: Kuma 251 Series
Run: Aging RTD 4 Fuel Load 14
Date: 2/3/23
Technician: ATM & SS
WST1- Form 7 #3 Rev 6/8/14

Room Temperature: 50 °F
Temperature Correction Factor: +2.0
Note: Record readings to the nearest 0.1% moisture
Uncorrected Values are corrected for temperature: Yes X No
Time Test Fuel Moisture Readings Taken at: 1057
Moisture Meter: Delmhorst Model: J-2000 SN:
Calibration Checks: 12.0 12.0 MCS-1: 12.7 ±0.2 12.8 23.6 ±0.2 23.8
Key For Use: K = Kindling P = Pretest Fuel T = Test fuel S = Spacers

Ohaus Ranger Scale Check
0.000lb.: 0.000
1.0 kg: 2.204
5.0 kg:

PC #	Dimen	Use	Top	Bottom	Side	Piece Avg	± Temp Cor.	Piece Avg Corrected	Wt. lbs.
1	2X4 x 17"	T	19.7	18.5	18.9		N/A	19.033	1.886
2			20.2	19.1	18.7			19.333	1.676
3			19.8	21.5	21.2			20.725	1.542
4			20.7	20.9	20.7			20.767	1.600
5	4x4 x 17"	T	21.1	21.4	18.9			20.467	4.026
6			19.1	19.1	19.2			19.133	4.110
7	5"x 1.5"x .75"	S	19.6	20.1	20.3			20.025	2.194
8			20.1	19.0	19.0				
9			19.6	19.7	20.1				
10			19.8	21.2	20.3				
11			20.9	19.5	19.6				
12			21.6	22.4	19.1				
13			19.2	19.4					
14									
15				TOTAL	400.5				
16				$\bar{x}$ BDB	20.025				
17									
18									
19									
20									
21									
22									

	Kindling	Pretest Fuel	Test Load
% Moisture – Dry Basis:	%	%	%
% Moisture – Wet Basis:	%	%	%

% Moisture, wet basis = $\frac{100\ (\%\ \text{Dry Rdg.})}{100 + \%\ \text{Dry Rdg.}}$ Acceptable Ranges: 16-20% wet; 19-25% dry

Page 4 of 14

MYREN CONSULTING, INC. **UNIT:** Kuma 251 Series **RUN #:** R&D 4

Rev. 10.3.15 Forms/Calc Forms **DATE:** 2/3/23 **TECH:** ATM LSS

ASTM 2780 EQN 1: WEIGHT OF THE TEST FUEL SPACERS, DRY BASIS (M_{Sdb})

$M_{Sdb} = \Sigma((M_{Sdb})(100)/(100 + FM_{Sdb}))$

M_{Sdb} = ((2.194 lbs.)(100)/ (100 + 20.025 %)) = 1.8280 lbs.

Wet spacer weight and average moisture content (db) are from Data Sheet 10

ASTM 2780 EQN 2: WEIGHT OF THE TEST FUEL LOAD, DRY BASIS (M_{Cdb})

$M_{Cdb} = \Sigma((_{CPnwb})(100)/(100 + FM_{CPndb}))$

M_{C1db} = ((1.986 lbs.)(100)/ (100 + 19.033 %)) = 1.5844 lbs.

M_{C2db} = ((1.676 lbs.)(100)/ (100 + 19.333 %)) = 1.4045 lbs.

M_{C3db} = ((1.542 lbs.)(100)/ (100 + 20.773 %)) = 1.2768 lbs.

M_{C4db} = ((1.600 lbs.)(100)/ (100 + 20.767 %)) = 1.3249 lbs.

M_{C5db} = ((4.026 lbs.)(100)/ (100 + 20.467 %)) = 3.3420 lbs.

M_{C6db} = ((4.110 lbs.)(100)/ (100 + 19.133 %)) = 3.4499 lbs.

TOTAL FUEL PIECE WEIGHT (M_{Cdb}): 12.3825 lbs.

ASTM 2780 EQN 3: DENSITY OF THE FUEL CRIB (D_{Cdb})

$D_{Cdb} = M_{Cdb}/V_C$

V_1 = 3.5″ x ____″ x ____″ = ____ in^3

V_2 = 3.5″ x ____″ x ____″ = ____ in^3

V_3 = 3.5″ x ____″ x ____″ = ____ in^3

V_4 = 3.5″ x ____″ x ____″ = ____ in^3

V_5 = 3.5″ x ____″ x ____″ = ____ in^3

V_6 = 3.5″ x ____″ x ____″ = ____ in^3

TOTAL FUEL LOAD VOLUME (V_C) = ____ in^3

V_C ____ in^3/ 1728 in^3/ ft^3 = ____ ft^3

D_{Cdb} = (M_{Cdb}) ____ lbs./ (V_C) ____ ft^3 = ____ lbs./ ft^3

ASTM 2780 EQN 4: TOTAL WEIGHT OF THE FUEL CRIB (M_{FTAdb})

$M_{FTAdb} = M_{Sdb} + M_{Cdb}$

TOTAL FUEL PIECE WEIGHT (M_{Cdb}): 12.3825 lbs.

+ TOTAL SPACER WEIGHT (M_{Sdb})(db): 1.8280 lbs.

TOTAL FUEL LOAD WEIGHT (M_{FTAdb})(db): 14.2104 lbs.

14.2104 lbs./ 2.2046 lbs./kg = 6.4458 kg.

ASTM 2780 EQN 5: DRY BURN RATE (BR)

$BR = 60(M_{FTAdb})/\theta$ [60(6.4458 kg)/ 375 min] = 0.9791 kg/h

Fuel Moisture
Woodstove Test Data Sheet # 10

Unit: Kuma 251 Series
Run: Aging RD 6 Fuel load 1
Date: 2/8/23
Technician: AJM ESS
WST1- Form 7 #3 Rev 6/8/14

Room Temperature: 52 °F
Temperature Correction Factor: + 1.8
Note: Record readings to the nearest 0.1% moisture
Uncorrected Values are corrected for temperature: Yes X No
Time Test Fuel Moisture Readings Taken at: 1049
Moisture Meter: Delmhorst Model: J-2000 SN:
Calibration Checks: 12.0 12.0 MCS-1: 12.7 ±0.2 12.8 23.6 ±0.2 23.8
Key For Use: K = Kindling P = Pretest Fuel T = Test fuel S = Spacers

Ohaus Ranger Scale Check
0.000lb.: 0.000
1.0 kg: 2.204
5.0 kg:

PC #	Dimen	Use	Top	Bottom	Side	Piece Avg	± Temp Cor.	Piece Avg Corrected	Wt. lbs.
1	2X4X 17.0"	T	20.1	20.5	20.2		N/A	20.267	1.808
2			18.2	20.7	18.9			19.267	1.700
3			19.0	19.7	21.1			19.933	1.870
4			20.9	20.6	20.1			20.533	1.940
5	4X4 X 17.0"	T	21.5	23.15	21.0			22.000	4.200
6			19.4	19.9	18.4			19.233	3.464
7	5" x 1.5" x .75	T	19.3	19.6	19.8		X	20.08	2.100
8			19.9	20.0	19.1				
9			19.6	21.1	20.9				
10			19.4	19.3	19.3				
11			20.1	21.1	21.3				
12			20.6	20.8	20.4				
13			19.9	20.1					
14				Total	401.6				
15				Avg %DB	20.080				
16									
17									
18									
19									
20									
21									
22									

	Kindling	Pretest Fuel	Test Load
% Moisture – Dry Basis:	%	%	%
% Moisture – Wet Basis:	%	%	%

% Moisture, wet basis = $\frac{100\ (\%\ \text{Dry Rdg.})}{100 + \%\ \text{Dry Rdg.}}$

Acceptable Ranges: 16-20% wet; 19-25% dry

MYREN CONSULTING, INC. **UNIT:** Kuma 251 Series **RUN #:** Aging R#0 C
Rev. 10.3.15 Forms/Calc Forms **DATE:** 2/8/23 **TECH:** ATM EGS

ASTM 2780 EQN 1: WEIGHT OF THE TEST FUEL SPACERS, DRY BASIS (M_{Sdb})

$M_{Sdb} = \Sigma((M_{Sdb})(100)/(100 + FM_{Sdb}))$

M_{Sdb} = ((2.100 lbs.)(100)/ (100 + 20.080 %)) = 1.7488 lbs.

Wet spacer weight and average moisture content (db) are from Data Sheet 10

ASTM 2780 EQN 2: WEIGHT OF THE TEST FUEL LOAD, DRY BASIS (M_{Cdb})

$M_{Cdb} = \Sigma((_{CPnwb})(100)/(100 + FM_{CPndb}))$

M_{C1db} = ((1.808 lbs.)(100)/ (100 + 20.267 %)) = 1.5033 lbs.

M_{C2db} = ((1.700 lbs.)(100)/ (100 + 19.267 %)) = 1.4254 lbs.

M_{C3db} = ((1.870 lbs.)(100)/ (100 + 19.333 %)) = 1.5592 lbs.

M_{C4db} = ((1.940 lbs.)(100)/ (100 + 20.533 %)) = 1.6095 lbs.

M_{C5db} = ((4.200 lbs.)(100)/ (100 + 22.000 %)) = 3.4426 lbs.

M_{C6db} = ((3.464 lbs.)(100)/ (100 + 19.233 %)) = 2.9052 lbs.

TOTAL FUEL PIECE WEIGHT (M_{Cdb}): 12.4453 lbs.

ASTM 2780 EQN 3: DENSITY OF THE FUEL CRIB (D_{Cdb})

$D_{Cdb} = M_{Cdb}/V_C$

V_1 = 3.5″ x _____″ x _____″ = _____ in^3

V_2 = 3.5″ x _____″ x _____″ = _____ in^3

V_3 = 3.5″ x _____″ x _____″ = _____ in^3

V_4 = 3.5″ x _____″ x _____″ = _____ in^3

V_5 = 3.5″ x _____″ x _____″ = _____ in^3

V_6 = 3.5″ x _____″ x _____″ = _____ in^3

TOTAL FUEL LOAD VOLUME (V_C) = _____ in^3

V_C _____ in^3/ 1728 in^3/ ft^3 = _____ ft^3

D_{Cdb} = (M_{Cdb}) _____ lbs./ (V_C) _____ ft^3 = _____ lbs./ ft^3

ASTM 2780 EQN 4: TOTAL WEIGHT OF THE FUEL CRIB (M_{FTAdb})

$M_{FTAdb} = M_{Sdb} + M_{Cdb}$

TOTAL FUEL PIECE WEIGHT (M_{Cdb}): 12.4453 lbs.

+ TOTAL SPACER WEIGHT (M_{Sdb})(db): 1.7488 lbs.

TOTAL FUEL LOAD WEIGHT (M_{FTAdb})(db): 14.1941 lbs.

14.1941 lbs./ 2.2046 lbs./kg = 6.4384 kg.

ASTM 2780 EQN 5: DRY BURN RATE (BR)

$BR = 60(M_{FTAdb})/\theta$ [60(6.4384 kg)/ 375 min] = 1.0301 kg/h

Fuel Moisture
Woodstove Test Data Sheet # 10

Unit: Kuma 250 Series Fuel Loads 17
Run: Aging - RFO 7
Date: 2/18/23
Technician: ATM ESS
WST1- Form 7 #3 Rev 6/8/14

Room Temperature: 48 °F
Temperature Correction Factor: 2.2
Note: Record readings to the nearest 0.1% moisture
Uncorrected Values are corrected for temperature: Yes X No
Time Test Fuel Moisture Readings Taken at:
Moisture Meter: Delmhorst Model: J-2000 SN:
Calibration Checks: 12.0 12.0 MCS-1: 12.7 ±0.2 12.8 23.6 ±0.2 23.8
Key For Use: K = Kindling P = Pretest Fuel T = Test fuel S = Spacers

Ohaus Ranger Scale Check
0.000lb.: 0.000
1.0 kg: 2.204
5.0 kg:

PC #	Dimen	Use	Top	Bottom	Side	Piece Avg	± Temp Cor.	Piece Avg Corrected	Wt. lbs.
1	2X4X17"	T	18.7	20.6	21.1		N/A		1.876
2	↓	↓	20.8	20.4	20.9		↓		1.458
3	↓	↓	21.8	21.0	21.7		↓		1.900
4	↓	↓	19.9	20.8	21.7		↓		1.648
5	4x4x17"	T	17.9	21.3	21.2		↓		3.802
6	↓	↓	19.5	21.0	20.9		↓		4.576
7	5"x1.5x.75	S	19.4	20.1	20.6		↓	19.930	2.170
8			19.6	19.1	19.2		↓		
9			19.4	19.8	21.6		↓		
10			19.0	19.1	19.2		↓		
11			19.7	20.6	20.9		↓		
12			19.8	20.4	20.6		↓		
13			19.3	21.2			↓		
14									
15				TOTAL	398.6				
16				X DSB	19.930				
17									
18									
19									
20									
21									
22									

	Kindling	Pretest Fuel	Test Load
% Moisture – Dry Basis:	%	%	%
% Moisture – Wet Basis:	%	%	%

% Moisture, wet basis = $\frac{100\ (\%\ \text{Dry Rdg.})}{100 + \%\ \text{Dry Rdg.}}$

Acceptable Ranges: 16-20% wet; 19-25% dry

14-7

MYREN CONSULTING, INC. **UNIT:** Kuma 250 Series **RUN #:** Again Run 1
Rev. 10.3.15 Forms/Calc Forms **DATE:** 2/18/23 **TECH:** ATM ESS

ASTM 2780 EQN 1: WEIGHT OF THE TEST FUEL SPACERS, DRY BASIS (M_{Sdb})

$M_{Sdb} = \Sigma((M_{Sdb})(100)/(100 + FM_{Sdb}))$

M_{Sdb} = ((2.170 lbs.)(100)/ (100 + 19.930 %)) = 1.8094 lbs.

Wet spacer weight and average moisture content (db) are from Data Sheet 10

ASTM 2780 EQN 2: WEIGHT OF THE TEST FUEL LOAD, DRY BASIS (M_{Cdb})

$M_{Cdb} = \Sigma((_{CPnwb})(100)/(100 + FM_{CPndb}))$

M_{C1db} = ((1.876 lbs.)(100)/ (100 + 20.133 %)) = 1.5616 lbs.

M_{C2db} = ((1.458 lbs.)(100)/ (100 + 20.700 %)) = 1.2080 lbs.

M_{C3db} = ((1.900 lbs.)(100)/ (100 + 21.500 %)) = 1.5638 lbs.

M_{C4db} = ((1.648 lbs.)(100)/ (100 + 20.800 %)) = 1.3642 lbs.

M_{C5db} = ((3.802 lbs.)(100)/ (100 + 20.133 %)) = 3.1648 lbs.

M_{C6db} = ((4.398 lbs.)(100)/ (100 + 20.467 %)) = 3.6508 lbs.

TOTAL FUEL PIECE WEIGHT (M_{Cdb}): 12.5132 lbs.

ASTM 2780 EQN 3: DENSITY OF THE FUEL CRIB (D_{Cdb})

$D_{Cdb} = M_{Cdb}/V_C$

V_1 = 3.5″ x _____″ x _____″ = _____ in^3

V_2 = 3.5″ x _____″ x _____″ = _____ in^3

V_3 = 3.5″ x _____″ x _____″ = _____ in^3

V_4 = 3.5″ x _____″ x _____″ = _____ in^3

V_5 = 3.5″ x _____″ x _____″ = _____ in^3

V_6 = 3.5″ x _____″ x _____″ = _____ in^3

TOTAL FUEL LOAD VOLUME (V_C) = _____ in^3

V_C _____ in^3/ 1728 in^3/ ft^3 = _____ ft^3

D_{Cdb} = (M_{Cdb}) _____ lbs./ (V_C) _____ ft^3 = _____ lbs./ ft^3

ASTM 2780 EQN 4: TOTAL WEIGHT OF THE FUEL CRIB (M_{FTAdb})

$M_{FTAdb} = M_{Sdb} + M_{Cdb}$

TOTAL FUEL PIECE WEIGHT (M_{Cdb}): 12.5132 lbs.

+ TOTAL SPACER WEIGHT (M_{Sdb})(db): 1.8094 lbs.

TOTAL FUEL LOAD WEIGHT (M_{FTAdb})(db): 14.3226 lbs.

14.3226 lbs./ 2.2046 lbs./kg = 6.4967 kg.

ASTM 2780 EQN 5: DRY BURN RATE (BR)

$BR = 60(M_{FTAdb})/\theta$ [60(6.4967 kg)/ 305 min] = 1.2780 kg/h

Run 1

High Burn (Category IV)

Wood Heater Preburn Data - ASTM E2780

Run: 1

Technician Signature

Manufacturer: Kuma Stoves
Model: K-251
Tracking No.: 2464
Project No.: 0123WM014E
Test Date: 4/12/23
Beginning Clock Time: 10:43

Preburn Fuel Data

4 pieces @ 12 inches
3 pieces @ 16 inches
pieces @ inches

Fuel Moisture Readings (% DB):

21.0	22.1	22.8	20.1	22.6	24.5	23.8

Avg Preburn Moisture (% DB): **22.41**

Coal Bed Range (lb):	**3.4** (min)	**4.3** (max)

			Temperatures (°F)								
Elapsed Time (min)	Scale (lb)	Stack Draft (in H_2O)	FB Top	FB Bottom	FB Back	FB Left	FB Right	Cat Exit	Avg. FB	Stack	Ambient
0	12.9	-0.052	488	460	465	496	486	3218	479	317	61
1	12.8	-0.049	475	458	460	491	482	3218	473.3	303	60
2	12.7	-0.052	466	455	456	485	478	3218	467.9	318	60
3	12.7	-0.052	458	453	451	479	473	3218	462.7	328	60
4	12.6	-0.052	452	450	446	473	468	3218	457.7	333	60
5	12.6	-0.053	446	448	441	466	463	3218	452.7	337	60
6	12.5	-0.052	441	445	436	460	457	3218	447.9	341	60
7	12.5	-0.053	438	442	430	454	451	3218	443.2	343	59
8	12.4	-0.054	425	440	393	448	444	3218	429.9	346	60
9	12.4	-0.054	410	437	367	442	437	3218	418.8	344	59
10	12.4	-0.054	398	435	352	437	432	3218	410.8	341	60
11	12.3	-0.053	389	432	336	432	427	3218	403.3	339	60
12	12.3	-0.053	381	430	329	427	421	3218	397.6	337	59
13	12.2	-0.053	374	427	320	422	416	3218	391.9	336	59
14	12.2	-0.053	367	424	311	417	411	3218	386.2	333	59
15	12.1	-0.053	360	422	304	413	407	3218	381	330	59
16	12.1	-0.053	353	419	299	409	402	3218	376.4	327	60
17	12	-0.053	348	416	290	404	398	3218	371.1	326	59
18	12	-0.063	341	414	288	401	394	3218	367.4	370	59
19	11.6	-0.082	355	415	283	398	390	3218	368.1	538	58
20	11.4	-0.067	385	412	281	396	388	3218	372.4	471	59
21	11.3	-0.064	394	409	277	397	386	3218	372.5	432	58
22	11.2	-0.063	397	405	275	397	384	3218	371.7	411	59
23	11.2	-0.061	397	402	271	397	382	3218	369.6	396	58
24	11.1	-0.06	395	399	270	395	380	3218	368	385	59
25	11	-0.06	392	396	265	393	378	3218	364.9	377	58
26	10.9	-0.053	383	395	259	391	376	3218	360.9	383	59
27	10.8	-0.06	379	392	256	389	374	3218	358.1	372	59
28	10.7	-0.062	390	389	253	387	372	3218	358.2	391	59
29	10.5	-0.063	403	386	252	385	371	3218	359.3	404	59
30	10.4	-0.064	414	384	250	385	370	3218	360.7	413	59
31	10.2	-0.065	426	381	247	385	370	3218	361.9	420	59
32	10.1	-0.065	438	379	246	386	371	3218	363.9	425	59
33	10	-0.065	449	377	247	386	372	3218	366.2	429	59
34	9.8	-0.065	461	374	242	387	374	3218	367.6	435	59
35	9.6	-0.067	476	372	245	387	376	3218	371.3	442	59
36	9.5	-0.067	490	370	245	389	377	3218	374.5	446	59
37	9.3	-0.067	503	368	246	391	379	3218	377.4	449	59
38	9.1	-0.067	514	366	248	393	380	3218	380.4	450	58
39	9	-0.067	524	364	251	396	382	3218	383.5	452	59
40	8.8	-0.068	535	362	252	399	383	3218	386.6	456	59
41	8.6	-0.068	547	361	256	404	385	3218	390.5	460	59
42	8.5	-0.069	559	359	258	408	387	3218	394.2	464	59
43	8.3	-0.068	569	357	262	412	390	3218	397.9	466	59

Wood Heater Preburn Data - ASTM E2780

Run: 1

Technician Signature

Manufacturer: Kuma Stoves
Model: K-251
Tracking No.: 2464
Project No.: 0123WM014E
Test Date: 4/12/23
Beginning Clock Time: 10:43

Preburn Fuel Data

4 pieces @ 12 inches
3 pieces @ 16 inches
_____ pieces @ _____ inches

Fuel Moisture Readings (% DB):

21.0	22.1	22.8	20.1	22.6	24.5	23.8

Avg Preburn Moisture (% DB): **22.41**

Coal Bed Range (lb):	**3.4** (min)	**4.3** (max)

			Temperatures (°F)								
Elapsed Time (min)	Scale (lb)	Stack Draft (in H_2O)	FB Top	FB Bottom	FB Back	FB Left	FB Right	Cat Exit	Avg. FB	Stack	Ambient
44	8.1	-0.069	578	355	264	416	392	3218	400.9	467	59
45	8	-0.068	585	354	266	419	394	3218	403.6	467	59
46	7.8	-0.069	592	352	269	423	397	3218	406.6	468	59
47	7.6	-0.068	600	351	273	426	399	3218	409.7	470	59
48	7.5	-0.069	607	349	275	430	401	3218	412.4	472	59
49	7.3	-0.07	613	348	278	434	404	3218	415.2	474	59
50	7.1	-0.069	619	346	281	438	407	3218	418.4	476	59
51	6.9	-0.069	626	345	285	443	410	3218	421.6	478	59
52	6.8	-0.07	631	344	287	448	413	3218	424.4	477	59
53	6.6	-0.07	635	342	291	454	416	3218	427.5	478	59
54	6.4	-0.07	639	341	292	459	420	3218	430.4	478	59
55	6.2	-0.07	643	340	297	465	423	3218	433.5	479	60
56	6.1	-0.07	646	339	300	471	427	3218	436.4	479	60
57	5.9	-0.069	649	338	302	476	431	3218	439.1	479	59
58	5.7	-0.069	651	337	306	482	435	3218	442.2	478	60
59	5.6	-0.069	654	336	311	487	439	3218	445.4	479	60
60	5.4	-0.069	654	335	315	493	443	3218	448	477	60
61	5.3	-0.068	652	334	320	498	447	3218	450.4	473	60
62	5.2	-0.068	650	333	322	503	451	3218	451.7	470	60
63	5	-0.067	646	333	326	508	454	3218	453.5	467	59
64	4.9	-0.067	642	332	328	512	458	3218	454.5	464	59
65	4.8	-0.067	636	332	331	516	462	3218	455.3	459	60
66	4.7	-0.066	630	331	337	520	465	3218	456.8	457	60
67	4.6	-0.066	625	330	343	524	468	3218	458	453	60
68	4.5	-0.065	618	330	344	526	472	3218	458	449	60
69	4.4	-0.064	609	330	349	529	475	3218	458.2	441	60
70	4.3	-0.063	599	329	351	531	479	3218	457.8	434	60
71	4.3	-0.063	589	329	355	534	481	3218	457.6	428	59
72	4.2	-0.062	579	329	355	535	485	3218	456.5	423	60
73	4.1	-0.061	570	328	357	537	487	3218	455.9	418	59
74	4.1	-0.061	560	328	356	538	491	3218	454.8	415	59
75	4	-0.06	552	328	359	540	494	3218	454.5	411	60
76	4	-0.06	543	328	358	541	496	3218	453.4	407	60
77	3.9	-0.06	535	328	359	542	499	3218	452.6	405	59
78	3.9	-0.059	527	328	361	542	501	3218	452.1	401	59
79	3.8	-0.059	520	328	360	543	504	3218	450.9	398	60
80	3.8	-0.058	513	328	360	543	505	3218	450	395	60
81	3.7	-0.058	507	329	361	543	507	3218	449.2	392	60

Wood Heater Test Fuel Data - ASTM E2780

Manufacturer :	Kuma Stoves
Model :	K-251
Tracking No. :	2464
Project No. :	0123WM014E
Test Date :	4/12/2023
Run No. :	1

Moisture Meter Cal	
Cal Block	Measured
12.0	12.0
22.0	22.0

Firebox Volume :	2.56	ft3
% 2 x 4 Required :	35 - 65	%
Ideal Fuel Weight :	17.92	lb.
Minimum Fuel Weight :	16.13	lb.
Maximum Fuel Weight :	19.71	lb.

Fuel Piece Data

PC #	Weight, lb	Size	Length, In	Moisture Readings, Dry Basis %			Average MC, % db	Dry Weight, lb.	Volume, ft3	Wet Weights, lb 4 x 4	Wet Weights, lb 2 x 4	Dry Weights, lb 4 x 4	Dry Weights, lb 2 x 4
1	1.60	2x4	17.25	21.9	20.4	20.6	21.0	1.32	0.0524		1.6		1.32
2	1.70	2x4	17.25	22.1	21.9	22.1	22.0	1.39	0.0524		1.7		1.39
3	1.70	2x4	17.25	21.4	23.8	24.2	23.1	1.38	0.0524		1.7		1.38
4	1.70	2x4	17.25	20.4	21.1	23.4	21.6	1.40	0.0524		1.7		1.40
5	3.90	4x4	17.25	24.7	24.5	23.1	24.1	3.14	0.1223	3.9		3.14	
6	4.30	4x4	17.25	23.8	23.4	22.7	23.3	3.49	0.1223	4.3		3.49	
7													
8													
9													

Spacer Data

Moisture Readings, Dry Basis % (One reading per spacer)								
10.9	18.0	12.4	12.5	13.7	15.9	11.4	11.4	
12.4	12.4	12.8	12.1	12.8	16.8	12.0	12.1	
11.6	13.5	12.8	13.2					

Avg : 13.0

Assembled Crib Fuel Load with Spacers Attatched

PC #	Weight, lb with Spacers	Size	4 x 4s	2 x 4s
1	2.10	2x4		2.1000
2	2.20	2x4		2.2000
3	2.20	2x4		2.2000
4	2.20	2x4		2.2000
5	4.00	4x4	4.00	
6	4.50	4x4	4.50	
7				
8				
9				

Combined Mass of 4 x 4s	8.5	lb
Combined Mass of 2 x 4s	8.7	lb
Total Wet Mass of Fuel Load	**17.2**	lb

Fuel Load Properties

Type	*Number of Pieces*	*Wet Weight, lb.*	*Dry Weight, lb.*	*Fuel Loading Density, lb/ft³* Wet Basis	*Fuel Loading Density, lb/ft³* Dry Basis	Dry Fuel Density, lb/ft³	Wet Fuel Density, lb/ft³	*Moisture, %* Dry Basis	*Moisture, %* Wet Basis
2 x 4	4	6.7	5.49	6.72	5.53	26.69	32.80	21.48	17.68
4 x 4	2	8.2	6.63						
Spacers	20	2.3	2.03						
Totals		17.2	14.16						

Compliance Checks

	Fuel Load, Wet Lb.	Load Density, lb/ft³ of FB vol	Fuel Density, lb/ft³	% of Fuel load mass which is 2x4	Fuel Load Peices Mositure, % db
Measured	17.2	6.72	26.69	51	22.5
Required	16.1 - 19.7	6.3 - 7.7	25 - 36	35 - 65	19 -25
Complies ?	Yes	Yes	Yes	Yes	Yes

Wood Heater Test Data

u

Run: 1

Manufacturer: Kuma Stoves
Model: K-251
Tracking No.: 2464
Project No.: 0123WM014E
Test Date: 12-Apr-23
Beginning Clock Time: 12:04

Total Sampling Time: 177 min
Recording Interval: 1 min
Tunnel Diameter: 6
Background Sample Volume: 39.258 cubic feet

PM Control Modules: 335, 336
Dilution Tunnel MW(dry): 29.00 lb/lb-mole
Dilution Tunnel MW(wet): 28.78 lb/lb-mole
Dilution Tunnel H2O: 2.00 percent
Dilution Tunnel Static: -0.320 "H2O
Tunnel Area: 0.19635 ft2
Pitot Tube Cp: 0.99

Avg. Tunnel Velocity: 18.58 ft/sec.
Initial Tunnel Flow: 211.7 scfm
Average Tunnel Flow: 208.3 scfm
Post-Test Leak Check (1st Hr): 0.000 cfm @ 17 in. Hg
Post-Test Leak Check (1): 0.000 cfm @ 17 in. Hg
Post-Test Leak Check (2): 0.000 cfm @ 17 in. Hg
Average Test Piece Fuel Moisture: 21.48 Dry Basis %

Technician Signature:_____

Meter Box Y Factor: 1.004 (1) 1.002 (2) 1.012 (Amb)

Export to PDF

Barometric Pressure:	Begin	Middle	End	Average
	30.11	30.11	30.11	30.11

Room Air Velocity, fpn
<50

OMNI Equipment Numbers: _____

Velocity Traverse Data

	Pt.1	Pt.2	Pt.3	Pt.4	Pt.5	Pt.6	Pt.7	Pt.8	Center	
Initial dP	0.072	0.090	0.090	0.068	0.072	0.088	0.086	0.064	0.099	"H2O
Temp:	84	84	84	84	84	84	84	84	84	°F

V_{strav} 18.79 ft/sec V_{scent} 21.11 ft/sec F_p 0.890

qwq

	Particulate Sampling Data														Fuel Weight (lb)		Temperature Data (°F)													Stack Gas Data		
Elapsed Time (min)	Gas Meter 1 (ft^3)	Gas Meter 2 (ft^3)	Sample Rate 1 (cfm)	Sample Rate 2 (cfm)	Orifice dH 1 ("H_2O)	Meter 1 Temp (°F)	Meter 1 Vacuum ("Hg)	Orifice dH 2 ("H_2O)	Meter 2 Temp (°F)	Meter 2 Vacuum ("Hg)	Dilution Tunnel (°F)	Dilution Tunnel Center dP	Pro. Rate 1	Pro. Rate 2	Scale Reading	Weight Change	Firebox Top	Firebox Bottom	Firebox Back	Firebox Left	Firebox Right	Avg. Stove Surface (Tot = ΔT)	Catalyst Exit	Stack	Filter 1	Dryer Exit 1	Filter 2	Dryer Exit 2	Ambient	Draft ("H_2O)	CO_2 (%)	CO (%)
Tot / Avg	**28.37**	**28.31**	**0.16**	**0.16**	**1.29**	**70.24**	**2.98**	**1.01**	**70.95**	**2.33**	**86.87**	**0.10**	**100.00**	**99.98**		-17.2	531	323	339	493	479	**55**	981	419	65	50	64	50	60	-0.063	9	0
Minimum			0.16	0.14	1.07	63.00	2.68	0.66	64.00	1.90	78.00	0.08	96.68	90.91	0.00	-0.300	361	292	284	439	444	393	741	334	60	47	60	45	59	-0.075	6	0
Max			0.18	0.16	1.61	73.00	3.13	1.04	73.00	2.40	121.00	0.10	116.70	111.50	17.20	0.000	697	364	412	545	511	468	1266	512	67	53	66	53	62	-0.052	14	0.790
0	0.000	0.000			1.07	63	2.68	0.66	64	1.9	116	0.095			17.2		498	331	359	542	509	448	886	487	60	52	60	51	60	-0.074	6.53	0.07
1	0.164	0.136	0.16	0.14	1.61	63	3.07	0.88	64	2.1	121	0.092	109	91	17.0	-0.2	486	335	359	542	511	447	846	483	62	51	61	49	60	-0.071	8.23	0.09
2	0.341	0.284	0.18	0.15	1.60	63	3.07	0.88	64	2.1	107	0.092	117	98	16.9	-0.1	477	335	394	541	511	452	797	425	63	51	61	49	61	-0.062	6.59	0.12
3	0.506	0.443	0.17	0.16	1.33	63	2.74	1.04	64	2.3	97	0.090	109	105	16.7	-0.2	492	334	408	540	510	457	825	417	63	51	62	48	60	-0.064	7.18	0.09
4	0.666	0.602	0.16	0.16	1.31	63	2.74	1.03	64	2.3	96	0.080	112	111	16.5	-0.2	512	334	411	536	508	460	900	437	64	50	62	48	60	-0.067	9.65	0.10
5	0.825	0.761	0.16	0.16	1.32	64	2.75	1.03	64	2.3	95	0.092	104	104	16.3	-0.2	542	334	412	531	505	465	992	459	64	50	63	48	60	-0.068	12.22	0.09
6	0.985	0.921	0.16	0.16	1.31	64	2.74	1.02	64	2.3	95	0.093	104	104	16.1	-0.2	566	334	412	527	502	468	1038	471	64	50	63	47	60	-0.069	11.28	0.03
7	1.146	1.080	0.16	0.16	1.31	64	2.74	1.02	64	2.3	94	0.095	103	102	16.0	-0.1	571	334	381	521	498	461	1057	475	64	49	63	47	60	-0.070	10.65	0.10
8	1.305	1.239	0.16	0.16	1.30	64	2.74	1.02	65	2.3	93	0.093	103	103	15.8	-0.2	576	334	361	516	493	456	1083	479	65	49	63	47	60	-0.071	11.72	0.10
9	1.464	1.398	0.16	0.16	1.29	64	2.73	1.00	65	2.3	92	0.098	100	100	15.6	-0.2	585	334	351	511	488	454	1106	482	65	49	63	46	59	-0.071	11.61	0.08
10	1.622	1.556	0.16	0.16	1.29	64	2.74	1.01	65	2.3	92	0.094	101	102	15.4	-0.2	591	333	343	506	484	451	1115	480	65	48	63	46	60	-0.071	11.55	0.10
11	1.782	1.715	0.16	0.16	1.30	64	2.73	1.01	65	2.3	92	0.099	100	100	15.2	-0.2	598	333	337	501	480	450	1124	480	65	48	64	46	60	-0.071	11.26	0.07
12	1.940	1.873	0.16	0.16	1.29	64	2.73	1.01	65	2.3	91	0.097	100	100	15.1	-0.1	604	332	328	497	476	447	1129	480	65	48	64	46	59	-0.071	11.04	0.07
13	2.098	2.032	0.16	0.16	1.29	64	2.73	1.01	65	2.3	92	0.096	100	101	14.9	-0.2	610	332	321	492	472	445	1138	483	65	48	64	46	60	-0.072	11.26	0.10
14	2.257	2.191	0.16	0.16	1.29	65	2.73	1.01	65	2.3	92	0.096	101	101	14.7	-0.2	617	331	318	488	468	444	1146	485	65	48	64	46	60	-0.072	11.69	0.09
15	2.416	2.348	0.16	0.16	1.29	65	2.72	1.01	65	2.3	92	0.096	101	100	14.5	-0.2	625	331	312	484	464	443	1162	488	66	47	64	46	60	-0.072	12.21	0.10
16	2.574	2.507	0.16	0.16	1.29	65	2.74	1.00	66	2.3	93	0.096	100	101	14.3	-0.2	634	330	307	481	460	442	1185	494	66	47	64	45	60	-0.073	13.19	0.21
17	2.733	2.665	0.16	0.16	1.29	65	2.72	1.01	66	2.3	94	0.097	101	100	14.1	-0.2	643	329	302	478	457	442	1204	498	66	47	65	45	60	-0.073	13.42	0.35
18	2.892	2.823	0.16	0.16	1.30	65	2.74	1.00	66	2.3	94	0.094	102	102	13.9	-0.2	651	329	300	476	455	442	1214	500	66	47	65	45	61	-0.074	13.38	0.29
19	3.052	2.987	0.16	0.16	1.30	65	2.76	1.03	66	2.3	94	0.097	101	104	13.7	-0.2	657	328	298	474	453	442	1219	501	66	47	65	45	60	-0.073	13.08	0.13
20	3.211	3.147	0.16	0.16	1.30	66	2.75	1.02	66	2.4	95	0.094	102	103	13.5	-0.2	662	327	294	473	452	442	1224	501	66	47	65	45	60	-0.073	13.13	0.08
21	3.371	3.306	0.16	0.16	1.31	66	2.75	1.02	66	2.3	95	0.097	101	101	13.3	-0.2	667	326	290	471	450	441	1227	504	66	47	65	45	60	-0.074	13.44	0.38
22	3.531	3.467	0.16	0.16	1.30	66	2.76	1.02	67	2.4	95	0.097	101	102	13.1	-0.2	673	325	289	471	449	441	1232	506	66	47	65	45	60	-0.074	13.62	0.46
23	3.691	3.626	0.16	0.16	1.30	66	2.76	1.01	67	2.4	95	0.096	102	101	12.8	-0.3	677	324	288	470	447	441	1236	508	66	47	65	45	60	-0.074	13.74	0.51
24	3.850	3.786	0.16	0.16	1.30	66	2.76	1.02	67	2.4	95	0.095	101	102	12.6	-0.2	682	323	288	469	446	442	1244	508	67	47	65	45	60	-0.074	13.87	0.62
25	4.009	3.946	0.16	0.16	1.29	66	2.76	1.02	67	2.4	95	0.095	101	102	12.4	-0.2	686	322	287	469	445	442	1250	509	67	47	65	45	60	-0.074	13.92	0.71
26	4.169	4.105	0.16	0.16	1.30	66	2.76	1.02	67	2.4	95	0.097	101	101	12.2	-0.2	690	321	286	470	444	442	1257	510	67	47	66	45	60	-0.075	13.99	0.78
27	4.329	4.265	0.16	0.16	1.30	67	2.76	1.02	67	2.4	96	0.096	101	102	12.0	-0.2	693	320	287	470	444	443	1263	512	67	47	66	45	60	-0.074	13.86	0.79
28	4.489	4.425	0.16	0.16	1.29	67	2.76	1.01	68	2.4	95	0.098	100	101	11.7	-0.3	695	319	286	472	444	443	1266	511	67	47	66	45	60	-0.074	13.86	0.75
29	4.648	4.584	0.16	0.16	1.29	67	2.75	1.01	68	2.4	95	0.096	101	101	11.5	-0.2	697	318	285	473	444	443	1265	510	67	47	66	45	60	-0.074	13.82	0.7
30	4.807	4.743	0.16	0.16	1.29	67	2.76	1.01	68	2.4	95	0.096	101	101	11.3	-0.2	697	317	284	475	444	443	1259	509	67	47	66	45	60	-0.073	13.77	0.54
31	4.967	4.903	0.16	0.16	1.29	67	2.77	1.01	68	2.4	95	0.095	102	102	11.1	-0.2	696	316	284	477	444	443	1252	506	67	47	66	45	60	-0.072	13.7	0.43
32	5.127	5.062	0.16	0.16	1.29	67	2.76	1.01	68	2.4	95	0.095	102	101	10.9	-0.2	694	315	287	479	445	444	1242	506	67	47	66	45	60	-0.073	13.67	0.33
33	5.286	5.221	0.16	0.16	1.29	67	2.76	1.01	68	2.4	95	0.094	102	102	10.7	-0.2	692	314	286	481	445	444	1229	503	67	47	66	45	60	-0.074	13.54	0.34
34	5.445	5.381	0.16	0.16	1.29	68	2.77	1.01	68	2.4	95	0.096	101	102	10.5	-0.2	690	313	287	483	446	444	1219	501	67	47	66	45	60	-0.073	13.57	0.31
35	5.605	5.540	0.16	0.16	1.30	68	2.77	1.01	69	2.4	94	0.096	101	101	10.3	-0.2	689	312	288	485	446	444	1215	500	67	47	66	45	61	-0.072	13.53	0.3
36	5.765	5.699	0.16	0.16	1.29	68	2.77	1.01	69	2.4	94	0.097	101	100	10.2	-0.1	688	311	289	487	447	444	1211	499	67	47	66	45	61	-0.072	13.61	0.27
37	5.924	5.859	0.16	0.16	1.29	68	2.78	1.01	69	2.4	94	0.096	100	101	10.0	-0.2	688	310	289	489	448	445	1212	497	67	47	66	45	61	-0.072	13.66	0.32
38	6.083	6.018	0.16	0.16	1.29	68	2.78	1.01	69	2.4	95	0.093	102	102	9.8	-0.2	687	309	288	491	448	445	1214	496	67	47	65	45	61	-0.072	13.63	0.38
39	6.243	6.178	0.16	0.16	1.29	68	2.78	1.01	69	2.4	94	0.096	101	101	9.6	-0.2	687	308	289	493	449	445	1217	495	67	47	65	46	61	-0.072	13.6	0.31
40	6.403	6.337	0.16	0.16	1.29	68	2.79	1.01	69	2.4	94	0.097	101	100	9.4	-0.2	686	307	291	495	450	446	1214	493	67	47	65	46	61	-0.072	13.39	0.26

Wood Heater Test Data

u

Run: 1

Manufacturer: Kuma Stoves
Model: K-251
Tracking No.: 2464
Project No.: 0123WM014E
Test Date: 12-Apr-23
Beginning Clock Time: 12:04

Total Sampling Time: 177 min
Recording Interval: 1 min
Tunnel Diameter: 6
Background Sample Volume: 39.258 cubic feet

PM Control Modules: 335, 336
Dilution Tunnel MW(dry): 29.00 lb/lb-mole
Dilution Tunnel MW(wet): 28.78 lb/lb-mole
Dilution Tunnel H2O: 2.00 percent
Dilution Tunnel Static: -0.320 "H2O
Tunnel Area: 0.19635 ft2
Pitot Tube Cp: 0.99

Avg. Tunnel Velocity: 18.58 ft/sec.
Initial Tunnel Flow: 211.7 scfm
Average Tunnel Flow: 208.3 scfm
Post-Test Leak Check (1st Hr): 0.000 cfm @ 17 in. Hg
Post-Test Leak Check (1): 0.000 cfm @ 17 in. Hg
Post-Test Leak Check (2): 0.000 cfm @ 17 in. Hg
Average Test Piece Fuel Moisture: 21.48 Dry Basis %

Technician Signature:_____

Meter Box Y Factor: 1.004 (1) 1.002 (2) 1.012 (Amb)

Barometric Pressure:

Begin	Middle	End	Average
30.11	30.11	30.11	30.11

Room Air Velocity, fpn
<50

OMNI Equipment Numbers: _____

Velocity Traverse Data

	Pt.1	Pt.2	Pt.3	Pt.4	Pt.5	Pt.6	Pt.7	Pt.8	Center	
Initial dP	0.072	0.090	0.090	0.068	0.072	0.088	0.086	0.064	0.099	"H2O
Temp:	84	84	84	84	84	84	84	84	84	°F

V_{strav} 18.79 ft/sec V_{scent} 21.11 ft/sec F_p 0.890

qwq

	Particulate Sampling Data														Fuel Weight (lb)		Temperature Data (°F)													Stack Gas Data		
Elapsed Time (min)	Gas Meter 1 (ft^3)	Gas Meter 2 (ft^3)	Sample Rate 1 (cfm)	Sample Rate 2 (cfm)	Orifice dH 1 ("H_2O)	Meter 1 Temp (°F)	Meter 1 Vacuum ("Hg)	Orifice dH 2 ("H_2O)	Meter 2 Temp (°F)	Meter 2 Vacuum ("Hg)	Dilution Tunnel (°F)	Dilution Tunnel Center dP	Pro. Rate 1	Pro. Rate 2	Scale Reading	Weight Change	Firebox Top	Firebox Bottom	Firebox Back	Firebox Left	Firebox Right	Avg. Stove Surface (Tot = ΔT)	Catalyst Exit	Stack	Filter 1	Dryer Exit 1	Filter 2	Dryer Exit 2	Ambient	Draft ("H_2O)	CO_2 (%)	CO (%)
41	6.562	6.496	0.16	0.16	1.29	69	2.79	1.01	69	2.4	93	0.094	101	102	9.2	-0.2	684	306	290	498	451	446	1206	492	67	47	65	46	61	-0.071	13.34	0.2
42	6.721	6.656	0.16	0.16	1.29	69	2.79	1.01	69	2.4	93	0.096	100	101	9.1	-0.1	681	306	293	500	452	446	1197	491	67	47	65	46	60	-0.071	13.12	0.17
43	6.881	6.815	0.16	0.16	1.29	69	2.79	1.01	70	2.4	93	0.096	101	100	8.9	-0.2	679	305	291	502	453	446	1197	489	67	47	65	46	60	-0.071	13.12	0.10
44	7.042	6.974	0.16	0.16	1.29	69	2.79	1.00	70	2.4	92	0.094	102	101	8.8	-0.1	676	304	293	504	454	446	1192	488	66	48	65	46	61	-0.071	12.9	0.10
45	7.201	7.134	0.16	0.16	1.28	69	2.79	1.01	70	2.4	92	0.096	100	101	8.6	-0.2	672	303	294	507	455	446	1182	484	66	48	65	46	61	-0.070	12.67	0.10
46	7.360	7.293	0.16	0.16	1.29	69	2.78	1.01	70	2.4	92	0.097	100	100	8.5	-0.1	668	302	294	509	456	446	1169	481	66	48	65	46	61	-0.070	12.48	0.10
47	7.520	7.452	0.16	0.16	1.29	69	2.79	1.01	70	2.4	92	0.095	101	101	8.3	-0.2	663	302	296	511	458	446	1156	480	66	48	65	46	61	-0.070	12.52	0.10
48	7.681	7.612	0.16	0.16	1.29	69	2.79	1.01	70	2.4	92	0.096	101	101	8.2	-0.1	659	301	296	513	459	446	1144	478	66	48	65	46	61	-0.070	12.69	0.01
49	7.840	7.771	0.16	0.16	1.29	69	2.78	1.01	70	2.4	92	0.097	100	100	8.0	-0.2	656	300	296	515	460	445	1139	478	66	48	65	46	61	-0.070	12.96	0.10
50	7.999	7.930	0.16	0.16	1.29	70	2.78	1.00	70	2.4	92	0.096	100	100	7.8	-0.2	656	300	297	517	462	446	1144	477	66	48	65	46	60	-0.070	13.05	0.10
51	8.159	8.090	0.16	0.16	1.29	70	2.79	1.01	70	2.4	92	0.096	101	101	7.7	-0.1	656	299	297	519	463	447	1150	476	66	48	65	46	61	-0.069	13.02	0.10
52	8.319	8.249	0.16	0.16	1.29	70	2.78	1.01	71	2.4	92	0.096	101	100	7.5	-0.2	657	298	298	521	465	448	1151	478	66	48	65	47	61	-0.070	13.15	0.10
53	8.480	8.409	0.16	0.16	1.30	70	2.79	1.01	71	2.4	92	0.099	100	99	7.4	-0.1	655	298	300	522	466	448	1152	477	66	48	65	47	60	-0.070	13.15	0.10
54	8.639	8.569	0.16	0.16	1.29	70	2.78	1.01	71	2.4	92	0.097	99	100	7.2	-0.2	654	297	299	523	467	448	1155	476	66	48	65	47	60	-0.070	13.06	0.10
55	8.799	8.728	0.16	0.16	1.29	70	2.79	1.01	71	2.4	92	0.098	100	99	7.1	-0.1	654	296	301	525	469	449	1159	476	66	48	65	47	61	-0.069	13.12	0.10
56	8.959	8.888	0.16	0.16	1.30	70	2.79	1.02	71	2.4	91	0.098	99	100	6.9	-0.2	653	296	301	526	471	449	1163	475	66	49	64	47	60	-0.069	13.24	0.10
57	9.120	9.048	0.16	0.16	1.29	70	2.79	1.01	71	2.4	91	0.096	101	101	6.8	-0.1	652	295	300	527	472	449	1164	476	66	49	64	47	60	-0.070	13.22	0.10
58	9.280	9.208	0.16	0.16	1.29	70	2.79	1.01	71	2.4	91	0.098	99	100	6.6	-0.2	653	295	301	529	473	450	1166	476	66	49	64	47	61	-0.069	13.2	0.10
59	9.440	9.368	0.16	0.16	1.29	70	2.78	1.01	71	2.4	91	0.099	99	99	6.5	-0.1	653	294	302	530	475	451	1168	475	66	49	64	47	61	-0.069	13.17	0.10
60	9.600	9.529	0.16	0.16	1.30	70	2.78	1.02	71	2.4	91	0.098	99	100	6.4	-0.1	653	294	304	531	476	452	1165	475	66	49	64	47	60	-0.069	13.07	0.10
61	9.758	9.689	0.16	0.16	1.30	71	3.1	1.02	71	2.4	91	0.097	99	100	6.2	-0.2	652	294	304	532	477	452	1162	474	61	49	64	47	60	-0.069	13.12	0.10
62	9.920	9.849	0.16	0.16	1.29	71	3.12	1.02	71	2.4	90	0.099	100	99	6.1	-0.1	653	293	304	533	478	452	1164	473	61	49	64	47	60	-0.069	12.67	0.04
63	10.080	10.010	0.16	0.16	1.29	71	3.13	1.02	71	2.4	90	0.096	100	101	5.9	-0.2	652	293	303	535	479	452	1162	472	62	49	64	48	60	-0.068	12.59	0.03
64	10.240	10.170	0.16	0.16	1.29	71	3.12	1.02	72	2.4	91	0.095	101	101	5.8	-0.1	650	293	306	537	480	453	1158	468	62	49	64	48	60	-0.068	12.3	0.03
65	10.400	10.331	0.16	0.16	1.30	71	3.11	1.02	72	2.4	90	0.097	100	100	5.7	-0.1	648	293	307	538	481	453	1154	466	62	50	64	48	60	-0.067	12.28	0.02
66	10.560	10.492	0.16	0.16	1.30	71	3.13	1.01	72	2.4	90	0.100	98	99	5.6	-0.1	646	293	308	540	482	454	1151	466	63	50	64	48	60	-0.068	12.08	0.03
67	10.721	10.652	0.16	0.16	1.30	71	3.12	1.01	72	2.4	90	0.097	100	100	5.4	-0.2	644	292	308	541	482	453	1150	465	63	50	64	48	60	-0.067	11.91	0.02
68	10.882	10.812	0.16	0.16	1.29	71	3.11	1.02	72	2.4	90	0.097	100	100	5.3	-0.1	642	292	309	542	483	454	1143	461	63	50	64	48	60	-0.067	11.58	0.01
69	11.041	10.973	0.16	0.16	1.29	71	3.12	1.02	72	2.4	89	0.097	99	100	5.2	-0.1	638	292	311	543	483	453	1133	458	63	50	64	48	60	-0.066	11.18	0.02
70	11.202	11.134	0.16	0.16	1.30	71	3.12	1.02	72	2.4	89	0.098	100	100	5.1	-0.1	633	292	311	544	484	453	1121	456	63	50	64	48	61	-0.066	10.92	0.02
71	11.362	11.294	0.16	0.16	1.30	71	3.12	1.02	72	2.4	89	0.097	100	100	5.0	-0.1	629	292	314	544	484	453	1112	454	64	50	64	48	60	-0.066	10.99	0.02
72	11.524	11.455	0.16	0.16	1.30	71	3.11	1.02	72	2.4	89	0.096	101	101	4.9	-0.1	626	292	315	545	485	453	1111	454	64	50	64	48	61	-0.066	10.96	0.03
73	11.684	11.617	0.16	0.16	1.29	72	3.11	1.03	72	2.4	89	0.100	98	99	4.8	-0.1	623	292	318	545	485	453	1110	453	64	50	65	49	61	-0.066	10.84	0.03
74	11.844	11.777	0.16	0.16	1.30	72	3.12	1.03	72	2.4	89	0.092	102	102	4.7	-0.1	621	292	320	544	485	452	1109	451	64	50	65	49	61	-0.066	10.73	0.04
75	12.004	11.939	0.16	0.16	1.30	72	3.11	1.02	72	2.4	89	0.100	98	99	4.6	-0.1	618	292	325	544	486	453	1107	451	64	50	65	49	62	-0.066	10.6	0.03
76	12.165	12.100	0.16	0.16	1.31	72	3.11	1.03	72	2.4	89	0.096	101	101	4.5	-0.1	614	292	327	543	486	452	1101	448	64	51	65	49	61	-0.065	10.43	0.03
77	12.327	12.262	0.16	0.16	1.30	72	3.11	1.03	72	2.4	89	0.097	101	101	4.4	-0.1	610	292	331	542	486	452	1092	447	64	51	65	49	60	-0.066	10.3	0.04
78	12.488	12.422	0.16	0.16	1.30	72	3.1	1.03	72	2.4	89	0.100	98	98	4.3	-0.1	605	292	335	540	486	452	1084	445	64	51	64	49	61	-0.065	10.17	0.03
79	12.648	12.584	0.16	0.16	1.30	72	3.09	1.03	72	2.4	88	0.097	99	101	4.2	-0.1	600	292	338	538	486	451	1074	442	64	51	64	49	62	-0.065	9.98	0.03
80	12.809	12.746	0.16	0.16	1.30	72	3.09	1.03	72	2.3	88	0.100	98	99	4.1	-0.1	595	292	340	537	486	450	1063	439	64	51	64	50	62	-0.066	9.77	0.03
81	12.970	12.908	0.16	0.16	1.31	72	3.08	1.03	72	2.4	88	0.096	100	101	4.0	-0.1	588	293	342	535	486	449	1050	436	64	51	64	50	61	-0.065	9.66	0.03
82	13.131	13.069	0.16	0.16	1.30	72	3.1	1.03	72	2.4	87	0.097	100	100	3.9	-0.1	583	293	345	533	486	448	1039	434	64	51	64	50	61	-0.065	9.6	0.03
83	13.293	13.231	0.16	0.16	1.31	72	3.1	1.03	72	2.3	87	0.097	100	101	3.9	0	577	293	348	531	486	447	1029	432	64	51	64	50	62	-0.064	9.62	0.03
84	13.453	13.393	0.16	0.16	1.30	72	3.1	1.03	72	2.4	87	0.097	99	101	3.8	-0.1	572	294	349	529	487	446	1021	430	64	51	64	50	61	-0.064	9.52	0.03

Wood Heater Test Data

u

Run: 1

Manufacturer: Kuma Stoves
Model: K-251
Tracking No.: 2464
Project No.: 0123WM014E
Test Date: 12-Apr-23
Beginning Clock Time: 12:04

Total Sampling Time: 177 min
Recording Interval: 1 min
Tunnel Diameter: 6
Background Sample Volume: 39.258 cubic feet

PM Control Modules: 335, 336
Dilution Tunnel MW(dry): 29.00 lb/lb-mole
Dilution Tunnel MW(wet): 28.78 lb/lb-mole
Dilution Tunnel H2O: 2.00 percent
Dilution Tunnel Static: -0.320 "H2O
Tunnel Area: 0.19635 ft2
Pitot Tube Cp: 0.99

Avg. Tunnel Velocity: 18.58 ft/sec.
Initial Tunnel Flow: 211.7 scfm
Average Tunnel Flow: 208.3 scfm
Post-Test Leak Check (1st Hr): 0.000 cfm @ 17 in. Hg
Post-Test Leak Check (1): 0.000 cfm @ 17 in. Hg
Post-Test Leak Check (2): 0.000 cfm @ 17 in. Hg
Average Test Piece Fuel Moisture: 21.48 Dry Basis %

Technician Signature:_____

Meter Box Y Factor: 1.004 (1) 1.002 (2) 1.012 (Amb)

Export to PDF

Barometric Pressure:	Begin	Middle	End	Average
	30.11	30.11	30.11	30.11

Room Air Velocity, fpn
<50

OMNI Equipment Numbers: _____

Velocity Traverse Data

	Pt.1	Pt.2	Pt.3	Pt.4	Pt.5	Pt.6	Pt.7	Pt.8	Center	
Initial dP	0.072	0.090	0.090	0.068	0.072	0.088	0.086	0.064	0.099	"H2O
Temp:	84	84	84	84	84	84	84	84	84	°F

V_{strav} 18.79 ft/sec V_{scent} 21.11 ft/sec F_p 0.890

qwq

	Particulate Sampling Data														Fuel Weight (lb)		Temperature Data (°F)													Stack Gas Data		
Elapsed Time (min)	Gas Meter 1 (ft^3)	Gas Meter 2 (ft^3)	Sample Rate 1 (cfm)	Sample Rate 2 (cfm)	Orifice dH 1 ("H_2O)	Meter 1 Temp (°F)	Meter 1 Vacuum ("Hg)	Orifice dH 2 ("H_2O)	Meter 2 Temp (°F)	Meter 2 Vacuum ("Hg)	Dilution Tunnel (°F)	Dilution Tunnel Center dP	Pro. Rate 1	Pro. Rate 2	Scale Reading	Weight Change	Firebox Top	Firebox Bottom	Firebox Back	Firebox Left	Firebox Right	Avg. Stove Surface (Tot = ΔT)	Catalyst Exit	Stack	Filter 1	Dryer Exit 1	Filter 2	Dryer Exit 2	Ambient	Draft ("H_2O)	CO_2 (%)	CO (%)
85	13.614	13.555	0.16	0.16	1.30	72	3.11	1.03	72	2.3	87	0.097	100	101	3.7	-0.1	568	294	350	528	487	445	1017	429	65	51	64	50	61	-0.064	9.56	0.03
86	13.774	13.716	0.16	0.16	1.31	72	3.09	1.03	72	2.3	87	0.095	100	101	3.6	-0.1	564	295	353	526	487	445	1012	427	65	51	64	50	61	-0.063	9.62	0.03
87	13.936	13.878	0.16	0.16	1.31	72	3.1	1.03	72	2.3	87	0.098	100	100	3.5	-0.1	560	295	357	524	488	445	1007	425	65	51	64	50	61	-0.063	9.46	0.03
88	14.097	14.041	0.16	0.16	1.30	72	3.1	1.04	72	2.3	87	0.095	101	102	3.5	0	557	296	357	522	489	444	1001	423	65	51	64	50	60	-0.063	9.44	0.03
89	14.259	14.203	0.16	0.16	1.30	72	3.11	1.03	72	2.3	87	0.096	101	101	3.4	-0.1	553	297	359	521	489	444	997	422	65	51	64	51	61	-0.063	9.41	0.03
90	14.420	14.365	0.16	0.16	1.30	72	3.11	1.03	72	2.3	87	0.095	101	102	3.3	-0.1	550	297	361	519	490	443	992	419	65	51	64	51	61	-0.063	9.35	0.03
91	14.580	14.527	0.16	0.16	1.31	72	3.11	1.04	72	2.3	86	0.098	99	100	3.2	-0.1	546	298	362	518	491	443	988	418	65	51	64	51	62	-0.062	9.27	0.03
92	14.741	14.688	0.16	0.16	1.29	72	3.07	1.00	72	2.3	87	0.097	100	100	3.2	0	543	299	363	516	492	443	982	417	65	51	64	51	61	-0.062	9.23	0.03
93	14.902	14.847	0.16	0.16	1.30	72	3.09	1.00	72	2.3	87	0.097	100	99	3.1	-0.1	539	300	365	514	493	442	978	414	65	51	64	51	61	-0.062	9.21	0.03
94	15.064	15.007	0.16	0.16	1.30	72	3.09	1.01	72	2.3	86	0.096	101	100	3.0	-0.1	536	300	367	513	494	442	974	413	65	51	64	51	61	-0.061	9.18	0.03
95	15.224	15.168	0.16	0.16	1.29	72	3.1	1.01	72	2.3	85	0.094	101	102	2.9	-0.1	533	301	368	512	494	442	970	412	65	51	64	51	61	-0.061	9.16	0.03
96	15.385	15.328	0.16	0.16	1.30	72	3.09	1.00	72	2.3	85	0.095	101	100	2.9	0	530	302	370	510	495	441	967	411	65	51	64	51	61	-0.061	9.08	0.03
97	15.546	15.488	0.16	0.16	1.30	72	3.1	1.00	73	2.3	85	0.096	100	100	2.8	-0.1	527	303	371	509	496	441	965	409	65	51	64	51	61	-0.061	8.93	0.02
98	15.706	15.648	0.16	0.16	1.30	72	3.09	1.01	73	2.3	86	0.096	100	100	2.7	-0.1	525	304	370	508	497	441	964	407	65	52	64	51	61	-0.061	8.88	0.03
99	15.867	15.808	0.16	0.16	1.30	72	3.09	1.01	73	2.3	85	0.096	100	100	2.7	0	522	305	375	506	497	441	962	406	65	52	64	52	61	-0.061	8.82	0.03
100	16.029	15.968	0.16	0.16	1.30	72	3.09	1.01	73	2.3	85	0.096	101	100	2.6	-0.1	519	306	373	505	498	440	959	405	65	52	64	52	61	-0.061	8.79	0.03
101	16.190	16.128	0.16	0.16	1.30	72	3.09	1.01	73	2.3	84	0.095	101	100	2.6	0	516	307	374	504	499	440	954	404	65	52	64	52	60	-0.061	8.73	0.03
102	16.350	16.288	0.16	0.16	1.30	72	3.1	1.00	73	2.3	84	0.098	98	99	2.5	-0.1	513	308	378	503	500	440	949	402	64	52	64	52	61	-0.061	8.64	0.03
103	16.511	16.448	0.16	0.16	1.30	72	3.1	1.01	73	2.3	84	0.094	101	101	2.4	-0.1	509	309	378	501	500	439	943	400	64	52	64	52	61	-0.060	8.49	0.03
104	16.672	16.609	0.16	0.16	1.30	72	3.09	1.01	73	2.3	84	0.098	99	99	2.4	0	506	310	377	500	501	439	937	398	64	52	64	52	60	-0.060	8.37	0.03
105	16.834	16.769	0.16	0.16	1.30	72	3.1	1.01	73	2.3	84	0.097	100	99	2.3	-0.1	502	311	379	499	501	438	931	397	64	52	64	52	61	-0.059	8.34	0.03
106	16.995	16.928	0.16	0.16	1.30	72	3.09	1.01	73	2.3	83	0.097	99	98	2.3	0	498	312	381	499	501	438	925	395	64	52	64	52	61	-0.060	8.36	0.03
107	17.155	17.089	0.16	0.16	1.29	72	3.09	1.01	73	2.3	83	0.097	99	100	2.2	-0.1	495	313	380	498	502	438	920	393	64	52	64	52	61	-0.060	8.34	0.03
108	17.315	17.249	0.16	0.16	1.29	72	3.07	1.00	73	2.3	83	0.096	99	100	2.2	0	492	314	381	497	502	437	916	392	64	52	64	52	61	-0.059	8.23	0.03
109	17.475	17.409	0.16	0.16	1.29	72	3.07	1.01	73	2.3	83	0.095	100	100	2.1	-0.1	489	315	382	496	502	437	912	391	64	52	64	52	61	-0.059	7.99	0.03
110	17.636	17.569	0.16	0.16	1.29	72	3.07	1.01	73	2.3	83	0.096	100	100	2.1	0	486	316	384	496	502	437	907	390	64	52	64	52	61	-0.059	7.91	0.03
111	17.796	17.730	0.16	0.16	1.29	72	3.08	1.01	73	2.3	83	0.095	100	101	2.0	-0.1	483	317	383	495	502	436	902	388	64	52	64	52	61	-0.059	7.94	0.03
112	17.955	17.889	0.16	0.16	1.28	72	3.06	1.01	73	2.3	83	0.097	98	98	2.0	0	480	319	385	494	502	436	899	387	64	52	64	52	61	-0.059	7.92	0.04
113	18.115	18.049	0.16	0.16	1.29	72	3.08	1.01	73	2.3	82	0.096	99	99	1.9	-0.1	478	320	387	493	502	436	897	386	64	52	64	52	60	-0.058	7.96	0.03
114	18.275	18.210	0.16	0.16	1.29	72	3.07	1.01	73	2.3	82	0.097	99	100	1.9	0	476	321	384	493	502	435	894	386	64	52	64	52	61	-0.059	7.92	0.03
115	18.437	18.370	0.16	0.16	1.29	72	3.07	1.01	73	2.3	83	0.100	99	97	1.8	-0.1	474	322	386	492	502	435	892	386	64	52	64	52	60	-0.058	7.82	0.03
116	18.596	18.530	0.16	0.16	1.28	72	3.08	1.01	73	2.3	83	0.096	99	100	1.8	0	473	323	385	491	501	435	888	385	64	52	64	52	61	-0.058	7.55	0.03
117	18.756	18.691	0.16	0.16	1.28	72	3.07	1.01	73	2.3	82	0.099	98	99	1.7	-0.1	471	325	382	490	501	434	883	383	64	52	64	52	61	-0.058	7.12	0.03
118	18.916	18.850	0.16	0.16	1.29	72	3.07	1.01	73	2.3	82	0.099	98	97	1.7	0	467	326	382	489	502	433	874	379	64	52	64	53	60	-0.057	6.8	0.03
119	19.076	19.010	0.16	0.16	1.29	72	3.08	1.01	73	2.3	82	0.096	99	99	1.6	-0.1	463	327	384	488	502	433	866	376	64	52	64	53	61	-0.057	6.74	0.03
120	19.237	19.171	0.16	0.16	1.28	72	3.06	1.01	73	2.3	82	0.097	99	100	1.6	0	459	328	385	487	502	432	860	374	64	52	64	53	61	-0.057	6.7	0.03
121	19.397	19.331	0.16	0.16	1.28	72	3.06	1.01	73	2.3	82	0.096	99	99	1.6	0	455	330	378	486	502	430	855	372	64	52	64	53	60	-0.057	6.68	0.04
122	19.557	19.491	0.16	0.16	1.29	72	3.07	1.01	73	2.3	82	0.098	98	98	1.5	-0.1	451	331	379	485	502	430	850	371	64	52	64	53	60	-0.057	6.58	0.04
123	19.716	19.652	0.16	0.16	1.28	72	3.06	1.01	73	2.3	81	0.096	99	100	1.5	0	448	332	378	484	502	429	846	370	64	52	64	53	60	-0.057	6.34	0.04
124	19.877	19.811	0.16	0.16	1.29	72	3.06	1.01	73	2.3	81	0.099	98	97	1.5	0	444	333	374	482	502	427	841	368	64	52	64	53	60	-0.056	6.22	0.05
125	20.037	19.972	0.16	0.16	1.29	72	3.08	1.00	73	2.3	81	0.098	98	99	1.4	-0.1	440	335	373	481	502	426	836	366	64	52	64	53	60	-0.056	6.18	0.05
126	20.197	20.132	0.16	0.16	1.28	72	3.08	1.01	73	2.3	81	0.096	99	99	1.4	0	436	335	372	479	501	425	829	364	64	52	64	53	60	-0.056	6.25	0.05
127	20.357	20.292	0.16	0.16	1.28	72	3.07	1.00	73	2.3	81	0.096	99	99	1.4	0	432	336	370	478	500	423	823	362	64	52	64	53	60	-0.056	6.28	0.05
128	20.517	20.452	0.16	0.16	1.29	72	3.07	1.01	73	2.3	80	0.096	99	99	1.4	0	428	338	368	476	499	422	817	360	64	52	64	53	60	-0.056	6.28	0.05

Wood Heater Test Data

u

Run: 1

Manufacturer: Kuma Stoves
Model: K-251
Tracking No.: 2464
Project No.: 0123WM014E
Test Date: 12-Apr-23
Beginning Clock Time: 12:04

Total Sampling Time: 177 min
Recording Interval: 1 min
Tunnel Diameter: 6
Background Sample Volume: 39.258 cubic feet

PM Control Modules: 335, 336
Dilution Tunnel MW(dry): 29.00 lb/lb-mole
Dilution Tunnel MW(wet): 28.78 lb/lb-mole
Dilution Tunnel H2O: 2.00 percent
Dilution Tunnel Static: -0.320 "H2O
Tunnel Area: 0.19635 ft2
Pitot Tube Cp: 0.99

Avg. Tunnel Velocity: 18.58 ft/sec.
Initial Tunnel Flow: 211.7 scfm
Average Tunnel Flow: 208.3 scfm
Post-Test Leak Check (1st Hr): 0.000 cfm @ 17 in. Hg
Post-Test Leak Check (1): 0.000 cfm @ 17 in. Hg
Post-Test Leak Check (2): 0.000 cfm @ 17 in. Hg
Average Test Piece Fuel Moisture: 21.48 Dry Basis %

Technician Signature:_____

Meter Box Y Factor: 1.004 (1) 1.002 (2) 1.012 (Amb)

Barometric Pressure:

Begin	Middle	End	Average
30.11	30.11	30.11	30.11

Room Air Velocity, fpn
<50

OMNI Equipment Numbers: _____

Export to PDF

Velocity Traverse Data

	Pt.1	Pt.2	Pt.3	Pt.4	Pt.5	Pt.6	Pt.7	Pt.8	Center	
Initial dP	0.072	0.090	0.090	0.068	0.072	0.088	0.086	0.064	0.099	"H2O
Temp:	84	84	84	84	84	84	84	84	84	°F

V_{strav} 18.79 ft/sec V_{scent} 21.11 ft/sec F_p 0.890

qwq

	Particulate Sampling Data														Fuel Weight (lb)		Temperature Data (°F)													Stack Gas Data		
Elapsed Time (min)	Gas Meter 1 (ft^3)	Gas Meter 2 (ft^3)	Sample Rate 1 (cfm)	Sample Rate 2 (cfm)	Orifice dH 1 ("H_2O)	Meter 1 Temp (°F)	Meter 1 Vacuum ("Hg)	Orifice dH 2 ("H_2O)	Meter 2 Temp (°F)	Meter 2 Vacuum ("Hg)	Dilution Tunnel (°F)	Dilution Tunnel Center dP	Pro. Rate 1	Pro. Rate 2	Scale Reading	Weight Change	Firebox Top	Firebox Bottom	Firebox Back	Firebox Left	Firebox Right	Avg. Stove Surface (Tot = ΔT)	Catalyst Exit	Stack	Filter 1	Dryer Exit 1	Filter 2	Dryer Exit 2	Ambient	Draft ("H_2O)	CO_2 (%)	CO (%)
129	20.678	20.613	0.16	0.16	1.28	72	3.08	1.01	73	2.3	80	0.098	99	99	1.3	-0.1	424	338	366	475	498	420	811	358	64	52	64	53	60	-0.055	6.34	0.05
130	20.838	20.773	0.16	0.16	1.28	72	3.06	1.00	73	2.3	80	0.096	99	99	1.3	0	421	339	364	474	497	419	807	356	64	52	64	53	60	-0.054	6.36	0.05
131	20.998	20.932	0.16	0.16	1.28	72	3.07	1.01	73	2.3	80	0.095	100	99	1.3	0	417	340	365	473	497	418	802	354	64	52	64	53	60	-0.054	6.41	0.05
132	21.158	21.093	0.16	0.16	1.28	72	3.06	1.01	73	2.3	80	0.096	99	100	1.2	-0.1	414	341	363	472	495	417	798	353	64	52	64	53	61	-0.054	6.44	0.05
133	21.318	21.254	0.16	0.16	1.29	72	3.06	1.00	73	2.3	80	0.096	99	100	1.2	0	410	342	365	471	494	416	793	351	64	52	64	53	61	-0.054	6.4	0.05
134	21.479	21.413	0.16	0.16	1.29	72	3.08	1.01	73	2.3	80	0.095	100	99	1.2	0	407	343	361	470	493	415	788	350	64	52	64	53	61	-0.054	6.29	0.05
135	21.639	21.574	0.16	0.16	1.28	72	3.07	1.01	73	2.3	80	0.092	101	102	1.2	0	404	343	363	469	492	414	784	349	64	52	64	53	60	-0.054	6.31	0.05
136	21.798	21.734	0.16	0.16	1.28	72	3.07	1.01	73	2.3	79	0.095	99	100	1.1	-0.1	401	344	360	468	491	413	781	349	64	52	64	53	60	-0.054	6.35	0.05
137	21.958	21.894	0.16	0.16	1.29	72	3.08	1.01	73	2.3	79	0.095	100	100	1.1	0	398	345	359	467	490	412	779	347	64	52	64	53	61	-0.054	6.4	0.05
138	22.119	22.054	0.16	0.16	1.29	72	3.06	1.01	73	2.3	80	0.097	99	99	1.1	0	396	345	363	465	489	412	776	346	64	52	64	53	60	-0.054	6.4	0.05
139	22.279	22.215	0.16	0.16	1.28	72	3.07	1.01	73	2.3	79	0.096	99	100	1.0	-0.1	393	346	359	465	488	410	773	345	64	52	64	53	61	-0.053	6.4	0.05
140	22.439	22.375	0.16	0.16	1.28	72	3.07	1.01	73	2.3	80	0.095	100	100	1.0	0	391	346	362	464	487	410	770	344	64	52	64	53	61	-0.053	6.31	0.05
141	22.599	22.535	0.16	0.16	1.28	72	3.07	1.00	73	2.3	79	0.098	98	98	1.0	0	388	347	359	463	486	409	765	341	64	52	64	53	60	-0.053	6.03	0.05
142	22.759	22.696	0.16	0.16	1.28	72	3.08	1.00	73	2.3	79	0.099	97	98	1.0	0	386	348	358	462	485	408	762	340	64	52	64	53	60	-0.053	5.88	0.05
143	22.920	22.856	0.16	0.16	1.28	72	3.06	1.01	73	2.3	79	0.097	99	99	0.9	-0.1	384	349	357	461	484	407	760	339	64	52	64	53	60	-0.054	5.88	0.05
144	23.080	23.016	0.16	0.16	1.29	72	3.07	1.00	73	2.3	79	0.099	97	98	0.9	0	382	349	356	460	483	406	757	338	64	52	64	53	60	-0.053	5.98	0.05
145	23.240	23.177	0.16	0.16	1.28	72	3.08	1.01	73	2.3	79	0.099	97	98	0.9	0	380	350	356	460	482	406	755	337	64	52	64	53	61	-0.053	6.02	0.05
146	23.399	23.336	0.16	0.16	1.28	72	3.06	1.01	73	2.3	79	0.095	99	99	0.9	0	378	351	354	459	481	405	753	336	64	52	64	53	61	-0.053	5.94	0.05
147	23.560	23.497	0.16	0.16	1.28	72	3.07	1.01	73	2.3	79	0.094	101	101	0.8	-0.1	376	352	352	458	480	404	752	336	64	52	63	53	60	-0.052	5.96	0.05
148	23.721	23.658	0.16	0.16	1.28	72	3.08	1.01	73	2.3	79	0.095	100	100	0.8	0	375	353	351	457	479	403	751	336	64	52	64	53	60	-0.053	5.98	0.05
149	23.881	23.818	0.16	0.16	1.28	72	3.08	1.00	73	2.3	79	0.099	97	98	0.8	0	373	353	351	456	477	402	748	336	64	52	64	53	61	-0.053	6.13	0.05
150	24.041	23.977	0.16	0.16	1.28	72	3.07	1.01	73	2.3	79	0.096	99	99	0.8	0	372	354	349	455	476	401	746	336	64	52	63	53	61	-0.053	6.18	0.05
151	24.200	24.138	0.16	0.16	1.29	72	3.07	1.01	73	2.3	79	0.098	97	99	0.7	-0.1	370	355	348	454	475	400	744	335	64	52	64	53	60	-0.053	6.24	0.05
152	24.361	24.299	0.16	0.16	1.29	72	3.06	1.00	73	2.3	78	0.096	100	100	0.7	0	369	355	350	453	475	400	741	335	64	52	63	53	61	-0.053	6.33	0.05
153	24.522	24.458	0.16	0.16	1.29	72	3.07	1.01	73	2.3	78	0.097	99	98	0.7	0	369	356	348	452	474	400	741	335	64	52	63	53	61	-0.053	6.31	0.05
154	24.682	24.619	0.16	0.16	1.28	72	3.08	1.01	73	2.3	79	0.096	99	100	0.6	-0.1	368	356	350	452	473	400	741	337	64	52	63	53	61	-0.053	6.32	0.05
155	24.842	24.780	0.16	0.16	1.28	72	3.08	1.00	73	2.3	79	0.095	100	100	0.6	0	368	357	347	451	473	399	741	337	64	52	63	53	61	-0.052	6.42	0.05
156	25.002	24.939	0.16	0.16	1.29	72	3.06	1.00	73	2.3	78	0.097	98	98	0.6	0	367	357	349	450	472	399	741	337	64	52	63	53	60	-0.053	6.1	0.05
157	25.162	25.099	0.16	0.16	1.29	72	3.07	1.01	73	2.3	79	0.099	97	98	0.6	0	367	358	348	450	472	399	742	336	64	52	63	53	60	-0.053	6.02	0.05
158	25.323	25.261	0.16	0.16	1.28	72	3.06	1.01	73	2.3	79	0.098	99	99	0.5	-0.1	367	358	349	449	471	399	744	336	64	52	63	53	60	-0.053	6.02	0.05
159	25.483	25.420	0.16	0.16	1.28	72	3.07	1.00	73	2.3	79	0.099	97	97	0.5	0	366	359	349	448	471	399	744	335	64	53	63	53	60	-0.053	5.96	0.05
160	25.643	25.580	0.16	0.16	1.29	72	3.07	1.00	73	2.3	79	0.097	98	99	0.5	0	366	359	344	447	471	397	744	335	64	52	63	53	60	-0.052	5.96	0.05
161	25.803	25.742	0.16	0.16	1.29	72	3.08	1.01	73	2.3	79	0.100	97	98	0.5	0	365	359	347	447	470	398	743	334	64	53	63	53	61	-0.053	6.01	0.05
162	25.964	25.901	0.16	0.16	1.29	72	3.07	1.01	73	2.3	79	0.099	98	97	0.4	-0.1	364	360	346	446	470	397	743	334	64	53	63	53	61	-0.053	5.96	0.05
163	26.124	26.061	0.16	0.16	1.29	72	3.07	1.00	73	2.3	79	0.096	99	99	0.4	0	364	360	341	445	470	396	742	335	64	53	63	53	61	-0.053	6.16	0.06
164	26.284	26.223	0.16	0.16	1.28	72	3.08	1.00	73	2.3	79	0.094	100	101	0.4	0	364	361	343	445	469	396	743	335	64	53	63	53	60	-0.052	6.14	0.06
165	26.444	26.382	0.16	0.16	1.28	72	3.08	1.00	73	2.3	79	0.098	98	98	0.4	0	363	361	343	445	469	396	743	334	64	53	63	53	60	-0.052	6	0.05
166	26.604	26.542	0.16	0.16	1.28	73	3.07	1.01	73	2.3	79	0.095	99	100	0.3	-0.1	363	362	341	444	469	396	742	334	64	53	64	53	60	-0.053	6.03	0.05
167	26.765	26.703	0.16	0.16	1.28	73	3.07	1.00	73	2.3	79	0.099	98	98	0.3	0	362	362	340	443	468	395	741	334	64	53	64	53	60	-0.053	6.06	0.05
168	26.925	26.863	0.16	0.16	1.28	73	3.08	1.00	73	2.3	79	0.099	97	98	0.3	0	362	362	341	443	468	395	741	334	64	53	64	53	61	-0.053	6.13	0.05
169	27.085	27.023	0.16	0.16	1.28	73	3.09	1.01	73	2.3	79	0.097	98	99	0.2	-0.1	361	363	340	442	468	395	741	334	64	53	64	53	60	-0.052	6.19	0.05
170	27.245	27.184	0.16	0.16	1.29	73	3.08	1.00	73	2.3	79	0.098	98	99	0.2	0	361	363	338	442	468	394	742	335	64	53	63	53	60	-0.053	6.2	0.06
171	27.405	27.344	0.16	0.16	1.28	73	3.08	1.00	73	2.3	79	0.096	99	99	0.2	0	361	363	340	441	467	394	743	335	64	53	63	53	60	-0.053	6.22	0.06
172	27.566	27.504	0.16	0.16	1.29	73	3.08	1.01	73	2.3	79	0.099	98	98	0.2	0	361	363	337	441	467	394	745	336	64	53	63	53	61	-0.053	6.24	0.06

Wood Heater Test Data

u

Run: 1

Manufacturer: Kuma Stoves
Model: K-251
Tracking No.: 2464
Project No.: 0123WM014E
Test Date: 12-Apr-23
Beginning Clock Time: 12:04

Total Sampling Time: 177 min
Recording Interval: 1 min
Tunnel Diameter: 6
Background Sample Volume: 39.258 cubic feet

PM Control Modules: 335, 336
Dilution Tunnel MW(dry): 29.00 lb/lb-mole
Dilution Tunnel MW(wet): 28.78 lb/lb-mole
Dilution Tunnel H2O: 2.00 percent
Dilution Tunnel Static: -0.320 "H2O
Tunnel Area: 0.19635 ft2
Pitot Tube Cp: 0.99

Avg. Tunnel Velocity: 18.58 ft/sec.
Initial Tunnel Flow: 211.7 scfm
Average Tunnel Flow: 208.3 scfm
Post-Test Leak Check (1st Hr): 0.000 cfm @ 17 in. Hg
Post-Test Leak Check (1): 0.000 cfm @ 17 in. Hg
Post-Test Leak Check (2): 0.000 cfm @ 17 in. Hg
Average Test Piece Fuel Moisture: 21.48 Dry Basis %

Technician Signature:_____

Meter Box Y Factor: 1.004 (1) 1.002 (2) 1.012 (Amb)

Export to PDF

Barometric Pressure:	Begin	Middle	End	Average
	30.11	30.11	30.11	30.11

Room Air Velocity, fpn
<50

OMNI Equipment Numbers: _____

Velocity Traverse Data

	Pt.1	Pt.2	Pt.3	Pt.4	Pt.5	Pt.6	Pt.7	Pt.8	Center	
Initial dP	0.072	0.090	0.090	0.068	0.072	0.088	0.086	0.064	0.099	"H2O
Temp:	84	84	84	84	84	84	84	84	84	°F

V_{strav} 18.79 ft/sec V_{scent} 21.11 ft/sec F_p 0.890

qwq

	Particulate Sampling Data														Fuel Weight (lb)		Temperature Data (°F)													Stack Gas Data		
Elapsed Time (min)	Gas Meter 1 (ft^3)	Gas Meter 2 (ft^3)	Sample Rate 1 (cfm)	Sample Rate 2 (cfm)	Orifice dH 1 ("H_2O)	Meter 1 Temp (°F)	Meter 1 Vacuum ("Hg)	Orifice dH 2 ("H_2O)	Meter 2 Temp (°F)	Meter 2 Vacuum ("Hg)	Dilution Tunnel (°F)	Dilution Tunnel Center dP	Pro. Rate 1	Pro. Rate 2	Scale Reading	Weight Change	Firebox Top	Firebox Bottom	Firebox Back	Firebox Left	Firebox Right	Avg. Stove Surface (Tot = ΔT)	Catalyst Exit	Stack	Filter 1	Dryer Exit 1	Filter 2	Dryer Exit 2	Ambient	Draft ("H_2O)	CO_2 (%)	CO (%)
173	27.726	27.664	0.16	0.16	1.28	73	3.08	1.01	73	2.3	79	0.099	97	98	0.1	-0.1	362	363	338	441	467	394	746	335	64	53	63	53	60	-0.053	6.18	0.06
174	27.886	27.825	0.16	0.16	1.28	73	3.07	1.00	73	2.3	79	0.099	97	98	0.1	0	362	363	336	440	467	394	746	335	64	53	64	53	61	-0.053	6.18	0.06
175	28.045	27.985	0.16	0.16	1.29	73	3.06	1.00	73	2.3	79	0.099	97	98	0.1	0	362	363	337	440	466	394	746	336	64	53	63	53	60	-0.053	6.18	0.06
176	28.206	28.145	0.16	0.16	1.28	73	3.06	1.00	73	2.3	79	0.096	99	99	0.1	0	362	363	338	440	466	394	746	336	64	53	63	53	61	-0.054	6.11	0.06
177	28.367	28.306	0.16	0.16	1.28	73	3.07	1.01	73	2.3	79	0.098	98	99	0.0	-0.1	362	364	336	439	465	393	746	336	64	53	63	53	61	-0.053	6.05	0.06

Wood Heater Lab Data - ASTM E2780 / ASTM E2515

Manufacturer: Kuma Stoves
Model: K-251
Tracking No.: 2464
Project No.: 0123WM014E
Run #: 1
Date: 4/12/23

Equipment Numbers:

TRAIN 1 (First Hour emissions)

Sample Component	Reagent	Filter, Probe or Dish #	Weights		
			Final, mg	Tare, mg	Particulate, mg
B. Front filter catch	Filter	E861	119.9	119.4	0.5
C. Rear filter catch	Filter	E862	117.5	117.6	-0.1
D. Probe catch*	Probe	2	115012.8	115012.4	0.4
E. Filter seals catch*	Seals	S469	3351.0	3350.7	0.3

Sub-Total Total Particulate, mg: 1.1

TRAIN 1 (Post First Hour Change-out)

Sample Component	Reagent	Filter, Probe or Dish #	Weights		
			Final, mg	Tare, mg	Particulate, mg
B. Front filter catch	Filter	E863	118.8	119.1	-0.3
C. Rear filter catch	Filter	E864	117.5	117.5	0.0
D. Probe catch*	Probe	15	114340.7	114340.7	0.0
E. Filter seals catch*	Seals	S470	3342.0	3341.6	0.4

Sub-Total Total Particulate, mg: 0.1

Train 1 Aggregate Total Particulate, mg: **1.2**

TRAIN 2

Sample Component	Reagent	Filter, Probe or Dish #	Weights		
			Final, mg	Tare, mg	Particulate, mg
A. Front filter catch	Filter	E865	119.4	119.0	0.4
B. Rear filter catch	Filter	E866	117.7	117.7	0.0
C. Probe catch*	Probe	23	114076.4	114076.4	0.0
D. Filter seals catch*	Seals	S471	3289.8	3289.4	0.4

Total Particulate, mg: **0.8**

AMBIENT

Sample Component	Reagent	Filter # or Probe #	Weights		
			Final, mg	Tare, mg	Particulate, mg
A. Front filter catch*	Filter	E867	119.3	119.1	0.2

Total Particulate, mg: **0.2**

*Particulate catch that results in a negative number, is assumed to be zero for probes and seals, negative numbers for filters are assumed to be part of the seal weight.

Component	Equations:
A. Front filter catch	Final (mg) - Tare (mg) = Particulate, mg
B. Rear filter catch	Final (mg) - Tare (mg) = Particulate, mg
C. Probe catch	Final (mg) - Tare (mg) = Particulate, mg

Technician Signature:_____

Wood Heater Test Results - ASTM E2780 / ASTM E2515

Manufacturer: Kuma Stoves
Model: K-251
Project No.: 0123WM014E
Tracking No.: 2464
Run: 1
Test Date: 04/12/23

Technician Signature:_____

Burn Rate	**2.18**	**kg/hr dry**
Average Tunnel Temperature	87	degrees Fahrenheit
Average Gas Velocity in Dilution Tunnel - vs	18.58	feet/second
Average Gas Flow Rate in Dilution Tunnel - Qsd	12499.1	dscf/hour
Average Delta p	0.096	inches H20
Total Time of Test	177	minutes

	AMBIENT		SAMPLE TRAIN 1		SAMPLE TRAIN 2		FIRST HOUR FILTER (TRAIN 1)	
Total Sample Volume - Vm	39.258	cubic feet	28.367	cubic feet	28.306	cubic feet	9.600	cubic feet
Average Gas Meter Temperature	60	degrees Fahrenheit	70	degrees Fahrenheit	71	degrees Fahrenheit	67	degrees Fahrenheit
Total Sample Volume (Standard Conditions) - Vmstd	40.542	dscf	28.619	dscf	28.443	dscf	9.747	dscf
Total Particulates - m_n	0.2	mg	1.2	mg	0.8	mg	1.1	mg
Particulate Concentration (dry-standard) - C_r/C_s	0.000005	grams/dscf	0.00004	grams/dscf	0.00003	grams/dscf	0.00011	grams/dscf
Total Particulate Emissions - E_T	0.18	grams	1.36	grams	0.86	grams	1.41	grams
Particulate Emission Rate	0.06	grams/hour	0.46	grams/hour	0.29	grams/hour	1.41	grams/hour
Emissions Factor			0.21	g/kg	0.13	g/kg	0.35	g/kg
Difference from Average Total Particulate Emissions			0.25	grams	0.25	grams		

Final Average Results		
Complete Test Run		
Total Particulate Emissions - E_T	1.11	grams
Particulate Emission Rate	**0.38**	**grams/hour**
Emissions Factor	0.17	grams/kg
First Hour Emissions		
Total Particulate Emissions - E_T	1.41	grams
Particulate Emission Rate	1.41	grams/hour
Emissions Factor	0.35	grams/kg
7.5% of Average Total Particulate Emissions	0.08	grams

Quality Checks	Requirement	Measured / Observed: First Hour	Train 1	Train 2	Complies?
Filter Temps, °F	< 90	67	67	66	OK
Filter Face Velocity, fpm	< 30	9.48	9.48	8.78	OK
Dryer Exit Temp, °F	< 80	52	53	53	OK
Leakage Rate, cfm < 4% of avg sample rate or < 0.01 cfm, lesser of the two	0.01	0.000	0.000	0.000	OK
Neg. Probe Weight	=> 0	0.4	0	0	OK
Pro-Rate Variation	< 90 for < 10% of θ	0.00%	0.00%	0.00%	OK
	> 110 for < 10% of θ	3.33%	1.13%	0.56%	OK
	# Readings < 80%	0	0	0	OK
	# Readings > 120%	0	0	0	OK
Ambient Temp, °F (min / max)	< 55	59			OK
	> 90	62			OK
Train Precision One of *A* or *B* must	(*A*) Within 7.5%	22.9%			OK
	(*B*) Within 0.5 g/kg	0.08			
Stove Surface ΔT	Within 125 °F	55			OK
Room Air Velocity	< 50 fpm	<50			OK

Wood Heater Lab Data - ASTM E2780 / ASTM E2515

Manufacturer: Kuma Stoves
Model: K-251
Tracking No.: 2464
Project No.: 0123WM014E
Run #: 1
Date: 4/12/23

Equipment Numbers:

TRAIN 1 (First Hour emissions) Uncorrected

Sample Component	Reagent	Filter, Probe or Dish #	Weights Final, mg	Weights Tare, mg	Weights Particulate, mg
B. Front filter catch	Filter	E861	119.9	119.4	0.5
C. Rear filter catch	Filter	E862	117.5	117.6	0.0
D. Probe catch*	Probe	2	115012.8	115012.4	0.4
E. Filter seals catch*	Seals	S469	3351.0	3350.7	0.3

Sub-Total Total Particulate, mg: 1.2

TRAIN 1 (Post First Hour Change-out)

Sample Component	Reagent	Filter, Probe or Dish #	Weights Final, mg	Weights Tare, mg	Weights Particulate, mg
B. Front filter catch	Filter	E863	118.8	119.1	0.0
C. Rear filter catch	Filter	E864	117.5	117.5	0.0
D. Probe catch*	Probe	15	114340.7	114340.7	0.0
E. Filter seals catch*	Seals	S470	3342.0	3341.6	0.4

Sub-Total Total Particulate, mg: 0.4

Train 1 Aggregate Total Particulate, mg: **1.6**

TRAIN 2

Sample Component	Reagent	Filter, Probe or Dish #	Weights Final, mg	Weights Tare, mg	Weights Particulate, mg
A. Front filter catch	Filter	E865	119.4	119.0	0.4
B. Rear filter catch	Filter	E866	117.7	117.7	0.0
C. Probe catch*	Probe	23	114076.4	114076.4	0.0
D. Filter seals catch*	Seals	S471	3289.8	3289.4	0.4

Total Particulate, mg: **0.8**

AMBIENT

Sample Component	Reagent	Filter # or Probe #	Weights Final, mg	Weights Tare, mg	Weights Particulate, mg
A. Front filter catch*	Filter	E867	119.3	119.1	0.2

Total Particulate, mg: **0.2**

*Particulate catch that results in a negative number, is assumed to be zero for probes and seals, negative numbers for filters are assumed to be part of the seal weight.

Component	Equations:
A. Front filter catch	Final (mg) - Tare (mg) = Particulate, mg
B. Rear filter catch	Final (mg) - Tare (mg) = Particulate, mg
C. Probe catch	Final (mg) - Tare (mg) = Particulate, mg

Technician Signature:_____

Wood Heater Test Results - ASTM E2780 / ASTM E2515

Manufacturer: Kuma Stoves
Model: K-251
Project No.: 0123WM014E
Tracking No.: 2464
Run: 1
Test Date: 04/12/23

Technician Signature:_____

Uncorrected

Burn Rate	**2.18**	**kg/hr dry**
Average Tunnel Temperature	87	degrees Fahrenheit
Average Gas Velocity in Dilution Tunnel - vs	18.58	feet/second
Average Gas Flow Rate in Dilution Tunnel - Qsd	12499.1	dscf/hour
Average Delta p	0.096	inches H20
Total Time of Test	177	minutes

	AMBIENT		SAMPLE TRAIN 1		SAMPLE TRAIN 2		FIRST HOUR FILTER (TRAIN 1)	
Total Sample Volume - Vm	39.258	cubic feet	28.367	cubic feet	28.306	cubic feet	9.600	cubic feet
Average Gas Meter Temperature	60	degrees Fahrenheit	70	degrees Fahrenheit	71	degrees Fahrenheit	67	degrees Fahrenheit
Total Sample Volume (Standard Conditions) - Vmstd	40.542	dscf	28.619	dscf	28.443	dscf	9.747	dscf
Total Particulates - m_n	0.2	mg	1.6	mg	0.8	mg	1.2	mg
Particulate Concentration (dry-standard) - C_r/C_s	0.000005	grams/dscf	0.00006	grams/dscf	0.00003	grams/dscf	0.00012	grams/dscf
Total Particulate Emissions - E_T	0.18	grams	1.88	grams	0.86	grams	1.54	grams
Particulate Emission Rate	0.06	grams/hour	0.64	grams/hour	0.29	grams/hour	1.54	grams/hour
Emissions Factor			0.29	g/kg	0.13	g/kg	0.38	g/kg
Difference from Average Total Particulate Emissions			0.51	grams	0.51	grams		

Final Average Results		
Complete Test Run		
Total Particulate Emissions - E_T	1.37	grams
Particulate Emission Rate	**0.46**	**grams/hour**
Emissions Factor	0.21	grams/kg
First Hour Emissions		
Total Particulate Emissions - E_T	1.54	grams
Particulate Emission Rate	1.54	grams/hour
Emissions Factor	0.38	grams/kg
7.5% of Average Total Particulate Emissions	0.10	grams

Quality Checks	Requirement	Measured / Observed: First Hour	Train 1	Train 2	Complies?
Filter Temps, °F	< 90	67	67	66	OK
Filter Face Velocity, fpm	< 30	9.48	9.48	8.78	OK
Dryer Exit Temp, °F	< 80	52	53	53	OK
Leakage Rate, cfm < 4% of avg sample rate or < 0.01 cfm, lesser of the two	0.01	0.000	0.000	0.000	OK
Neg. Probe Weight	=> 0	0.4	0	0	OK
Pro-Rate Variation	< 90 for < 10% of θ	0.00%	0.00%	0.00%	OK
	> 110 for < 10% of θ	3.33%	1.13%	0.56%	OK
	# Readings < 80%	0	0	0	OK
	# Readings > 120%	0	0	0	OK
Ambient Temp, °F (min / max)	< 55	59			OK
	> 90	62			OK
Train Precision	(*A*) Within 7.5%	37.5%			OK
One of *A* or *B* must	(*B*) Within 0.5 g/kg	0.16			
Stove Surface ΔT	Within 125 °F	55			OK
Room Air Velocity	< 50 fpm	<50			OK

VERSION: 2.4 4/15/2010

Manufacturer: Kuma Stoves
Model: K-251
Date: 4/12/2023
Run: 1
Control #: 2464
Test Duration: 177
Output Category: IV

Appliance Type: Cat (Cat, Non-Cat, Pellet)

Temp. Units F (F or C)
Weight Units lb (kg or lb)

Default Fuel Values

	D. Fir	Oak
HHV (kJ/kg)	19,810	19,887
%C	48.73	50
%H	6.87	6.6
%O	43.9	42.9
%Ash	0.5	0.5

Fuel Data

	D. Fir	
HHV	19,810	kJ/kg
%C	48.73	
%H	6.87	
%O	43.9	
%Ash	0.5	

Wood Moisture (% wet): 17.68
Load Weight (lb wet): 17.20
Burn Rate (dry kg/h): 2.18
Total Particulate Emissions: 1.11 g

Note 1: For other fuels, use the heating value and fuel composition determined by analysis of fuel sample in accordance with Clause 9.2.

Note 2: In cases where the "Fuel Weight Remaining" is the same for three or more readings in a row, a "divide by zero error" will occur in the calculation sheet. In such cases, adjust the weight values by interpolation between the first occurence and the next reading showing a decrease in weight.

	Averages	0.06	9.56	#DIV/0!	418.93	60.49
					Temp. (ºF)	
Elapsed Time (min)	Fuel Weight Remaining (lb)	Flue Gas Composition (%) CO	CO_2	O_2	Flue Gas	Room Temp
0	17.20	0.00	9.65		487.0	60.0
1	17.10	0.00	12.22		483.0	60.0
2	16.90	0.00	11.28		425.0	61.0
3	16.70	0.00	10.65		417.0	60.0
4	16.50	0.00	9.65		437.0	60.0
5	16.30	0.09	12.22		459.0	60.0
6	16.10	0.03	11.28		471.0	60.0
7	16.00	0.00	10.65		475.0	60.0
8	15.80	0.00	11.72		479.0	60.0
9	15.60	0.00	11.61		482.0	59.0
10	15.40	0.00	11.55		480.0	60.0
11	15.20	0.00	11.26		480.0	60.0
12	15.10	0.00	11.04		480.0	59.0
13	14.90	0.00	11.26		483.0	60.0
14	14.70	0.00	11.69		485.0	60.0
15	14.50	0.00	12.21		488.0	60.0
16	14.30	0.21	13.19		494.0	60.0
17	14.10	0.35	13.42		498.0	60.0
18	13.90	0.29	13.38		500.0	61.0

19	13.70	0.13	13.08		501.0	60.0
20	13.50	0.08	13.13		501.0	60.0
21	13.30	0.38	13.44		504.0	60.0
22	13.10	0.46	13.62		506.0	60.0
23	12.80	0.51	13.74		508.0	60.0
24	12.60	0.62	13.87		508.0	60.0
25	12.40	0.71	13.92		509.0	60.0
26	12.20	0.78	13.99		510.0	60.0
27	12.00	0.79	13.86		512.0	60.0
28	11.70	0.75	13.86		511.0	60.0
29	11.50	0.70	13.82		510.0	60.0
30	11.30	0.54	13.77		509.0	60.0
31	11.10	0.43	13.70		506.0	60.0
32	10.90	0.33	13.67		506.0	60.0
33	10.70	0.34	13.54		503.0	60.0
34	10.50	0.31	13.57		501.0	60.0
35	10.30	0.30	13.53		500.0	61.0
36	10.20	0.27	13.61		499.0	61.0
37	10.00	0.32	13.66		497.0	61.0
38	9.80	0.38	13.63		496.0	61.0
39	9.60	0.31	13.60		495.0	61.0
40	9.40	0.26	13.39		493.0	61.0
41	9.20	0.20	13.34		492.0	61.0
42	9.10	0.17	13.12		491.0	60.0
43	8.90	0.00	13.12		489.0	60.0
44	8.80	0.00	12.90		488.0	61.0
45	8.60	0.00	12.67		484.0	61.0
46	8.50	0.00	12.48		481.0	61.0
47	8.30	0.00	12.52		480.0	61.0
48	8.20	0.01	12.69		478.0	61.0
49	8.00	0	12.96		478	61
50	7.80	0	13.05		477	60
51	7.70	0	13.02		476	61
52	7.50	0	13.15		478	61
53	7.40	0	13.15		477	60
54	7.20	0	13.06		476	60
55	7.10	0	13.12		476	61
56	6.90	0	13.24		475	60

57	6.80	0	13.22		476	60
58	6.60	0	13.2		476	61
59	6.50	0	13.17		475	61
60	6.40	0	13.07		475	60
61	6.20	0	13.12		474	60
62	6.10	0	12.67		473	60
63	5.90	0	12.59		472	60
64	5.80	0	12.3		468	60
65	5.70	0	12.28		466	60
66	5.60	0	12.08		466	60
67	5.40	0	11.91		465	60
68	5.30	0	11.58		461	60
69	5.20	0	11.18		458	60
70	5.10	0	10.92		456	61
71	5.00	0	10.99		454	60
72	4.90	0	10.96		454	61
73	4.80	0	10.84		453	61
74	4.70	0	10.73		451	61
75	4.60	0	10.6		451	62
76	4.50	0	10.43		448	61
77	4.40	0	10.3		447	60
78	4.30	0	10.17		445	61
79	4.20	0	9.98		442	62
80	4.10	0	9.77		439	62
81	4.00	0	9.66		436	61
82	3.90	0	9.6		434	61
83	3.90	0	9.62		432	62
84	3.80	0	9.52		430	61
85	3.70	0	9.56		429	61
86	3.60	0	9.62		427	61
87	3.50	0	9.46		425	61
88	3.50	0	9.44		423	60
89	3.40	0	9.41		422	61
90	3.30	0	9.35		419	61
91	3.20	0	9.27		418	62
92	3.20	0	9.23		417	61
93	3.10	0	9.21		414	61
94	3.00	0	9.18		413	61

95	2.90	0	9.16		412	61
96	2.90	0	9.08		411	61
97	2.80	0	8.93		409	61
98	2.70	0	8.88		407	61
99	2.70	0	8.82		406	61
100	2.60	0	8.79		405	61
101	2.60	0	8.73		404	60
102	2.50	0	8.64		402	61
103	2.40	0	8.49		400	61
104	2.40	0	8.37		398	60
105	2.30	0	8.34		397	61
106	2.30	0	8.36		395	61
107	2.20	0	8.34		393	61
108	2.20	0	8.23		392	61
109	2.10	0	7.99		391	61
110	2.10	0	7.91		390	61
111	2.00	0	7.94		388	61
112	2.00	0	7.92		387	61
113	1.90	0	7.96		386	60
114	1.90	0	7.92		386	61
115	1.80	0	7.82		386	60
116	1.80	0	7.55		385	61
117	1.70	0	7.12		383	61
118	1.70	0	6.8		379	60
119	1.60	0	6.74		376	61
120	1.60	0	6.7		374	61
121	1.60	0	6.68		372	60
122	1.50	0	6.58		371	60
123	1.50	0	6.34		370	60
124	1.50	0	6.22		368	60
125	1.40	0	6.18		366	60
126	1.40	0	6.25		364	60
127	1.40	0	6.28		362	60
128	1.40	0	6.28		360	60
129	1.30	0	6.34		358	60
130	1.30	0	6.36		356	60
131	1.30	0	6.41		354	60
132	1.20	0	6.44		353	61

133	1.20	0	6.4		351	61
134	1.20	0	6.29		350	61
135	1.20	0	6.31		349	60
136	1.10	0	6.35		349	60
137	1.10	0	6.4		347	61
138	1.10	0	6.4		346	60
139	1.00	0	6.4		345	61
140	1.00	0	6.31		344	61
141	1.00	0	6.03		341	60
142	1.00	0	5.88		340	60
143	0.90	0	5.88		339	60
144	0.90	0	5.98		338	60
145	0.90	0	6.02		337	61
146	0.90	0	5.94		336	61
147	0.80	0	5.96		336	60
148	0.80	0	5.98		336	60
149	0.80	0	6.13		336	61
150	0.80	0	6.18		336	61
151	0.70	0	6.24		335	60
152	0.70	0	6.33		335	61
153	0.70	0	6.31		335	61
154	0.60	0	6.32		337	61
155	0.60	0	6.42		337	61
156	0.60	0	6.1		337	60
157	0.60	0	6.02		336	60
158	0.50	0	6.02		336	60
159	0.50	0	5.96		335	60
160	0.50	0	5.96		335	60
161	0.50	0	6.01		334	61
162	0.40	0	5.96		334	61
163	0.40	0	6.16		335	61
164	0.40	0	6.14		335	60
165	0.40	0	6		334	60
166	0.30	0	6.03		334	60
167	0.30	0	6.06		334	60
168	0.30	0	6.13		334	61
169	0.20	0	6.19		334	60
170	0.20	0	6.2		335	60

171	0.20	0	6.22		335	60
172	0.20	0	6.24		336	61
173	0.10	0	6.18		335	60
174	0.10	0	6.18		335	61
175	0.10	0	6.18		336	60
176	0.10	0	6.11		336	61
177	0.00	0	6.05		336	61

OMNI-Test Laboratories, Inc.

Manufacturer:	Kuma Stoves
Model:	K-251
Date:	04/12/23
Run:	1
Control #:	2464
Test Duration:	177
Output Category:	IV

Technicians: _____

_____

_____

Test Results in Accordance with CSA B415.1-10

	HHV Basis	LHV Basis
Overall Efficiency	74.8%	80.8%
Combustion Efficiency	99.5%	99.5%
Heat Transfer Efficiency	75%	81.3%

Output Rate (kJ/h)	32,271	30,612	**(Btu/h)**
Burn Rate (kg/h)	2.18	4.80	**(lb/h)**
Input (kJ/h)	43,140	40,923	**(Btu/h)**

Test Load Weight (dry kg)	6.42	14.16	**dry lb**
MC wet (%)	17.68		
MC dry (%)	21.48		
Particulate (g)	1.11		
CO (g)	69		
Test Duration (h)	2.95		

Emissions	Particulate	CO
g/MJ Output	0.01	0.72
g/kg Dry Fuel	0.17	10.67
g/h	0.38	23.24
lb/MM Btu Output	0.03	1.67

Air/Fuel Ratio (A/F)	11.61

VERSION: **2.4** **4/15/2010**

OMNI-Test Laboratories, Inc.

ASTM E2780 Wood Heater Run Sheets

Client: Kuma Project Number: 0123WM014E Run Number: 1
Model: K-251 Tracking Number: 2464 Date: 04/12/2023
Test Crew: Tony Tong
OMNI Equipment ID numbers: 00637, 00709, 00283A

ASTM E2515 Lab Sheet

Assembled By: Tony Tong

Date/Time in Dessicator: 04/12/23, 15:45

	Weighing #1	Weighing #2	Weighing #3	Weighing #4	Weighing #5
Date/Time:	04/18/23 16:00	04/20/23 7:40	04/24/23 7:30		
R/H %:	17.3	7.9	8.5		
Temp:	67.4	66.0	66.3		
200 mg Audit:	200.1	200.1	200.0		
2 g Audit:	2000.3	2000.3	2000.1		
100 g Audit:	99997.8	99997.9	99997.9		
Initials:	TT	TT	TT		

Train	Element	ID #	Tare (mg)	Weight (mg)	Weight (mg)	Weight (mg)	Weight (mg)	Weight (mg)
A (First Hour)	Front Filter	E861	119.4	120.0	119.7	119.9		
	Rear Filter	E862	117.6	117.6	117.5			
	Probe	2	115012.4	115012.7	115012.8			
	O-Ring Set	S469	3350.7	3351.1	3351.0			
A (Remainder)	Front Filter	E863	119.1	119.0	118.8			
	Rear Filter	E864	117.5	117.4	117.5			
	Probe	15	114340.7	114340.7	114340.7			
	O-Ring Set	S470	3341.6	3342.2	3342.0			
B	Front Filter	E865	119.0	119.4	119.4			
	Rear Filter	E866	117.7	117.7	117.7			
	Probe	23	114076.4	114076.6	114076.4			
	O-Ring Set	S471	3289.4	3289.9	3289.8			
BG	Filter	E867	119.1	119.2	119.3			

Technician Signature: Tony Tong Date: 04/27/23

OMNI-Test Laboratories, Inc.

ASTM E2780 Wood Heater Run Sheets

Client: Kuma Project Number: 0123WM014E Run Number: 1
Model: K-251 Tracking Number: 2464 Date: 04/12/2023
Test Crew: Tony Tang, Riley Tiegs
OMNI Equipment ID numbers: 00335, 00336, 00594, 00185, 00322

Wood Heater Run Notes

Air Control Settings

Primary:

Fully Open

Secondary: Fixed

Tertiary/Pilot: N/A

Fan: Fan off for first 5 min then on high

Preburn Notes

Time	Notes
10:43	Added 10.0 lbs fuel plus 3.0 lbs coal

Test Notes

Sketch test fuel configuration:

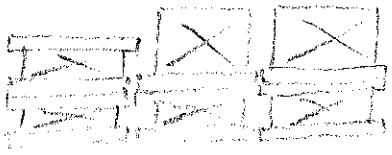

Start up procedures & Timeline:

Bypass: used to load
Fuel loaded by: 85
Door closed at: 90
Primary air: fully open

Notes: fan off for first 5 min then set to high

Time	Notes
12:04	started to sample
13:04	First hour filters change
15:01	Test finish

Technician Signature: Tony Tang Date: 04/12/2023

ASTM E2780 Wood Heater Run Sheets

Client: Kuma Project Number: 0123WM014E Run Number: 1
Model: K-251 Tracking Number: 2464 Date: 04/12/2023
Test Crew: Tom Tong, Riley Tiegs
OMNI Equipment ID numbers: 00594, 00410, 00716, 00677, 00721, 00255

Wood Heater Supplemental Data

Start Time: 12:04 Booth #: E1
Stop Time: 15:01

Stack Gas Leak Check:
Initial: No Leak Final: No Leak

Sample Train Leak Check:
A: 0.000 @ 17.02" Hg A, 0.000 @ 17.06" Hg
B: 0.000 @ 16.70" Hg

Calibrations: Span Gas CO_2: 16.94 % CO: 4.32 % CO 500 ppm

	Pre Test		Post Test	
	Zero	Span	Zero	Span
Time	11:37	11:39	15:10	15:12
CO_2	0.00	16.91	0.00	16.83
CO	0.00	4.33	0.00	4.36
CO ppm	0.0	492	0.0	493

Air Velocity (ft/min): Initial: <50 Final: <50
Scale Audit (lbs): Initial: 10 Final: 10
Pitot Tube Leak Test: Initial: No Leak Final: No Leak
Stack Diameter (in): 6
Induced Draft: 0.000
% Smoke Capture: 100
Flue Pipe Cleaned Prior to First Test in Series:
Date: 04/04/23 Initials: TT

Tunnel Traverse		
Microtector Reading	dP (in H_2O)	T(°F)
1	0.072	84
2	0.090	84
3	0.090	84
4	0.068	84
5	0.072	84
6	0.088	84
7	0.086	84
8	0.64	84
Center:		
	0.099	84

	Initial	Middle	Ending
P_b (in/Hg)	30.11	30.11	30.11
RH (%)	47	47	46
Ambient (°F)	60	61	61

Background Filter Volume: 39.258 ft^3

Tunnel Static Pressure (in H_2O):	
Beginning of Test	End of Test
-0.32	-0.32

Technician Signature: [signature] Date: 04/12/23

OMNI-Test Laboratories, Inc. **ASTM E2780 Wood Heater Run Sheets**

Client: Kuma Project Number: 0123WM014E Run Number: 1

Model: K-251 Tracking Number: 2464 Date: 04/12/2023

Test Crew: Tony Tong

OMNI Equipment ID numbers: 00340, 00431, T61, 00353

Wood Heater Fuel Data

Fuel: Douglas fir, untreated and air dried, standard grade or better dimensional lumber

Pre-Burn Fuel

Calibration: Cal Value (1) = 12% Actual Reading 12.5

Cal Value (2) = 22% Actual Reading 22.4

Piece:	Length:	Reading:	Piece:	Length:	Reading:
1	12 in	21.0	7	16 in	23.8
2	12 in	22.1	8	in	
3	12 in	22.8	9	in	
4	12 in	20.1	10	in	
5	16 in	22.6	11	in	
6	16 in	24.5	12	in	

Total Pre-Burn Fuel Weight: 10.0 Pre-Burn Fuel Average Moisture: _____

Time (clock): 8:30 Room Temperature (F): 59 Initials: TT

Test Fuel

Firebox Volume (ft³): ~~2.54~~ 2.56 Test Fuel Piece Length (in): 17.25"

Load Weight Range (lb): (~~16.13, 19.74~~) (13.44, 4.30) Total Wet Fuel Load Weight (lb): 17.2

Fuel Type & Amount: 2 x 4: 4 4 x 4: 2

Weight (with spacers): 8.5 lbs Weight (with spacers): 8.7 lbs

Piece:	Weight (lbs):	Moisture Readings (%DB):			Fuel Type:
1	1.6	21.9	20.4	20.6	2x4
2	1.7	22.1	21.9	22.1	2x4
3	1.7	21.4	23.8	24.2	2x4
4	1.7	20.4	21.1	23.4	2x4
5	3.9	24.7	24.5	23.1	4x4
6	4.3	23.8	23.4	22.7	4x4
7					

Spacer Moisture Readings (%DB)

10.9	18.0	12.4	12.5	13.7	15.9	11.4	11.4
12.4	12.4	12.8	12.1	12.8	16.8	12.0	12.1
11.6	13.5	12.8	13.2				

Time (clock): 9:00 Room Temperature (F): 59 Initials: TT

Technician Signature: Tony Tong Date: 04/12/2023

Run 2

Medium Low Burn (Category II)

Wood Heater Preburn Data - ASTM E2780

Run:	2

Technician Signatu

Manufacturer:	Kuma Stoves
Model:	K-251
Tracking No.:	2464
Project No.:	0123WM014E
Test Date:	4/13/23
Beginning Clock Time:	9:51

Preburn Fuel Data

4 pieces @ 12 inches
3 pieces @ 16 inches
pieces @ inches

Fuel Moisture Readings (% DB):

23.2	21.7	20.5	21.5	23.3	23.0	23.0

Avg Preburn Moisture (% DB) **22.31**

Coal Bed Range (lb):	**3.5** (min)	**4.4** (max)

			Temperatures (°F)								
Elapsed Time (min)	Scale (lb)	Stack Draft (in H_2O)	FB Top	FB Bottom	FB Back	FB Left	FB Right	Cat Exit	Avg. FB	Stack	Ambient
0	7.5	-0.07	652	345	424	463	444	3218	465.4	485	60
1	7.3	-0.064	657	346	429	466	445	3218	468.7	441	61
2	7.2	-0.061	660	348	432	468	447	3218	471.1	403	60
3	7.1	-0.058	657	349	435	470	449	3218	472	381	60
4	7	-0.058	650	350	435	472	451	3218	471.6	364	59
5	7	-0.056	641	352	435	473	452	3218	470.3	351	59
6	6.9	-0.055	631	353	433	473	453	3218	468.5	341	60
7	6.8	-0.055	621	354	430	473	453	3218	466.1	333	60
8	6.7	-0.054	611	354	428	473	453	3218	464	327	60
9	6.7	-0.053	603	355	425	472	453	3218	461.7	322	60
10	6.6	-0.052	596	355	423	472	453	3218	459.7	318	61
11	6.5	-0.052	590	356	420	471	453	3218	458	314	60
12	6.4	-0.052	586	356	416	471	453	3218	456.3	312	60
13	6.3	-0.053	582	356	417	470	453	3218	455.7	311	60
14	6.3	-0.052	580	356	413	470	452	3218	454.3	310	60
15	6.2	-0.051	579	356	410	469	452	3218	453.4	310	60
16	6.1	-0.05	580	356	409	468	452	3218	453	309	60
17	6	-0.052	581	356	406	468	452	3218	452.6	310	60
18	5.9	-0.051	584	356	405	467	451	3218	452.5	310	60
19	5.8	-0.052	587	355	404	467	451	3218	452.9	310	60
20	5.7	-0.052	590	355	402	466	451	3218	453	310	61
21	5.6	-0.052	594	355	401	466	450	3218	453.2	311	60
22	5.5	-0.052	597	355	401	466	450	3218	453.8	312	60
23	5.5	-0.052	600	355	401	465	450	3218	454	313	60
24	5.4	-0.052	604	355	401	465	449	3218	454.7	314	60
25	5.2	-0.052	607	355	400	464	449	3218	455	316	60
26	5.2	-0.051	610	355	402	464	449	3218	455.8	315	60
27	5.1	-0.051	613	355	401	463	448	3218	456.1	314	60
28	5	-0.05	615	355	401	463	448	3218	456.4	313	60
29	4.9	-0.051	617	355	402	463	448	3218	456.8	312	60
30	4.8	-0.051	618	355	401	463	448	3218	456.9	312	60
31	4.7	-0.05	618	355	401	463	448	3218	457.1	310	60
32	4.7	-0.049	617	356	400	463	448	3218	456.7	308	60
33	4.6	-0.049	615	356	400	463	448	3218	456.2	305	60
34	4.5	-0.049	611	356	400	463	448	3218	455.5	303	60
35	4.5	-0.049	606	357	401	462	448	3218	454.8	301	61
36	4.4	-0.048	601	357	401	462	448	3218	453.8	298	60
37	4.4	-0.049	596	358	400	462	448	3218	452.6	294	60
38	4.3	-0.047	590	358	401	462	448	3218	451.7	291	60
39	4.3	-0.048	584	358	400	462	448	3218	450.4	289	60
40	4.2	-0.046	579	358	399	462	447	3218	449	287	60
41	4.2	-0.047	574	358	399	462	447	3218	447.9	284	60
42	4.1	-0.046	569	358	397	462	447	3218	446.7	282	60

Wood Heater Preburn Data - ASTM E2780

Run: 2

Technician Signatu

Manufacturer: Kuma Stoves
Model: K-251
Tracking No.: 2464
Project No.: 0123WM014E
Test Date: 4/13/23
Beginning Clock Time: 9:51

Preburn Fuel Data

4 pieces @ 12 inches
3 pieces @ 16 inches
pieces @ inches

Fuel Moisture Readings (% DB):

23.2	21.7	20.5	21.5	23.3	23.0	23.0

Avg Preburn Moisture (% DB) **22.31**

Coal Bed Range (lb):	**3.5** (min)	**4.4** (max)

			Temperatures (°F)								
Elapsed Time (min)	Scale (lb)	Stack Draft (in H_2O)	FB Top	FB Bottom	FB Back	FB Left	FB Right	Cat Exit	Avg. FB	Stack	Ambient
43	4.1	-0.046	564	358	396	462	447	3218	445.5	279	61
44	4	-0.045	558	358	395	462	447	3218	444	276	60
45	4	-0.043	551	358	396	462	447	3218	442.9	273	60
46	4	-0.043	545	357	395	462	447	3218	441.3	270	60
47	3.9	-0.042	539	357	393	462	447	3218	439.7	267	60
48	3.9	-0.045	533	357	387	462	447	3218	437.1	265	60
49	3.9	-0.042	527	357	385	461	447	3218	435.3	263	60
50	3.9	-0.042	520	357	385	461	446	3218	433.9	260	60
51	3.8	-0.042	514	357	384	461	446	3218	432.2	257	60
52	3.8	-0.042	507	357	381	460	445	3218	430	254	60
53	3.8	-0.041	500	357	379	459	445	3218	428.1	252	61
54	3.8	-0.041	493	357	378	459	444	3218	426.2	250	61
55	3.7	-0.04	487	357	378	458	443	3218	424.6	248	60
56	3.7	-0.041	481	357	375	458	442	3218	422.6	246	60
57	3.7	-0.04	475	357	376	457	442	3218	421.5	245	60
58	3.7	-0.04	470	357	375	456	441	3218	419.9	243	60
59	3.7	-0.04	465	358	372	455	440	3218	418	241	60
60	3.7	-0.039	460	358	371	455	440	3218	416.7	239	60

Wood Heater Test Fuel Data - ASTM E2780

Manufacturer :	Kuma Stoves
Model :	K-251
Tracking No. :	2464
Project No. :	0123WM014E
Test Date :	4/13/2023
Run No. :	2

Moisture Meter Cal	
Cal Block	Measured
12.0	12.0
22.0	22.0

Firebox Volume :	2.56	ft3
% 2 x 4 Required :	35 - 65	%
Ideal Fuel Weight :	17.92	lb.
Minimum Fuel Weight :	16.13	lb.
Maximum Fuel Weight :	19.71	lb.

Fuel Piece Data

PC #	Weight, lb	Size	Length, In	Moisture Readings, Dry Basis %			Average MC, % db	Dry Weight, lb.	Volume, ft3	Wet Weights, lb 4 x 4	Wet Weights, lb 2 x 4	Dry Weights, lb 4 x 4	Dry Weights, lb 2 x 4
1	1.60	2x4	17.25	22.8	20.8	20.0	21.2	1.32	0.0524		1.6		1.32
2	1.80	2x4	17.25	23.8	23.1	23.3	23.4	1.46	0.0524		1.8		1.46
3	1.90	2x4	17.25	23.8	23.2	23.0	23.3	1.54	0.0524		1.9		1.54
4	1.90	2x4	17.25	23.2	22.7	22.6	22.8	1.55	0.0524		1.9		1.55
5	4.30	4x4	17.25	22.3	23.8	24.6	23.6	3.48	0.1223	4.3		3.48	
6	4.10	4x4	17.25	23.4	22.7	21.9	22.7	3.34	0.1223	4.1		3.34	
7													
8													
9													

Spacer Data

Moisture Readings, Dry Basis % (One reading per spacer)								
13.4	11.4	16.1	10.4	11.1	21.6	11.1	10.9	
17.1	11.8	10.7	11.8	11.0	11.6	17.0	15.1	
11.0	16.9	17.8	18.3					

Avg : 13.8

Assembled Crib Fuel Load with Spacers Attatched

PC #	Weight, lb with Spacers	Size	4 x 4s	2 x 4s
1	2.00	2x4		2.0000
2	2.20	2x4		2.2000
3	2.30	2x4		2.3000
4	2.30	2x4		2.3000
5	4.20	4x4	4.20	
6	4.50	4x4	4.50	
7				
8				
9				

Combined Mass of 4 x 4s	8.7	lb
Combined Mass of 2 x 4s	8.8	lb
Total Wet Mass of Fuel Load	**17.5**	lb

Fuel Load Properties

Type	*Number of Pieces*	*Wet Weight, lb.*	*Dry Weight, lb.*	*Fuel Loading Density, lb/ft³* Wet Basis	*Fuel Loading Density, lb/ft³* Dry Basis	Dry Fuel Density, lb/ft³	Wet Fuel Density, lb/ft³	*Moisture, %* Dry Basis	*Moisture, %* Wet Basis
2 x 4	4	7.2	5.87	6.84	5.61	27.94	34.35	21.88	17.95
4 x 4	2	8.4	6.82						
Spacers	20	1.9	1.67						
Totals		17.5	14.36						

Compliance Checks

	Fuel Load, Wet Lb.	Load Density, lb/ft³ of FB vol	Fuel Density, lb/ft³	% of Fuel load mass which is 2x4	Fuel Load Peices Mositure, % db
Measured	17.5	6.84	27.94	50	22.8
Required	16.1 - 19.7	6.3 - 7.7	25 - 36	35 - 65	19 -25
Complies ?	Yes	Yes	Yes	Yes	Yes

Wood Heater Test Data

u

Run: 2

Manufacturer: Kuma Stoves
Model: K-251
Tracking No.: 2464
Project No.: 0123WM014E
Test Date: 13-Apr-23
Beginning Clock Time: 10:52

Total Sampling Time: 377 min
Recording Interval: 1 min
Tunnel Diameter: 6
Background Sample Volume: 69.841 cubic feet

PM Control Modules: 335, 336
Dilution Tunnel MW(dry): 29.00 lb/lb-mole
Dilution Tunnel MW(wet): 28.78 lb/lb-mole
Dilution Tunnel H2O: 2.00 percent
Dilution Tunnel Static: -0.320 "H2O
Tunnel Area: 0.19635 ft2
Pitot Tube Cp: 0.99

Avg. Tunnel Velocity: 18.34 ft/sec.
Initial Tunnel Flow: 214.6 scfm
Average Tunnel Flow: 209.6 scfm
Post-Test Leak Check (1st Hr): 0.000 cfm @ 4 in. Hg
Post-Test Leak Check (1): 0.000 cfm @ 4 in. Hg
Post-Test Leak Check (2): 0.000 cfm @ 4 in. Hg
Average Test Piece Fuel Moisture: 21.88 Dry Basis %

Technician Signature:_____

Meter Box Y Factor: 1.004 (1) 1.002 (2) 1.012 (Amb)

Export to PDF

Barometric Pressure:	Begin	Middle	End	Average
	30.07	30.02	29.96	30.02

Room Air Velocity, fpn
0

OMNI Equipment Numbers: _____

Velocity Traverse Data

	Pt.1	Pt.2	Pt.3	Pt.4	Pt.5	Pt.6	Pt.7	Pt.8	Center	
Initial dP	0.068	0.090	0.090	0.062	0.080	0.088	0.090	0.072	0.099	"H2O
Temp:	76	76	76	76	76	76	76	76	76	°F

V_{strav} 18.80 ft/sec V_{scent} 20.97 ft/sec F_p 0.897

qwq

	Particulate Sampling Data														Fuel Weight (lb)		Temperature Data (°F)													Stack Gas Data		
Elapsed Time (min)	Gas Meter 1 (ft^3)	Gas Meter 2 (ft^3)	Sample Rate 1 (cfm)	Sample Rate 2 (cfm)	Orifice dH 1 ("H_2O)	Meter 1 Temp (°F)	Meter 1 Vacuum ("Hg)	Orifice dH 2 ("H_2O)	Meter 2 Temp (°F)	Meter 2 Vacuum ("Hg)	Dilution Tunnel (°F)	Dilution Tunnel Center dP	Pro. Rate 1	Pro. Rate 2	Scale Reading	Weight Change	Firebox Top	Firebox Bottom	Firebox Back	Firebox Left	Firebox Right	Avg. Stove Surface (Tot = ΔT)	Catalyst Exit	Stack	Filter 1	Dryer Exit 1	Filter 2	Dryer Exit 2	Ambient	Draft ("H_2O)	CO_2 (%)	CO (%)
Tot / Avg	**60.54**	**60.47**	**0.16**	**0.16**	**1.28**	**72.68**	**3.05**	**1.00**	**72.81**	**2.29**	**74.53**	**0.09**	**100.05**	**100.05**		-17.5	503	303	333	361	376	**74**	884	265	64	52	64	53	62	-0.044	8	0
Minimum			0.15	0.16	0.65	64.00	2.08	0.13	65.00	1.80	70.00	0.08	96.00	95.15	0.00	-0.200	335	274	245	299	315	328	625	191	60	43	60	45	59	-0.069	2	0
Max			0.16	0.16	1.30	76.00	3.14	1.07	76.00	2.50	122.00	0.10	105.93	106.73	17.50	0.100	802	361	387	455	440	419	1332	366	65	54	65	55	64	-0.032	13	1.140
0	0.000	0.000			0.65	64	2.08	0.13	65	2.5	112	0.095			17.5		453	360	370	455	440	416	767	346	60	47	60	48	60	-0.059	1.68	0.39
1	0.151	0.160	0.15	0.16	1.30	64	2.74	1.07	65	2.3	122	0.096	99	105	17.4	-0.1	441	355	370	455	440	412	697	348	62	44	61	45	60	-0.051	1.64	0.3
2	0.311	0.322	0.16	0.16	1.29	64	2.74	1.07	65	2.3	88	0.099	100	101	17.3	-0.1	431	360	385	455	439	414	631	289	62	43	61	45	60	-0.043	3.03	0.63
3	0.469	0.484	0.16	0.16	1.28	64	2.71	1.06	65	2.3	81	0.091	102	105	17.3	0	431	360	387	452	436	413	634	264	62	43	61	45	60	-0.044	3.09	0.06
4	0.628	0.642	0.16	0.16	1.29	64	2.73	1.00	65	2.2	78	0.093	102	101	17.2	-0.1	429	361	385	447	433	411	660	254	62	43	61	45	60	-0.043	2.54	0.04
5	0.786	0.800	0.16	0.16	1.28	64	2.72	1.00	65	2.2	76	0.094	100	100	17.2	0	426	360	383	443	429	408	669	247	62	43	61	45	60	-0.043	2.44	0.04
6	0.946	0.958	0.16	0.16	1.28	64	2.7	0.99	65	2.2	75	0.097	100	99	17.1	-0.1	423	360	380	438	425	405	669	243	62	43	61	45	60	-0.043	2.37	0.03
7	1.104	1.116	0.16	0.16	1.27	64	2.71	0.99	65	2.2	75	0.090	102	102	17.1	0	419	360	377	432	420	402	666	241	62	43	61	45	60	-0.043	2.37	0.03
8	1.262	1.272	0.16	0.16	1.28	64	2.69	0.99	65	2.2	74	0.091	102	100	17.1	0	415	360	373	427	416	398	663	239	62	43	61	45	60	-0.042	2.46	0.03
9	1.420	1.428	0.16	0.16	1.30	64	2.73	0.70	65	1.8	74	0.101	97	95	17.0	-0.1	412	359	369	421	411	394	662	238	62	43	61	45	60	-0.043	2.62	0.04
10	1.580	1.585	0.16	0.16	1.29	64	2.73	1.00	65	2.2	73	0.096	100	98	17.0	0	408	358	366	416	406	391	657	238	62	43	62	45	60	-0.042	3.09	0.04
11	1.739	1.743	0.16	0.16	1.29	64	2.72	1.01	65	2.2	73	0.097	99	98	17.0	0	405	357	362	410	401	387	651	238	62	43	62	45	60	-0.042	3.19	0.04
12	1.898	1.902	0.16	0.16	1.30	65	2.72	1.00	65	2.2	73	0.095	100	100	16.9	-0.1	403	357	358	404	397	384	653	238	62	44	62	45	60	-0.043	3.46	0.05
13	2.058	2.060	0.16	0.16	1.30	65	2.72	1.00	65	2.2	73	0.098	99	98	16.9	0	401	356	354	399	392	380	663	240	62	44	62	45	60	-0.043	3.79	0.06
14	2.217	2.219	0.16	0.16	1.29	65	2.72	1.00	65	2.2	73	0.098	98	99	16.8	-0.1	402	355	349	394	388	378	676	243	62	44	62	45	60	-0.043	4.07	0.06
15	2.376	2.377	0.16	0.16	1.29	65	2.7	1.00	66	2.2	73	0.091	102	101	16.8	0	404	353	345	388	383	375	689	247	62	44	62	46	60	-0.044	4.32	0.07
16	2.535	2.536	0.16	0.16	1.29	65	2.71	1.00	66	2.2	73	0.089	103	103	16.7	-0.1	406	352	342	383	379	372	698	250	62	44	62	46	60	-0.044	4.73	0.07
17	2.695	2.694	0.16	0.16	1.29	65	2.71	0.99	66	2.2	73	0.097	100	98	16.7	0	408	351	338	378	375	370	708	255	62	44	62	46	60	-0.045	5.98	0.06
18	2.854	2.852	0.16	0.16	1.29	65	2.72	1.00	66	2.2	73	0.098	98	98	16.6	-0.1	412	350	334	374	371	368	717	259	62	44	62	46	60	-0.046	6.34	0.05
19	3.013	3.011	0.16	0.16	1.29	66	2.7	1.00	66	2.2	72	0.093	101	101	16.5	-0.1	417	349	331	370	367	367	730	261	62	44	62	46	60	-0.046	5.3	0.05
20	3.172	3.169	0.16	0.16	1.29	66	2.7	1.00	66	2.2	73	0.089	103	103	16.5	0	422	348	327	365	363	365	735	262	62	45	62	46	60	-0.046	4.78	0.05
21	3.332	3.327	0.16	0.16	1.28	66	2.7	1.00	66	2.2	73	0.092	102	101	16.4	-0.1	424	345	324	361	359	363	733	262	62	45	62	46	60	-0.045	4.55	0.04
22	3.492	3.486	0.16	0.16	1.29	66	2.7	0.99	67	2.2	74	0.093	102	101	16.4	0	425	342	321	357	356	360	730	261	63	45	62	46	60	-0.046	4.56	0.05
23	3.651	3.644	0.16	0.16	1.28	66	2.7	1.00	67	2.2	73	0.088	104	103	16.3	-0.1	426	339	317	353	353	358	728	261	63	45	62	47	60	-0.047	4.51	0.05
24	3.810	3.803	0.16	0.16	1.29	66	2.69	1.00	67	2.2	73	0.094	100	100	16.3	0	426	338	314	349	349	355	728	261	63	45	62	47	60	-0.045	4.61	0.05
25	3.969	3.961	0.16	0.16	1.29	67	2.7	0.99	67	2.2	73	0.086	105	104	16.2	-0.1	427	336	311	346	346	353	732	262	63	45	62	47	60	-0.046	4.79	0.05
26	4.129	4.119	0.16	0.16	1.29	67	2.69	1.00	67	2.2	74	0.086	105	104	16.1	-0.1	428	335	308	342	343	351	737	262	63	45	62	47	60	-0.046	4.85	0.06
27	4.289	4.278	0.16	0.16	1.28	67	2.7	0.99	67	2.2	73	0.098	99	98	16.1	0	428	334	306	339	340	349	741	262	63	46	62	47	59	-0.045	4.79	0.06
28	4.448	4.436	0.16	0.16	1.29	67	2.7	1.00	67	2.2	73	0.088	103	103	15.9	-0.2	428	333	303	336	338	348	745	264	63	46	62	47	60	-0.047	4.88	0.06
29	4.607	4.596	0.16	0.16	1.29	67	2.7	1.00	68	2.2	73	0.094	100	101	16.0	0.1	429	331	300	333	335	346	750	264	63	46	62	47	60	-0.047	4.9	0.07
30	4.768	4.754	0.16	0.16	1.29	67	2.7	0.99	68	2.2	74	0.092	103	101	15.9	-0.1	430	330	298	330	333	344	761	265	63	46	62	48	60	-0.047	5.33	0.08
31	4.927	4.912	0.16	0.16	1.29	67	2.69	0.99	68	2.2	73	0.096	99	98	15.8	-0.1	425	328	297	327	331	342	767	269	63	46	62	48	60	-0.046	7.19	0.06
32	5.086	5.071	0.16	0.16	1.28	68	2.69	0.99	68	2.2	73	0.090	102	102	15.7	-0.1	426	327	294	325	329	340	779	272	63	46	62	48	60	-0.048	7.3	0.06
33	5.246	5.229	0.16	0.16	1.29	68	2.69	1.00	68	2.2	73	0.092	102	100	15.7	0	431	326	290	323	328	340	808	277	63	46	62	48	60	-0.048	7.56	0.07
34	5.406	5.388	0.16	0.16	1.29	68	2.7	0.99	68	2.2	73	0.096	99	99	15.6	-0.1	437	324	287	322	326	339	836	280	63	47	62	48	60	-0.049	7.42	0.07
35	5.566	5.547	0.16	0.16	1.28	68	2.69	0.99	68	2.2	73	0.099	98	97	15.5	-0.1	440	323	284	320	325	338	849	281	63	47	62	48	60	-0.049	6.88	0.07
36	5.725	5.705	0.16	0.16	1.28	68	2.69	0.99	68	2.3	72	0.099	97	97	15.4	-0.1	443	321	282	319	324	338	854	280	63	47	62	48	60	-0.049	6.24	0.08
37	5.884	5.864	0.16	0.16	1.30	68	2.7	1.00	69	2.3	72	0.100	97	97	15.3	-0.1	444	320	280	318	323	337	854	278	63	47	62	49	60	-0.049	6.09	0.08
38	6.044	6.022	0.16	0.16	1.29	68	2.69	0.99	69	2.2	72	0.102	96	95	15.3	0	444	319	277	317	322	336	852	278	63	47	62	49	60	-0.049	6.32	0.06
39	6.205	6.181	0.16	0.16	1.29	68	2.68	0.99	69	2.3	73	0.101	98	96	15.2	-0.1	444	318	275	315	322	335	851	276	63	47	62	49	60	-0.048	6.1	0.08
40	6.365	6.340	0.16	0.16	1.28	69	2.69	0.99	69	2.2	73	0.099	98	97	15.1	-0.1	443	317	273	314	321	334	849	276	63	48	62	49	60	-0.048	6.68	0.08

Wood Heater Test Data

u

Run: 2

Manufacturer: Kuma Stoves
Model: K-251
Tracking No.: 2464
Project No.: 0123WM014E
Test Date: 13-Apr-23
Beginning Clock Time: 10:52

Total Sampling Time: 377 min
Recording Interval: 1 min
Tunnel Diameter: 6
Background Sample Volume: 69.841 cubic feet

PM Control Modules: 335, 336
Dilution Tunnel MW(dry): 29.00 lb/lb-mole
Dilution Tunnel MW(wet): 28.78 lb/lb-mole
Dilution Tunnel H2O: 2.00 percent
Dilution Tunnel Static: -0.320 "H2O
Tunnel Area: 0.19635 ft2
Pitot Tube Cp: 0.99

Avg. Tunnel Velocity: 18.34 ft/sec.
Initial Tunnel Flow: 214.6 scfm
Average Tunnel Flow: 209.6 scfm
Post-Test Leak Check (1st Hr): 0.000 cfm @ 4 in. Hg
Post-Test Leak Check (1): 0.000 cfm @ 4 in. Hg
Post-Test Leak Check (2): 0.000 cfm @ 4 in. Hg
Average Test Piece Fuel Moisture: 21.88 Dry Basis %

Technician Signature:_____

Export to PDF

Meter Box Y Factor: 1.004 (1) 1.002 (2) 1.012 (Amb)

Barometric Pressure:	Begin	Middle	End	Average
	30.07	30.02	29.96	30.02

Room Air Velocity, fpn
0

OMNI Equipment Numbers: _____

Velocity Traverse Data

	Pt.1	Pt.2	Pt.3	Pt.4	Pt.5	Pt.6	Pt.7	Pt.8	Center	
Initial dP	0.068	0.090	0.090	0.062	0.080	0.088	0.090	0.072	0.099	"H2O
Temp:	76	76	76	76	76	76	76	76	76	°F

V_{strav} 18.80 ft/sec V_{scent} 20.97 ft/sec F_p 0.897

qwq

	Particulate Sampling Data														Fuel Weight (lb)		Temperature Data (°F)													Stack Gas Data		
Elapsed Time (min)	Gas Meter 1 (ft^3)	Gas Meter 2 (ft^3)	Sample Rate 1 (cfm)	Sample Rate 2 (cfm)	Orifice dH 1 ("H_2O)	Meter 1 Temp (°F)	Meter 1 Vacuum ("Hg)	Orifice dH 2 ("H_2O)	Meter 2 Temp (°F)	Meter 2 Vacuum ("Hg)	Dilution Tunnel (°F)	Dilution Tunnel Center dP	Pro. Rate 1	Pro. Rate 2	Scale Reading	Weight Change	Firebox Top	Firebox Bottom	Firebox Back	Firebox Left	Firebox Right	Avg. Stove Surface (Tot = ΔT)	Catalyst Exit	Stack	Filter 1	Dryer Exit 1	Filter 2	Dryer Exit 2	Ambient	Draft ("H_2O)	CO_2 (%)	CO (%)
41	6.524	6.498	0.16	0.16	1.29	69	2.7	1.00	69	2.2	73	0.096	99	98	15.1	0	446	315	271	313	320	333	860	275	63	48	62	49	60	-0.048	6.31	0.08
42	6.684	6.658	0.16	0.16	1.29	69	2.7	0.99	69	2.3	73	0.101	97	97	15.0	-0.1	448	314	268	311	319	332	872	276	63	48	62	49	60	-0.049	6.42	0.09
43	6.845	6.816	0.16	0.16	1.28	69	2.68	0.99	69	2.3	73	0.097	99	98	14.9	-0.1	450	313	267	310	318	332	880	278	63	48	62	49	60	-0.049	6.55	0.09
44	7.005	6.975	0.16	0.16	1.29	69	2.69	1.00	69	2.3	73	0.100	97	97	14.9	0	452	312	265	309	318	331	884	279	63	48	62	49	60	-0.049	6.73	0.09
45	7.164	7.136	0.16	0.16	1.29	69	2.69	1.01	69	2.3	72	0.099	97	98	14.8	-0.1	454	311	263	307	317	330	886	281	63	48	62	50	60	-0.049	6.89	0.08
46	7.324	7.295	0.16	0.16	1.29	69	2.69	1.01	70	2.3	73	0.101	97	96	14.7	-0.1	455	310	261	306	316	330	888	282	63	48	62	50	60	-0.050	7.05	0.08
47	7.484	7.455	0.16	0.16	1.29	69	2.7	1.01	70	2.3	73	0.098	98	98	14.6	-0.1	457	309	260	305	316	329	887	282	63	48	62	50	60	-0.050	7.23	0.08
48	7.646	7.616	0.16	0.16	1.29	69	2.7	1.01	70	2.3	73	0.097	100	99	14.5	-0.1	458	308	258	304	315	329	883	282	63	49	62	50	60	-0.049	7.96	0.08
49	7.806	7.775	0.16	0.16	1.29	70	2.7	1.01	70	2.3	73	0.092	101	101	14.5	0	459	307	256	303	315	328	881	283	63	49	62	50	60	-0.049	8.19	0.08
50	7.965	7.935	0.16	0.16	1.29	70	2.7	1.01	70	2.3	73	0.099	97	98	14.4	-0.1	463	307	255	302	315	328	890	284	63	49	62	50	60	-0.049	7.9	0.09
51	8.125	8.096	0.16	0.16	1.29	70	2.68	1.01	70	2.3	73	0.098	98	99	14.3	-0.1	467	306	254	302	315	329	895	286	63	49	62	50	60	-0.049	8.12	0.08
52	8.286	8.255	0.16	0.16	1.29	70	2.7	1.01	70	2.3	73	0.099	98	97	14.2	-0.1	473	305	253	301	316	330	902	287	63	49	62	51	60	-0.050	8.14	0.08
53	8.447	8.415	0.16	0.16	1.29	70	2.7	1.01	70	2.3	73	0.100	98	97	14.1	-0.1	479	304	252	301	316	330	920	288	63	49	62	51	60	-0.050	7.81	0.08
54	8.607	8.576	0.16	0.16	1.29	70	2.69	1.01	70	2.3	73	0.099	98	98	14.0	-0.1	482	303	251	300	317	331	924	291	63	49	62	51	60	-0.052	8.6	0.1
55	8.767	8.735	0.16	0.16	1.29	70	2.7	1.01	70	2.3	74	0.099	98	97	13.9	-0.1	487	302	251	300	318	332	933	295	63	49	62	51	60	-0.052	9.87	0.62
56	8.927	8.895	0.16	0.16	1.29	70	2.7	1.01	70	2.3	74	0.100	97	97	13.8	-0.1	494	302	250	300	318	333	950	299	63	49	62	51	60	-0.052	9.94	0.56
57	9.087	9.056	0.16	0.16	1.29	70	2.69	1.00	71	2.3	74	0.098	98	99	13.7	-0.1	504	301	250	300	318	335	971	301	63	50	62	51	60	-0.052	9.75	0.16
58	9.248	9.215	0.16	0.16	1.29	70	2.69	1.01	71	2.3	74	0.098	99	97	13.6	-0.1	512	300	249	300	318	336	984	303	63	50	62	51	60	-0.053	9.46	0.08
59	9.409	9.375	0.16	0.16	1.29	70	2.69	1.01	71	2.3	74	0.099	98	98	13.6	0	517	300	249	299	318	337	982	304	63	50	62	51	60	-0.052	9.37	0.06
60	9.569	9.536	0.16	0.16	1.29	70	2.7	1.01	71	2.3	74	0.101	97	97	13.5	-0.1	521	299	248	299	318	337	974	303	63	50	62	51	60	-0.052	9.07	0.05
61	9.728	9.695	0.16	0.16	1.30	70	3.08	1.01	71	2.3	74	0.100	97	97	13.4	-0.1	525	298	248	300	318	338	971	302	60	50	62	51	60	-0.052	8.72	0.06
62	9.889	9.855	0.16	0.16	1.30	70	3.1	1.01	71	2.3	74	0.099	98	98	13.3	-0.1	529	297	248	300	318	338	967	300	60	50	62	51	60	-0.052	8.12	0.06
63	10.051	10.016	0.16	0.16	1.30	71	3.08	1.01	71	2.3	74	0.092	102	102	13.2	-0.1	531	297	248	300	317	339	962	298	61	50	62	52	60	-0.051	7.81	0.07
64	10.211	10.176	0.16	0.16	1.29	71	3.1	1.00	71	2.3	74	0.100	97	97	13.2	0	533	296	247	300	317	339	959	297	61	50	62	52	60	-0.050	7.66	0.08
65	10.372	10.336	0.16	0.16	1.30	71	3.08	1.01	71	2.3	74	0.097	99	99	13.1	-0.1	535	296	247	300	317	339	961	296	61	50	62	52	60	-0.051	7.65	0.08
66	10.532	10.496	0.16	0.16	1.30	71	3.09	1.01	71	2.3	74	0.100	97	97	13.0	-0.1	537	295	247	300	317	339	965	296	61	50	62	52	60	-0.050	7.48	0.1
67	10.693	10.657	0.16	0.16	1.30	71	3.09	1.01	71	2.3	74	0.100	98	98	12.9	-0.1	538	294	246	300	316	339	963	296	61	50	62	52	60	-0.052	8	0.09
68	10.855	10.817	0.16	0.16	1.29	71	3.11	1.00	71	2.3	74	0.097	100	99	12.8	-0.1	540	294	246	300	316	339	967	298	61	51	62	52	60	-0.051	9.09	0.11
69	11.015	10.977	0.16	0.16	1.29	71	3.11	1.01	71	2.3	74	0.100	97	97	12.8	0	544	293	245	299	316	339	975	300	61	51	62	52	60	-0.051	9.4	0.1
70	11.175	11.137	0.16	0.16	1.29	71	3.11	1.00	71	2.3	75	0.100	97	97	12.7	-0.1	548	292	245	299	316	340	984	302	62	51	62	52	60	-0.051	9.21	0.09
71	11.336	11.297	0.16	0.16	1.29	71	3.11	1.01	71	2.3	75	0.091	102	102	12.6	-0.1	552	292	245	299	317	341	988	303	62	51	63	52	60	-0.051	9.38	0.09
72	11.497	11.457	0.16	0.16	1.29	71	3.11	1.01	71	2.3	75	0.092	102	101	12.5	-0.1	555	291	245	300	318	342	992	305	62	51	63	52	60	-0.052	9.53	0.1
73	11.658	11.618	0.16	0.16	1.30	71	3.11	1.01	71	2.3	75	0.098	99	99	12.4	-0.1	559	291	245	300	319	343	1002	307	62	51	63	52	60	-0.054	9.7	0.1
74	11.819	11.778	0.16	0.16	1.29	71	3.1	1.01	71	2.3	75	0.099	98	98	12.3	-0.1	562	290	245	300	320	343	1006	309	62	51	63	52	60	-0.052	9.37	0.09
75	11.980	11.938	0.16	0.16	1.29	71	3.11	1.01	72	2.3	76	0.101	97	97	12.2	-0.1	564	289	246	301	321	344	1007	309	62	51	63	53	60	-0.054	9.22	0.1
76	12.140	12.099	0.16	0.16	1.29	71	3.11	1.01	72	2.3	75	0.101	97	97	12.2	0	567	289	247	301	322	345	1013	310	62	51	63	53	60	-0.051	9.19	0.11
77	12.300	12.259	0.16	0.16	1.30	71	3.11	1.01	72	2.3	75	0.099	98	98	12.1	-0.1	570	288	247	302	324	346	1021	311	62	51	63	53	60	-0.053	9.16	0.12
78	12.461	12.419	0.16	0.16	1.29	71	3.1	1.01	72	2.3	76	0.087	105	104	12.0	-0.1	572	288	248	302	325	347	1025	313	62	51	63	53	60	-0.053	9.18	0.12
79	12.623	12.581	0.16	0.16	1.30	71	3.11	1.01	72	2.3	76	0.099	99	99	11.9	-0.1	574	287	249	303	326	348	1026	314	62	51	63	53	60	-0.051	9.29	0.12
80	12.784	12.740	0.16	0.16	1.29	71	3.11	1.01	72	2.3	76	0.100	98	97	11.8	-0.1	576	287	249	303	328	349	1029	315	62	51	63	53	60	-0.053	9.25	0.12
81	12.944	12.900	0.16	0.16	1.29	71	3.11	1.01	72	2.3	76	0.101	97	97	11.7	-0.1	578	286	250	304	329	349	1033	315	62	51	63	53	60	-0.055	9.18	0.12
82	13.104	13.061	0.16	0.16	1.30	71	3.1	1.01	72	2.3	76	0.096	99	100	11.6	-0.1	579	285	250	304	330	350	1034	316	62	51	63	53	60	-0.051	9.29	0.12
83	13.265	13.221	0.16	0.16	1.30	71	3.11	1.01	72	2.3	76	0.095	100	100	11.6	0	581	285	251	305	331	351	1035	317	62	51	63	53	60	-0.052	9.32	0.12
84	13.427	13.381	0.16	0.16	1.30	71	3.11	1.01	72	2.3	76	0.092	103	101	11.5	-0.1	581	284	251	305	333	351	1032	316	62	52	63	53	60	-0.053	9.47	0.12

Wood Heater Test Data

u

Run: 2

Manufacturer: Kuma Stoves
Model: K-251
Tracking No.: 2464
Project No.: 0123WM014E
Test Date: 13-Apr-23
Beginning Clock Time: 10:52

Total Sampling Time: 377 min
Recording Interval: 1 min
Tunnel Diameter: 6
Background Sample Volume: 69.841 cubic feet

PM Control Modules: 335, 336
Dilution Tunnel MW(dry): 29.00 lb/lb-mole
Dilution Tunnel MW(wet): 28.78 lb/lb-mole
Dilution Tunnel H2O: 2.00 percent
Dilution Tunnel Static: -0.320 "H2O
Tunnel Area: 0.19635 ft2
Pitot Tube Cp: 0.99

Avg. Tunnel Velocity: 18.34 ft/sec.
Initial Tunnel Flow: 214.6 scfm
Average Tunnel Flow: 209.6 scfm
Post-Test Leak Check (1st Hr): 0.000 cfm @ 4 in. Hg
Post-Test Leak Check (1): 0.000 cfm @ 4 in. Hg
Post-Test Leak Check (2): 0.000 cfm @ 4 in. Hg
Average Test Piece Fuel Moisture: 21.88 Dry Basis %

Technician Signature:_____

Meter Box Y Factor: 1.004 (1) 1.002 (2) 1.012 (Amb)

Export to PDF

Barometric Pressure:	Begin	Middle	End	Average
	30.07	30.02	29.96	30.02

Room Air Velocity, fpn
0

OMNI Equipment Numbers: _____

Velocity Traverse Data

	Pt.1	Pt.2	Pt.3	Pt.4	Pt.5	Pt.6	Pt.7	Pt.8	Center	
Initial dP	0.068	0.090	0.090	0.062	0.080	0.088	0.090	0.072	0.099	"H2O
Temp:	76	76	76	76	76	76	76	76	76	°F

V_{strav} 18.80 ft/sec V_{scent} 20.97 ft/sec F_p 0.897

qwq

	Particulate Sampling Data														Fuel Weight (lb)		Temperature Data (°F)													Stack Gas Data		
Elapsed Time (min)	Gas Meter 1 (ft^3)	Gas Meter 2 (ft^3)	Sample Rate 1 (cfm)	Sample Rate 2 (cfm)	Orifice dH 1 ("H_2O)	Meter 1 Temp (°F)	Meter 1 Vacuum ("Hg)	Orifice dH 2 ("H_2O)	Meter 2 Temp (°F)	Meter 2 Vacuum ("Hg)	Dilution Tunnel (°F)	Dilution Tunnel Center dP	Pro. Rate 1	Pro. Rate 2	Scale Reading	Weight Change	Firebox Top	Firebox Bottom	Firebox Back	Firebox Left	Firebox Right	Avg. Stove Surface (Tot = ΔT)	Catalyst Exit	Stack	Filter 1	Dryer Exit 1	Filter 2	Dryer Exit 2	Ambient	Draft ("H_2O)	CO_2 (%)	CO (%)
85	13.587	13.542	0.16	0.16	1.29	71	3.11	1.01	72	2.3	76	0.089	103	104	11.4	-0.1	581	284	252	306	334	351	1026	316	63	52	63	53	61	-0.052	9.54	0.11
86	13.748	13.702	0.16	0.16	1.28	72	3.11	1.01	72	2.3	76	0.098	99	98	11.3	-0.1	583	284	253	306	336	352	1033	319	63	52	63	53	60	-0.053	9.7	0.12
87	13.908	13.862	0.16	0.16	1.29	72	3.1	1.01	72	2.3	76	0.096	99	99	11.2	-0.1	586	283	254	307	337	353	1041	320	63	52	63	53	60	-0.051	9.86	0.13
88	14.069	14.022	0.16	0.16	1.30	72	3.12	1.01	72	2.3	77	0.096	100	99	11.1	-0.1	588	283	255	308	339	355	1042	322	63	52	63	53	61	-0.056	9.99	0.12
89	14.230	14.183	0.16	0.16	1.30	72	3.1	1.00	72	2.3	77	0.092	102	102	11.0	-0.1	588	282	256	308	340	355	1039	322	63	52	63	53	60	-0.054	10.18	0.12
90	14.391	14.343	0.16	0.16	1.29	72	3.12	1.01	72	2.3	77	0.096	100	99	10.9	-0.1	589	282	257	309	342	356	1037	323	63	52	63	54	60	-0.054	10.42	0.13
91	14.552	14.503	0.16	0.16	1.29	72	3.12	1.01	72	2.3	77	0.088	104	104	10.8	-0.1	590	282	259	310	344	357	1036	323	63	52	63	54	60	-0.056	10.61	0.13
92	14.712	14.664	0.16	0.16	1.29	72	3.12	1.01	72	2.3	77	0.084	106	107	10.7	-0.1	591	281	260	311	346	358	1035	324	63	52	63	54	61	-0.056	10.79	0.13
93	14.872	14.824	0.16	0.16	1.29	72	3.11	1.01	72	2.3	77	0.093	101	101	10.6	-0.1	593	281	262	312	347	359	1036	328	63	52	63	54	60	-0.059	10.77	0.11
94	15.033	14.984	0.16	0.16	1.29	72	3.11	1.01	72	2.3	77	0.097	99	99	10.5	-0.1	597	281	264	314	349	361	1044	329	63	52	63	54	60	-0.052	10.92	0.11
95	15.195	15.146	0.16	0.16	1.29	72	3.12	1.01	72	2.3	77	0.099	99	99	10.4	-0.1	602	280	266	316	350	363	1052	329	63	52	63	54	60	-0.054	11.28	0.13
96	15.355	15.305	0.16	0.16	1.29	72	3.12	1.01	72	2.3	78	0.085	105	105	10.3	-0.1	619	280	268	318	351	367	1105	329	63	52	63	54	60	-0.055	11.33	0.27
97	15.516	15.465	0.16	0.16	1.29	72	3.1	1.01	72	2.3	78	0.088	104	104	10.2	-0.1	639	280	269	319	352	372	1153	332	63	52	63	54	61	-0.055	11.35	0.3
98	15.676	15.626	0.16	0.16	1.29	72	3.12	1.01	72	2.3	78	0.099	98	98	10.1	-0.1	657	279	270	321	352	376	1187	335	63	52	63	54	61	-0.055	11.39	0.31
99	15.837	15.786	0.16	0.16	1.29	72	3.12	1.01	72	2.3	78	0.098	99	98	10.0	-0.1	673	279	271	321	352	379	1209	338	63	52	63	54	61	-0.056	11.47	0.31
100	15.998	15.946	0.16	0.16	1.28	72	3.11	1.01	72	2.3	78	0.092	102	101	9.9	-0.1	688	279	272	322	352	383	1226	341	63	52	63	54	61	-0.056	11.49	0.32
101	16.159	16.107	0.16	0.16	1.29	72	3.11	1.01	72	2.3	78	0.089	104	104	9.8	-0.1	700	279	273	323	352	385	1234	345	63	52	63	54	60	-0.056	11.75	0.44
102	16.320	16.267	0.16	0.16	1.29	72	3.12	1.00	72	2.3	78	0.096	100	99	9.7	-0.1	709	279	273	323	352	387	1240	345	64	52	63	54	60	-0.056	11.44	0.33
103	16.480	16.427	0.16	0.16	1.29	72	3.12	1.01	72	2.3	79	0.098	98	98	9.6	-0.1	719	279	274	324	351	389	1250	345	64	52	63	54	60	-0.057	11.57	0.38
104	16.640	16.588	0.16	0.16	1.29	72	3.12	1.01	72	2.3	78	0.087	104	105	9.5	-0.1	728	279	275	325	351	392	1259	346	64	53	64	54	61	-0.056	11.7	0.42
105	16.801	16.748	0.16	0.16	1.29	72	3.12	1.01	72	2.3	78	0.093	101	101	9.5	0	737	279	275	326	351	394	1269	348	64	53	64	54	61	-0.056	11.82	0.41
106	16.962	16.908	0.16	0.16	1.29	72	3.11	1.01	72	2.3	78	0.098	99	98	9.3	-0.2	746	279	276	327	351	396	1279	350	64	53	64	54	60	-0.056	12.07	0.43
107	17.123	17.069	0.16	0.16	1.29	72	3.11	1.01	73	2.3	79	0.087	105	105	9.2	-0.1	754	279	277	328	351	398	1286	351	64	53	64	54	61	-0.056	12.04	0.46
108	17.283	17.229	0.16	0.16	1.29	72	3.13	1.00	73	2.3	79	0.096	99	99	9.1	-0.1	761	279	278	329	351	400	1292	352	64	53	64	54	61	-0.057	12.07	0.48
109	17.444	17.389	0.16	0.16	1.29	72	3.11	1.01	73	2.3	79	0.095	100	100	9.1	0	767	279	279	330	351	401	1295	354	64	53	64	54	61	-0.057	11.99	0.48
110	17.604	17.549	0.16	0.16	1.29	72	3.13	1.01	73	2.3	79	0.090	103	102	8.9	-0.2	772	279	280	331	351	403	1296	355	64	53	64	55	61	-0.057	11.9	0.47
111	17.766	17.710	0.16	0.16	1.30	72	3.12	1.01	73	2.3	79	0.095	101	100	8.9	0	776	279	281	332	351	404	1295	355	64	53	64	55	61	-0.056	11.88	0.46
112	17.926	17.870	0.16	0.16	1.29	72	3.13	1.01	73	2.3	79	0.094	100	100	8.8	-0.1	773	275	282	334	351	403	1274	361	64	53	64	55	61	-0.056	11.64	0.28
113	18.087	18.030	0.16	0.16	1.29	72	3.13	1.01	73	2.3	79	0.089	104	103	8.7	-0.1	761	275	284	335	351	401	1229	360	64	53	64	55	62	-0.069	11.43	0.35
114	18.247	18.191	0.16	0.16	1.29	72	3.12	1.00	73	2.3	80	0.097	99	99	8.5	-0.2	750	274	286	337	352	400	1201	363	64	53	64	55	62	-0.059	11.75	0.23
115	18.408	18.351	0.16	0.16	1.29	72	3.12	1.00	73	2.3	79	0.094	101	100	8.5	0	745	275	288	340	353	400	1198	355	64	53	64	55	61	-0.057	11.87	0.31
116	18.569	18.511	0.16	0.16	1.29	72	3.13	1.00	73	2.3	79	0.099	98	98	8.4	-0.1	751	275	290	342	354	402	1234	353	64	53	64	55	61	-0.058	11.93	0.37
117	18.730	18.672	0.16	0.16	1.30	72	3.12	1.01	73	2.3	79	0.086	106	105	8.3	-0.1	757	275	292	344	355	405	1255	354	64	53	64	55	61	-0.056	12.01	0.4
118	18.891	18.832	0.16	0.16	1.28	72	3.12	1.00	73	2.3	80	0.089	104	103	8.2	-0.1	764	276	294	345	355	407	1268	355	64	53	64	55	61	-0.057	12.05	0.43
119	19.051	18.992	0.16	0.16	1.30	72	3.12	1.01	73	2.3	79	0.089	103	103	8.1	-0.1	770	276	295	347	355	409	1279	356	64	53	64	55	62	-0.057	12.12	0.44
120	19.212	19.153	0.16	0.16	1.29	72	3.13	1.01	73	2.3	79	0.086	106	105	8.0	-0.1	776	276	296	348	355	410	1289	356	64	53	64	55	61	-0.058	12.17	0.47
121	19.372	19.314	0.16	0.16	1.30	72	3.12	1.01	73	2.3	79	0.091	102	103	7.9	-0.1	782	277	298	349	356	412	1298	357	64	53	64	55	61	-0.058	12.25	0.49
122	19.534	19.474	0.16	0.16	1.29	73	3.12	1.01	73	2.3	79	0.095	101	100	7.8	-0.1	787	277	299	350	356	414	1307	359	64	53	64	55	61	-0.058	12.39	0.54
123	19.695	19.634	0.16	0.16	1.29	73	3.13	1.01	73	2.3	78	0.101	97	97	7.7	-0.1	792	277	300	351	356	415	1315	360	64	53	64	55	61	-0.058	12.45	0.66
124	19.855	19.795	0.16	0.16	1.29	73	3.11	1.01	73	2.3	79	0.095	100	100	7.6	-0.1	797	277	302	352	356	417	1324	361	64	53	64	55	61	-0.058	12.48	0.91
125	20.016	19.955	0.16	0.16	1.29	73	3.13	1.01	73	2.3	79	0.100	98	97	7.5	-0.1	802	278	303	353	357	419	1332	362	64	53	64	55	61	-0.058	12.5	1.14
126	20.177	20.115	0.16	0.16	1.29	73	3.12	1.01	73	2.3	79	0.100	98	97	7.3	-0.2	800	278	304	355	357	419	1318	366	64	53	64	55	61	-0.062	12.6	0.45
127	20.338	20.276	0.16	0.16	1.29	73	3.13	1.01	73	2.3	79	0.100	98	98	7.2	-0.1	784	279	306	356	358	417	1258	364	64	53	64	55	61	-0.060	12.07	0.31
128	20.499	20.436	0.16	0.16	1.29	73	3.11	1.00	73	2.3	79	0.100	98	97	7.1	-0.1	768	279	308	359	359	415	1218	361	64	53	64	55	61	-0.060	11.99	0.27

Wood Heater Test Data

u

Run: 2

Manufacturer: Kuma Stoves
Model: K-251
Tracking No.: 2464
Project No.: 0123WM014E
Test Date: 13-Apr-23
Beginning Clock Time: 10:52

Total Sampling Time: 377 min
Recording Interval: 1 min
Tunnel Diameter: 6
Background Sample Volume: 69.841 cubic feet

PM Control Modules: 335, 336
Dilution Tunnel MW(dry): 29.00 lb/lb-mole
Dilution Tunnel MW(wet): 28.78 lb/lb-mole
Dilution Tunnel H2O: 2.00 percent
Dilution Tunnel Static: -0.320 "H2O
Tunnel Area: 0.19635 ft2
Pitot Tube Cp: 0.99

Avg. Tunnel Velocity: 18.34 ft/sec.
Initial Tunnel Flow: 214.6 scfm
Average Tunnel Flow: 209.6 scfm
Post-Test Leak Check (1st Hr): 0.000 cfm @ 4 in. Hg
Post-Test Leak Check (1): 0.000 cfm @ 4 in. Hg
Post-Test Leak Check (2): 0.000 cfm @ 4 in. Hg
Average Test Piece Fuel Moisture: 21.88 Dry Basis %

Technician Signature:_____

Meter Box Y Factor: 1.004 (1) 1.002 (2) 1.012 (Amb)

Barometric Pressure:

Begin	Middle	End	Average
30.07	30.02	29.96	30.02

Room Air Velocity, fpn
0

OMNI Equipment Numbers: _____

Velocity Traverse Data

	Pt.1	Pt.2	Pt.3	Pt.4	Pt.5	Pt.6	Pt.7	Pt.8	Center	
Initial dP	0.068	0.090	0.090	0.062	0.080	0.088	0.090	0.072	0.099	"H2O
Temp:	76	76	76	76	76	76	76	76	76	°F

V_{strav} 18.80 ft/sec V_{scent} 20.97 ft/sec F_p 0.897

qwq

	Particulate Sampling Data														Fuel Weight (lb)		Temperature Data (°F)													Stack Gas Data		
Elapsed Time (min)	Gas Meter 1 (ft^3)	Gas Meter 2 (ft^3)	Sample Rate 1 (cfm)	Sample Rate 2 (cfm)	Orifice dH 1 ("H_2O)	Meter 1 Temp (°F)	Meter 1 Vacuum ("Hg)	Orifice dH 2 ("H_2O)	Meter 2 Temp (°F)	Meter 2 Vacuum ("Hg)	Dilution Tunnel (°F)	Dilution Tunnel Center dP	Pro. Rate 1	Pro. Rate 2	Scale Reading	Weight Change	Firebox Top	Firebox Bottom	Firebox Back	Firebox Left	Firebox Right	Avg. Stove Surface (Tot = ΔT)	Catalyst Exit	Stack	Filter 1	Dryer Exit 1	Filter 2	Dryer Exit 2	Ambient	Draft ("H_2O)	CO_2 (%)	CO (%)
129	20.660	20.596	0.16	0.16	1.29	73	3.12	1.01	73	2.3	79	0.097	99	99	7.0	-0.1	754	280	311	362	360	413	1187	356	64	53	64	55	60	-0.057	11.8	0.17
130	20.820	20.758	0.16	0.16	1.29	73	3.12	1.00	73	2.3	79	0.097	99	100	6.9	-0.1	741	280	314	365	362	412	1160	353	64	53	64	55	61	-0.056	11.5	0.11
131	20.981	20.917	0.16	0.16	1.29	73	3.13	1.01	73	2.3	79	0.097	99	98	6.9	0	728	280	317	368	363	411	1135	348	64	53	64	55	61	-0.057	11.2	0.1
132	21.142	21.078	0.16	0.16	1.29	73	3.12	1.01	73	2.3	79	0.098	99	99	6.8	-0.1	716	280	320	371	365	410	1115	345	64	53	64	55	62	-0.055	10.97	0.1
133	21.304	21.239	0.16	0.16	1.29	73	3.12	1.01	73	2.3	79	0.098	99	99	6.7	-0.1	706	281	324	375	367	411	1098	341	64	53	64	55	61	-0.055	10.87	0.1
134	21.464	21.399	0.16	0.16	1.28	73	3.12	1.00	73	2.3	79	0.092	101	101	6.6	-0.1	696	281	327	378	368	410	1081	337	64	54	64	55	61	-0.055	10.86	0.1
135	21.625	21.559	0.16	0.16	1.29	73	3.12	1.01	73	2.3	79	0.087	105	104	6.5	-0.1	687	281	330	381	370	410	1068	334	64	54	64	55	61	-0.054	10.62	0.08
136	21.785	21.720	0.16	0.16	1.30	73	3.12	1.01	73	2.3	79	0.092	101	102	6.4	-0.1	678	281	333	383	371	409	1053	331	64	54	64	55	62	-0.054	10.49	0.09
137	21.946	21.880	0.16	0.16	1.29	73	3.12	1.01	73	2.3	79	0.092	102	101	6.4	0	670	281	336	386	373	409	1041	328	64	54	64	55	61	-0.054	10.29	0.08
138	22.107	22.040	0.16	0.16	1.29	73	3.12	1.00	73	2.3	79	0.097	99	99	6.3	-0.1	662	282	340	388	374	409	1030	325	64	54	64	55	61	-0.052	9.97	0.07
139	22.268	22.200	0.16	0.16	1.29	73	3.13	1.01	73	2.3	78	0.091	102	102	6.2	-0.1	655	282	343	391	376	409	1019	322	64	54	64	55	61	-0.053	9.77	0.08
140	22.429	22.362	0.16	0.16	1.29	73	3.13	1.00	73	2.3	78	0.092	102	103	6.2	0	647	282	346	393	377	409	1008	319	64	54	64	55	61	-0.052	9.55	0.07
141	22.589	22.522	0.16	0.16	1.29	73	3.13	1.01	73	2.3	78	0.098	98	98	6.1	-0.1	639	282	348	395	378	408	999	316	64	54	64	55	61	-0.053	9.34	0.07
142	22.750	22.682	0.16	0.16	1.30	73	3.12	1.00	73	2.3	77	0.098	98	98	6.0	-0.1	632	283	351	397	379	408	990	314	64	54	64	55	61	-0.052	9.2	0.07
143	22.911	22.843	0.16	0.16	1.29	73	3.12	1.01	73	2.3	77	0.099	98	98	6.0	0	625	283	354	399	380	408	980	312	64	54	64	55	61	-0.052	9.03	0.06
144	23.073	23.003	0.16	0.16	1.28	73	3.13	1.01	73	2.3	76	0.091	103	102	5.9	-0.1	618	283	356	400	380	407	971	308	64	54	64	55	61	-0.051	8.81	0.06
145	23.233	23.163	0.16	0.16	1.28	73	3.13	1.00	73	2.3	76	0.101	96	96	5.8	-0.1	618	283	358	402	381	408	996	307	64	54	64	55	61	-0.052	9.33	0.21
146	23.394	23.324	0.16	0.16	1.29	73	3.11	1.00	73	2.3	76	0.098	98	99	5.8	0	628	284	360	402	381	411	1052	309	64	54	64	55	61	-0.052	9.6	0.26
147	23.554	23.485	0.16	0.16	1.29	73	3.13	1.00	73	2.3	76	0.095	99	100	5.7	-0.1	636	284	360	402	381	413	1084	311	64	54	64	55	61	-0.051	9.48	0.26
148	23.715	23.645	0.16	0.16	1.29	73	3.11	1.01	73	2.3	76	0.100	97	97	5.6	-0.1	643	284	361	402	381	414	1100	314	64	54	64	55	61	-0.052	9.48	0.27
149	23.877	23.806	0.16	0.16	1.30	73	3.13	1.01	73	2.3	77	0.087	105	105	5.6	0	649	284	361	402	380	415	1110	315	64	54	64	55	60	-0.052	9.54	0.28
150	24.038	23.966	0.16	0.16	1.30	73	3.11	1.01	73	2.3	77	0.093	101	101	5.5	-0.1	654	284	361	401	379	416	1117	316	64	54	64	55	61	-0.052	9.48	0.28
151	24.199	24.126	0.16	0.16	1.29	73	3.13	1.01	73	2.3	76	0.098	98	98	5.5	0	657	284	361	400	378	416	1119	315	64	54	64	55	60	-0.052	9.29	0.28
152	24.359	24.287	0.16	0.16	1.29	73	3.13	1.01	73	2.3	77	0.091	102	102	5.4	-0.1	658	284	361	400	377	416	1118	315	64	54	64	55	61	-0.052	9.2	0.28
153	24.520	24.448	0.16	0.16	1.29	73	3.11	1.01	73	2.3	76	0.093	101	101	5.4	0	659	285	361	399	376	416	1115	315	64	54	64	55	61	-0.051	9.04	0.28
154	24.681	24.608	0.16	0.16	1.29	73	3.11	1.00	73	2.3	77	0.099	98	98	5.3	-0.1	658	285	360	399	375	415	1111	313	64	54	64	55	61	-0.051	9.09	0.28
155	24.843	24.769	0.16	0.16	1.28	73	3.12	1.01	73	2.3	77	0.095	101	100	5.2	-0.1	657	285	361	398	374	415	1106	313	64	54	64	55	61	-0.051	9.11	0.28
156	25.003	24.930	0.16	0.16	1.29	73	3.13	1.01	73	2.3	77	0.099	97	98	5.2	0	655	285	361	398	374	415	1102	312	64	54	64	55	61	-0.051	9.09	0.28
157	25.164	25.090	0.16	0.16	1.29	73	3.11	1.00	73	2.3	77	0.099	98	98	5.1	-0.1	653	285	361	398	373	414	1098	311	64	54	64	55	61	-0.051	9.05	0.28
158	25.325	25.250	0.16	0.16	1.29	73	3.13	1.01	73	2.3	77	0.096	100	99	5.1	0	651	285	360	397	373	413	1094	310	64	54	64	55	61	-0.051	9.07	0.28
159	25.486	25.412	0.16	0.16	1.29	73	3.13	1.01	73	2.3	77	0.099	98	99	5.0	-0.1	649	286	361	397	372	413	1091	310	64	54	64	55	62	-0.051	9.12	0.28
160	25.647	25.572	0.16	0.16	1.29	73	3.13	1.01	73	2.3	77	0.092	102	101	5.0	0	647	286	360	397	372	412	1089	309	64	54	64	55	62	-0.051	9.17	0.29
161	25.808	25.732	0.16	0.16	1.29	73	3.12	1.01	73	2.3	76	0.094	100	100	4.9	-0.1	646	286	361	397	372	412	1087	309	64	54	64	55	62	-0.051	9.21	0.29
162	25.969	25.893	0.16	0.16	1.29	73	3.13	1.01	73	2.3	76	0.101	97	97	4.9	0	644	287	361	397	372	412	1087	309	64	54	64	55	62	-0.051	9.37	0.29
163	26.129	26.054	0.16	0.16	1.29	73	3.12	1.00	73	2.3	76	0.095	99	100	4.8	-0.1	644	287	361	398	372	412	1089	309	64	54	64	55	62	-0.050	9.34	0.29
164	26.290	26.214	0.16	0.16	1.29	73	3.12	1.00	73	2.3	77	0.089	103	103	4.8	0	644	287	362	398	372	413	1091	308	64	54	64	55	61	-0.050	9.51	0.3
165	26.451	26.374	0.16	0.16	1.29	73	3.13	1.00	73	2.3	77	0.099	98	98	4.7	-0.1	645	288	362	398	372	413	1095	308	64	54	64	55	61	-0.051	9.61	0.3
166	26.613	26.535	0.16	0.16	1.28	73	3.13	1.00	73	2.3	77	0.100	98	98	4.7	0	646	288	363	398	372	413	1098	309	64	54	64	55	61	-0.050	9.65	0.3
167	26.774	26.695	0.16	0.16	1.29	73	3.11	1.00	73	2.3	77	0.095	100	100	4.6	-0.1	647	288	363	398	372	414	1102	308	64	54	64	55	61	-0.050	9.64	0.3
168	26.934	26.856	0.16	0.16	1.29	73	3.13	1.01	73	2.3	77	0.098	98	99	4.6	0	647	288	364	399	372	414	1102	308	64	54	64	55	62	-0.050	9.49	0.3
169	27.095	27.017	0.16	0.16	1.29	73	3.13	1.01	73	2.3	77	0.093	101	101	4.5	-0.1	647	289	364	399	372	414	1101	308	64	54	64	55	62	-0.050	9.47	0.3
170	27.256	27.177	0.16	0.16	1.29	73	3.12	1.01	74	2.3	77	0.095	100	99	4.4	-0.1	646	289	364	399	372	414	1097	308	64	54	64	55	62	-0.050	9.44	0.3
171	27.417	27.337	0.16	0.16	1.29	73	3.13	1.01	74	2.3	77	0.097	99	98	4.4	0	645	289	365	400	373	414	1092	307	64	54	64	55	62	-0.049	9.36	0.29
172	27.579	27.498	0.16	0.16	1.29	73	3.13	1.01	74	2.3	77	0.088	105	104	4.3	-0.1	643	290	365	400	373	414	1088	307	64	54	64	55	62	-0.049	9.29	0.29

Wood Heater Test Data

u

Run: 2

Manufacturer: Kuma Stoves
Model: K-251
Tracking No.: 2464
Project No.: 0123WM014E
Test Date: 13-Apr-23
Beginning Clock Time: 10:52

Total Sampling Time: 377 min
Recording Interval: 1 min
Tunnel Diameter: 6
Background Sample Volume: 69.841 cubic feet

PM Control Modules: 335, 336
Dilution Tunnel MW(dry): 29.00 lb/lb-mole
Dilution Tunnel MW(wet): 28.78 lb/lb-mole
Dilution Tunnel H2O: 2.00 percent
Dilution Tunnel Static: -0.320 "H2O
Tunnel Area: 0.19635 ft2
Pitot Tube Cp: 0.99

Avg. Tunnel Velocity: 18.34 ft/sec.
Initial Tunnel Flow: 214.6 scfm
Average Tunnel Flow: 209.6 scfm
Post-Test Leak Check (1st Hr): 0.000 cfm @ 4 in. Hg
Post-Test Leak Check (1): 0.000 cfm @ 4 in. Hg
Post-Test Leak Check (2): 0.000 cfm @ 4 in. Hg
Average Test Piece Fuel Moisture: 21.88 Dry Basis %

Technician Signature:_____

Meter Box Y Factor: 1.004 (1) 1.002 (2) 1.012 (Amb)

Export to PDF

Barometric Pressure:	Begin	Middle	End	Average
	30.07	30.02	29.96	30.02

Room Air Velocity, fpn
0

OMNI Equipment Numbers: _____

Velocity Traverse Data

	Pt.1	Pt.2	Pt.3	Pt.4	Pt.5	Pt.6	Pt.7	Pt.8	Center	
Initial dP	0.068	0.090	0.090	0.062	0.080	0.088	0.090	0.072	0.099	"H2O
Temp:	76	76	76	76	76	76	76	76	76	°F

V_{strav} 18.80 ft/sec V_{scent} 20.97 ft/sec F_p 0.897

qwq

	Particulate Sampling Data														Fuel Weight (lb)		Temperature Data (°F)													Stack Gas Data		
Elapsed Time (min)	Gas Meter 1 (ft^3)	Gas Meter 2 (ft^3)	Sample Rate 1 (cfm)	Sample Rate 2 (cfm)	Orifice dH 1 ("H_2O)	Meter 1 Temp (°F)	Meter 1 Vacuum ("Hg)	Orifice dH 2 ("H_2O)	Meter 2 Temp (°F)	Meter 2 Vacuum ("Hg)	Dilution Tunnel (°F)	Dilution Tunnel Center dP	Pro. Rate 1	Pro. Rate 2	Scale Reading	Weight Change	Firebox Top	Firebox Bottom	Firebox Back	Firebox Left	Firebox Right	Avg. Stove Surface (Tot = ΔT)	Catalyst Exit	Stack	Filter 1	Dryer Exit 1	Filter 2	Dryer Exit 2	Ambient	Draft ("H_2O)	CO_2 (%)	CO (%)
173	27.739	27.659	0.16	0.16	1.28	73	3.12	1.00	74	2.3	77	0.089	103	103	4.3	0	642	290	366	401	373	414	1087	306	64	54	64	55	62	-0.049	9.37	0.3
174	27.900	27.819	0.16	0.16	1.29	73	3.14	1.00	74	2.3	77	0.097	99	98	4.2	-0.1	641	290	367	401	374	415	1087	305	64	54	64	55	62	-0.050	9.32	0.3
175	28.061	27.980	0.16	0.16	1.29	73	3.12	1.00	74	2.3	77	0.088	104	104	4.2	0	640	289	367	402	374	414	1085	304	64	54	64	55	62	-0.049	9.25	0.3
176	28.222	28.141	0.16	0.16	1.29	73	3.12	1.01	74	2.3	77	0.090	103	103	4.2	0	638	289	368	402	374	414	1083	303	64	54	64	55	61	-0.050	9.27	0.3
177	28.383	28.301	0.16	0.16	1.28	73	3.13	1.01	74	2.3	77	0.097	99	98	4.1	-0.1	637	289	368	402	375	414	1081	303	64	54	64	55	62	-0.049	9.2	0.3
178	28.544	28.461	0.16	0.16	1.29	73	3.13	1.01	74	2.3	76	0.090	103	102	4.1	0	635	290	369	403	375	414	1079	302	64	54	64	55	62	-0.050	9.09	0.29
179	28.705	28.623	0.16	0.16	1.28	74	3.13	1.01	74	2.3	77	0.091	102	103	4.0	-0.1	633	290	369	403	376	414	1076	302	64	54	64	55	62	-0.048	9.16	0.29
180	28.866	28.783	0.16	0.16	1.29	74	3.12	1.01	74	2.3	77	0.095	100	99	4.0	0	631	291	370	404	376	414	1072	301	64	54	64	55	62	-0.049	9.13	0.3
181	29.026	28.943	0.16	0.16	1.29	73	3.13	1.01	74	2.3	77	0.100	97	97	3.9	-0.1	629	291	371	404	377	414	1069	299	64	54	64	55	62	-0.048	9.01	0.29
182	29.188	29.104	0.16	0.16	1.29	73	3.13	1.00	74	2.3	77	0.099	99	98	3.9	0	627	291	371	405	377	414	1066	299	64	54	64	55	62	-0.048	9.08	0.29
183	29.349	29.265	0.16	0.16	1.29	74	3.13	1.00	74	2.3	76	0.097	99	99	3.8	-0.1	624	291	372	405	378	414	1063	297	65	54	64	55	62	-0.049	8.96	0.29
184	29.510	29.425	0.16	0.16	1.29	74	3.13	1.01	74	2.3	76	0.091	102	101	3.8	0	622	292	373	405	378	414	1059	297	65	54	64	55	62	-0.048	8.88	0.28
185	29.671	29.586	0.16	0.16	1.28	74	3.13	1.01	74	2.3	76	0.093	101	101	3.7	-0.1	619	292	373	406	379	414	1056	295	65	54	64	55	62	-0.049	8.77	0.28
186	29.832	29.747	0.16	0.16	1.29	74	3.13	1.00	74	2.3	76	0.097	99	99	3.7	0	617	293	373	406	379	414	1052	295	65	54	64	55	62	-0.048	8.81	0.28
187	29.993	29.907	0.16	0.16	1.29	74	3.12	1.01	74	2.3	76	0.091	102	101	3.7	0	615	293	374	407	380	414	1048	295	64	54	64	55	62	-0.048	8.8	0.28
188	30.154	30.067	0.16	0.16	1.29	74	3.12	1.00	74	2.3	76	0.087	104	104	3.6	-0.1	612	293	375	407	381	414	1045	294	64	54	64	55	62	-0.048	8.86	0.28
189	30.316	30.229	0.16	0.16	1.29	74	3.12	1.01	74	2.3	76	0.089	104	104	3.6	0	610	290	375	407	381	413	1043	293	64	54	64	55	62	-0.048	8.8	0.28
190	30.476	30.389	0.16	0.16	1.28	74	3.12	1.00	74	2.3	76	0.100	97	97	3.5	-0.1	607	291	376	408	382	413	1039	293	65	54	64	55	62	-0.047	8.38	0.26
191	30.637	30.549	0.16	0.16	1.29	74	3.13	1.00	74	2.3	76	0.090	102	102	3.5	0	604	291	376	408	383	412	1034	291	65	54	64	55	62	-0.047	8.3	0.26
192	30.798	30.711	0.16	0.16	1.29	74	3.12	1.00	74	2.3	76	0.090	102	103	3.5	0	601	291	376	408	384	412	1029	290	65	54	64	55	62	-0.047	8.17	0.25
193	30.959	30.871	0.16	0.16	1.29	74	3.12	1.00	74	2.3	76	0.089	103	103	3.4	-0.1	597	292	376	409	384	412	1021	288	65	54	64	55	62	-0.047	8.03	0.24
194	31.120	31.031	0.16	0.16	1.29	74	3.12	1.01	74	2.3	76	0.097	99	98	3.4	0	592	292	376	409	385	411	1012	287	65	54	64	55	62	-0.046	7.86	0.24
195	31.282	31.192	0.16	0.16	1.29	74	3.13	1.01	74	2.3	76	0.086	106	105	3.4	0	586	293	376	409	385	410	1001	285	65	53	64	55	62	-0.047	7.72	0.23
196	31.443	31.353	0.16	0.16	1.29	74	3.13	1.00	74	2.3	76	0.099	98	98	3.3	-0.1	581	293	376	409	386	409	990	282	65	54	64	55	62	-0.046	7.69	0.23
197	31.603	31.513	0.16	0.16	1.29	74	3.12	1.00	74	2.3	76	0.093	100	100	3.3	0	575	293	375	409	386	408	980	280	65	54	64	55	62	-0.046	7.68	0.23
198	31.764	31.674	0.16	0.16	1.30	74	3.13	1.01	74	2.3	75	0.085	105	106	3.3	0	570	293	375	409	387	407	971	278	65	54	64	55	62	-0.045	7.7	0.23
199	31.925	31.835	0.16	0.16	1.29	74	3.13	1.00	74	2.3	75	0.098	98	98	3.2	-0.1	565	293	374	409	387	406	964	277	65	54	64	55	62	-0.046	7.7	0.23
200	32.086	31.995	0.16	0.16	1.29	74	3.12	1.00	74	2.3	75	0.100	97	97	3.2	0	560	294	374	408	387	405	958	275	65	54	64	55	62	-0.045	7.68	0.23
201	32.248	32.156	0.16	0.16	1.29	74	3.12	1.00	74	2.3	75	0.090	103	103	3.2	0	556	294	374	408	388	404	952	274	65	53	64	55	62	-0.045	7.64	0.22
202	32.409	32.317	0.16	0.16	1.29	74	3.13	1.00	74	2.3	75	0.095	100	100	3.2	0	551	294	373	408	388	403	947	272	64	53	64	55	62	-0.045	7.65	0.23
203	32.569	32.477	0.16	0.16	1.29	74	3.14	1.00	74	2.3	75	0.096	99	99	3.1	-0.1	548	294	373	408	388	402	943	271	64	53	64	55	62	-0.045	7.69	0.23
204	32.730	32.637	0.16	0.16	1.29	74	3.12	1.01	74	2.3	75	0.089	103	102	3.1	0	544	294	372	408	389	401	939	270	64	53	64	55	62	-0.045	7.57	0.22
205	32.891	32.799	0.16	0.16	1.29	74	3.13	1.00	74	2.3	75	0.085	105	106	3.1	0	540	295	371	408	389	401	935	269	64	53	64	55	62	-0.044	7.57	0.22
206	33.053	32.960	0.16	0.16	1.29	74	3.12	1.01	74	2.3	75	0.096	100	99	3.0	-0.1	537	295	371	407	390	400	932	267	64	53	64	55	62	-0.044	7.51	0.22
207	33.214	33.120	0.16	0.16	1.29	74	3.13	1.00	74	2.3	75	0.099	98	97	3.0	0	534	295	370	407	390	399	928	266	65	53	64	55	62	-0.044	7.52	0.22
208	33.375	33.280	0.16	0.16	1.28	74	3.14	1.00	74	2.3	75	0.093	101	100	3.0	0	531	295	370	407	390	399	926	266	64	53	64	55	62	-0.044	7.57	0.22
209	33.536	33.442	0.16	0.16	1.29	74	3.13	1.00	74	2.3	75	0.095	100	100	3.0	0	528	296	369	407	391	398	923	264	64	53	64	55	62	-0.044	7.54	0.22
210	33.697	33.602	0.16	0.16	1.29	74	3.12	1.00	74	2.3	74	0.096	99	99	2.9	-0.1	526	296	368	407	391	398	921	264	64	53	64	55	62	-0.043	7.55	0.22
211	33.858	33.763	0.16	0.16	1.29	74	3.13	1.01	74	2.3	75	0.096	99	99	2.9	0	523	296	368	406	391	397	919	263	64	53	64	55	62	-0.043	7.55	0.22
212	34.020	33.924	0.16	0.16	1.29	74	3.12	1.00	74	2.3	75	0.091	102	102	2.9	0	521	297	368	406	391	397	917	263	64	53	64	55	62	-0.043	7.51	0.22
213	34.181	34.084	0.16	0.16	1.29	74	3.13	1.00	74	2.3	75	0.090	102	102	2.9	0	519	297	367	406	392	396	917	262	65	53	64	55	62	-0.043	7.59	0.22
214	34.342	34.244	0.16	0.16	1.28	74	3.13	1.01	74	2.3	74	0.098	98	98	2.8	-0.1	518	298	367	406	392	396	917	262	65	53	64	55	62	-0.043	7.54	0.22
215	34.502	34.406	0.16	0.16	1.29	74	3.13	1.01	74	2.3	75	0.085	105	106	2.8	0	516	298	367	405	392	396	916	260	64	53	64	55	62	-0.043	7.61	0.22
216	34.663	34.567	0.16	0.16	1.29	74	3.13	1.00	74	2.3	74	0.095	100	100	2.8	0	515	299	366	405	393	396	916	261	64	53	64	55	62	-0.043	7.66	0.22

Wood Heater Test Data

u

Run: 2

Manufacturer: Kuma Stoves
Model: K-251
Tracking No.: 2464
Project No.: 0123WM014E
Test Date: 13-Apr-23
Beginning Clock Time: 10:52

Total Sampling Time: 377 min
Recording Interval: 1 min
Tunnel Diameter: 6
Background Sample Volume: 69.841 cubic feet

PM Control Modules: 335, 336
Dilution Tunnel MW(dry): 29.00 lb/lb-mole
Dilution Tunnel MW(wet): 28.78 lb/lb-mole
Dilution Tunnel H2O: 2.00 percent
Dilution Tunnel Static: -0.320 "H2O
Tunnel Area: 0.19635 ft2
Pitot Tube Cp: 0.99

Avg. Tunnel Velocity: 18.34 ft/sec.
Initial Tunnel Flow: 214.6 scfm
Average Tunnel Flow: 209.6 scfm
Post-Test Leak Check (1st Hr): 0.000 cfm @ 4 in. Hg
Post-Test Leak Check (1): 0.000 cfm @ 4 in. Hg
Post-Test Leak Check (2): 0.000 cfm @ 4 in. Hg
Average Test Piece Fuel Moisture: 21.88 Dry Basis %

Technician Signature:_____

Meter Box Y Factor: 1.004 (1) 1.002 (2) 1.012 (Amb)

Barometric Pressure:

Begin	Middle	End	Average
30.07	30.02	29.96	30.02

Room Air Velocity, fpn
0

OMNI Equipment Numbers: _____

Velocity Traverse Data

	Pt.1	Pt.2	Pt.3	Pt.4	Pt.5	Pt.6	Pt.7	Pt.8	Center	
Initial dP	0.068	0.090	0.090	0.062	0.080	0.088	0.090	0.072	0.099	"H2O
Temp:	76	76	76	76	76	76	76	76	76	°F

V_{strav} 18.80 ft/sec V_{scent} 20.97 ft/sec F_p 0.897

qwq

	Particulate Sampling Data														Fuel Weight (lb)		Temperature Data (°F)													Stack Gas Data		
Elapsed Time (min)	Gas Meter 1 (ft^3)	Gas Meter 2 (ft^3)	Sample Rate 1 (cfm)	Sample Rate 2 (cfm)	Orifice dH 1 ("H_2O)	Meter 1 Temp (°F)	Meter 1 Vacuum ("Hg)	Orifice dH 2 ("H_2O)	Meter 2 Temp (°F)	Meter 2 Vacuum ("Hg)	Dilution Tunnel (°F)	Dilution Tunnel Center dP	Pro. Rate 1	Pro. Rate 2	Scale Reading	Weight Change	Firebox Top	Firebox Bottom	Firebox Back	Firebox Left	Firebox Right	Avg. Stove Surface (Tot = ΔT)	Catalyst Exit	Stack	Filter 1	Dryer Exit 1	Filter 2	Dryer Exit 2	Ambient	Draft ("H_2O)	CO_2 (%)	CO (%)
217	34.824	34.727	0.16	0.16	1.29	74	3.13	1.00	74	2.3	75	0.091	102	101	2.7	-0.1	514	299	366	405	393	395	917	260	64	53	64	55	62	-0.043	7.66	0.22
218	34.986	34.887	0.16	0.16	1.28	74	3.13	1.00	74	2.3	75	0.091	102	101	2.7	0	513	300	366	404	393	395	917	260	64	53	64	55	62	-0.043	7.71	0.22
219	35.147	35.049	0.16	0.16	1.29	74	3.13	1.00	74	2.3	74	0.095	100	100	2.7	0	512	300	365	404	393	395	918	260	65	53	64	55	62	-0.044	7.68	0.23
220	35.308	35.209	0.16	0.16	1.29	74	3.13	1.00	74	2.3	74	0.085	105	105	2.7	0	512	300	365	403	394	395	919	260	65	53	64	55	62	-0.043	7.7	0.22
221	35.469	35.369	0.16	0.16	1.28	74	3.13	1.01	74	2.3	74	0.084	106	105	2.6	-0.1	511	300	364	403	394	394	921	260	65	53	64	55	62	-0.042	7.76	0.23
222	35.629	35.531	0.16	0.16	1.29	74	3.13	1.00	74	2.3	74	0.090	102	103	2.6	0	511	300	364	402	394	394	922	260	65	53	64	55	62	-0.043	7.79	0.23
223	35.790	35.691	0.16	0.16	1.29	74	3.13	1.00	74	2.3	74	0.084	106	105	2.6	0	511	301	364	402	394	394	925	259	65	53	64	55	62	-0.043	7.77	0.23
224	35.952	35.851	0.16	0.16	1.29	74	3.13	1.00	74	2.3	74	0.086	105	104	2.5	-0.1	512	301	364	402	395	395	928	260	65	53	64	55	62	-0.043	7.86	0.23
225	36.113	36.012	0.16	0.16	1.28	74	3.12	1.00	74	2.3	74	0.094	100	100	2.5	0	512	301	363	401	395	394	931	260	65	53	64	55	62	-0.043	7.92	0.23
226	36.274	36.173	0.16	0.16	1.29	74	3.12	1.00	74	2.3	74	0.096	99	99	2.5	0	513	302	363	401	395	395	935	261	64	53	64	55	62	-0.043	7.94	0.23
227	36.434	36.334	0.16	0.16	1.29	74	3.12	1.00	74	2.3	74	0.093	100	101	2.4	-0.1	514	302	363	400	396	395	939	261	65	53	64	55	62	-0.043	7.97	0.23
228	36.596	36.494	0.16	0.16	1.29	74	3.13	1.00	74	2.3	74	0.098	99	98	2.4	0	515	302	362	400	396	395	942	261	65	53	64	55	62	-0.043	8.03	0.23
229	36.757	36.656	0.16	0.16	1.29	74	3.13	1.00	74	2.3	74	0.100	97	98	2.4	0	517	302	362	399	397	395	946	262	65	53	64	55	62	-0.043	8.09	0.23
230	36.918	36.816	0.16	0.16	1.29	74	3.14	1.00	74	2.3	74	0.094	100	100	2.3	-0.1	518	303	362	399	397	396	949	262	65	53	64	55	63	-0.045	7.96	0.23
231	37.079	36.976	0.16	0.16	1.28	74	3.12	1.01	74	2.3	74	0.097	99	98	2.3	0	519	303	361	399	397	396	951	262	64	53	64	55	62	-0.044	7.97	0.23
232	37.240	37.138	0.16	0.16	1.29	74	3.13	1.01	74	2.3	73	0.095	99	100	2.3	0	520	303	360	398	398	396	951	263	64	53	64	55	62	-0.044	7.85	0.23
233	37.401	37.298	0.16	0.16	1.29	74	3.11	1.00	74	2.3	73	0.092	101	101	2.3	0	520	304	360	398	398	396	950	262	64	53	64	55	62	-0.044	7.74	0.23
234	37.562	37.459	0.16	0.16	1.29	74	3.13	1.00	74	2.3	73	0.097	98	99	2.2	-0.1	519	304	360	397	398	396	946	261	64	53	64	55	61	-0.044	7.59	0.23
235	37.724	37.620	0.16	0.16	1.29	74	3.13	1.01	74	2.3	73	0.099	98	98	2.2	0	518	304	360	397	399	396	940	261	64	53	64	55	62	-0.044	7.5	0.22
236	37.885	37.781	0.16	0.16	1.29	74	3.11	1.01	74	2.3	73	0.088	103	103	2.2	0	516	305	360	396	399	395	933	260	64	53	64	55	62	-0.044	7.36	0.22
237	38.047	37.941	0.16	0.16	1.28	74	3.13	1.00	74	2.3	73	0.087	105	103	2.2	0	514	305	360	396	399	395	926	259	64	53	64	55	62	-0.043	7.32	0.22
238	38.207	38.102	0.16	0.16	1.29	74	3.12	1.00	74	2.3	73	0.099	97	98	2.1	-0.1	511	305	360	395	400	394	918	257	64	53	64	55	62	-0.043	7.18	0.22
239	38.368	38.264	0.16	0.16	1.29	74	3.12	1.00	74	2.3	73	0.095	99	100	2.1	0	508	306	359	395	400	394	910	256	64	53	64	55	62	-0.043	7.1	0.21
240	38.529	38.424	0.16	0.16	1.29	74	3.11	1.00	74	2.3	73	0.098	98	97	2.1	0	505	306	359	395	400	393	903	255	64	53	64	55	62	-0.042	7.07	0.21
241	38.691	38.584	0.16	0.16	1.29	74	3.13	1.00	74	2.3	73	0.097	99	98	2.1	0	502	306	359	394	401	392	895	253	64	53	64	55	62	-0.042	7.03	0.21
242	38.852	38.746	0.16	0.16	1.29	74	3.13	1.00	74	2.3	73	0.086	105	105	2.0	-0.1	498	306	360	394	401	392	888	252	64	53	64	55	62	-0.042	6.96	0.21
243	39.013	38.907	0.16	0.16	1.28	74	3.11	1.00	74	2.3	74	0.099	98	98	2.0	0	495	307	359	393	401	391	882	251	64	53	64	55	62	-0.041	6.99	0.21
244	39.174	39.067	0.16	0.16	1.29	74	3.11	1.00	74	2.3	73	0.099	97	97	2.0	0	492	307	359	393	402	391	876	249	64	53	64	55	62	-0.041	6.89	0.21
245	39.335	39.228	0.16	0.16	1.29	74	3.13	1.00	74	2.3	73	0.093	101	101	2.0	0	488	307	359	392	402	390	870	249	64	53	64	55	62	-0.041	6.87	0.2
246	39.496	39.389	0.16	0.16	1.29	74	3.13	1.00	74	2.3	73	0.093	101	101	2.0	0	485	308	359	392	402	389	865	247	64	53	64	55	62	-0.041	6.83	0.2
247	39.658	39.549	0.16	0.16	1.29	74	3.11	1.00	74	2.3	74	0.088	104	103	1.9	-0.1	482	308	359	391	403	389	860	246	64	53	64	55	62	-0.041	6.81	0.2
248	39.819	39.710	0.16	0.16	1.29	74	3.13	1.00	74	2.3	73	0.094	100	100	1.9	0	479	308	359	391	403	388	853	244	64	53	64	55	62	-0.040	6.78	0.13
249	39.980	39.872	0.16	0.16	1.29	74	3.11	1.00	74	2.3	73	0.098	98	99	1.9	0	473	309	359	390	403	387	838	243	64	53	64	55	62	-0.040	6.79	0.13
250	40.141	40.032	0.16	0.16	1.29	74	3.13	1.00	74	2.3	73	0.094	100	100	1.9	0	467	309	359	390	404	386	822	240	64	53	64	55	62	-0.040	6.81	0.12
251	40.301	40.193	0.16	0.16	1.29	74	3.13	1.00	74	2.3	73	0.091	101	102	1.9	0	462	309	359	390	404	385	810	238	64	53	64	54	62	-0.039	6.71	0.12
252	40.463	40.353	0.16	0.16	1.29	74	3.12	1.00	74	2.3	73	0.088	104	103	1.9	0	457	309	359	389	405	384	799	236	64	53	64	55	62	-0.039	6.65	0.12
253	40.625	40.515	0.16	0.16	1.29	74	3.11	1.00	74	2.3	73	0.089	103	104	1.8	-0.1	452	310	359	389	405	383	789	235	64	53	64	54	62	-0.039	6.75	0.12
254	40.785	40.675	0.16	0.16	1.28	74	3.1	1.00	74	2.3	73	0.091	101	101	1.8	0	447	310	359	388	406	382	781	233	64	53	64	54	63	-0.039	6.69	0.12
255	40.945	40.836	0.16	0.16	1.28	74	3.1	1.00	74	2.3	73	0.095	99	100	1.8	0	443	310	359	388	407	381	775	231	64	53	64	54	63	-0.039	6.62	0.12
256	41.106	40.998	0.16	0.16	1.28	74	3.1	1.00	74	2.3	73	0.093	101	101	1.8	0	439	310	359	387	408	381	770	230	64	53	64	54	62	-0.038	6.59	0.12
257	41.266	41.158	0.16	0.16	1.28	74	3.1	1.00	74	2.3	73	0.100	96	96	1.8	0	435	311	359	387	408	380	765	228	64	53	64	54	62	-0.038	6.74	0.12
258	41.427	41.318	0.16	0.16	1.28	74	3.11	1.01	74	2.3	73	0.094	100	100	1.8	0	431	311	358	387	409	379	760	227	64	53	64	54	62	-0.038	6.69	0.12
259	41.588	41.479	0.16	0.16	1.28	74	3.11	1.00	74	2.3	73	0.098	98	98	1.7	-0.1	428	311	359	386	410	379	756	226	64	53	64	54	62	-0.038	6.61	0.12
260	41.748	41.641	0.16	0.16	1.27	74	3.11	1.00	74	2.3	73	0.099	97	98	1.7	0	425	312	359	386	411	379	752	225	64	53	64	54	62	-0.037	6.55	0.12

Wood Heater Test Data

u

Run: 2

Manufacturer: Kuma Stoves
Model: K-251
Tracking No.: 2464
Project No.: 0123WM014E
Test Date: 13-Apr-23
Beginning Clock Time: 10:52

Total Sampling Time: 377 min
Recording Interval: 1 min
Tunnel Diameter: 6
Background Sample Volume: 69.841 cubic feet

PM Control Modules: 335, 336
Dilution Tunnel MW(dry): 29.00 lb/lb-mole
Dilution Tunnel MW(wet): 28.78 lb/lb-mole
Dilution Tunnel H2O: 2.00 percent
Dilution Tunnel Static: -0.320 "H2O
Tunnel Area: 0.19635 ft2
Pitot Tube Cp: 0.99

Avg. Tunnel Velocity: 18.34 ft/sec.
Initial Tunnel Flow: 214.6 scfm
Average Tunnel Flow: 209.6 scfm
Post-Test Leak Check (1st Hr): 0.000 cfm @ 4 in. Hg
Post-Test Leak Check (1): 0.000 cfm @ 4 in. Hg
Post-Test Leak Check (2): 0.000 cfm @ 4 in. Hg
Average Test Piece Fuel Moisture: 21.88 Dry Basis %

Technician Signature:_____

Export to PDF

Meter Box Y Factor: 1.004 (1) 1.002 (2) 1.012 (Amb)

Barometric Pressure:	Begin	Middle	End	Average
	30.07	30.02	29.96	30.02

Room Air Velocity, fpn
0

OMNI Equipment Numbers: _____

Velocity Traverse Data

	Pt.1	Pt.2	Pt.3	Pt.4	Pt.5	Pt.6	Pt.7	Pt.8	Center	
Initial dP	0.068	0.090	0.090	0.062	0.080	0.088	0.090	0.072	0.099	"H2O
Temp:	76	76	76	76	76	76	76	76	76	°F

V_{strav} 18.80 ft/sec V_{scent} 20.97 ft/sec F_p 0.897

qwq

	Particulate Sampling Data														Fuel Weight (lb)		Temperature Data (°F)													Stack Gas Data		
Elapsed Time (min)	Gas Meter 1 (ft^3)	Gas Meter 2 (ft^3)	Sample Rate 1 (cfm)	Sample Rate 2 (cfm)	Orifice dH 1 ("H_2O)	Meter 1 Temp (°F)	Meter 1 Vacuum ("Hg)	Orifice dH 2 ("H_2O)	Meter 2 Temp (°F)	Meter 2 Vacuum ("Hg)	Dilution Tunnel (°F)	Dilution Tunnel Center dP	Pro. Rate 1	Pro. Rate 2	Scale Reading	Weight Change	Firebox Top	Firebox Bottom	Firebox Back	Firebox Left	Firebox Right	Avg. Stove Surface (Tot = ΔT)	Catalyst Exit	Stack	Filter 1	Dryer Exit 1	Filter 2	Dryer Exit 2	Ambient	Draft ("H_2O)	CO_2 (%)	CO (%)
261	41.908	41.801	0.16	0.16	1.28	74	3.11	1.00	74	2.3	73	0.100	96	96	1.7	0	422	312	359	385	411	378	748	224	64	53	64	54	62	-0.037	6.55	0.11
262	42.069	41.962	0.16	0.16	1.28	74	3.11	1.00	74	2.3	72	0.093	100	101	1.7	0	419	312	359	385	412	377	744	223	64	53	64	54	62	-0.037	6.53	0.12
263	42.229	42.124	0.16	0.16	1.28	74	3.11	1.01	74	2.3	72	0.097	98	99	1.7	0	417	312	358	384	413	377	742	222	64	53	64	54	62	-0.037	6.53	0.12
264	42.390	42.284	0.16	0.16	1.28	74	3.1	1.00	74	2.3	72	0.100	97	96	1.7	0	415	312	359	384	413	377	740	221	64	53	64	54	62	-0.037	6.45	0.12
265	42.551	42.444	0.16	0.16	1.27	74	3.11	1.01	74	2.3	72	0.093	100	100	1.6	-0.1	413	313	358	383	414	376	737	220	64	53	64	54	62	-0.037	6.45	0.12
266	42.711	42.606	0.16	0.16	1.28	74	3.1	1.00	74	2.3	72	0.096	98	100	1.6	0	411	312	358	382	414	375	734	219	64	53	64	54	62	-0.037	6.48	0.12
267	42.871	42.767	0.16	0.16	1.28	74	3.1	1.00	74	2.3	72	0.089	102	103	1.6	0	409	312	359	382	415	375	732	219	64	53	64	54	63	-0.036	6.48	0.12
268	43.032	42.927	0.16	0.16	1.28	74	3.1	1.00	74	2.3	72	0.096	99	98	1.6	0	407	313	359	381	415	375	730	218	64	53	64	54	62	-0.036	6.42	0.12
269	43.193	43.088	0.16	0.16	1.28	74	3.11	1.00	74	2.3	72	0.097	98	98	1.6	0	405	313	359	381	415	375	727	217	64	53	64	54	62	-0.037	6.38	0.11
270	43.353	43.249	0.16	0.16	1.27	75	3.11	1.00	74	2.3	72	0.094	99	100	1.6	0	403	312	360	380	415	374	725	217	64	53	64	54	63	-0.036	6.32	0.11
271	43.514	43.410	0.16	0.16	1.28	75	3.09	1.00	74	2.3	72	0.096	99	99	1.5	-0.1	402	312	360	379	415	374	722	216	64	53	64	54	63	-0.037	6.33	0.11
272	43.674	43.570	0.16	0.16	1.28	75	3.12	1.00	74	2.3	72	0.098	97	97	1.5	0	400	312	360	379	415	373	720	215	64	53	64	54	63	-0.036	6.29	0.11
273	43.835	43.732	0.16	0.16	1.28	75	3.11	1.00	74	2.3	72	0.098	98	99	1.5	0	399	312	360	378	415	373	718	215	64	53	64	54	62	-0.036	6.29	0.11
274	43.996	43.892	0.16	0.16	1.28	75	3.09	1.00	74	2.3	72	0.092	101	101	1.5	0	397	312	360	377	415	372	715	215	64	53	64	54	62	-0.036	6.31	0.11
275	44.156	44.053	0.16	0.16	1.27	75	3.11	1.00	74	2.3	72	0.090	101	102	1.5	0	395	312	360	377	415	372	712	214	64	53	64	54	62	-0.036	6.31	0.11
276	44.316	44.214	0.16	0.16	1.27	75	3.11	1.00	74	2.3	72	0.095	99	100	1.5	0	394	312	360	376	415	371	710	213	64	53	64	54	62	-0.036	6.32	0.11
277	44.476	44.375	0.16	0.16	1.27	75	3.11	1.00	74	2.3	72	0.092	100	101	1.4	-0.1	392	312	360	375	415	371	708	213	64	53	64	54	62	-0.035	6.27	0.11
278	44.637	44.536	0.16	0.16	1.28	75	3.1	1.00	75	2.3	72	0.089	102	103	1.4	0	391	312	361	375	414	371	706	212	64	53	64	54	63	-0.035	6.29	0.1
279	44.798	44.696	0.16	0.16	1.27	75	3.11	1.01	75	2.3	72	0.094	100	99	1.4	0	389	312	360	374	414	370	704	211	64	53	64	54	62	-0.036	6.24	0.1
280	44.959	44.858	0.16	0.16	1.28	75	3.1	1.00	75	2.3	72	0.094	100	100	1.4	0	388	313	361	374	414	370	702	211	64	53	64	54	63	-0.035	6.22	0.1
281	45.119	45.018	0.16	0.16	1.28	75	3.11	1.00	75	2.3	72	0.096	98	98	1.4	0	387	313	361	373	413	369	700	210	64	53	64	54	63	-0.035	6.16	0.1
282	45.279	45.179	0.16	0.16	1.28	75	3.11	1.00	75	2.3	72	0.096	98	99	1.4	0	386	313	362	372	413	369	698	210	65	53	64	54	63	-0.035	6.15	0.1
283	45.439	45.340	0.16	0.16	1.28	75	3.1	1.00	75	2.3	72	0.090	101	102	1.4	0	384	312	362	371	413	368	696	209	65	53	64	54	63	-0.035	6.19	0.1
284	45.601	45.501	0.16	0.16	1.27	75	3.1	1.00	75	2.3	72	0.098	98	98	1.3	-0.1	383	313	363	371	412	368	694	209	65	53	64	54	63	-0.035	6.17	0.1
285	45.761	45.661	0.16	0.16	1.28	75	3.09	1.00	75	2.3	72	0.098	97	97	1.3	0	382	313	364	370	412	368	693	208	64	53	64	54	63	-0.035	6.18	0.1
286	45.921	45.822	0.16	0.16	1.27	75	3.11	1.00	75	2.3	72	0.096	98	99	1.3	0	381	313	364	369	411	368	692	208	64	53	64	54	63	-0.035	6.18	0.1
287	46.081	45.984	0.16	0.16	1.28	75	3.11	1.00	75	2.3	72	0.100	96	97	1.3	0	380	313	364	368	411	367	690	208	65	53	64	54	63	-0.035	6.17	0.1
288	46.242	46.144	0.16	0.16	1.28	75	3.11	1.00	75	2.3	72	0.084	105	105	1.3	0	379	313	364	368	410	367	689	208	65	53	64	54	63	-0.034	6.24	0.1
289	46.403	46.305	0.16	0.16	1.27	75	3.11	1.00	75	2.3	72	0.086	104	104	1.3	0	378	313	364	367	410	366	687	208	65	53	64	54	63	-0.035	6.19	0.1
290	46.563	46.466	0.16	0.16	1.27	75	3.1	1.00	75	2.3	72	0.099	97	97	1.3	0	377	313	365	366	409	366	686	207	65	53	64	54	63	-0.035	6.1	0.09
291	46.723	46.627	0.16	0.16	1.27	75	3.11	0.99	75	2.3	72	0.094	99	100	1.2	-0.1	376	313	365	366	409	366	683	206	65	53	64	54	63	-0.034	6.13	0.09
292	46.884	46.787	0.16	0.16	1.28	75	3.1	1.00	75	2.3	72	0.098	98	97	1.2	0	375	313	365	365	408	365	681	206	65	53	64	54	63	-0.035	6.13	0.09
293	47.044	46.948	0.16	0.16	1.28	75	3.11	1.00	75	2.3	72	0.091	101	101	1.2	0	374	313	365	364	408	365	680	205	65	53	64	54	63	-0.035	6.14	0.09
294	47.205	47.109	0.16	0.16	1.27	75	3.1	1.00	75	2.3	72	0.099	97	97	1.2	0	373	314	366	363	407	365	680	206	65	53	64	54	63	-0.035	6.18	0.09
295	47.366	47.270	0.16	0.16	1.27	75	3.11	1.00	75	2.3	72	0.094	100	100	1.2	0	372	313	366	363	407	364	679	205	65	53	64	54	63	-0.034	6.23	0.09
296	47.526	47.431	0.16	0.16	1.28	75	3.1	1.00	75	2.3	72	0.097	98	98	1.2	0	371	312	366	362	406	363	677	205	65	53	64	54	63	-0.035	5.7	0.1
297	47.686	47.592	0.16	0.16	1.27	75	3.11	1.00	75	2.3	72	0.093	100	100	1.2	0	370	312	366	361	406	363	676	205	65	53	64	54	63	-0.035	5.63	0.1
298	47.846	47.753	0.16	0.16	1.28	75	3.11	1.00	75	2.3	72	0.095	99	99	1.1	-0.1	370	313	366	360	406	363	676	204	65	53	64	54	63	-0.035	5.66	0.11
299	48.008	47.913	0.16	0.16	1.28	75	3.1	1.00	75	2.3	72	0.089	103	102	1.1	0	369	313	365	360	405	362	677	204	65	53	64	54	63	-0.034	5.76	0.12
300	48.168	48.074	0.16	0.16	1.27	75	3.11	1.00	75	2.3	72	0.098	97	98	1.1	0	369	313	365	359	405	362	679	205	65	53	64	54	63	-0.034	5.75	0.12
301	48.328	48.235	0.16	0.16	1.28	75	3.12	1.00	75	2.3	72	0.092	100	101	1.1	0	368	313	365	358	404	362	681	204	65	53	64	54	63	-0.034	5.75	0.12
302	48.488	48.396	0.16	0.16	1.28	75	3.1	1.00	75	2.3	71	0.099	96	97	1.1	0	368	313	365	357	404	361	683	204	65	53	64	54	63	-0.034	5.75	0.13
303	48.649	48.557	0.16	0.16	1.28	75	3.11	1.00	75	2.3	72	0.098	98	98	1.1	0	368	313	364	356	403	361	685	204	65	53	64	54	63	-0.034	5.74	0.13
304	48.810	48.719	0.16	0.16	1.28	75	3.11	1.00	75	2.3	72	0.090	102	103	1.1	0	368	314	363	355	403	361	686	204	65	53	64	54	63	-0.034	5.74	0.13

Wood Heater Test Data

u

Run: 2

Manufacturer: Kuma Stoves
Model: K-251
Tracking No.: 2464
Project No.: 0123WM014E
Test Date: 13-Apr-23
Beginning Clock Time: 10:52

Total Sampling Time: 377 min
Recording Interval: 1 min
Tunnel Diameter: 6
Background Sample Volume: 69.841 cubic feet

PM Control Modules: 335, 336
Dilution Tunnel MW(dry): 29.00 lb/lb-mole
Dilution Tunnel MW(wet): 28.78 lb/lb-mole
Dilution Tunnel H2O: 2.00 percent
Dilution Tunnel Static: -0.320 "H2O
Tunnel Area: 0.19635 ft2
Pitot Tube Cp: 0.99

Avg. Tunnel Velocity: 18.34 ft/sec.
Initial Tunnel Flow: 214.6 scfm
Average Tunnel Flow: 209.6 scfm
Post-Test Leak Check (1st Hr): 0.000 cfm @ 4 in. Hg
Post-Test Leak Check (1): 0.000 cfm @ 4 in. Hg
Post-Test Leak Check (2): 0.000 cfm @ 4 in. Hg
Average Test Piece Fuel Moisture: 21.88 Dry Basis %

Technician Signature:_____

Meter Box Y Factor: 1.004 (1) 1.002 (2) 1.012 (Amb)

Export to PDF

Barometric Pressure:	Begin	Middle	End	Average
	30.07	30.02	29.96	30.02

Room Air Velocity, fpn
0

OMNI Equipment Numbers: _____

Velocity Traverse Data

	Pt.1	Pt.2	Pt.3	Pt.4	Pt.5	Pt.6	Pt.7	Pt.8	Center	
Initial dP	0.068	0.090	0.090	0.062	0.080	0.088	0.090	0.072	0.099	"H2O
Temp:	76	76	76	76	76	76	76	76	76	°F

V_{strav} 18.80 ft/sec V_{scent} 20.97 ft/sec F_p 0.897

qwq

	Particulate Sampling Data														Fuel Weight (lb)		Temperature Data (°F)													Stack Gas Data		
Elapsed Time (min)	Gas Meter 1 (ft^3)	Gas Meter 2 (ft^3)	Sample Rate 1 (cfm)	Sample Rate 2 (cfm)	Orifice dH 1 ("H_2O)	Meter 1 Temp (°F)	Meter 1 Vacuum ("Hg)	Orifice dH 2 ("H_2O)	Meter 2 Temp (°F)	Meter 2 Vacuum ("Hg)	Dilution Tunnel (°F)	Dilution Tunnel Center dP	Pro. Rate 1	Pro. Rate 2	Scale Reading	Weight Change	Firebox Top	Firebox Bottom	Firebox Back	Firebox Left	Firebox Right	Avg. Stove Surface (Tot = ΔT)	Catalyst Exit	Stack	Filter 1	Dryer Exit 1	Filter 2	Dryer Exit 2	Ambient	Draft ("H_2O)	CO_2 (%)	CO (%)
305	48.971	48.879	0.16	0.16	1.28	75	3.11	1.00	75	2.3	71	0.100	97	96	1.0	-0.1	368	314	363	355	402	360	687	205	65	53	64	54	63	-0.035	5.71	0.13
306	49.131	49.039	0.16	0.16	1.27	75	3.12	1.00	75	2.3	71	0.096	98	98	1.0	0	368	314	362	354	402	360	688	205	65	53	64	54	64	-0.035	5.68	0.13
307	49.291	49.201	0.16	0.16	1.28	75	3.1	1.00	75	2.3	72	0.100	96	97	1.0	0	368	314	361	353	402	360	688	205	65	53	64	54	63	-0.035	5.68	0.13
308	49.452	49.362	0.16	0.16	1.28	75	3.12	1.00	75	2.3	72	0.101	96	96	1.0	0	367	313	361	352	401	359	687	205	65	53	64	54	63	-0.034	5.64	0.14
309	49.613	49.522	0.16	0.16	1.28	75	3.1	1.00	75	2.3	72	0.098	98	97	1.0	0	367	313	360	351	400	358	688	205	65	53	64	54	63	-0.034	5.66	0.14
310	49.774	49.683	0.16	0.16	1.28	75	3.1	1.00	75	2.3	72	0.092	101	101	1.0	0	367	313	359	350	400	358	689	204	65	53	64	54	63	-0.034	5.7	0.14
311	49.934	49.845	0.16	0.16	1.27	75	3.1	1.00	75	2.3	72	0.095	99	100	1.0	0	367	313	358	350	399	357	691	204	65	53	64	54	63	-0.035	5.75	0.14
312	50.094	50.005	0.16	0.16	1.27	75	3.11	1.00	75	2.3	72	0.098	97	97	0.9	-0.1	367	313	357	349	399	357	691	204	65	53	64	54	63	-0.034	5.76	0.13
313	50.255	50.166	0.16	0.16	1.28	75	3.11	1.00	75	2.3	72	0.097	98	98	0.9	0	367	313	356	348	398	356	690	204	65	53	64	54	63	-0.034	5.89	0.13
314	50.415	50.327	0.16	0.16	1.28	75	3.12	1.00	75	2.3	72	0.094	99	100	0.9	0	366	313	356	347	397	356	689	204	65	53	64	54	63	-0.034	5.83	0.13
315	50.577	50.488	0.16	0.16	1.28	75	3.1	1.00	75	2.3	71	0.099	98	97	0.9	0	366	313	355	347	397	356	688	204	65	53	64	54	63	-0.034	5.9	0.13
316	50.737	50.649	0.16	0.16	1.27	75	3.12	1.00	75	2.3	71	0.098	97	98	0.9	0	365	313	355	346	396	355	687	204	65	53	64	54	63	-0.034	5.85	0.12
317	50.897	50.810	0.16	0.16	1.28	75	3.11	1.00	75	2.3	71	0.088	102	103	0.9	0	365	313	354	345	395	354	686	204	65	53	64	54	62	-0.035	5.83	0.12
318	51.058	50.972	0.16	0.16	1.28	75	3.11	1.00	75	2.3	71	0.093	100	101	0.9	0	364	313	353	344	394	354	684	203	65	53	64	54	63	-0.035	5.8	0.11
319	51.218	51.132	0.16	0.16	1.28	75	3.11	1.00	75	2.3	70	0.098	97	97	0.8	-0.1	363	313	353	344	394	353	680	203	65	53	64	54	62	-0.035	5.76	0.11
320	51.380	51.293	0.16	0.16	1.28	75	3.1	1.00	75	2.3	70	0.086	105	104	0.8	0	362	312	351	343	393	352	676	202	65	53	64	54	63	-0.035	5.76	0.11
321	51.541	51.454	0.16	0.16	1.27	75	3.11	1.00	75	2.3	70	0.088	103	103	0.8	0	361	312	351	342	393	352	674	202	65	53	64	54	63	-0.034	5.72	0.11
322	51.701	51.615	0.16	0.16	1.27	75	3.1	1.00	75	2.3	71	0.086	104	104	0.8	0	360	312	350	341	392	351	671	201	65	53	64	54	63	-0.034	5.68	0.11
323	51.861	51.776	0.16	0.16	1.28	75	3.11	1.00	75	2.3	71	0.091	101	101	0.8	0	359	311	351	341	392	351	669	200	65	53	64	54	62	-0.034	5.66	0.11
324	52.022	51.937	0.16	0.16	1.28	75	3.11	1.00	75	2.3	71	0.095	99	99	0.8	0	358	311	350	340	392	350	666	200	65	53	64	54	63	-0.034	5.58	0.1
325	52.183	52.099	0.16	0.16	1.28	75	3.11	1.00	75	2.3	71	0.097	98	99	0.8	0	357	311	350	339	391	350	663	200	65	53	64	54	63	-0.034	5.63	0.1
326	52.344	52.259	0.16	0.16	1.27	75	3.11	1.00	75	2.3	71	0.097	98	98	0.8	0	356	311	349	339	391	349	660	199	65	53	64	54	63	-0.034	5.6	0.1
327	52.504	52.420	0.16	0.16	1.28	75	3.11	1.00	75	2.3	71	0.098	97	98	0.7	-0.1	355	312	349	338	391	349	658	199	65	53	64	54	63	-0.034	5.6	0.1
328	52.664	52.581	0.16	0.16	1.28	75	3.11	1.00	75	2.3	71	0.096	98	99	0.7	0	354	312	348	338	391	349	655	198	65	53	64	54	63	-0.034	5.58	0.1
329	52.825	52.742	0.16	0.16	1.28	75	3.11	1.00	75	2.3	72	0.096	99	99	0.7	0	352	311	348	337	390	348	652	198	65	53	64	54	63	-0.033	5.6	0.1
330	52.986	52.903	0.16	0.16	1.28	75	3.11	1.00	75	2.3	72	0.092	101	101	0.7	0	351	309	347	336	390	347	649	197	65	53	64	54	63	-0.033	5.59	0.1
331	53.147	53.063	0.16	0.16	1.28	75	3.1	1.00	75	2.3	72	0.091	101	101	0.7	0	350	308	347	336	390	346	646	197	65	53	64	54	63	-0.033	5.59	0.1
332	53.307	53.225	0.16	0.16	1.28	75	3.1	1.00	75	2.3	71	0.097	97	99	0.7	0	349	309	347	335	390	346	644	196	65	53	64	54	63	-0.033	5.63	0.1
333	53.467	53.386	0.16	0.16	1.27	75	3.11	1.00	75	2.3	72	0.091	101	101	0.7	0	348	308	347	334	389	345	643	196	65	53	64	54	63	-0.033	5.61	0.1
334	53.628	53.546	0.16	0.16	1.28	75	3.1	1.00	75	2.3	72	0.087	104	103	0.6	-0.1	347	309	347	334	389	345	642	196	65	53	64	54	63	-0.033	5.64	0.1
335	53.788	53.708	0.16	0.16	1.27	75	3.1	0.99	75	2.3	71	0.098	97	98	0.6	0	346	309	346	333	389	345	640	195	65	53	64	54	63	-0.033	5.72	0.1
336	53.950	53.869	0.16	0.16	1.27	75	3.11	1.00	75	2.3	71	0.094	100	100	0.6	0	346	308	347	333	388	344	640	195	65	53	64	54	63	-0.033	5.84	0.1
337	54.110	54.029	0.16	0.16	1.27	75	3.1	1.00	75	2.3	72	0.098	97	97	0.6	0	345	307	347	332	388	344	640	195	65	53	64	54	63	-0.032	5.89	0.1
338	54.270	54.190	0.16	0.16	1.28	75	3.1	1.00	75	2.3	72	0.099	97	97	0.6	0	345	307	346	331	388	343	640	195	65	53	64	54	63	-0.032	5.91	0.1
339	54.430	54.352	0.16	0.16	1.27	75	3.1	1.00	75	2.3	72	0.093	100	101	0.6	0	344	307	345	331	388	343	639	195	65	53	64	54	63	-0.032	5.91	0.1
340	54.591	54.512	0.16	0.16	1.28	75	3.11	1.00	75	2.3	72	0.095	99	99	0.6	0	343	307	345	330	387	342	638	195	65	53	64	54	63	-0.033	5.89	0.1
341	54.753	54.673	0.16	0.16	1.27	75	3.1	1.00	75	2.3	72	0.093	101	100	0.6	0	343	307	345	330	387	342	637	194	65	53	64	54	63	-0.032	5.97	0.1
342	54.913	54.835	0.16	0.16	1.27	75	3.12	1.00	75	2.3	72	0.091	101	102	0.5	-0.1	342	307	345	329	387	342	636	194	65	53	64	54	64	-0.033	5.95	0.09
343	55.073	54.995	0.16	0.16	1.27	75	3.1	0.99	75	2.3	72	0.098	97	97	0.5	0	341	307	345	329	387	342	634	194	65	53	64	54	63	-0.033	6.04	0.09
344	55.233	55.156	0.16	0.16	1.28	75	3.11	1.00	75	2.3	71	0.095	98	99	0.5	0	340	308	345	328	387	342	631	194	65	53	64	54	63	-0.033	6.03	0.09
345	55.394	55.317	0.16	0.16	1.28	75	3.11	1.00	75	2.3	71	0.086	104	104	0.5	0	339	308	345	328	387	341	628	193	65	53	64	54	63	-0.032	6.03	0.09
346	55.556	55.478	0.16	0.16	1.27	75	3.1	1.00	75	2.3	72	0.093	101	100	0.5	0	338	308	346	327	386	341	626	193	65	53	64	54	64	-0.032	6.01	0.09
347	55.716	55.639	0.16	0.16	1.27	75	3.11	1.00	75	2.3	71	0.100	96	97	0.5	0	338	308	346	327	386	341	625	192	65	53	64	54	63	-0.032	6.04	0.09
348	55.876	55.800	0.16	0.16	1.28	75	3.1	1.00	75	2.3	71	0.087	103	104	0.5	0	337	308	346	326	386	341	625	193	65	53	64	54	64	-0.032	6.08	0.09

Wood Heater Test Data

u

Run: 2

Manufacturer: Kuma Stoves
Model: K-251
Tracking No.: 2464
Project No.: 0123WM014E
Test Date: 13-Apr-23
Beginning Clock Time: 10:52

Total Sampling Time: 377 min
Recording Interval: 1 min
Tunnel Diameter: 6
Background Sample Volume: 69.841 cubic feet

PM Control Modules: 335, 336
Dilution Tunnel MW(dry): 29.00 lb/lb-mole
Dilution Tunnel MW(wet): 28.78 lb/lb-mole
Dilution Tunnel H2O: 2.00 percent
Dilution Tunnel Static: -0.320 "H2O
Tunnel Area: 0.19635 ft2
Pitot Tube Cp: 0.99

Avg. Tunnel Velocity: 18.34 ft/sec.
Initial Tunnel Flow: 214.6 scfm
Average Tunnel Flow: 209.6 scfm
Post-Test Leak Check (1st Hr): 0.000 cfm @ 4 in. Hg
Post-Test Leak Check (1): 0.000 cfm @ 4 in. Hg
Post-Test Leak Check (2): 0.000 cfm @ 4 in. Hg
Average Test Piece Fuel Moisture: 21.88 Dry Basis %

Technician Signature:_____

Meter Box Y Factor: 1.004 (1) 1.002 (2) 1.012 (Amb)

Barometric Pressure:

Begin	Middle	End	Average
30.07	30.02	29.96	30.02

Room Air Velocity, fpn
0

OMNI Equipment Numbers: _____

Velocity Traverse Data

	Pt.1	Pt.2	Pt.3	Pt.4	Pt.5	Pt.6	Pt.7	Pt.8	Center	
Initial dP	0.068	0.090	0.090	0.062	0.080	0.088	0.090	0.072	0.099	"H2O
Temp:	76	76	76	76	76	76	76	76	76	°F

V_{strav} 18.80 ft/sec V_{scent} 20.97 ft/sec F_p 0.897

qwq

	Particulate Sampling Data														Fuel Weight (lb)		Temperature Data (°F)													Stack Gas Data		
Elapsed Time (min)	Gas Meter 1 (ft^3)	Gas Meter 2 (ft^3)	Sample Rate 1 (cfm)	Sample Rate 2 (cfm)	Orifice dH 1 ("H_2O)	Meter 1 Temp (°F)	Meter 1 Vacuum ("Hg)	Orifice dH 2 ("H_2O)	Meter 2 Temp (°F)	Meter 2 Vacuum ("Hg)	Dilution Tunnel (°F)	Dilution Tunnel Center dP	Pro. Rate 1	Pro. Rate 2	Scale Reading	Weight Change	Firebox Top	Firebox Bottom	Firebox Back	Firebox Left	Firebox Right	Avg. Stove Surface (Tot = ΔT)	Catalyst Exit	Stack	Filter 1	Dryer Exit 1	Filter 2	Dryer Exit 2	Ambient	Draft ("H_2O)	CO_2 (%)	CO (%)
349	56.036	55.962	0.16	0.16	1.28	75	3.11	1.00	75	2.3	71	0.092	100	101	0.4	-0.1	337	308	347	326	385	341	626	192	65	53	64	54	63	-0.032	6.04	0.1
350	56.197	56.122	0.16	0.16	1.28	75	3.11	0.99	75	2.3	72	0.090	102	101	0.4	0	336	308	346	326	385	340	626	192	65	53	64	54	64	-0.032	6.06	0.09
351	56.358	56.282	0.16	0.16	1.28	75	3.11	1.00	75	2.3	71	0.085	105	104	0.4	0	336	308	347	325	385	340	626	192	65	53	64	54	63	-0.032	6.01	0.09
352	56.519	56.444	0.16	0.16	1.27	75	3.1	1.00	75	2.3	71	0.087	104	104	0.4	0	336	308	347	325	385	340	625	192	65	53	64	54	63	-0.032	6	0.09
353	56.679	56.605	0.16	0.16	1.27	75	3.11	1.00	75	2.3	71	0.099	96	97	0.4	0	335	308	347	325	385	340	625	191	65	53	64	54	63	-0.032	5.94	0.09
354	56.840	56.766	0.16	0.16	1.28	75	3.12	1.00	75	2.3	71	0.094	100	100	0.4	0	335	308	347	324	384	340	625	192	65	53	64	54	63	-0.032	5.96	0.1
355	57.000	56.927	0.16	0.16	1.28	75	3.1	1.00	75	2.3	71	0.087	103	104	0.3	-0.1	335	308	348	324	384	340	626	191	65	53	64	54	63	-0.032	5.95	0.1
356	57.161	57.088	0.16	0.16	1.28	75	3.11	1.00	75	2.3	71	0.093	100	100	0.3	0	335	308	349	324	384	340	627	192	65	53	64	54	63	-0.032	5.96	0.1
357	57.322	57.249	0.16	0.16	1.27	76	3.12	0.99	75	2.3	72	0.088	103	103	0.3	0	335	308	349	323	383	340	628	192	65	53	65	54	63	-0.032	5.96	0.1
358	57.483	57.409	0.16	0.16	1.27	76	3.1	1.00	75	2.3	71	0.099	97	97	0.3	0	335	308	349	323	383	340	629	191	65	53	65	54	63	-0.032	5.92	0.1
359	57.643	57.571	0.16	0.16	1.27	76	3.11	1.00	75	2.3	71	0.087	103	104	0.3	0	335	308	349	323	383	340	629	192	65	53	65	54	64	-0.032	5.87	0.11
360	57.803	57.732	0.16	0.16	1.27	76	3.11	1.00	75	2.3	71	0.087	103	104	0.3	0	336	309	350	322	382	340	633	193	65	53	65	54	63	-0.033	5.96	0.13
361	57.964	57.893	0.16	0.16	1.28	76	3.11	1.00	75	2.3	72	0.090	102	102	0.3	0	336	309	350	322	382	340	639	193	65	53	65	54	63	-0.032	5.96	0.13
362	58.125	58.054	0.16	0.16	1.28	76	3.1	1.00	75	2.3	72	0.085	105	105	0.3	0	338	309	350	322	382	340	645	193	65	53	65	54	63	-0.032	6.04	0.13
363	58.286	58.216	0.16	0.16	1.27	76	3.11	1.00	75	2.3	72	0.094	100	100	0.2	-0.1	339	309	350	322	381	340	649	194	65	53	65	54	63	-0.032	6.04	0.13
364	58.446	58.376	0.16	0.16	1.27	76	3.1	0.99	75	2.3	72	0.087	103	103	0.2	0	340	309	350	321	381	340	652	194	65	53	65	54	63	-0.032	6.11	0.14
365	58.606	58.537	0.16	0.16	1.28	76	3.12	1.00	75	2.3	72	0.091	101	101	0.2	0	341	309	350	321	380	340	656	195	65	53	65	54	64	-0.032	6.12	0.14
366	58.767	58.698	0.16	0.16	1.27	76	3.1	1.00	75	2.3	71	0.092	101	101	0.2	0	342	309	349	321	380	340	659	196	65	53	65	54	64	-0.033	6.1	0.14
367	58.929	58.859	0.16	0.16	1.27	76	3.11	1.00	75	2.3	71	0.087	104	104	0.2	0	343	309	350	321	379	340	662	196	65	53	65	54	64	-0.033	6.03	0.14
368	59.089	59.020	0.16	0.16	1.27	76	3.12	1.00	76	2.3	72	0.098	97	98	0.2	0	344	310	350	321	379	341	664	197	65	53	65	54	63	-0.033	6.07	0.14
369	59.249	59.181	0.16	0.16	1.28	76	3.11	1.00	75	2.3	72	0.086	103	104	0.1	-0.1	346	310	350	321	378	341	667	197	65	53	65	54	63	-0.033	6.09	0.14
370	59.410	59.343	0.16	0.16	1.28	76	3.11	1.00	75	2.3	72	0.090	102	103	0.1	0	347	310	350	321	378	341	669	198	65	53	65	54	63	-0.033	6.02	0.15
371	59.570	59.504	0.16	0.16	1.28	76	3.1	1.00	75	2.3	72	0.086	103	104	0.1	0	348	310	350	321	377	341	673	198	65	53	65	54	63	-0.033	6.06	0.15
372	59.732	59.664	0.16	0.16	1.27	76	3.11	1.00	76	2.3	72	0.089	103	102	0.1	0	349	310	350	321	377	341	675	198	65	53	65	54	64	-0.033	6.02	0.15
373	59.892	59.825	0.16	0.16	1.28	76	3.11	1.00	76	2.3	72	0.091	101	101	0.1	0	350	311	349	321	376	341	677	199	65	53	65	54	64	-0.033	6.01	0.15
374	60.053	59.987	0.16	0.16	1.27	76	3.1	1.00	76	2.3	72	0.097	98	99	0.1	0	350	311	349	321	375	341	678	199	65	53	65	54	64	-0.034	6.01	0.15
375	60.213	60.147	0.16	0.16	1.27	76	3.1	1.00	76	2.3	72	0.098	97	97	0.1	0	351	311	349	321	375	341	679	199	65	53	65	54	64	-0.034	5.91	0.15
376	60.374	60.308	0.16	0.16	1.28	76	3.11	1.00	76	2.3	72	0.091	101	101	0.1	0	352	311	349	321	374	341	679	199	65	53	65	54	63	-0.034	5.94	0.15
377	60.535	60.470	0.16	0.16	1.27	76	3.11	1.00	76	2.3	72	0.092	101	101	0.0	-0.1	353	311	350	321	374	342	679	199	65	53	65	54	64	-0.033	5.95	0.15

Wood Heater Lab Data - ASTM E2780 / ASTM E2515

Manufacturer: Kuma Stoves
Model: K-251
Tracking No.: 2464
Project No.: 0123WM014E
Run #: 2
Date: 4/13/23

Equipment Numbers:

TRAIN 1 (First Hour emissions)

Sample Component	Reagent	Filter, Probe or Dish #	Weights		
			Final, mg	Tare, mg	Particulate, mg
B. Front filter catch	Filter	E868	121.1	118.4	2.7
C. Rear filter catch	Filter	E869	119.3	119.2	0.1
D. Probe catch*	Probe	29	114276.0	114275.8	0.2
E. Filter seals catch*	Seals	S472	3341.8	3341.6	0.2

Sub-Total Total Particulate, mg: 3.2

TRAIN 1 (Post First Hour Change-out)

Sample Component	Reagent	Filter, Probe or Dish #	Weights		
			Final, mg	Tare, mg	Particulate, mg
B. Front filter catch	Filter	E870	126.5	117.8	8.7
C. Rear filter catch	Filter	E871	118.7	119.2	-0.5
D. Probe catch*	Probe	65	117080.0	117079.9	0.1
E. Filter seals catch*	Seals	S473	4113.9	4112.6	1.3

Sub-Total Total Particulate, mg: 9.6

Train 1 Aggregate Total Particulate, mg: **12.8**

TRAIN 2

Sample Component	Reagent	Filter, Probe or Dish #	Weights		
			Final, mg	Tare, mg	Particulate, mg
A. Front filter catch	Filter	E872	128.7	117.8	10.9
B. Rear filter catch	Filter	E873	119.6	118.7	0.9
C. Probe catch*	Probe	84	117635.6	117635.0	0.6
D. Filter seals catch*	Seals	S474	3308.6	3308.3	0.3

Total Particulate, mg: **12.7**

AMBIENT

Sample Component	Reagent	Filter # or Probe #	Weights		
			Final, mg	Tare, mg	Particulate, mg
A. Front filter catch*	Filter	E874	118.1	118.0	0.1

Total Particulate, mg: **0.1**

*Particulate catch that results in a negative number, is assumed to be zero for probes and seals, negative numbers for filters are assumed to be part of the seal weight.

Component	Equations:
A. Front filter catch	Final (mg) - Tare (mg) = Particulate, mg
B. Rear filter catch	Final (mg) - Tare (mg) = Particulate, mg
C. Probe catch	Final (mg) - Tare (mg) = Particulate, mg

Technician Signature:_____

Wood Heater Test Results - ASTM E2780 / ASTM E2515

Manufacturer: Kuma Stoves
Model: K-251
Project No.: 0123WM014E
Tracking No.: 2464
Run: 2
Test Date: 04/13/23

Technician Signature:_____

Burn Rate	**1.04**	**kg/hr dry**
Average Tunnel Temperature	75	degrees Fahrenheit
Average Gas Velocity in Dilution Tunnel - vs	18.34	feet/second
Average Gas Flow Rate in Dilution Tunnel - Qsd	12579.0	dscf/hour
Average Delta p	0.094	inches H20
Total Time of Test	377	minutes

	AMBIENT		SAMPLE TRAIN 1		SAMPLE TRAIN 2		FIRST HOUR FILTER (TRAIN 1)	
Total Sample Volume - Vm	69.841	cubic feet	60.535	cubic feet	60.470	cubic feet	9.569	cubic feet
Average Gas Meter Temperature	62	degrees Fahrenheit	73	degrees Fahrenheit	73	degrees Fahrenheit	67	degrees Fahrenheit
Total Sample Volume (Standard Conditions) - Vmstd	71.747	dscf	60.604	dscf	60.362	dscf	9.681	dscf
Total Particulates - m_n	0.1	mg	12.8	mg	12.7	mg	3.2	mg
Particulate Concentration (dry-standard) - C_r/C_s	0.000001	grams/dscf	0.00021	grams/dscf	0.00021	grams/dscf	0.00033	grams/dscf
Total Particulate Emissions - E_T	0.11	grams	16.58	grams	16.52	grams	4.16	grams
Particulate Emission Rate	0.02	grams/hour	2.64	grams/hour	2.63	grams/hour	4.16	grams/hour
Emissions Factor			2.55	g/kg	2.54	g/kg	2.79	g/kg
Difference from Average Total Particulate Emissions			0.03	grams	0.03	grams		

Final Average Results		
Complete Test Run		
Total Particulate Emissions - E_T	16.55	grams
Particulate Emission Rate	**2.63**	**grams/hour**
Emissions Factor	2.54	grams/kg
First Hour Emissions		
Total Particulate Emissions - E_T	4.16	grams
Particulate Emission Rate	4.16	grams/hour
Emissions Factor	2.79	grams/kg
7.5% of Average Total Particulate Emissions	1.24	grams

Quality Checks	Requirement	Measured / Observed: First Hour	Train 1	Train 2	Complies?
Filter Temps, °F	< 90	63	65	65	OK
Filter Face Velocity, fpm	< 30	8.68	8.68	8.68	OK
Dryer Exit Temp, °F	< 80	50	54	55	OK
Leakage Rate, cfm < 4% of avg sample rate or < 0.01 cfm, lesser of the two	0.01	0.000	0.000	0.000	OK
Neg. Probe Weight	=> 0	0.2	0.1	0.6	OK
Pro-Rate Variation	< 90 for < 10% of θ	0.00%	0.00%	0.00%	OK
	> 110 for < 10% of θ	0.00%	0.00%	0.00%	OK
	# Readings < 80%	0	0	0	OK
	# Readings > 120%	0	0	0	OK
Ambient Temp, °F (min / max)	< 55	59			OK
	> 90	64			OK
Train Precision	(*A*) Within 7.5%	0.2%			OK
One of *A* or *B* must	(*B*) Within 0.5 g/kg	0.01			
Stove Surface ΔT	Within 125 °F	74			OK
Room Air Velocity	< 50 fpm	0			OK

Wood Heater Lab Data - ASTM E2780 / ASTM E2515

Manufacturer:	Kuma Stoves	Equipment Numbers:	
Model:	K-251		
Tracking No.:	2464		
Project No.:	0123WM014E		
Run #:	2		
Date:	4/13/23		

Uncorrected

TRAIN 1 (First Hour emissions)

Sample Component	Reagent	Filter, Probe or Dish #	Weights		
			Final, mg	Tare, mg	Particulate, mg
B. Front filter catch	Filter	E868	121.1	118.4	2.7
C. Rear filter catch	Filter	E869	119.3	119.2	0.1
D. Probe catch*	Probe	29	114276.0	114275.8	0.2
E. Filter seals catch*	Seals	S472	3341.8	3341.6	0.2

Sub-Total Total Particulate, mg: 3.2

TRAIN 1 (Post First Hour Change-out)

Sample Component	Reagent	Filter, Probe or Dish #	Weights		
			Final, mg	Tare, mg	Particulate, mg
B. Front filter catch	Filter	E870	126.5	117.8	8.7
C. Rear filter catch	Filter	E871	118.7	119.2	0.0
D. Probe catch*	Probe	65	117080.0	117079.9	0.1
E. Filter seals catch*	Seals	S473	4113.9	4112.6	1.3

Sub-Total Total Particulate, mg: 10.1

Train 1 Aggregate Total Particulate, mg: **13.3**

TRAIN 2

Sample Component	Reagent	Filter, Probe or Dish #	Weights		
			Final, mg	Tare, mg	Particulate, mg
A. Front filter catch	Filter	E872	128.7	117.8	10.9
B. Rear filter catch	Filter	E873	119.6	118.7	0.9
C. Probe catch*	Probe	84	117635.6	117635.0	0.6
D. Filter seals catch*	Seals	S474	3308.6	3308.3	0.3

Total Particulate, mg: **12.7**

AMBIENT

Sample Component	Reagent	Filter # or Probe #	Weights		
			Final, mg	Tare, mg	Particulate, mg
A. Front filter catch*	Filter	E874	118.1	118.0	0.1

Total Particulate, mg: **0.1**

*Particulate catch that results in a negative number, is assumed to be zero for probes and seals, negative numbers for filters are assumed to be part of the seal weight.

Component	Equations:
A. Front filter catch	Final (mg) - Tare (mg) = Particulate, mg
B. Rear filter catch	Final (mg) - Tare (mg) = Particulate, mg
C. Probe catch	Final (mg) - Tare (mg) = Particulate, mg

Technician Signature:_____

Wood Heater Test Results - ASTM E2780 / ASTM E2515

Manufacturer:	Kuma Stoves
Model:	K-251
Project No.:	0123WM014E
Tracking No.:	2464
Run:	2
Test Date:	04/13/23

Technician Signature:_____

Burn Rate	**1.04**	**kg/hr dry**
Average Tunnel Temperature	75	degrees Fahrenheit
Average Gas Velocity in Dilution Tunnel - vs	18.34	feet/second
Average Gas Flow Rate in Dilution Tunnel - Qsd	12579.0	dscf/hour
Average Delta p	0.094	inches H20
Total Time of Test	377	minutes

Uncorrected

	AMBIENT		SAMPLE TRAIN 1		SAMPLE TRAIN 2		FIRST HOUR FILTER (TRAIN 1)	
Total Sample Volume - Vm	69.841	cubic feet	60.535	cubic feet	60.470	cubic feet	9.569	cubic feet
Average Gas Meter Temperature	62	degrees Fahrenheit	73	degrees Fahrenheit	73	degrees Fahrenheit	67	degrees Fahrenheit
Total Sample Volume (Standard Conditions) - Vmstd	71.747	dscf	60.604	dscf	60.362	dscf	9.681	dscf
Total Particulates - m_n	0.1	mg	13.3	mg	12.7	mg	3.2	mg
Particulate Concentration (dry-standard) - C_r/C_s	0.000001	grams/dscf	0.00022	grams/dscf	0.00021	grams/dscf	0.00033	grams/dscf
Total Particulate Emissions - E_T	0.11	grams	17.24	grams	16.52	grams	4.16	grams
Particulate Emission Rate	0.02	grams/hour	2.74	grams/hour	2.63	grams/hour	4.16	grams/hour
Emissions Factor			2.65	g/kg	2.54	g/kg	2.79	g/kg
Difference from Average Total Particulate Emissions			0.36	grams	0.36	grams		

Final Average Results		
Complete Test Run		
Total Particulate Emissions - E_T	16.88	grams
Particulate Emission Rate	**2.69**	**grams/hour**
Emissions Factor	2.59	grams/kg
First Hour Emissions		
Total Particulate Emissions - E_T	4.16	grams
Particulate Emission Rate	4.16	grams/hour
Emissions Factor	2.79	grams/kg
7.5% of Average Total Particulate Emissions	1.27	grams

Quality Checks	Requirement	Measured / Observed: First Hour	Train 1	Train 2	Complies?
Filter Temps, °F	< 90	63	65	65	OK
Filter Face Velocity, fpm	< 30	8.68	8.68	8.68	OK
Dryer Exit Temp, °F	< 80	50	54	55	OK
Leakage Rate, cfm < 4% of avg sample rate or < 0.01 cfm, lesser of the two	0.01	0.000	0.000	0.000	OK
Neg. Probe Weight	=> 0	0.2	0.1	0.6	OK
Pro-Rate Variation	< 90 for < 10% of θ	0.00%	0.00%	0.00%	OK
	> 110 for < 10% of θ	0.00%	0.00%	0.00%	OK
	# Readings < 80%	0	0	0	OK
	# Readings > 120%	0	0	0	OK
Ambient Temp, °F (min / max)	< 55	59			OK
	> 90	64			OK
Train Precision One of *A* or *B* must	(*A*) Within 7.5%	2.1%			OK
	(*B*) Within 0.5 g/kg	0.11			
Stove Surface ΔT	Within 125 °F	74			OK
Room Air Velocity	< 50 fpm	0			OK

VERSION:	2.4	4/15/2010			
Manufacturer:	Kuma Stoves		Appliance Type:	Cat	(Cat, Non-Cat, Pellet)
Model:	K-251				
Date:	4/13/2023		Temp. Units	F	(F or C)
Run:	2		Weight Units	lb	(kg or lb)
Control #:	2464				
Test Duration:	377				
Output Category:	II		Fuel Data		
				D. Fir	
Wood Moisture (% wet):	17.95		HHV	19,810	kJ/kg
Load Weight (lb wet):	17.50		%C	48.73	
Burn Rate (dry kg/h):	1.04		%H	6.87	
Total Particulate Emissions:	16.55	g	%O	43.9	
			%Ash	0.5	

Default Fuel Values

	D. Fir	Oak
HHV (kJ/kg)	19,810	19,887
%C	48.73	50
%H	6.87	6.6
%O	43.9	42.9
%Ash	0.5	0.5

Note 1: For other fuels, use the heating value and fuel composition determined by analysis of fuel sample in accordance with Clause 9.2.

Note 2: In cases where the "Fuel Weight Remaining" is the same for three or more readings in a row, a "divide by zero error" will occur in the calculation sheet. In such cases, adjust the weight values by interpolation between the first occurence and the next reading showing a decrease in weight.

	Averages	0.18	7.61	#DIV/0!	265.30	61.62
					Temp. (ºF)	
Elapsed Time (min)	Fuel Weight Remaining (lb)	Flue Gas Composition (%) CO	CO_2	O_2	Flue Gas	Room Temp
0	17.50	0.39	1.68		346.0	60.0
1	17.40	0.30	1.64		348.0	60.0
2	17.30	0.63	3.03		289.0	60.0
3	17.30	0.06	3.09		264.0	60.0
4	17.20	0.04	2.54		254.0	60.0
5	17.20	0.04	2.44		247.0	60.0
6	17.10	0.03	2.37		243.0	60.0
7	17.10	0.03	2.37		241.0	60.0
8	17.10	0.03	2.46		239.0	60.0
9	17.00	0.04	2.62		238.0	60.0
10	17.00	0.04	3.09		238.0	60.0
11	17.00	0.04	3.19		238.0	60.0
12	16.90	0.05	3.46		238.0	60.0
13	16.90	0.06	3.79		240.0	60.0
14	16.80	0.06	4.07		243.0	60.0
15	16.80	0.07	4.32		247.0	60.0
16	16.70	0.07	4.73		250.0	60.0
17	16.70	0.06	5.98		255.0	60.0
18	16.60	0.05	6.34		259.0	60.0

19	16.50	0.05	5.30		261.0	60.0
20	16.50	0.05	4.78		262.0	60.0
21	16.40	0.04	4.55		262.0	60.0
22	16.40	0.05	4.56		261.0	60.0
23	16.30	0.05	4.51		261.0	60.0
24	16.30	0.05	4.61		261.0	60.0
25	16.20	0.05	4.79		262.0	60.0
26	16.10	0.06	4.85		262.0	60.0
27	16.10	0.06	4.79		262.0	59.0
28	15.90	0.06	4.88		264.0	60.0
29	16.00	0.07	4.90		264.0	60.0
30	15.90	0.08	5.33		265.0	60.0
31	15.80	0.06	7.19		269.0	60.0
32	15.70	0.06	7.30		272.0	60.0
33	15.70	0.07	7.56		277.0	60.0
34	15.60	0.07	7.42		280.0	60.0
35	15.50	0.07	6.88		281.0	60.0
36	15.40	0.08	6.24		280.0	60.0
37	15.30	0.08	6.09		278.0	60.0
38	15.30	0.06	6.32		278.0	60.0
39	15.20	0.08	6.10		276.0	60.0
40	15.10	0.08	6.68		276.0	60.0
41	15.10	0.08	6.31		275.0	60.0
42	15.00	0.09	6.42		276.0	60.0
43	14.90	0.09	6.55		278.0	60.0
44	14.90	0.09	6.73		279.0	60.0
45	14.80	0.08	6.89		281.0	60.0
46	14.70	0.08	7.05		282.0	60.0
47	14.60	0.08	7.23		282.0	60.0
48	14.50	0.08	7.96		282.0	60.0
49	14.50	0.08	8.19		283	60
50	14.40	0.09	7.9		284	60
51	14.30	0.08	8.12		286	60
52	14.20	0.08	8.14		287	60
53	14.10	0.08	7.81		288	60
54	14.00	0.1	8.6		291	60
55	13.90	0.62	9.87		295	60
56	13.80	0.56	9.94		299	60
57	13.70	0.16	9.75		301	60

58	13.60	0.08	9.46		303	60
59	13.60	0.06	9.37		304	60
60	13.50	0.05	9.07		303	60
61	13.40	0.06	8.72		302	60
62	13.30	0.06	8.12		300	60
63	13.20	0.07	7.81		298	60
64	13.20	0.08	7.66		297	60
65	13.10	0.08	7.65		296	60
66	13.00	0.1	7.48		296	60
67	12.90	0.09	8		296	60
68	12.80	0.11	9.09		298	60
69	12.80	0.1	9.4		300	60
70	12.70	0.09	9.21		302	60
71	12.60	0.09	9.38		303	60
72	12.50	0.1	9.53		305	60
73	12.40	0.1	9.7		307	60
74	12.30	0.09	9.37		309	60
75	12.20	0.1	9.22		309	60
76	12.20	0.11	9.19		310	60
77	12.10	0.12	9.16		311	60
78	12.00	0.12	9.18		313	60
79	11.90	0.12	9.29		314	60
80	11.80	0.12	9.25		315	60
81	11.70	0.12	9.18		315	60
82	11.60	0.12	9.29		316	60
83	11.60	0.12	9.32		317	60
84	11.50	0.12	9.47		316	60
85	11.40	0.11	9.54		316	61
86	11.30	0.12	9.7		319	60
87	11.20	0.13	9.86		320	60
88	11.10	0.12	9.99		322	61
89	11.00	0.12	10.18		322	60
90	10.90	0.13	10.42		323	60
91	10.80	0.13	10.61		323	60
92	10.70	0.13	10.79		324	61
93	10.60	0.11	10.77		328	60
94	10.50	0.11	10.92		329	60
95	10.40	0.13	11.28		329	60
96	10.30	0.27	11.33		329	60

97	10.20	0.3	11.35		332	61
98	10.10	0.31	11.39		335	61
99	10.00	0.31	11.47		338	61
100	9.90	0.32	11.49		341	61
101	9.80	0.44	11.75		345	60
102	9.70	0.33	11.44		345	60
103	9.60	0.38	11.57		345	60
104	9.50	0.42	11.7		346	61
105	9.50	0.41	11.82		348	61
106	9.30	0.43	12.07		350	60
107	9.20	0.46	12.04		351	61
108	9.10	0.48	12.07		352	61
109	9.10	0.48	11.99		354	61
110	8.90	0.47	11.9		355	61
111	8.90	0.46	11.88		355	61
112	8.80	0.28	11.64		361	61
113	8.70	0.35	11.43		360	62
114	8.50	0.23	11.75		363	62
115	8.50	0.31	11.87		355	61
116	8.40	0.37	11.93		353	61
117	8.30	0.4	12.01		354	61
118	8.20	0.43	12.05		355	61
119	8.10	0.44	12.12		356	62
120	8.00	0.47	12.17		356	61
121	7.90	0.49	12.25		357	61
122	7.80	0.54	12.39		359	61
123	7.70	0.66	12.45		360	61
124	7.60	0.91	12.48		361	61
125	7.50	1.14	12.5		362	61
126	7.30	0.45	12.6		366	61
127	7.20	0.31	12.07		364	61
128	7.10	0.27	11.99		361	61
129	7.00	0.17	11.8		356	60
130	6.90	0.11	11.5		353	61
131	6.90	0.1	11.2		348	61
132	6.80	0.1	10.97		345	62
133	6.70	0.1	10.87		341	61
134	6.60	0.1	10.86		337	61
135	6.50	0.08	10.62		334	61

136	6.40	0.09	10.49		331	62
137	6.40	0.08	10.29		328	61
138	6.30	0.07	9.97		325	61
139	6.20	0.08	9.77		322	61
140	6.20	0.07	9.55		319	61
141	6.10	0.07	9.34		316	61
142	6.00	0.07	9.2		314	61
143	6.00	0.06	9.03		312	61
144	5.90	0.06	8.81		308	61
145	5.80	0.21	9.33		307	61
146	5.80	0.26	9.6		309	61
147	5.70	0.26	9.48		311	61
148	5.60	0.27	9.48		314	61
149	5.60	0.28	9.54		315	60
150	5.50	0.28	9.48		316	61
151	5.50	0.28	9.29		315	60
152	5.40	0.28	9.2		315	61
153	5.40	0.28	9.04		315	61
154	5.30	0.28	9.09		313	61
155	5.20	0.28	9.11		313	61
156	5.20	0.28	9.09		312	61
157	5.10	0.28	9.05		311	61
158	5.10	0.28	9.07		310	61
159	5.00	0.28	9.12		310	62
160	5.00	0.29	9.17		309	62
161	4.90	0.29	9.21		309	62
162	4.90	0.29	9.37		309	62
163	4.80	0.29	9.34		309	62
164	4.80	0.3	9.51		308	61
165	4.70	0.3	9.61		308	61
166	4.70	0.3	9.65		309	61
167	4.60	0.3	9.64		308	61
168	4.60	0.3	9.49		308	62
169	4.50	0.3	9.47		308	62
170	4.40	0.3	9.44		308	62
171	4.40	0.29	9.36		307	62
172	4.30	0.29	9.29		307	62
173	4.30	0.3	9.37		306	62
174	4.20	0.3	9.32		305	62

175	4.20	0.3	9.25		304	62
176	4.20	0.3	9.27		303	61
177	4.10	0.3	9.2		303	62
178	4.10	0.29	9.09		302	62
179	4.00	0.29	9.16		302	62
180	4.00	0.3	9.13		301	62
181	3.90	0.29	9.01		299	62
182	3.90	0.29	9.08		299	62
183	3.80	0.29	8.96		297	62
184	3.80	0.28	8.88		297	62
185	3.70	0.28	8.77		295	62
186	3.70	0.28	8.81		295	62
187	3.70	0.28	8.8		295	62
188	3.60	0.28	8.86		294	62
189	3.60	0.28	8.8		293	62
190	3.50	0.26	8.38		293	62
191	3.50	0.26	8.3		291	62
192	3.50	0.25	8.17		290	62
193	3.40	0.24	8.03		288	62
194	3.40	0.24	7.86		287	62
195	3.40	0.23	7.72		285	62
196	3.30	0.23	7.69		282	62
197	3.30	0.23	7.68		280	62
198	3.30	0.23	7.7		278	62
199	3.20	0.23	7.7		277	62
200	3.20	0.23	7.68		275	62
201	3.20	0.22	7.64		274	62
202	3.20	0.23	7.65		272	62
203	3.10	0.23	7.69		271	62
204	3.10	0.22	7.57		270	62
205	3.10	0.22	7.57		269	62
206	3.00	0.22	7.51		267	62
207	3.00	0.22	7.52		266	62
208	3.00	0.22	7.57		266	62
209	3.00	0.22	7.54		264	62
210	2.90	0.22	7.55		264	62
211	2.90	0.22	7.55		263	62
212	2.90	0.22	7.51		263	62
213	2.90	0.22	7.59		262	62

214	2.80	0.22	7.54		262	62
215	2.80	0.22	7.61		260	62
216	2.80	0.22	7.66		261	62
217	2.70	0.22	7.66		260	62
218	2.70	0.22	7.71		260	62
219	2.70	0.23	7.68		260	62
220	2.70	0.22	7.7		260	62
221	2.60	0.23	7.76		260	62
222	2.60	0.23	7.79		260	62
223	2.60	0.23	7.77		259	62
224	2.50	0.23	7.86		260	62
225	2.50	0.23	7.92		260	62
226	2.50	0.23	7.94		261	62
227	2.40	0.23	7.97		261	62
228	2.40	0.23	8.03		261	62
229	2.40	0.23	8.09		262	62
230	2.30	0.23	7.96		262	63
231	2.30	0.23	7.97		262	62
232	2.30	0.23	7.85		263	62
233	2.30	0.23	7.74		262	62
234	2.20	0.23	7.59		261	61
235	2.20	0.22	7.5		261	62
236	2.20	0.22	7.36		260	62
237	2.20	0.22	7.32		259	62
238	2.10	0.22	7.18		257	62
239	2.10	0.21	7.1		256	62
240	2.10	0.21	7.07		255	62
241	2.10	0.21	7.03		253	62
242	2.00	0.21	6.96		252	62
243	2.00	0.21	6.99		251	62
244	2.00	0.21	6.89		249	62
245	2.00	0.2	6.87		249	62
246	2.00	0.2	6.83		247	62
247	1.90	0.2	6.81		246	62
248	1.90	0.13	6.78		244	62
249	1.90	0.13	6.79		243	62
250	1.90	0.12	6.81		240	62
251	1.90	0.12	6.71		238	62
252	1.90	0.12	6.65		236	62

253	1.80	0.12	6.75		235	62
254	1.80	0.12	6.69		233	63
255	1.80	0.12	6.62		231	63
256	1.80	0.12	6.59		230	62
257	1.80	0.12	6.74		228	62
258	1.80	0.12	6.69		227	62
259	1.70	0.12	6.61		226	62
260	1.70	0.12	6.55		225	62
261	1.70	0.11	6.55		224	62
262	1.70	0.12	6.53		223	62
263	1.70	0.12	6.53		222	62
264	1.70	0.12	6.45		221	62
265	1.60	0.12	6.45		220	62
266	1.60	0.12	6.48		219	62
267	1.60	0.12	6.48		219	63
268	1.60	0.12	6.42		218	62
269	1.60	0.11	6.38		217	62
270	1.60	0.11	6.32		217	63
271	1.50	0.11	6.33		216	63
272	1.50	0.11	6.29		215	63
273	1.50	0.11	6.29		215	62
274	1.50	0.11	6.31		215	62
275	1.50	0.11	6.31		214	62
276	1.50	0.11	6.32		213	62
277	1.40	0.11	6.27		213	62
278	1.40	0.1	6.29		212	63
279	1.40	0.1	6.24		211	62
280	1.40	0.1	6.22		211	63
281	1.40	0.1	6.16		210	63
282	1.40	0.1	6.15		210	63
283	1.40	0.1	6.19		209	63
284	1.30	0.1	6.17		209	63
285	1.30	0.1	6.18		208	63
286	1.30	0.1	6.18		208	63
287	1.30	0.1	6.17		208	63
288	1.30	0.1	6.24		208	63
289	1.30	0.1	6.19		208	63
290	1.30	0.09	6.1		207	63
291	1.20	0.09	6.13		206	63

292	1.20	0.09	6.13		206	63
293	1.20	0.09	6.14		205	63
294	1.20	0.09	6.18		206	63
295	1.20	0.09	6.23		205	63
296	1.20	0.1	5.7		205	63
297	1.20	0.1	5.63		205	63
298	1.10	0.11	5.66		204	63
299	1.10	0.12	5.76		204	63
300	1.10	0.12	5.75		205	63
301	1.10	0.12	5.75		204	63
302	1.10	0.13	5.75		204	63
303	1.10	0.13	5.74		204	63
304	1.10	0.13	5.74		204	63
305	1.00	0.13	5.71		205	63
306	1.00	0.13	5.68		205	64
307	1.00	0.13	5.68		205	63
308	1.00	0.14	5.64		205	63
309	1.00	0.14	5.66		205	63
310	1.00	0.14	5.7		204	63
311	1.00	0.14	5.75		204	63
312	0.90	0.13	5.76		204	63
313	0.90	0.13	5.89		204	63
314	0.90	0.13	5.83		204	63
315	0.90	0.13	5.9		204	63
316	0.90	0.12	5.85		204	63
317	0.90	0.12	5.83		204	62
318	0.90	0.11	5.8		203	63
319	0.80	0.11	5.76		203	62
320	0.80	0.11	5.76		202	63
321	0.80	0.11	5.72		202	63
322	0.80	0.11	5.68		201	63
323	0.80	0.11	5.66		200	62
324	0.80	0.1	5.58		200	63
325	0.80	0.1	5.63		200	63
326	0.80	0.1	5.6		199	63
327	0.70	0.1	5.6		199	63
328	0.70	0.1	5.58		198	63
329	0.70	0.1	5.6		198	63
330	0.70	0.1	5.59		197	63

331	0.70	0.1	5.59		197	63
332	0.70	0.1	5.63		196	63
333	0.70	0.1	5.61		196	63
334	0.60	0.1	5.64		196	63
335	0.60	0.1	5.72		195	63
336	0.60	0.1	5.84		195	63
337	0.60	0.1	5.89		195	63
338	0.60	0.1	5.91		195	63
339	0.60	0.1	5.91		195	63
340	0.60	0.1	5.89		195	63
341	0.60	0.1	5.97		194	63
342	0.50	0.09	5.95		194	64
343	0.50	0.09	6.04		194	63
344	0.50	0.09	6.03		194	63
345	0.50	0.09	6.03		193	63
346	0.50	0.09	6.01		193	64
347	0.50	0.09	6.04		192	63
348	0.50	0.09	6.08		193	64
349	0.40	0.1	6.04		192	63
350	0.40	0.09	6.06		192	64
351	0.40	0.09	6.01		192	63
352	0.40	0.09	6		192	63
353	0.40	0.09	5.94		191	63
354	0.40	0.1	5.96		192	63
355	0.30	0.1	5.95		191	63
356	0.30	0.1	5.96		192	63
357	0.30	0.1	5.96		192	63
358	0.30	0.1	5.92		191	63
359	0.30	0.11	5.87		192	64
360	0.30	0.13	5.96		193	63
361	0.30	0.13	5.96		193	63
362	0.30	0.13	6.04		193	63
363	0.20	0.13	6.04		194	63
364	0.20	0.14	6.11		194	63
365	0.20	0.14	6.12		195	64
366	0.20	0.14	6.1		196	64
367	0.20	0.14	6.03		196	64
368	0.20	0.14	6.07		197	63
369	0.10	0.14	6.09		197	63

370	0.10	0.15	6.02		198	63
371	0.10	0.15	6.06		198	63
372	0.10	0.15	6.02		198	64
373	0.10	0.15	6.01		199	64
374	0.10	0.15	6.01		199	64
375	0.10	0.15	5.91		199	64
376	0.10	0.15	5.94		199	63
377	0.00	0.15	5.95		199	64

OMNI-Test Laboratories, Inc.

Manufacturer:	Kuma Stoves
Model:	K-251
Date:	04/13/23
Run:	2
Control #:	2464
Test Duration:	377
Output Category:	II

Technicians: _____

_____

_____

Test Results in Accordance with CSA B415.1-10

	HHV Basis	LHV Basis
Overall Efficiency	77.3%	83.6%
Combustion Efficiency	98.5%	98.5%
Heat Transfer Efficiency	78%	84.8%

Output Rate (kJ/h)	15,883	15,067	**(Btu/h)**
Burn Rate (kg/h)	1.04	2.29	**(lb/h)**
Input (kJ/h)	20,540	19,484	**(Btu/h)**

Test Load Weight (dry kg)	6.51	14.36	**dry lb**
MC wet (%)	17.95		
MC dry (%)	21.88		
Particulate (g)	16.55		
CO (g)	174		
Test Duration (h)	6.28		

Emissions	**Particulate**	**CO**
g/MJ Output	0.17	1.74
g/kg Dry Fuel	2.54	26.73
g/h	2.63	27.71
lb/MM Btu Output	0.39	4.06

Air/Fuel Ratio (A/F)	14.06

VERSION: **2.4** **4/15/2010**

OMNI-Test Laboratories, Inc.

ASTM E2780 Wood Heater Run Sheets

Client: Kuma Project Number: 0123WM014E Run Number: 2
Model: K-251 Tracking Number: 2464 Date: 04/13/2023
Test Crew: Tony Tang
OMNI Equipment ID numbers: 00637, 00709, 00283A

ASTM E2515 Lab Sheet

Assembled By: Tony Tang

Date/Time in Dessicator: 04/13/23, 7:30

Weighing #1	Weighing #2	Weighing #3	Weighing #4	Weighing #5
Date/Time: 04/18/23 16:00	Date/Time: 04/20/23 7:40	Date/Time: 04/24/23 7:30	Date/Time:	Date/Time:
R/H %: 17.3	R/H %: 7.9	R/H %: 8.5	R/H %:	R/H %:
Temp: 67.4	Temp: 66.0	Temp: 66.3	Temp:	Temp:
200 mg Audit: 200.1	200 mg Audit: 200.1	200 mg Audit: 200.0	200 mg Audit:	200 mg Audit:
2 g Audit: 2000.3	2 g Audit: 2000.3	2 g Audit: 2000.1	2 g Audit:	2 g Audit:
100 g Audit: 99997.8	100 g Audit 99997.9	100 g Audit 99997.9	100 g Audit	100 g Audit
Initials: TT	Initials: TT	Initials: TT	Initials:	Initials:

Train	Element	ID #	Tare (mg)	Weight (mg)	Weight (mg)	Weight (mg)	Weight (mg)	Weight (mg)
A (First Hour)	Front Filter	E868	118.4	121.2	121.1			
	Rear Filter	E869	119.2	119.4	119.3			
	Probe	29	114275.8	114276.2	114275.8	114276.0		
	O-Ring Set	S472	3341.6	3341.8	3341.8			
A (Remainder)	Front Filter	E870	117.8	126.5	126.5			
	Rear Filter	E871	119.2	118.8	118.7			
	Probe	65	117079.9	117080.1	117079.8	117080.0		
	O-Ring Set	S473	4112.6	4113.9	4113.9			
B	Front Filter	E872	117.8	128.7	128.7			
	Rear Filter	E873	118.7	119.4	119.6			
	Probe	84	117635.0	117635.7	117635.4	117635.6		
	O-Ring Set	S474	3308.3	3308.6	3308.6			
BG	Filter	E874	118.0	118.1	118.1			

Technician Signature: Tony Tang Date: 04/24/23

OMNI-Test Laboratories, Inc.

ASTM E2780 Wood Heater Run Sheets

Client: Kuma Project Number: 0123WM014E Run Number: 2
Model: K-251 Tracking Number: 2464 Date: 04/13/2023
Test Crew: Tony Tong, Riley Tiegs
OMNI Equipment ID numbers: 00335, 00336, 00594, 00185, 00322

Wood Heater Run Notes

Air Control Settings

Primary:

Fully closed

Secondary: Fixed

Tertiary/Pilot: N/A

Fan: ~~Fan off for first 30 min, then on low~~

Preburn Notes

Time	Notes
9:51	Preburn ~~started~~ recording @ 7.58 lbs with low burn setting
10:51	Preburn stopped at 60 min

Test Notes

Sketch test fuel configuration:

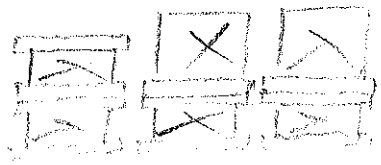

Start up procedures & Timeline:

Bypass: Used to load fuel
Fuel loaded by: 55
Door closed at: 70
Primary air: fully closed

Notes: ~~Fan off for first 30 min then set to low~~

Time	Notes
10:52	Test started
11:52	First hour filters change
1708	test done

Technician Signature: Tony Tong Date: 04/13/2023

OMNI-Test Laboratories, Inc.

ASTM E2780 Wood Heater Run Sheets

Client: Kuma Project Number: 0123WM014E Run Number: 2
Model: K-251 Tracking Number: 2464 Date: 04/13/2023
Test Crew: Terry Young, Riley Tiegs
OMNI Equipment ID numbers: 00596, 00410, 00716, 00721, 00255

Wood Heater Supplemental Data

Start Time: 10:52 Booth #: E1

Stop Time:

Stack Gas Leak Check:

Initial: good Final: good

Sample Train Leak Check:

A: 0.001 @ 4.0 "Hg
B: 0.000 @ 4.0 "Hg
1st hour 0.000 at 4.0

Calibrations: Span Gas CO_2: 16.94 % CO: 4.32 % CO 500 ppm

	Pre Test		Post Test	
	Zero	Span	Zero	Span
Time	10:06	10:08	1712	1710
CO_2	0.00	16.94	0.00	16.82
CO	0.00	4.34	-0.01	4.29
CO ppm	0.0	493		

Air Velocity (ft/min): Initial: <50 Final: <50
Scale Audit (lbs): Initial: 10 Final: 10
Pitot Tube Leak Test: Initial: good Final: good
Stack Diameter (in): 6
Induced Draft: 0.000
% Smoke Capture: 100
Flue Pipe Cleaned Prior to First Test in Series:
Date: 04/04/23 Initials: TT

	Initial	Middle	Ending
P_b (in/Hg)	30.07	30.02	29.96
RH (%)	45	41	38
Ambient (°F)	60	62	63

Background Filter Volume: 69.841

Tunnel Traverse		
Microtector Reading	dP (in H_2O)	T(°F)
1	0.068	76
2	0.090	76
3	0.090	76
4	0.062	76
5	0.080	76
6	0.088	76
7	0.090	76
8	0.072	76
Center:		
	0.099	76

Tunnel Static Pressure (in H_2O):	
Beginning of Test	End of Test
-0.32	-0.31

Technician Signature: Terry Young Date: 04/13/2023

ASTM E2780 Wood Heater Run Sheets

Client: Kuma Project Number: 0123WM014E Run Number: 2
Model: K-251 Tracking Number: 2464 Date: 04/13/2023
Test Crew: Tony Tong
OMNI Equipment ID numbers: 00340, 00431, T61, 00353

Wood Heater Fuel Data

Fuel: Douglas fir, untreated and air dried, standard grade or better dimensional lumber

Pre-Burn Fuel

Calibration: Cal Value (1) = 12% Actual Reading 12%
Cal Value (2) = 22% Actual Reading 22%

Piece:	Length:	Reading:	Piece:	Length:	Reading:
1	12 in	23.2	7	16 in	23.0
2	12 in	21.7	8	in	
3	12 in	20.4	9	in	
4	12 in	21.5	10	in	
5	16 in	23.3	11	in	
6	16 in	23.0	12	in	

Total Pre-Burn Fuel Weight: 9.9 lbs Pre-Burn Fuel Average Moisture:

Time (clock): 8:20 Room Temperature (F): 60 Initials: TT

Test Fuel

Firebox Volume (ft³): 2.56 Test Fuel Piece Length (in): 17.25"
Load Weight Range (lb): (16.13, 19.44) Total Wet Fuel Load Weight (lb): 17.5 (3.50, 4.38)

Fuel Type & Amount: 2 x 4: 4 4 x 4: 2
Weight (with spacers): 8.8 lbs Weight (with spacers): 8.7 lbs

Piece:	Weight (lbs):	Moisture Readings (%DB):			Fuel Type:
1	1.6	22.8	20.8	20.0	2x4
2	1.8	23.8	23.1	23.3	2x4
3	1.9	23.8	23.2	23.0	2x4
4	1.9	23.2	22.7	22.6	2x4
5	4.3	22.3	23.8	24.6	4x4
6	4.1	23.4	22.7	21.9	4x4
7					

Spacer Moisture Readings (%DB)

13.4	11.4	16.1	10.4	11.1	21.6	11.1	10.9
17.1	14.8	10.7	11.8	11.0	11.6	17.0	15.1
11.0	16.9	17.8	18.3				

Time (clock): 8:20 Room Temperature (F): 60 Initials: TT

Technician Signature: Tony Tong Date: 04/13/2023

Run 3

Medium Low Burn (Category II)

Wood Heater Preburn Data - ASTM E2780

Run:	3

Technician Signatu

Manufacturer:	Kuma Stoves
Model:	K-251
Tracking No.:	2464
Project No.:	0123WM014E
Test Date:	4/17/23
Beginning Clock Time:	10:48

Preburn Fuel Data

4 pieces @ 12 inches
3 pieces @ 16 inches
pieces @ inches

Fuel Moisture Readings (% DB):

24.7	24.9	21.1	23.2	22.7	22.5	22.7

Avg Preburn Moisture (% DB): **23.11**

Coal Bed Range (lb):	3.5 (min)	4.3 (max)

			Temperatures (°F)								
Elapsed Time (min)	Scale (lb)	Stack Draft (in H_2O)	FB Top	FB Bottom	FB Back	FB Left	FB Right	Cat Exit	Avg. FB	Stack	Ambient
0	7.4	-0.062	658	336	394	467	451	3218	461.2	458	62
1	7.3	-0.06	662	338	397	468	452	3218	463.2	415	61
2	7.2	-0.058	660	340	398	469	453	3218	464	387	62
3	7.2	-0.056	643	341	367	469	452	3218	454.3	368	62
4	7.1	-0.055	635	342	383	469	452	3218	456.1	354	62
5	7	-0.054	625	343	381	468	452	3218	454	343	62
6	6.9	-0.053	615	344	380	468	452	3218	451.8	334	62
7	6.8	-0.052	605	344	376	467	452	3218	448.8	326	62
8	6.8	-0.051	595	345	375	466	451	3218	446.4	319	63
9	6.7	-0.05	586	345	372	464	450	3218	443.5	315	62
10	6.6	-0.049	577	345	366	463	450	3218	440.2	309	62
11	6.6	-0.05	579	345	364	461	448	3218	439.5	308	62
12	6.5	-0.05	588	346	362	459	447	3218	440.4	310	61
13	6.4	-0.048	599	346	359	457	445	3218	441	314	61
14	6.4	-0.051	606	346	358	454	443	3218	441.4	315	61
15	6.3	-0.05	612	345	352	452	441	3218	440.5	319	62
16	6.2	-0.051	621	345	352	450	439	3218	441.4	319	61
17	6.1	-0.051	636	345	349	447	437	3218	442.9	320	62
18	6	-0.052	650	345	349	445	435	3218	444.9	322	62
19	5.9	-0.052	665	344	347	443	433	3218	446.4	324	62
20	5.8	-0.052	676	344	337	440	431	3218	445.9	326	62
21	5.7	-0.051	686	344	336	439	429	3218	446.5	327	62
22	5.7	-0.052	693	344	330	437	427	3218	446.1	327	62
23	5.6	-0.051	699	343	327	435	424	3218	445.7	328	62
24	5.5	-0.051	704	343	326	433	422	3218	445.6	327	61
25	5.4	-0.052	709	342	324	431	420	3218	445.4	328	61
26	5.5	-0.051	714	342	322	430	419	3218	445.2	328	62
27	5.2	-0.052	730	342	350	428	417	3218	453.2	329	62
28	5.1	-0.051	740	341	352	427	416	3218	455.2	330	62
29	5.1	-0.051	748	341	353	425	415	3218	456.4	331	62
30	5	-0.051	756	340	354	424	413	3218	457.6	332	62
31	4.9	-0.051	763	340	356	423	412	3218	458.7	333	61
32	4.8	-0.052	769	339	357	422	411	3218	459.6	335	61
33	4.7	-0.052	774	339	358	421	410	3218	460.4	337	62
34	4.7	-0.052	779	339	359	421	409	3218	461.2	336	62
35	4.6	-0.052	783	338	359	420	408	3218	461.8	337	61
36	4.5	-0.052	787	338	360	420	408	3218	462.4	337	61
37	4.4	-0.051	789	337	361	419	407	3218	462.7	337	62
38	4.3	-0.052	791	337	362	419	406	3218	462.9	336	61
39	4.3	-0.051	790	336	362	419	406	3218	462.8	336	62
40	4.2	-0.051	788	336	363	419	406	3218	462.4	334	61
41	4.2	-0.05	785	336	364	419	405	3218	461.8	332	61
42	4.1	-0.051	781	335	364	419	405	3218	460.9	331	61

Wood Heater Preburn Data - ASTM E2780

Run: 3

Technician Signatu

Manufacturer: Kuma Stoves
Model: K-251
Tracking No.: 2464
Project No.: 0123WM014E
Test Date: 4/17/23
Beginning Clock Time: 10:48

Preburn Fuel Data

4 pieces @ 12 inches
3 pieces @ 16 inches
pieces @ inches

Fuel Moisture Readings (% DB):

24.7	24.9	21.1	23.2	22.7	22.5	22.7

Avg Preburn Moisture (% DB): **23.11**

Coal Bed Range (lb):	**3.5** (min)	**4.3** (max)

			Temperatures (°F)								
Elapsed Time (min)	Scale (lb)	Stack Draft (in H_2O)	FB Top	FB Bottom	FB Back	FB Left	FB Right	Cat Exit	Avg. FB	Stack	Ambient
43	4	-0.05	776	335	365	420	405	3218	460.1	330	61
44	4	-0.049	771	335	366	420	405	3218	459	329	62
45	3.9	-0.05	763	334	366	420	405	3218	457.8	327	61
46	3.9	-0.049	754	334	367	420	404	3218	455.8	325	61
47	3.9	-0.049	743	334	367	421	404	3218	453.8	323	62
48	3.8	-0.048	731	333	368	421	404	3218	451.5	320	62
49	3.8	-0.047	718	333	368	421	405	3218	449.1	316	61
50	3.7	-0.047	706	333	369	421	404	3218	446.7	313	62
51	3.7	-0.047	694	333	369	422	404	3218	444.3	309	62
52	3.7	-0.046	681	332	370	422	405	3218	441.9	306	61
53	3.6	-0.046	670	332	370	422	405	3218	439.6	302	62
54	3.6	-0.046	657	332	370	422	405	3218	437.2	299	62
55	3.6	-0.045	644	332	370	422	404	3218	434.5	296	61
56	3.6	-0.044	632	332	370	422	404	3218	432	292	61
57	3.5	-0.044	621	332	370	422	404	3218	429.9	288	61
58	3.5	-0.043	610	332	370	422	404	3218	427.6	285	61
59	3.5	-0.043	599	332	371	422	404	3218	425.4	282	61
60	3.5	-0.042	587	332	371	421	404	3218	423	278	61

Wood Heater Test Fuel Data - ASTM E2780

Manufacturer :	Kuma Stoves
Model :	K-251
Tracking No. :	2464
Project No. :	0123WM014E
Test Date :	4/17/2023
Run No. :	3

Moisture Meter Cal	
Cal Block	Measured
12.0	12.0
22.0	22.0

Firebox Volume :	2.56	ft3
% 2 x 4 Required :	35 - 65	%
Ideal Fuel Weight :	17.92	lb.
Minimum Fuel Weight :	16.13	lb.
Maximum Fuel Weight :	19.71	lb.

Fuel Piece Data

PC #	Weight, lb	Size	Length, In	Moisture Readings, Dry Basis %			Average MC, % db	Dry Weight, lb.	Volume, ft3	Wet Weights, lb 4 x 4	Wet Weights, lb 2 x 4	Dry Weights, lb 4 x 4	Dry Weights, lb 2 x 4
1	1.60	2x4	17.25	19.0	19.1	21.0	19.7	1.34	0.0524		1.6		1.34
2	1.50	2x4	17.25	19.2	19.0	19.1	19.1	1.26	0.0524		1.5		1.26
3	1.70	2x4	17.25	21.7	21.5	19.1	20.8	1.41	0.0524		1.7		1.41
4	1.60	2x4	17.25	19.7	19.3	19.0	19.3	1.34	0.0524		1.6		1.34
5	4.20	4x4	17.25	23.8	22.5	23.8	23.4	3.40	0.1223	4.2		3.40	
6	4.70	4x4	17.25	22.0	23.8	20.4	22.1	3.85	0.1223	4.7		3.85	
7													
8													
9													

Spacer Data

Moisture Readings, Dry Basis % (One reading per spacer)								
17.2	20.1	16.4	16.2	13.9	15.5	16.2	14.2	
15.9	16.1	12.0	16.1	16.2	16.4	13.6	13.2	
12.8	18.4	16.6	14.2					

Avg : 15.6

Assembled Crib Fuel Load with Spacers Attatched

PC #	Weight, lb with Spacers	Size	4 x 4s	2 x 4s
1	2.00	2x4		2.0000
2	1.90	2x4		1.9000
3	2.10	2x4		2.1000
4	1.90	2x4		1.9000
5	4.60	4x4	4.60	
6	4.80	4x4	4.80	
7				
8				
9				

Combined Mass of 4 x 4s	9.4	lb
Combined Mass of 2 x 4s	7.9	lb
Total Wet Mass of Fuel Load	**17.3**	lb

Fuel Load Properties

Type	*Number of Pieces*	*Wet Weight, lb.*	*Dry Weight, lb.*	*Fuel Loading Density, lb/ft³* Wet Basis	*Fuel Loading Density, lb/ft³* Dry Basis	Dry Fuel Density, lb/ft³	Wet Fuel Density, lb/ft³	*Moisture, %* Dry Basis	*Moisture, %* Wet Basis
2 x 4	4	6.4	5.34	6.76	5.60	27.74	33.68	20.72	17.17
4 x 4	2	8.9	7.25						
Spacers	20	2.0	1.73						
Totals		17.3	14.33						

Compliance Checks

	Fuel Load, Wet Lb.	Load Density, lb/ft³ of FB vol	Fuel Density, lb/ft³	% of Fuel load mass which is 2x4	Fuel Load Peices Mositure, % db
Measured	17.3	6.76	27.74	46	20.7
Required	16.1 - 19.7	6.3 - 7.7	25 - 36	35 - 65	19 -25
Complies ?	Yes	Yes	Yes	Yes	Yes

Wood Heater Test Data

u

Run: 3

Manufacturer: Kuma Stoves
Model: K-251
Tracking No.: 2464
Project No.: 0123WM014E
Test Date: 17-Apr-23
Beginning Clock Time: 11:49

Total Sampling Time: 368 min
Recording Interval: 1 min
Tunnel Diameter: 6
Background Sample Volume: 68.403 cubic feet

PM Control Modules: 335, 336
Dilution Tunnel MW(dry): 29.00 lb/lb-mole
Dilution Tunnel MW(wet): 28.78 lb/lb-mole
Dilution Tunnel H2O: 2.00 percent
Dilution Tunnel Static: -0.310 "H2O
Tunnel Area: 0.19635 ft2
Pitot Tube Cp: 0.99

Avg. Tunnel Velocity: 17.83 ft/sec.
Initial Tunnel Flow: 203.7 scfm
Average Tunnel Flow: 202.2 scfm
Post-Test Leak Check (1st Hr): 0.000 cfm @ 4 in. Hg
Post-Test Leak Check (1): 0.000 cfm @ 4 in. Hg
Post-Test Leak Check (2): 0.000 cfm @ 4 in. Hg
Average Test Piece Fuel Moisture: 20.72 Dry Basis %

Technician Signature:_____

Meter Box Y Factor: 1.004 (1) 1.002 (2) 1.012 (Amb)

Export to PDF

Barometric Pressure:

Begin	Middle	End	Average
29.76	29.75	29.72	29.74

Room Air Velocity, fpn
0

OMNI Equipment Numbers: _____

Velocity Traverse Data

	Pt.1	Pt.2	Pt.3	Pt.4	Pt.5	Pt.6	Pt.7	Pt.8	Center	
Initial dP	0.070	0.072	0.082	0.064	0.058	0.086	0.084	0.068	0.098	"H2O
Temp:	78	78	78	78	78	78	78	78	78	°F

V_{strav} 18.09 ft/sec V_{scent} 21.01 ft/sec F_p 0.861

qwq

	Particulate Sampling Data														Fuel Weight (lb)		Temperature Data (°F)													Stack Gas Data		
Elapsed Time (min)	Gas Meter 1 (ft^3)	Gas Meter 2 (ft^3)	Sample Rate 1 (cfm)	Sample Rate 2 (cfm)	Orifice dH 1 ("H_2O)	Meter 1 Temp (°F)	Meter 1 Vacuum ("Hg)	Orifice dH 2 ("H_2O)	Meter 2 Temp (°F)	Meter 2 Vacuum ("Hg)	Dilution Tunnel (°F)	Dilution Tunnel Center dP	Pro. Rate 1	Pro. Rate 2	Scale Reading	Weight Change	Firebox Top	Firebox Bottom	Firebox Back	Firebox Left	Firebox Right	Avg. Stove Surface (Tot = ΔT)	Catalyst Exit	Stack	Filter 1	Dryer Exit 1	Filter 2	Dryer Exit 2	Ambient	Draft ("H_2O)	CO_2 (%)	CO (%)
Tot / Avg	**59.00**	**58.97**	**0.16**	**0.16**	**1.27**	**73.20**	**3.02**	**1.00**	**73.29**	**2.28**	**73.95**	**0.10**	**100.02**	**100.03**		-17.3	489	323	347	388	395	**79**	793	258	64	51	64	51	62	-0.041	8	0
Minimum			0.14	0.16	0.25	66.00	0.07	0.60	67.00	1.80	69.00	0.08	89.34	96.76	0.00	-0.200	333	296	271	320	351	345	561	190	62	46	62	47	60	-0.065	3	0
Max			0.16	0.17	1.33	75.00	3.13	1.38	75.00	2.70	120.00	0.10	108.13	111.75	17.30	0.000	787	349	383	442	431	431	1310	422	65	52	64	53	63	-0.030	12	2.670
0	0.000	0.000			0.25	66	0.07	0.60	67	1.8	114	0.096			17.3		579	341	370	423	408	424	911	422	62	51	62	51	62	-0.065	2.94	0.21
1	0.156	0.168	0.16	0.17	1.33	66	2.74	1.38	67	2.7	120	0.097	102	110	17.2	-0.1	563	345	371	422	409	422	837	418	63	47	64	47	62	-0.058	2.76	0.15
2	0.308	0.334	0.15	0.17	0.99	66	2.28	0.99	67	2.2	91	0.087	102	112	17.1	-0.1	547	349	371	421	409	419	787	342	64	47	64	47	63	-0.048	4.56	0.35
3	0.448	0.491	0.14	0.16	0.98	66	2.27	0.99	67	2.2	85	0.096	89	100	17.0	-0.1	539	349	370	419	408	417	779	312	64	47	64	47	61	-0.046	4.25	0.08
4	0.588	0.648	0.14	0.16	0.98	66	2.27	0.99	67	2.2	82	0.089	93	104	17.0	0	532	349	369	417	407	415	787	299	64	47	64	47	62	-0.047	4.78	0.06
5	0.745	0.806	0.16	0.16	1.30	66	2.71	0.98	67	2.2	80	0.095	100	101	16.9	-0.1	526	348	366	414	405	412	795	292	64	46	64	47	62	-0.046	5.17	0.06
6	0.906	0.963	0.16	0.16	1.30	66	2.69	0.98	67	2.2	80	0.086	108	105	16.9	0	522	348	363	411	402	409	793	289	64	46	64	47	62	-0.047	5.04	0.06
7	1.068	1.120	0.16	0.16	1.29	66	2.7	0.98	67	2.2	79	0.096	103	100	16.8	-0.1	518	348	360	407	400	407	791	289	64	46	64	47	62	-0.047	5.42	0.05
8	1.228	1.276	0.16	0.16	1.29	66	2.69	1.00	67	2.2	79	0.095	102	99	16.8	0	515	347	357	403	398	404	789	286	64	46	64	47	62	-0.046	5.43	0.05
9	1.387	1.434	0.16	0.16	1.29	66	2.69	0.99	67	2.2	79	0.099	99	99	16.7	-0.1	512	347	354	400	395	402	786	286	64	46	64	47	62	-0.046	5.64	0.05
10	1.547	1.591	0.16	0.16	1.29	67	2.68	0.99	67	2.2	78	0.096	101	99	16.6	-0.1	509	347	350	396	393	399	786	286	64	46	64	47	62	-0.047	6.39	0.06
11	1.707	1.750	0.16	0.16	1.29	67	2.69	0.99	67	2.2	78	0.099	100	99	16.6	0	509	346	347	392	390	397	790	287	64	46	64	47	62	-0.047	6.06	0.06
12	1.868	1.907	0.16	0.16	1.28	67	2.67	0.99	67	2.2	78	0.096	102	99	16.5	-0.1	509	346	343	388	387	395	796	288	64	46	64	47	62	-0.047	6.43	0.06
13	2.027	2.064	0.16	0.16	1.27	67	2.67	0.99	67	2.2	78	0.098	100	98	16.4	-0.1	511	345	340	385	385	393	799	290	64	47	64	47	62	-0.047	6.42	0.07
14	2.187	2.223	0.16	0.16	1.27	67	2.67	1.00	67	2.2	78	0.100	99	99	16.3	-0.1	513	344	336	381	382	391	793	291	64	47	64	47	61	-0.048	6.39	0.07
15	2.346	2.381	0.16	0.16	1.28	67	2.68	1.01	68	2.2	79	0.096	101	100	16.3	0	516	344	333	377	379	390	809	293	64	47	64	47	62	-0.048	6.32	0.08
16	2.507	2.541	0.16	0.16	1.28	67	2.67	1.01	68	2.2	78	0.091	105	104	16.2	-0.1	518	343	330	374	377	388	825	295	64	47	64	47	62	-0.048	6.5	0.09
17	2.666	2.700	0.16	0.16	1.27	67	2.66	1.00	68	2.2	78	0.088	105	105	16.1	-0.1	519	342	327	370	374	386	843	298	64	47	64	47	61	-0.049	7.23	0.08
18	2.825	2.858	0.16	0.16	1.27	68	2.68	1.01	68	2.2	78	0.095	101	100	16.0	-0.1	520	341	324	367	372	385	840	299	65	47	64	47	62	-0.049	7.36	0.08
19	2.985	3.018	0.16	0.16	1.28	68	2.68	1.00	68	2.2	79	0.086	107	107	15.9	-0.1	523	340	322	364	370	384	855	303	65	47	64	47	61	-0.050	7.37	0.08
20	3.145	3.177	0.16	0.16	1.28	68	2.67	1.00	68	2.2	78	0.099	100	99	15.8	-0.1	527	339	319	362	367	383	866	305	65	47	64	47	61	-0.050	7.19	0.07
21	3.305	3.336	0.16	0.16	1.28	68	2.66	1.01	68	2.2	78	0.094	102	102	15.8	0	529	339	316	359	365	382	875	307	65	47	64	47	61	-0.050	7.13	0.06
22	3.464	3.495	0.16	0.16	1.28	68	2.66	1.00	68	2.2	78	0.094	101	102	15.7	-0.1	530	338	313	357	364	380	880	308	65	47	64	47	61	-0.050	6.95	0.07
23	3.623	3.654	0.16	0.16	1.28	68	2.67	1.01	69	2.2	78	0.099	99	99	15.6	-0.1	532	337	311	355	362	379	883	309	65	47	64	47	61	-0.051	7.12	0.06
24	3.783	3.813	0.16	0.16	1.27	68	2.66	1.01	69	2.2	79	0.098	100	99	15.5	-0.1	534	336	309	353	360	378	893	311	65	47	64	48	61	-0.051	7.08	0.06
25	3.943	3.973	0.16	0.16	1.27	69	2.67	1.00	69	2.2	79	0.086	107	107	15.4	-0.1	536	335	306	351	359	377	891	312	65	48	64	48	61	-0.051	6.83	0.07
26	4.102	4.131	0.16	0.16	1.27	69	2.66	1.01	69	2.2	79	0.094	101	101	15.3	-0.1	537	335	304	349	358	377	892	312	65	48	64	48	61	-0.051	6.78	0.07
27	4.261	4.291	0.16	0.16	1.27	69	2.67	1.00	69	2.2	79	0.090	104	104	15.2	-0.1	537	333	302	348	356	375	907	313	65	48	64	48	62	-0.050	6.96	0.07
28	4.421	4.450	0.16	0.16	1.28	69	2.66	1.00	69	2.2	78	0.089	105	104	15.2	0	537	333	300	346	355	374	908	314	65	48	64	48	62	-0.051	7.74	0.07
29	4.582	4.609	0.16	0.16	1.28	69	2.68	1.00	70	2.2	79	0.099	100	99	15.1	-0.1	537	332	299	345	354	373	908	315	65	48	64	48	61	-0.051	8.33	0.06
30	4.741	4.769	0.16	0.16	1.27	69	2.67	1.01	70	2.2	79	0.099	99	99	15.0	-0.1	541	331	297	343	353	373	919	316	65	48	64	48	61	-0.052	8.81	0.06
31	4.900	4.927	0.16	0.16	1.27	69	2.67	1.01	70	2.2	78	0.093	102	101	14.8	-0.2	538	330	297	343	352	372	939	318	65	48	64	48	61	-0.052	8.24	0.06
32	5.060	5.087	0.16	0.16	1.27	70	2.68	1.00	70	2.2	78	0.092	103	103	14.8	0	539	329	295	342	352	371	949	318	65	48	64	48	61	-0.051	8.07	0.06
33	5.221	5.247	0.16	0.16	1.27	70	2.67	1.00	70	2.2	77	0.088	106	105	14.7	-0.1	540	329	294	342	351	371	953	317	65	48	64	48	61	-0.052	7.98	0.06
34	5.380	5.405	0.16	0.16	1.27	70	2.67	1.00	70	2.2	77	0.093	102	101	14.6	-0.1	540	328	291	341	351	370	953	317	65	49	64	48	61	-0.051	8.24	0.05
35	5.540	5.565	0.16	0.16	1.28	70	2.67	1.00	70	2.2	77	0.100	99	99	14.5	-0.1	538	327	289	341	351	369	950	316	65	49	64	49	61	-0.051	8.88	0.05
36	5.699	5.725	0.16	0.16	1.28	70	2.68	1.01	70	2.2	77	0.098	99	100	14.4	-0.1	537	326	287	341	351	368	949	315	65	49	64	49	61	-0.051	9.01	0.05
37	5.859	5.883	0.16	0.16	1.27	70	2.68	1.00	71	2.2	77	0.097	100	99	14.3	-0.1	539	326	285	341	351	368	954	316	65	49	64	49	61	-0.053	9.26	0.06
38	6.020	6.043	0.16	0.16	1.27	70	2.69	1.00	71	2.2	78	0.098	100	100	14.2	-0.1	545	325	284	341	351	369	973	318	65	49	64	49	61	-0.052	9.39	0.07
39	6.180	6.203	0.16	0.16	1.27	70	2.69	1.00	71	2.2	77	0.096	101	100	14.1	-0.1	551	324	282	341	351	370	981	319	65	49	64	49	62	-0.051	9.26	0.07
40	6.340	6.362	0.16	0.16	1.27	71	2.68	1.01	71	2.2	78	0.085	107	106	14.0	-0.1	556	324	281	341	351	371	1000	320	65	49	64	49	61	-0.052	9.4	0.08

Wood Heater Test Data

u

Run: 3

Manufacturer: Kuma Stoves
Model: K-251
Tracking No.: 2464
Project No.: 0123WM014E
Test Date: 17-Apr-23
Beginning Clock Time: 11:49

Total Sampling Time: 368 min
Recording Interval: 1 min
Tunnel Diameter: 6
Background Sample Volume: 68.403 cubic feet

PM Control Modules: 335, 336
Dilution Tunnel MW(dry): 29.00 lb/lb-mole
Dilution Tunnel MW(wet): 28.78 lb/lb-mole
Dilution Tunnel H2O: 2.00 percent
Dilution Tunnel Static: -0.310 "H2O
Tunnel Area: 0.19635 ft2
Pitot Tube Cp: 0.99

Avg. Tunnel Velocity: 17.83 ft/sec.
Initial Tunnel Flow: 203.7 scfm
Average Tunnel Flow: 202.2 scfm
Post-Test Leak Check (1st Hr): 0.000 cfm @ 4 in. Hg
Post-Test Leak Check (1): 0.000 cfm @ 4 in. Hg
Post-Test Leak Check (2): 0.000 cfm @ 4 in. Hg
Average Test Piece Fuel Moisture: 20.72 Dry Basis %

Technician Signature:_____

Export to PDF

Meter Box Y Factor: 1.004 (1) 1.002 (2) 1.012 (Amb)

Barometric Pressure:	Begin	Middle	End	Average
	29.76	29.75	29.72	29.74

Room Air Velocity, fpn
0

OMNI Equipment Numbers: _____

Velocity Traverse Data

	Pt.1	Pt.2	Pt.3	Pt.4	Pt.5	Pt.6	Pt.7	Pt.8	Center	
Initial dP	0.070	0.072	0.082	0.064	0.058	0.086	0.084	0.068	0.098	"H2O
Temp:	78	78	78	78	78	78	78	78	78	°F

V_{strav} 18.09 ft/sec V_{scent} 21.01 ft/sec F_p 0.861

qwq

	Particulate Sampling Data														Fuel Weight (lb)		Temperature Data (°F)													Stack Gas Data		
Elapsed Time (min)	Gas Meter 1 (ft^3)	Gas Meter 2 (ft^3)	Sample Rate 1 (cfm)	Sample Rate 2 (cfm)	Orifice dH 1 ("H_2O)	Meter 1 Temp (°F)	Meter 1 Vacuum ("Hg)	Orifice dH 2 ("H_2O)	Meter 2 Temp (°F)	Meter 2 Vacuum ("Hg)	Dilution Tunnel (°F)	Dilution Tunnel Center dP	Pro. Rate 1	Pro. Rate 2	Scale Reading	Weight Change	Firebox Top	Firebox Bottom	Firebox Back	Firebox Left	Firebox Right	Avg. Stove Surface (Tot = ΔT)	Catalyst Exit	Stack	Filter 1	Dryer Exit 1	Filter 2	Dryer Exit 2	Ambient	Draft ("H_2O)	CO_2 (%)	CO (%)
41	6.500	6.522	0.16	0.16	1.28	71	2.68	1.01	71	2.2	78	0.096	100	101	13.9	-0.1	563	323	279	341	351	371	1012	321	65	49	64	49	61	-0.052	9.46	0.08
42	6.660	6.682	0.16	0.16	1.26	71	2.68	1.00	71	2.2	77	0.096	100	100	13.8	-0.1	571	322	278	341	352	373	1029	323	65	49	64	49	61	-0.053	9.54	0.09
43	6.821	6.841	0.16	0.16	1.28	71	2.67	1.01	71	2.2	78	0.090	104	103	13.7	-0.1	578	322	277	341	352	374	1041	324	65	49	64	49	61	-0.052	9.83	0.08
44	6.981	7.001	0.16	0.16	1.28	71	2.68	1.00	71	2.2	79	0.090	104	104	13.5	-0.2	585	321	276	341	352	375	1051	326	65	49	64	49	61	-0.052	9.88	0.08
45	7.141	7.160	0.16	0.16	1.30	71	2.7	1.00	71	2.2	79	0.090	104	103	13.4	-0.1	589	321	275	341	352	376	1054	327	65	50	64	49	61	-0.052	10	0.09
46	7.302	7.319	0.16	0.16	1.30	71	2.72	1.01	71	2.2	78	0.097	101	99	13.3	-0.1	594	320	274	342	353	377	1046	328	65	50	64	49	61	-0.054	10.24	0.09
47	7.464	7.480	0.16	0.16	1.30	71	2.7	1.00	72	2.2	78	0.100	100	99	13.2	-0.1	599	319	273	343	353	377	1052	330	65	50	64	50	61	-0.052	10.15	0.09
48	7.626	7.639	0.16	0.16	1.30	71	2.7	1.01	72	2.2	78	0.085	108	106	13.1	-0.1	603	318	273	344	353	378	1049	332	65	50	64	50	61	-0.054	10.54	0.12
49	7.788	7.798	0.16	0.16	1.30	71	2.71	1.00	72	2.2	78	0.095	102	100	13.0	-0.1	609	317	272	345	354	379	1059	334	65	50	64	50	61	-0.055	10.89	0.13
50	7.949	7.959	0.16	0.16	1.29	71	2.71	1.01	72	2.2	78	0.101	99	98	12.9	-0.1	613	316	271	346	354	380	1066	336	65	50	64	50	61	-0.055	11.24	0.21
51	8.111	8.118	0.16	0.16	1.30	72	2.71	1.01	72	2.2	77	0.098	100	99	12.8	-0.1	617	316	271	348	355	381	1063	336	65	50	64	50	61	-0.053	11.39	0.18
52	8.272	8.278	0.16	0.16	1.30	72	2.7	1.01	72	2.2	78	0.097	100	100	12.7	-0.1	622	316	271	349	355	383	1048	337	64	50	64	50	60	-0.052	11.35	0.12
53	8.434	8.438	0.16	0.16	1.30	72	2.72	1.00	72	2.2	78	0.099	100	99	12.5	-0.2	626	315	271	351	355	384	1084	337	64	50	64	50	61	-0.053	11.53	0.21
54	8.596	8.597	0.16	0.16	1.30	72	2.71	1.00	72	2.2	78	0.089	105	104	12.4	-0.1	630	315	271	353	356	385	1079	337	64	50	64	50	61	-0.054	11.51	0.15
55	8.759	8.757	0.16	0.16	1.30	72	2.71	1.01	72	2.2	78	0.094	103	101	12.3	-0.1	634	314	271	355	356	386	1053	338	64	50	64	50	61	-0.057	11.31	0.12
56	8.920	8.918	0.16	0.16	1.29	72	2.72	1.01	72	2.2	79	0.098	100	100	12.2	-0.1	638	314	271	356	357	387	1045	336	64	50	64	50	61	-0.052	11.18	0.14
57	9.082	9.077	0.16	0.16	1.29	72	2.7	1.01	72	2.2	79	0.098	101	99	12.1	-0.1	643	313	271	358	358	389	1068	338	64	51	64	50	61	-0.054	11.33	0.21
58	9.244	9.237	0.16	0.16	1.30	72	2.71	1.01	72	2.3	79	0.099	100	99	12.0	-0.1	648	313	272	359	358	390	1097	339	64	51	64	51	61	-0.054	11.51	0.2
59	9.405	9.397	0.16	0.16	1.30	72	2.71	1.00	72	2.3	80	0.091	104	103	11.8	-0.2	651	313	272	361	359	391	1056	340	64	51	64	50	62	-0.054	11.72	0.24
60	9.567	9.556	0.16	0.16	1.30	72	2.71	1.01	72	2.2	79	0.099	100	98	11.7	-0.1	655	313	272	362	360	392	1099	341	65	51	64	51	61	-0.057	11.81	0.3
61	9.728	9.716	0.16	0.16	1.28	72	3.09	1.00	72	2.2	79	0.101	98	98	11.6	-0.1	659	311	272	363	360	393	1093	343	64	51	64	51	62	-0.054	11.96	0.53
62	9.889	9.877	0.16	0.16	1.28	72	3.1	1.00	72	2.3	79	0.098	100	100	11.4	-0.2	664	312	273	365	362	395	1074	346	64	51	64	51	61	-0.058	12.23	0.59
63	10.049	10.036	0.16	0.16	1.27	72	3.11	1.00	72	2.3	79	0.099	99	98	11.3	-0.1	668	311	274	366	363	396	1075	348	64	51	64	51	61	-0.055	12.1	0.75
64	10.209	10.196	0.16	0.16	1.27	72	3.1	1.01	73	2.2	79	0.099	99	99	11.2	-0.1	682	311	275	368	364	400	1060	350	64	51	64	51	61	-0.057	11.91	1.24
65	10.369	10.356	0.16	0.16	1.28	72	3.09	1.00	73	2.3	79	0.097	100	100	11.1	-0.1	706	311	275	369	365	405	1090	354	62	51	64	51	62	-0.057	11.92	1.16
66	10.530	10.515	0.16	0.16	1.28	72	3.1	1.00	73	2.3	79	0.098	100	99	10.9	-0.2	727	310	276	370	365	410	1238	357	62	51	64	51	62	-0.057	12.01	1.3
67	10.690	10.675	0.16	0.16	1.27	72	3.11	1.01	73	2.3	79	0.100	98	98	10.8	-0.1	747	310	277	371	365	414	1272	361	63	51	64	51	61	-0.057	11.99	1.48
68	10.851	10.836	0.16	0.16	1.27	72	3.11	1.00	73	2.3	80	0.099	100	99	10.7	-0.1	763	310	277	371	365	417	1292	364	63	51	64	51	62	-0.058	12	1.73
69	11.011	10.995	0.16	0.16	1.27	72	3.1	1.01	73	2.3	80	0.097	100	99	10.5	-0.2	777	311	278	371	365	420	1306	366	63	51	64	51	62	-0.058	11.96	1.95
70	11.171	11.155	0.16	0.16	1.27	72	3.1	1.00	73	2.3	80	0.099	99	99	10.4	-0.1	787	310	278	372	365	422	1310	371	63	51	64	51	62	-0.058	11.88	2.22
71	11.331	11.316	0.16	0.16	1.27	72	3.12	1.00	73	2.3	80	0.097	100	100	10.3	-0.1	783	310	279	372	365	422	1288	373	63	51	64	51	61	-0.057	12.35	1.41
72	11.492	11.474	0.16	0.16	1.27	73	3.12	1.00	73	2.3	81	0.095	102	100	10.1	-0.2	774	310	280	373	366	421	1241	372	63	51	64	51	61	-0.060	12.36	1.9
73	11.652	11.634	0.16	0.16	1.26	73	3.11	1.01	73	2.3	80	0.099	99	99	10.0	-0.1	765	309	281	375	367	419	1088	370	63	51	64	51	61	-0.058	12.46	1.6
74	11.812	11.795	0.16	0.16	1.27	73	3.1	1.00	73	2.3	81	0.099	99	100	9.9	-0.1	758	309	282	377	368	419	1073	371	63	51	64	51	62	-0.058	12.38	2.21
75	11.972	11.954	0.16	0.16	1.27	73	3.1	1.00	73	2.3	81	0.099	99	98	9.7	-0.2	753	309	284	379	370	419	1067	371	64	51	64	51	61	-0.059	12.26	2.67
76	12.133	12.114	0.16	0.16	1.27	73	3.11	1.00	73	2.3	81	0.099	99	99	9.6	-0.1	749	309	286	383	372	420	1060	372	64	51	64	51	61	-0.059	12.22	2.61
77	12.293	12.274	0.16	0.16	1.27	73	3.12	1.00	73	2.3	81	0.090	104	104	9.4	-0.2	745	308	288	386	374	420	1052	372	64	51	64	51	61	-0.059	12.28	2.46
78	12.453	12.433	0.16	0.16	1.27	73	3.11	1.00	73	2.3	81	0.100	98	98	9.3	-0.1	741	308	291	389	376	421	1048	371	64	51	64	51	62	-0.058	12.3	2.26
79	12.613	12.593	0.16	0.16	1.26	73	3.11	1.00	73	2.3	81	0.098	99	99	9.1	-0.2	737	308	294	393	378	422	1044	370	64	51	64	52	62	-0.058	12.3	2.05
80	12.773	12.754	0.16	0.16	1.27	73	3.12	1.00	73	2.3	80	0.097	100	100	9.0	-0.1	733	307	297	397	381	423	1039	368	64	51	64	52	61	-0.059	12.31	1.75
81	12.934	12.913	0.16	0.16	1.27	73	3.12	1.00	73	2.3	81	0.097	101	99	8.9	-0.1	729	307	300	400	383	424	1036	367	64	52	64	52	61	-0.058	12.38	1.51
82	13.095	13.073	0.16	0.16	1.27	73	3.12	1.00	73	2.3	80	0.098	100	99	8.7	-0.2	726	307	304	404	385	425	1031	366	64	52	64	52	62	-0.058	12.41	1.2
83	13.254	13.233	0.16	0.16	1.27	73	3.1	1.00	73	2.3	80	0.099	98	99	8.6	-0.1	722	306	307	408	387	426	1029	363	64	52	64	52	62	-0.057	12.37	0.88
84	13.415	13.393	0.16	0.16	1.28	73	3.12	1.01	73	2.3	80	0.093	103	102	8.5	-0.1	719	306	310	412	389	427	998	361	64	52	64	52	62	-0.057	12.3	0.76

Wood Heater Test Data

u

Run: 3

Manufacturer: Kuma Stoves
Model: K-251
Tracking No.: 2464
Project No.: 0123WM014E
Test Date: 17-Apr-23
Beginning Clock Time: 11:49

Total Sampling Time: 368 min
Recording Interval: 1 min
Tunnel Diameter: 6
Background Sample Volume: 68.403 cubic feet

PM Control Modules: 335, 336
Dilution Tunnel MW(dry): 29.00 lb/lb-mole
Dilution Tunnel MW(wet): 28.78 lb/lb-mole
Dilution Tunnel H2O: 2.00 percent
Dilution Tunnel Static: -0.310 "H2O
Tunnel Area: 0.19635 ft2
Pitot Tube Cp: 0.99

Avg. Tunnel Velocity: 17.83 ft/sec.
Initial Tunnel Flow: 203.7 scfm
Average Tunnel Flow: 202.2 scfm
Post-Test Leak Check (1st Hr): 0.000 cfm @ 4 in. Hg
Post-Test Leak Check (1): 0.000 cfm @ 4 in. Hg
Post-Test Leak Check (2): 0.000 cfm @ 4 in. Hg
Average Test Piece Fuel Moisture: 20.72 Dry Basis %

Technician Signature:_____

Export to PDF

Meter Box Y Factor: 1.004 (1) 1.002 (2) 1.012 (Amb)

Barometric Pressure:	Begin	Middle	End	Average
	29.76	29.75	29.72	29.74

Room Air Velocity, fpn
0

OMNI Equipment Numbers: _____

Velocity Traverse Data

	Pt.1	Pt.2	Pt.3	Pt.4	Pt.5	Pt.6	Pt.7	Pt.8	Center	
Initial dP	0.070	0.072	0.082	0.064	0.058	0.086	0.084	0.068	0.098	"H2O
Temp:	78	78	78	78	78	78	78	78	78	°F

V_{strav} 18.09 ft/sec V_{scent} 21.01 ft/sec F_p 0.861

qwq

	Particulate Sampling Data														Fuel Weight (lb)		Temperature Data (°F)													Stack Gas Data		
Elapsed Time (min)	Gas Meter 1 (ft^3)	Gas Meter 2 (ft^3)	Sample Rate 1 (cfm)	Sample Rate 2 (cfm)	Orifice dH 1 ("H_2O)	Meter 1 Temp (°F)	Meter 1 Vacuum ("Hg)	Orifice dH 2 ("H_2O)	Meter 2 Temp (°F)	Meter 2 Vacuum ("Hg)	Dilution Tunnel (°F)	Dilution Tunnel Center dP	Pro. Rate 1	Pro. Rate 2	Scale Reading	Weight Change	Firebox Top	Firebox Bottom	Firebox Back	Firebox Left	Firebox Right	Avg. Stove Surface (Tot = ΔT)	Catalyst Exit	Stack	Filter 1	Dryer Exit 1	Filter 2	Dryer Exit 2	Ambient	Draft ("H_2O)	CO_2 (%)	CO (%)
85	13.575	13.553	0.16	0.16	1.27	73	3.12	1.01	73	2.3	80	0.098	99	99	8.4	-0.1	715	306	314	415	391	428	989	358	64	52	64	52	62	-0.057	12.19	0.48
86	13.736	13.713	0.16	0.16	1.27	73	3.12	1.00	73	2.3	80	0.095	101	101	8.3	-0.1	712	305	317	418	392	429	980	356	64	52	64	52	62	-0.055	12.17	0.3
87	13.897	13.872	0.16	0.16	1.27	73	3.12	1.00	73	2.3	80	0.099	99	98	8.2	-0.1	708	304	320	420	393	429	1003	354	64	52	64	52	62	-0.055	12.08	0.23
88	14.056	14.032	0.16	0.16	1.27	73	3.12	1.00	73	2.3	79	0.098	99	99	8.1	-0.1	704	304	323	423	395	430	1029	350	64	52	64	52	61	-0.055	11.85	0.15
89	14.216	14.193	0.16	0.16	1.28	73	3.12	1.01	73	2.3	79	0.091	103	104	8.0	-0.1	700	304	326	426	396	430	1017	348	64	52	64	52	61	-0.054	11.59	0.14
90	14.377	14.352	0.16	0.16	1.27	73	3.11	1.00	73	2.3	79	0.097	100	99	7.9	-0.1	696	303	328	429	397	431	1008	345	64	52	64	52	61	-0.055	11.23	0.13
91	14.538	14.512	0.16	0.16	1.28	73	3.1	1.01	73	2.3	79	0.096	101	100	7.8	-0.1	691	303	331	431	398	431	1001	343	64	52	64	52	62	-0.054	10.84	0.14
92	14.699	14.673	0.16	0.16	1.27	73	3.12	1.01	73	2.3	79	0.098	100	100	7.7	-0.1	687	303	333	433	399	431	945	339	64	52	64	52	62	-0.054	10.61	0.15
93	14.859	14.832	0.16	0.16	1.26	73	3.11	1.00	73	2.3	79	0.099	99	98	7.6	-0.1	683	303	335	435	400	431	952	338	64	52	64	52	62	-0.053	10.46	0.11
94	15.019	14.992	0.16	0.16	1.27	73	3.12	1.00	74	2.3	79	0.092	102	102	7.5	-0.1	679	303	337	437	401	431	942	335	64	52	64	52	61	-0.052	10.42	0.11
95	15.180	15.153	0.16	0.16	1.28	73	3.11	1.00	74	2.3	79	0.094	102	102	7.4	-0.1	675	302	339	438	402	431	993	333	64	52	64	52	62	-0.053	10.21	0.09
96	15.341	15.313	0.16	0.16	1.27	73	3.12	1.00	74	2.3	78	0.098	100	99	7.4	0	672	302	340	439	403	431	921	331	64	52	64	52	62	-0.052	9.78	0.1
97	15.501	15.473	0.16	0.16	1.28	73	3.1	1.01	74	2.3	78	0.100	98	98	7.3	-0.1	667	302	342	440	404	431	911	328	64	52	64	52	62	-0.053	9.44	0.09
98	15.662	15.633	0.16	0.16	1.27	73	3.11	1.01	74	2.3	78	0.099	99	98	7.2	-0.1	661	301	344	441	405	430	915	326	64	52	64	52	62	-0.051	9.32	0.09
99	15.822	15.793	0.16	0.16	1.27	73	3.11	1.00	74	2.3	78	0.098	99	99	7.2	0	657	301	345	441	405	430	916	325	64	52	64	52	62	-0.051	9.12	0.1
100	15.982	15.953	0.16	0.16	1.28	73	3.11	1.01	74	2.3	77	0.093	102	101	7.1	-0.1	654	301	346	441	406	430	915	323	64	52	64	52	62	-0.050	9.21	0.1
101	16.143	16.114	0.16	0.16	1.27	73	3.12	1.01	74	2.3	78	0.098	100	100	7.0	-0.1	651	300	346	441	406	429	918	321	64	52	64	52	62	-0.050	9.45	0.11
102	16.304	16.274	0.16	0.16	1.27	73	3.1	1.00	74	2.3	78	0.092	103	102	7.0	0	647	300	347	441	406	428	914	320	64	52	64	52	62	-0.049	9.49	0.11
103	16.465	16.433	0.16	0.16	1.27	73	3.12	1.00	74	2.3	77	0.099	99	98	6.9	-0.1	644	300	347	440	406	427	983	318	64	52	64	52	62	-0.050	9.5	0.12
104	16.625	16.594	0.16	0.16	1.27	73	3.11	1.00	74	2.3	78	0.090	103	104	6.8	-0.1	641	300	348	440	406	427	1013	317	64	52	64	52	62	-0.052	9.77	0.11
105	16.785	16.754	0.16	0.16	1.28	73	3.11	1.00	74	2.3	77	0.097	100	99	6.8	0	637	299	348	440	406	426	922	315	64	52	64	52	62	-0.049	9.69	0.11
106	16.946	16.914	0.16	0.16	1.28	73	3.11	1.01	74	2.3	78	0.094	102	101	6.7	-0.1	634	299	348	439	405	425	910	313	64	52	64	52	62	-0.048	9.78	0.13
107	17.107	17.074	0.16	0.16	1.28	73	3.12	1.01	74	2.3	77	0.092	103	102	6.6	-0.1	630	299	348	439	405	424	919	312	64	52	64	52	62	-0.051	9.79	0.11
108	17.267	17.235	0.16	0.16	1.27	73	3.11	1.01	74	2.3	76	0.099	98	99	6.6	0	625	299	347	438	405	423	902	311	65	52	64	52	62	-0.050	9.76	0.11
109	17.428	17.394	0.16	0.16	1.27	73	3.11	1.00	74	2.3	76	0.095	101	100	6.5	-0.1	621	298	347	438	405	422	897	308	64	52	64	52	62	-0.048	9.8	0.1
110	17.588	17.555	0.16	0.16	1.28	73	3.11	1.01	74	2.3	76	0.096	100	100	6.4	-0.1	616	298	347	438	406	421	903	307	64	52	64	52	62	-0.048	10.2	0.11
111	17.749	17.715	0.16	0.16	1.27	73	3.12	1.00	74	2.3	77	0.097	100	99	6.4	0	613	298	347	437	406	420	885	306	64	52	64	52	62	-0.049	10.21	0.12
112	17.910	17.875	0.16	0.16	1.27	74	3.11	1.01	74	2.3	77	0.100	98	98	6.3	-0.1	611	297	346	437	407	420	897	305	64	52	64	52	62	-0.048	10.28	0.12
113	18.071	18.035	0.16	0.16	1.27	74	3.12	1.01	74	2.3	77	0.100	98	98	6.2	-0.1	610	297	346	437	407	419	884	303	65	52	64	52	61	-0.048	10.41	0.12
114	18.231	18.196	0.16	0.16	1.27	74	3.12	1.01	74	2.3	77	0.099	98	99	6.2	0	608	297	346	436	408	419	897	303	65	52	64	52	62	-0.049	10.41	0.11
115	18.391	18.356	0.16	0.16	1.28	74	3.11	1.01	74	2.3	77	0.099	98	98	6.1	-0.1	607	297	346	436	408	419	945	303	65	52	64	52	62	-0.047	10.55	0.11
116	18.552	18.516	0.16	0.16	1.27	74	3.13	1.01	74	2.3	77	0.100	98	98	6.0	-0.1	605	296	346	436	409	418	883	302	65	52	64	52	61	-0.048	10.48	0.11
117	18.713	18.677	0.16	0.16	1.28	74	3.11	1.01	74	2.3	77	0.099	99	99	6.0	0	603	296	346	436	410	418	879	299	65	52	64	53	62	-0.047	10.3	0.1
118	18.874	18.837	0.16	0.16	1.28	74	3.12	1.00	74	2.3	76	0.098	99	99	5.9	-0.1	600	296	346	437	411	418	874	298	65	52	64	53	62	-0.047	10.22	0.09
119	19.034	18.997	0.16	0.16	1.27	74	3.12	1.01	74	2.3	77	0.100	98	98	5.9	0	597	296	346	437	412	418	869	296	65	52	64	53	62	-0.047	10.15	0.08
120	19.195	19.158	0.16	0.16	1.28	74	3.11	1.01	74	2.3	76	0.095	101	101	5.8	-0.1	595	296	346	438	413	418	866	295	65	52	64	53	62	-0.048	10.09	0.08
121	19.356	19.318	0.16	0.16	1.28	74	3.11	1.01	74	2.3	76	0.094	101	101	5.7	-0.1	592	297	346	438	415	418	864	294	65	52	64	53	62	-0.047	9.97	0.09
122	19.517	19.478	0.16	0.16	1.28	74	3.12	1.01	74	2.3	76	0.097	100	99	5.7	0	590	297	347	438	416	418	861	293	65	52	64	53	62	-0.046	9.71	0.08
123	19.678	19.639	0.16	0.16	1.28	74	3.11	1.01	74	2.3	76	0.093	102	102	5.6	-0.1	587	297	346	439	417	417	857	291	65	52	64	53	63	-0.045	9.66	0.08
124	19.839	19.799	0.16	0.16	1.27	74	3.1	1.00	74	2.3	76	0.087	105	105	5.6	0	585	297	347	439	418	417	851	289	65	52	64	53	62	-0.046	9.65	0.08
125	19.999	19.959	0.16	0.16	1.28	74	3.1	1.01	74	2.3	76	0.102	97	97	5.5	-0.1	581	297	347	439	419	417	846	288	65	52	64	53	62	-0.046	9.67	0.08
126	20.159	20.120	0.16	0.16	1.28	74	3.11	1.01	74	2.3	76	0.098	99	99	5.4	-0.1	578	297	348	439	420	416	842	286	65	52	64	53	62	-0.045	9.58	0.08
127	20.320	20.280	0.16	0.16	1.29	74	3.12	1.01	74	2.3	76	0.097	100	99	5.4	0	575	298	348	439	421	416	838	285	65	52	64	53	62	-0.045	9.56	0.08
128	20.482	20.440	0.16	0.16	1.28	74	3.11	1.01	74	2.3	75	0.092	103	102	5.3	-0.1	572	298	349	439	422	416	875	284	65	52	64	53	62	-0.045	9.5	0.09

Wood Heater Test Data

u

Run: 3

Manufacturer: Kuma Stoves
Model: K-251
Tracking No.: 2464
Project No.: 0123WM014E
Test Date: 17-Apr-23
Beginning Clock Time: 11:49

Total Sampling Time: 368 min
Recording Interval: 1 min
Tunnel Diameter: 6
Background Sample Volume: 68.403 cubic feet

PM Control Modules: 335, 336
Dilution Tunnel MW(dry): 29.00 lb/lb-mole
Dilution Tunnel MW(wet): 28.78 lb/lb-mole
Dilution Tunnel H2O: 2.00 percent
Dilution Tunnel Static: -0.310 "H2O
Tunnel Area: 0.19635 ft2
Pitot Tube Cp: 0.99

Avg. Tunnel Velocity: 17.83 ft/sec.
Initial Tunnel Flow: 203.7 scfm
Average Tunnel Flow: 202.2 scfm
Post-Test Leak Check (1st Hr): 0.000 cfm @ 4 in. Hg
Post-Test Leak Check (1): 0.000 cfm @ 4 in. Hg
Post-Test Leak Check (2): 0.000 cfm @ 4 in. Hg
Average Test Piece Fuel Moisture: 20.72 Dry Basis %

Technician Signature:_____

Export to PDF

Meter Box Y Factor: 1.004 (1) 1.002 (2) 1.012 (Amb)

Barometric Pressure:	Begin	Middle	End	Average
	29.76	29.75	29.72	29.74

Room Air Velocity, fpn
0

OMNI Equipment Numbers: _____

Velocity Traverse Data

	Pt.1	Pt.2	Pt.3	Pt.4	Pt.5	Pt.6	Pt.7	Pt.8	Center	
Initial dP	0.070	0.072	0.082	0.064	0.058	0.086	0.084	0.068	0.098	"H2O
Temp:	78	78	78	78	78	78	78	78	78	°F

V_{strav} 18.09 ft/sec V_{scent} 21.01 ft/sec F_p 0.861

qwq

	Particulate Sampling Data														Fuel Weight (lb)		Temperature Data (°F)													Stack Gas Data		
Elapsed Time (min)	Gas Meter 1 (ft^3)	Gas Meter 2 (ft^3)	Sample Rate 1 (cfm)	Sample Rate 2 (cfm)	Orifice dH 1 ("H_2O)	Meter 1 Temp (°F)	Meter 1 Vacuum ("Hg)	Orifice dH 2 ("H_2O)	Meter 2 Temp (°F)	Meter 2 Vacuum ("Hg)	Dilution Tunnel (°F)	Dilution Tunnel Center dP	Pro. Rate 1	Pro. Rate 2	Scale Reading	Weight Change	Firebox Top	Firebox Bottom	Firebox Back	Firebox Left	Firebox Right	Avg. Stove Surface (Tot = ΔT)	Catalyst Exit	Stack	Filter 1	Dryer Exit 1	Filter 2	Dryer Exit 2	Ambient	Draft ("H_2O)	CO_2 (%)	CO (%)
129	20.643	20.601	0.16	0.16	1.27	74	3.11	1.01	74	2.3	76	0.091	103	103	5.3	0	569	298	349	439	423	416	932	283	64	52	64	53	62	-0.045	9.48	0.08
130	20.803	20.762	0.16	0.16	1.27	74	3.1	1.01	74	2.3	75	0.100	98	98	5.2	-0.1	567	298	350	439	424	416	930	281	64	52	64	53	61	-0.045	9.32	0.1
131	20.964	20.922	0.16	0.16	1.28	74	3.11	1.01	74	2.3	75	0.100	98	98	5.2	0	565	299	350	439	425	416	928	280	64	52	64	53	61	-0.044	9.27	0.1
132	21.124	21.082	0.16	0.16	1.28	74	3.12	1.00	74	2.3	76	0.100	98	98	5.1	-0.1	563	299	351	439	425	415	927	279	64	52	64	53	61	-0.044	9.2	0.1
133	21.286	21.243	0.16	0.16	1.28	74	3.1	1.01	74	2.3	75	0.088	105	105	5.1	0	561	299	351	439	426	415	926	278	64	52	64	53	62	-0.044	9.15	0.1
134	21.447	21.403	0.16	0.16	1.28	74	3.11	1.01	74	2.3	75	0.095	101	100	5.0	-0.1	559	300	352	439	427	415	923	276	64	52	64	53	62	-0.044	9.15	0.1
135	21.608	21.563	0.16	0.16	1.27	74	3.12	1.01	74	2.3	75	0.098	99	99	5.0	0	557	300	352	439	427	415	921	276	64	52	64	53	61	-0.044	9.11	0.1
136	21.768	21.725	0.16	0.16	1.28	74	3.12	1.01	74	2.3	75	0.092	102	103	4.9	-0.1	556	300	353	439	428	415	921	275	64	52	64	53	61	-0.043	9.28	0.11
137	21.929	21.885	0.16	0.16	1.28	74	3.1	1.00	74	2.3	75	0.091	103	102	4.9	0	554	301	353	439	428	415	921	276	64	52	64	53	61	-0.043	9.26	0.1
138	22.090	22.045	0.16	0.16	1.28	74	3.11	1.01	74	2.3	75	0.101	98	97	4.8	-0.1	553	301	353	439	429	415	920	275	64	52	64	53	61	-0.044	9.18	0.1
139	22.252	22.206	0.16	0.16	1.28	74	3.11	1.01	74	2.3	74	0.099	99	99	4.8	0	551	301	353	439	429	415	859	275	64	52	64	53	61	-0.044	9.09	0.1
140	22.412	22.366	0.16	0.16	1.28	74	3.12	1.00	74	2.3	74	0.094	101	101	4.8	0	550	301	354	439	429	415	919	275	64	52	64	53	61	-0.044	9.13	0.1
141	22.573	22.527	0.16	0.16	1.28	74	3.11	1.01	74	2.3	73	0.097	100	100	4.7	-0.1	550	302	355	439	429	415	920	275	64	52	64	53	61	-0.045	9.11	0.1
142	22.734	22.687	0.16	0.16	1.28	74	3.11	1.01	74	2.3	73	0.100	98	98	4.7	0	549	302	355	439	429	415	920	275	64	52	64	53	61	-0.045	9.17	0.1
143	22.895	22.848	0.16	0.16	1.28	74	3.1	1.01	74	2.3	73	0.101	98	98	4.6	-0.1	547	302	356	439	429	415	918	275	64	52	63	53	62	-0.044	9.08	0.09
144	23.056	23.008	0.16	0.16	1.28	74	3.11	1.01	74	2.2	73	0.100	98	98	4.6	0	546	302	356	439	429	414	916	274	64	52	63	53	61	-0.045	9.17	0.09
145	23.218	23.169	0.16	0.16	1.28	74	3.11	1.01	74	2.3	73	0.101	98	98	4.5	-0.1	544	303	358	439	429	415	914	273	63	52	63	53	61	-0.044	9.17	0.09
146	23.379	23.330	0.16	0.16	1.27	74	3.1	1.00	74	2.3	73	0.091	103	103	4.5	0	543	303	359	439	429	415	913	272	63	52	63	53	62	-0.043	9.15	0.09
147	23.539	23.490	0.16	0.16	1.28	74	3.11	1.01	74	2.3	74	0.099	98	98	4.4	-0.1	542	303	360	439	429	415	912	272	63	52	63	53	61	-0.044	9.18	0.09
148	23.700	23.650	0.16	0.16	1.28	74	3.1	1.00	74	2.3	73	0.099	99	98	4.4	0	540	304	361	440	429	415	912	272	63	52	63	53	61	-0.043	9.17	0.09
149	23.861	23.811	0.16	0.16	1.28	74	3.1	1.00	74	2.3	74	0.093	102	102	4.3	-0.1	539	304	362	440	429	415	911	271	63	52	63	53	61	-0.043	9.21	0.09
150	24.022	23.972	0.16	0.16	1.28	74	3.11	1.00	74	2.3	74	0.100	98	98	4.3	0	538	305	363	440	430	415	911	271	64	52	63	53	62	-0.043	9.35	0.09
151	24.184	24.131	0.16	0.16	1.28	74	3.12	1.01	74	2.3	74	0.098	100	98	4.2	-0.1	537	305	363	440	430	415	911	271	64	52	63	53	62	-0.044	9.42	0.1
152	24.345	24.292	0.16	0.16	1.27	74	3.11	1.01	74	2.3	73	0.098	99	99	4.2	0	537	304	364	441	430	415	912	271	63	52	63	52	61	-0.043	9.47	0.1
153	24.505	24.453	0.16	0.16	1.28	74	3.12	1.00	74	2.3	75	0.098	99	99	4.1	-0.1	537	304	365	441	430	415	914	271	63	52	63	52	61	-0.043	9.58	0.1
154	24.665	24.613	0.16	0.16	1.28	74	3.1	1.01	74	2.3	75	0.094	101	101	4.1	0	538	305	365	441	430	416	918	272	64	52	63	52	61	-0.044	9.5	0.09
155	24.826	24.773	0.16	0.16	1.28	74	3.11	1.01	74	2.3	75	0.096	100	100	4.0	-0.1	540	305	367	441	431	417	923	273	64	52	63	52	61	-0.044	9.62	0.09
156	24.988	24.935	0.16	0.16	1.28	74	3.11	1.00	74	2.3	74	0.094	102	102	4.0	0	541	306	367	441	430	417	927	274	64	52	63	52	61	-0.044	9.65	0.09
157	25.149	25.095	0.16	0.16	1.27	74	3.11	1.00	74	2.3	74	0.098	99	99	3.9	-0.1	543	306	367	441	430	417	929	274	64	52	63	52	61	-0.044	9.76	0.09
158	25.309	25.255	0.16	0.16	1.27	74	3.12	1.01	74	2.3	74	0.097	99	99	3.9	0	544	306	368	441	430	418	931	274	64	52	63	52	61	-0.044	9.63	0.1
159	25.470	25.416	0.16	0.16	1.28	74	3.11	1.00	74	2.3	74	0.099	99	99	3.8	-0.1	545	306	369	441	430	418	932	275	64	51	63	52	61	-0.044	9.5	0.1
160	25.631	25.576	0.16	0.16	1.28	74	3.1	1.00	74	2.3	75	0.098	99	99	3.8	0	546	306	370	442	430	419	933	274	64	51	63	52	62	-0.044	9.59	0.1
161	25.792	25.736	0.16	0.16	1.28	74	3.1	1.01	74	2.3	74	0.093	102	101	3.7	-0.1	548	307	370	442	429	419	937	274	64	51	63	52	62	-0.044	9.54	0.1
162	25.953	25.897	0.16	0.16	1.28	74	3.11	1.01	74	2.3	73	0.094	101	101	3.7	0	550	307	371	442	429	420	940	275	64	51	63	52	62	-0.044	9.35	0.11
163	26.114	26.058	0.16	0.16	1.27	74	3.1	1.00	74	2.3	74	0.094	101	101	3.6	-0.1	550	307	372	442	428	420	940	274	64	52	63	52	62	-0.044	9.21	0.11
164	26.275	26.217	0.16	0.16	1.28	74	3.12	1.00	74	2.3	74	0.095	101	100	3.6	0	550	308	372	442	428	420	937	274	64	51	63	52	61	-0.043	9.09	0.1
165	26.435	26.378	0.16	0.16	1.28	74	3.1	1.00	74	2.3	73	0.097	99	100	3.6	0	550	308	373	442	427	420	933	273	64	51	63	52	62	-0.043	8.93	0.1
166	26.596	26.539	0.16	0.16	1.27	74	3.11	1.00	74	2.3	73	0.098	99	99	3.5	-0.1	548	309	374	442	427	420	928	272	64	51	63	52	62	-0.043	8.76	0.1
167	26.758	26.699	0.16	0.16	1.28	74	3.1	1.01	74	2.3	73	0.100	99	98	3.5	0	546	309	375	442	427	420	923	270	64	51	63	52	62	-0.044	8.76	0.1
168	26.919	26.859	0.16	0.16	1.28	74	3.12	1.00	74	2.3	73	0.098	99	99	3.5	0	543	310	375	442	426	419	916	269	64	51	63	52	61	-0.043	8.54	0.09
169	27.079	27.021	0.16	0.16	1.27	74	3.11	1.00	74	2.3	72	0.098	98	100	3.4	-0.1	540	310	376	442	426	419	908	268	64	51	63	52	62	-0.043	8.5	0.09
170	27.240	27.180	0.16	0.16	1.28	74	3.11	1.00	74	2.3	73	0.096	100	99	3.4	0	536	310	376	442	426	418	900	266	64	51	63	52	62	-0.042	8.45	0.08
171	27.401	27.341	0.16	0.16	1.28	74	3.11	1.01	74	2.3	73	0.093	102	102	3.3	-0.1	532	310	376	442	425	417	893	265	64	51	63	52	62	-0.042	8.49	0.08
172	27.561	27.502	0.16	0.16	1.28	74	3.12	1.00	74	2.3	73	0.092	102	102	3.3	0	529	311	377	441	425	417	887	263	64	51	63	52	62	-0.041	8.45	0.08

Wood Heater Test Data

u

Run: 3

Manufacturer: Kuma Stoves
Model: K-251
Tracking No.: 2464
Project No.: 0123WM014E
Test Date: 17-Apr-23
Beginning Clock Time: 11:49

Total Sampling Time: 368 min
Recording Interval: 1 min
Tunnel Diameter: 6
Background Sample Volume: 68.403 cubic feet

PM Control Modules: 335, 336
Dilution Tunnel MW(dry): 29.00 lb/lb-mole
Dilution Tunnel MW(wet): 28.78 lb/lb-mole
Dilution Tunnel H2O: 2.00 percent
Dilution Tunnel Static: -0.310 "H2O
Tunnel Area: 0.19635 ft2
Pitot Tube Cp: 0.99

Avg. Tunnel Velocity: 17.83 ft/sec.
Initial Tunnel Flow: 203.7 scfm
Average Tunnel Flow: 202.2 scfm
Post-Test Leak Check (1st Hr): 0.000 cfm @ 4 in. Hg
Post-Test Leak Check (1): 0.000 cfm @ 4 in. Hg
Post-Test Leak Check (2): 0.000 cfm @ 4 in. Hg
Average Test Piece Fuel Moisture: 20.72 Dry Basis %

Technician Signature:_____

Export to PDF

Meter Box Y Factor: 1.004 (1) 1.002 (2) 1.012 (Amb)

Barometric Pressure:	Begin	Middle	End	Average
	29.76	29.75	29.72	29.74

Room Air Velocity, fpn
0

OMNI Equipment Numbers: _____

Velocity Traverse Data

	Pt.1	Pt.2	Pt.3	Pt.4	Pt.5	Pt.6	Pt.7	Pt.8	Center	
Initial dP	0.070	0.072	0.082	0.064	0.058	0.086	0.084	0.068	0.098	"H2O
Temp:	78	78	78	78	78	78	78	78	78	°F

V_{strav} 18.09 ft/sec V_{scent} 21.01 ft/sec F_p 0.861

qwq

	Particulate Sampling Data														Fuel Weight (lb)		Temperature Data (°F)													Stack Gas Data		
Elapsed Time (min)	Gas Meter 1 (ft^3)	Gas Meter 2 (ft^3)	Sample Rate 1 (cfm)	Sample Rate 2 (cfm)	Orifice dH 1 ("H_2O)	Meter 1 Temp (°F)	Meter 1 Vacuum ("Hg)	Orifice dH 2 ("H_2O)	Meter 2 Temp (°F)	Meter 2 Vacuum ("Hg)	Dilution Tunnel (°F)	Dilution Tunnel Center dP	Pro. Rate 1	Pro. Rate 2	Scale Reading	Weight Change	Firebox Top	Firebox Bottom	Firebox Back	Firebox Left	Firebox Right	Avg. Stove Surface (Tot = ΔT)	Catalyst Exit	Stack	Filter 1	Dryer Exit 1	Filter 2	Dryer Exit 2	Ambient	Draft ("H_2O)	CO_2 (%)	CO (%)
173	27.723	27.662	0.16	0.16	1.28	74	3.12	1.00	74	2.3	74	0.099	99	98	3.3	0	525	311	377	441	425	416	882	262	64	51	63	52	62	-0.040	8.48	0.08
174	27.884	27.822	0.16	0.16	1.28	74	3.12	1.01	74	2.3	74	0.094	101	101	3.2	-0.1	522	312	378	441	425	416	877	260	64	51	63	52	62	-0.040	8.46	0.08
175	28.045	27.983	0.16	0.16	1.27	74	3.11	1.00	74	2.3	74	0.097	100	100	3.2	0	519	312	378	441	425	415	874	258	64	51	63	52	62	-0.040	8.43	0.08
176	28.205	28.143	0.16	0.16	1.28	74	3.11	1.00	74	2.3	74	0.097	99	99	3.2	0	516	313	378	440	425	414	870	257	64	51	63	52	62	-0.041	8.39	0.09
177	28.366	28.303	0.16	0.16	1.28	74	3.12	1.01	74	2.3	73	0.099	99	98	3.1	-0.1	513	313	379	440	424	414	794	256	64	51	63	52	62	-0.041	8.34	0.08
178	28.528	28.464	0.16	0.16	1.27	74	3.1	1.00	74	2.3	73	0.101	98	98	3.1	0	511	314	380	440	424	414	769	255	64	51	63	52	62	-0.040	8.33	0.08
179	28.689	28.625	0.16	0.16	1.27	74	3.12	1.00	74	2.3	74	0.089	104	104	3.1	0	508	315	380	440	424	413	763	255	64	51	63	52	62	-0.039	8.37	0.09
180	28.849	28.785	0.16	0.16	1.27	74	3.11	1.00	74	2.3	74	0.100	98	98	3.1	0	506	315	380	439	424	413	760	253	64	51	63	52	62	-0.040	8.23	0.09
181	29.010	28.945	0.16	0.16	1.28	74	3.11	1.00	74	2.3	74	0.092	102	102	3.0	-0.1	504	315	380	439	424	412	758	253	64	51	63	52	62	-0.040	8.28	0.09
182	29.170	29.106	0.16	0.16	1.27	74	3.1	1.00	74	2.3	74	0.094	101	101	3.0	0	502	316	381	438	424	412	756	252	64	51	63	52	62	-0.040	8.24	0.09
183	29.331	29.266	0.16	0.16	1.28	74	3.12	1.00	74	2.3	74	0.098	99	99	3.0	0	500	317	381	438	424	412	755	251	64	51	63	52	62	-0.039	8.29	0.09
184	29.493	29.426	0.16	0.16	1.28	74	3.11	1.00	74	2.3	74	0.090	104	103	2.9	-0.1	498	317	381	438	424	412	752	250	64	51	63	52	62	-0.039	8.21	0.09
185	29.654	29.587	0.16	0.16	1.25	74	3.09	1.00	74	2.3	74	0.087	105	105	2.9	0	497	318	382	437	424	412	751	250	64	51	63	52	62	-0.039	8.2	0.1
186	29.813	29.747	0.16	0.16	1.27	74	3.09	1.00	74	2.3	73	0.098	98	99	2.9	0	495	318	382	437	424	411	749	249	64	51	64	52	62	-0.038	8.12	0.1
187	29.973	29.908	0.16	0.16	1.27	74	3.09	1.00	74	2.3	74	0.099	98	99	2.9	0	493	319	382	437	424	411	748	249	64	51	64	52	62	-0.039	8.13	0.1
188	30.133	30.069	0.16	0.16	1.26	74	3.1	1.00	74	2.3	73	0.097	99	100	2.9	0	492	319	382	436	424	411	747	249	64	51	64	52	62	-0.039	8.19	0.1
189	30.295	30.229	0.16	0.16	1.26	74	3.1	1.00	74	2.3	73	0.098	100	99	2.8	-0.1	491	320	382	435	424	410	747	248	64	51	63	52	62	-0.039	8.17	0.1
190	30.455	30.389	0.16	0.16	1.27	74	3.09	1.01	74	2.3	73	0.099	98	98	2.7	-0.1	489	320	382	435	424	410	745	248	64	51	64	52	62	-0.039	8.14	0.1
191	30.615	30.550	0.16	0.16	1.27	74	3.1	1.01	74	2.3	73	0.091	102	103	2.7	0	488	321	382	435	424	410	749	248	64	51	64	52	62	-0.039	8.1	0.1
192	30.775	30.710	0.16	0.16	1.27	74	3.1	1.00	74	2.3	73	0.091	102	102	2.7	0	487	321	382	434	424	410	756	247	64	51	64	52	61	-0.038	8.03	0.11
193	30.935	30.870	0.16	0.16	1.26	74	3.1	1.00	74	2.3	74	0.098	99	99	2.7	0	486	321	383	434	424	410	761	246	64	51	64	52	62	-0.038	7.91	0.11
194	31.096	31.031	0.16	0.16	1.27	74	3.09	1.00	74	2.3	74	0.093	102	102	2.6	-0.1	485	321	382	433	424	409	759	245	64	51	64	52	62	-0.038	7.76	0.1
195	31.256	31.192	0.16	0.16	1.26	74	3.11	1.00	74	2.3	74	0.097	99	100	2.6	0	483	322	382	433	424	409	755	243	64	51	64	52	62	-0.038	7.63	0.1
196	31.416	31.352	0.16	0.16	1.26	74	3.1	1.00	74	2.3	73	0.098	98	99	2.6	0	480	322	382	433	424	408	749	242	64	51	64	52	62	-0.038	7.56	0.1
197	31.576	31.512	0.16	0.16	1.27	74	3.09	1.00	74	2.3	73	0.097	99	99	2.6	0	478	322	382	432	424	408	744	241	64	51	64	52	62	-0.037	7.45	0.1
198	31.736	31.673	0.16	0.16	1.27	74	3.09	1.00	74	2.3	73	0.087	104	105	2.5	-0.1	475	322	382	432	424	407	739	240	64	51	64	52	62	-0.037	7.42	0.1
199	31.898	31.833	0.16	0.16	1.27	74	3.09	1.00	74	2.3	73	0.090	104	103	2.5	0	472	323	382	431	424	406	734	238	64	51	64	52	62	-0.037	7.38	0.1
200	32.058	31.994	0.16	0.16	1.26	74	3.09	1.00	74	2.3	73	0.089	103	104	2.5	0	469	323	382	431	424	406	728	237	64	51	64	52	62	-0.036	7.35	0.1
201	32.218	32.155	0.16	0.16	1.26	74	3.11	1.00	74	2.3	73	0.099	98	99	2.5	0	466	323	381	430	424	405	723	236	64	51	64	52	62	-0.036	7.27	0.1
202	32.378	32.315	0.16	0.16	1.27	74	3.09	1.00	74	2.3	73	0.100	97	98	2.5	0	464	323	381	429	423	404	712	235	64	51	64	52	62	-0.037	7.3	0.1
203	32.538	32.475	0.16	0.16	1.26	74	3.11	1.00	74	2.3	73	0.093	101	101	2.5	0	461	323	381	429	423	403	709	233	64	51	64	52	62	-0.036	7.23	0.11
204	32.699	32.636	0.16	0.16	1.27	74	3.1	1.00	74	2.3	73	0.092	102	102	2.4	-0.1	459	323	381	428	423	403	707	232	64	51	64	52	62	-0.037	7.19	0.11
205	32.859	32.796	0.16	0.16	1.26	74	3.1	1.00	74	2.3	72	0.099	98	98	2.4	0	457	323	380	428	422	402	704	232	64	51	64	52	62	-0.036	7.19	0.1
206	33.019	32.956	0.16	0.16	1.26	74	3.1	1.00	74	2.3	72	0.097	99	99	2.4	0	454	323	380	427	422	401	699	231	64	51	64	52	62	-0.036	7.15	0.1
207	33.179	33.117	0.16	0.16	1.26	74	3.09	1.00	74	2.3	72	0.099	98	99	2.4	0	451	324	379	426	422	400	696	230	64	51	64	52	62	-0.036	7.13	0.1
208	33.340	33.278	0.16	0.16	1.27	74	3.1	1.00	74	2.3	72	0.098	99	99	2.4	0	449	324	379	426	421	400	693	229	64	51	64	52	62	-0.036	7.1	0.1
209	33.500	33.438	0.16	0.16	1.26	74	3.11	1.00	74	2.3	72	0.092	102	102	2.3	-0.1	447	324	379	425	421	399	690	228	64	51	64	52	61	-0.036	7.09	0.11
210	33.661	33.598	0.16	0.16	1.26	74	3.11	1.00	74	2.3	72	0.100	98	97	2.3	0	445	324	378	424	420	398	688	228	64	51	64	52	62	-0.036	7.14	0.11
211	33.821	33.759	0.16	0.16	1.27	74	3.1	1.00	74	2.3	72	0.099	98	99	2.3	0	443	325	379	424	420	398	686	228	64	51	64	52	62	-0.035	7.12	0.11
212	33.981	33.919	0.16	0.16	1.27	74	3.1	1.00	74	2.3	72	0.101	97	97	2.3	0	441	326	378	423	419	397	684	227	64	51	64	52	62	-0.036	7.11	0.11
213	34.142	34.080	0.16	0.16	1.27	74	3.1	1.00	74	2.3	72	0.098	99	99	2.3	0	440	326	378	422	419	397	682	227	64	51	64	52	62	-0.035	7.13	0.1
214	34.302	34.241	0.16	0.16	1.26	74	3.1	1.00	74	2.3	72	0.095	100	101	2.2	-0.1	438	326	378	421	418	396	679	226	64	51	64	52	62	-0.036	7.03	0.1
215	34.462	34.401	0.16	0.16	1.26	74	3.11	0.99	74	2.3	71	0.099	98	98	2.2	0	436	327	378	421	418	396	678	226	64	51	64	52	62	-0.036	7.01	0.1
216	34.622	34.561	0.16	0.16	1.26	74	3.1	1.00	74	2.3	72	0.097	99	99	2.2	0	435	326	377	420	417	395	676	224	64	51	64	52	62	-0.036	7.02	0.1

Wood Heater Test Data

u

Run: 3

Manufacturer: Kuma Stoves
Model: K-251
Tracking No.: 2464
Project No.: 0123WM014E
Test Date: 17-Apr-23
Beginning Clock Time: 11:49

Total Sampling Time: 368 min
Recording Interval: 1 min
Tunnel Diameter: 6
Background Sample Volume: 68.403 cubic feet

PM Control Modules: 335, 336
Dilution Tunnel MW(dry): 29.00 lb/lb-mole
Dilution Tunnel MW(wet): 28.78 lb/lb-mole
Dilution Tunnel H2O: 2.00 percent
Dilution Tunnel Static: -0.310 "H2O
Tunnel Area: 0.19635 ft2
Pitot Tube Cp: 0.99

Avg. Tunnel Velocity: 17.83 ft/sec.
Initial Tunnel Flow: 203.7 scfm
Average Tunnel Flow: 202.2 scfm
Post-Test Leak Check (1st Hr): 0.000 cfm @ 4 in. Hg
Post-Test Leak Check (1): 0.000 cfm @ 4 in. Hg
Post-Test Leak Check (2): 0.000 cfm @ 4 in. Hg
Average Test Piece Fuel Moisture: 20.72 Dry Basis %

Technician Signature:_____

Meter Box Y Factor: 1.004 (1) 1.002 (2) 1.012 (Amb)

Export to PDF

Barometric Pressure:	Begin	Middle	End	Average
	29.76	29.75	29.72	29.74

Room Air Velocity, fpn
0

OMNI Equipment Numbers: _____

Velocity Traverse Data

	Pt.1	Pt.2	Pt.3	Pt.4	Pt.5	Pt.6	Pt.7	Pt.8	Center	
Initial dP	0.070	0.072	0.082	0.064	0.058	0.086	0.084	0.068	0.098	"H2O
Temp:	78	78	78	78	78	78	78	78	78	°F

V_{strav} 18.09 ft/sec V_{scent} 21.01 ft/sec F_p 0.861

qwq

	Particulate Sampling Data														Fuel Weight (lb)		Temperature Data (°F)													Stack Gas Data		
Elapsed Time (min)	Gas Meter 1 (ft^3)	Gas Meter 2 (ft^3)	Sample Rate 1 (cfm)	Sample Rate 2 (cfm)	Orifice dH 1 ("H_2O)	Meter 1 Temp (°F)	Meter 1 Vacuum ("Hg)	Orifice dH 2 ("H_2O)	Meter 2 Temp (°F)	Meter 2 Vacuum ("Hg)	Dilution Tunnel (°F)	Dilution Tunnel Center dP	Pro. Rate 1	Pro. Rate 2	Scale Reading	Weight Change	Firebox Top	Firebox Bottom	Firebox Back	Firebox Left	Firebox Right	Avg. Stove Surface (Tot = ΔT)	Catalyst Exit	Stack	Filter 1	Dryer Exit 1	Filter 2	Dryer Exit 2	Ambient	Draft ("H_2O)	CO_2 (%)	CO (%)
217	34.782	34.722	0.16	0.16	1.27	74	3.1	1.00	74	2.3	72	0.096	99	100	2.2	0	433	327	377	419	416	394	682	224	64	51	64	52	62	-0.036	6.82	0.1
218	34.943	34.883	0.16	0.16	1.26	74	3.11	1.00	74	2.3	71	0.095	100	100	2.2	0	431	327	378	419	416	394	679	224	64	51	64	52	62	-0.035	6.7	0.09
219	35.104	35.042	0.16	0.16	1.26	74	3.1	1.00	74	2.3	71	0.099	98	97	2.2	0	429	327	378	418	415	393	676	223	64	51	64	52	62	-0.036	6.61	0.09
220	35.264	35.203	0.16	0.16	1.26	74	3.1	1.00	74	2.3	71	0.101	97	97	2.2	0	427	328	377	417	415	393	673	222	64	51	64	52	62	-0.035	6.62	0.1
221	35.424	35.364	0.16	0.16	1.27	74	3.09	0.99	74	2.3	71	0.096	99	100	2.1	-0.1	425	328	377	417	414	392	672	222	64	51	64	52	62	-0.035	6.52	0.11
222	35.584	35.524	0.16	0.16	1.26	74	3.1	1.00	74	2.3	71	0.097	99	99	2.1	0	424	328	376	416	413	391	673	222	64	51	64	52	62	-0.035	6.53	0.12
223	35.745	35.684	0.16	0.16	1.27	74	3.1	1.00	74	2.3	71	0.097	99	99	2.1	0	423	328	376	415	412	391	668	222	64	51	64	52	62	-0.035	6.5	0.12
224	35.905	35.846	0.16	0.16	1.26	74	3.11	1.00	74	2.3	72	0.098	98	100	2.1	0	422	328	376	414	411	390	666	221	64	51	64	52	62	-0.035	6.49	0.12
225	36.065	36.006	0.16	0.16	1.27	74	3.1	1.00	74	2.3	71	0.098	98	98	2.1	0	422	329	375	413	411	390	665	221	64	51	64	52	62	-0.036	6.42	0.12
226	36.225	36.166	0.16	0.16	1.27	74	3.1	1.00	74	2.3	71	0.097	99	99	2.1	0	421	329	374	412	410	389	664	221	64	51	64	52	62	-0.035	6.39	0.12
227	36.385	36.328	0.16	0.16	1.27	74	3.11	1.00	74	2.3	71	0.095	100	101	2.0	-0.1	420	329	373	411	409	388	664	220	64	51	64	52	62	-0.035	6.39	0.12
228	36.547	36.487	0.16	0.16	1.27	74	3.1	1.00	74	2.3	72	0.094	102	100	2.0	0	418	329	373	410	408	388	662	219	64	51	64	52	62	-0.034	6.38	0.12
229	36.707	36.648	0.16	0.16	1.27	74	3.1	0.99	74	2.3	72	0.096	99	100	2.0	0	417	329	372	409	408	387	664	218	64	51	64	52	62	-0.034	6.32	0.12
230	36.867	36.809	0.16	0.16	1.26	74	3.09	1.00	74	2.3	71	0.092	101	102	2.0	0	416	328	371	408	407	386	711	219	64	51	64	52	62	-0.035	6.2	0.12
231	37.027	36.969	0.16	0.16	1.27	74	3.11	0.99	74	2.3	71	0.101	97	97	2.0	0	415	328	370	407	406	385	671	218	64	51	64	52	62	-0.035	6.05	0.12
232	37.187	37.129	0.16	0.16	1.27	74	3.09	1.00	74	2.3	71	0.096	99	99	2.0	0	413	328	369	405	405	384	669	218	64	51	64	52	62	-0.035	5.99	0.12
233	37.348	37.290	0.16	0.16	1.26	74	3.1	1.00	74	2.3	72	0.096	100	100	2.0	0	412	328	368	404	405	383	667	217	64	51	64	52	62	-0.034	5.98	0.12
234	37.508	37.451	0.16	0.16	1.26	74	3.1	1.00	74	2.3	71	0.098	98	99	1.9	-0.1	411	328	368	403	404	383	665	217	64	51	64	52	62	-0.034	5.93	0.12
235	37.668	37.611	0.16	0.16	1.26	74	3.11	1.00	74	2.3	71	0.089	103	103	1.9	0	409	328	367	402	403	382	663	216	64	51	64	52	62	-0.035	5.97	0.12
236	37.828	37.771	0.16	0.16	1.27	74	3.09	1.00	74	2.3	70	0.098	98	98	1.9	0	408	328	367	401	402	381	661	216	64	51	64	52	62	-0.036	5.86	0.12
237	37.989	37.932	0.16	0.16	1.27	74	3.1	1.00	74	2.3	70	0.094	101	101	1.9	0	406	328	366	399	401	380	659	216	64	51	64	52	62	-0.035	5.88	0.12
238	38.150	38.092	0.16	0.16	1.26	74	3.1	1.00	74	2.3	69	0.097	99	99	1.9	0	405	327	364	398	400	379	657	216	64	51	64	52	62	-0.035	5.85	0.12
239	38.310	38.253	0.16	0.16	1.26	74	3.09	1.00	74	2.3	69	0.092	101	102	1.9	0	404	327	364	397	400	378	680	215	64	51	63	52	61	-0.035	5.85	0.11
240	38.470	38.414	0.16	0.16	1.27	74	3.09	1.00	74	2.3	69	0.093	101	101	1.9	0	402	327	363	396	399	377	673	215	64	51	63	52	62	-0.036	5.84	0.11
241	38.630	38.574	0.16	0.16	1.27	74	3.09	1.00	74	2.3	69	0.084	106	106	1.8	-0.1	401	327	363	394	398	377	663	214	64	51	63	52	62	-0.035	5.88	0.11
242	38.791	38.735	0.16	0.16	1.27	74	3.09	1.00	74	2.3	70	0.098	99	99	1.8	0	399	326	362	393	397	375	661	213	64	51	63	52	62	-0.034	5.85	0.12
243	38.952	38.896	0.16	0.16	1.27	74	3.1	1.00	74	2.3	71	0.089	104	104	1.8	0	398	326	361	392	396	375	660	212	64	51	63	52	62	-0.034	5.87	0.12
244	39.112	39.056	0.16	0.16	1.26	74	3.09	1.00	74	2.3	70	0.096	99	99	1.8	0	397	327	360	391	396	374	660	213	64	51	63	52	62	-0.034	5.88	0.12
245	39.272	39.217	0.16	0.16	1.26	74	3.09	1.00	74	2.3	70	0.091	102	103	1.8	0	396	327	360	389	395	373	659	212	64	51	63	52	62	-0.034	5.82	0.12
246	39.432	39.377	0.16	0.16	1.27	74	3.1	1.00	74	2.3	70	0.095	100	100	1.8	0	395	327	359	388	394	373	657	212	64	51	63	52	62	-0.034	5.9	0.12
247	39.593	39.538	0.16	0.16	1.27	74	3.1	1.00	74	2.3	70	0.091	103	103	1.8	0	394	327	358	387	393	372	656	212	64	51	63	52	62	-0.034	5.93	0.12
248	39.754	39.698	0.16	0.16	1.26	74	3.09	1.00	74	2.3	70	0.098	99	98	1.8	0	393	327	357	386	393	371	655	211	64	51	63	52	62	-0.034	5.9	0.11
249	39.914	39.859	0.16	0.16	1.26	74	3.1	1.00	74	2.3	70	0.096	99	100	1.7	-0.1	391	327	357	385	392	370	653	211	64	51	63	52	62	-0.034	5.86	0.11
250	40.074	40.020	0.16	0.16	1.26	74	3.11	1.00	74	2.3	70	0.100	97	98	1.7	0	390	327	357	384	391	370	650	210	64	51	63	52	62	-0.034	5.89	0.11
251	40.234	40.180	0.16	0.16	1.27	74	3.1	1.00	74	2.3	70	0.097	99	99	1.7	0	389	327	357	383	391	369	660	210	64	51	63	52	62	-0.034	5.89	0.11
252	40.394	40.340	0.16	0.16	1.27	74	3.1	1.00	74	2.3	70	0.099	98	98	1.7	0	388	327	357	382	390	369	633	209	64	51	63	52	62	-0.033	5.93	0.11
253	40.556	40.502	0.16	0.16	1.26	74	3.09	1.00	74	2.3	71	0.097	100	100	1.7	0	386	327	356	381	390	368	622	208	64	51	63	52	63	-0.033	5.91	0.11
254	40.716	40.662	0.16	0.16	1.26	74	3.09	1.00	74	2.3	70	0.099	98	98	1.7	0	385	328	356	380	389	368	617	208	64	51	63	52	62	-0.034	6	0.11
255	40.876	40.822	0.16	0.16	1.27	74	3.09	1.00	74	2.3	70	0.098	98	98	1.7	0	384	328	356	379	389	367	620	208	64	51	63	52	62	-0.033	6.02	0.1
256	41.036	40.983	0.16	0.16	1.27	74	3.1	1.00	74	2.3	70	0.095	100	100	1.6	-0.1	382	328	356	378	389	367	623	207	64	51	63	52	62	-0.033	6.02	0.1
257	41.196	41.144	0.16	0.16	1.27	74	3.11	0.99	74	2.3	71	0.096	99	100	1.6	0	381	328	357	377	388	366	610	206	64	51	63	52	62	-0.032	6.01	0.1
258	41.357	41.304	0.16	0.16	1.26	74	3.1	1.00	74	2.3	71	0.087	105	104	1.6	0	380	329	356	376	388	366	605	206	64	51	63	52	62	-0.033	6.09	0.11
259	41.518	41.464	0.16	0.16	1.26	74	3.1	1.00	74	2.3	70	0.100	98	97	1.6	0	379	328	357	375	388	365	604	206	64	51	63	52	62	-0.033	6.09	0.1
260	41.677	41.626	0.16	0.16	1.26	74	3.09	1.00	74	2.3	71	0.099	97	99	1.6	0	378	328	357	375	387	365	601	205	64	51	63	52	62	-0.033	6.16	0.1

Wood Heater Test Data

u

Run: 3

Manufacturer: Kuma Stoves
Model: K-251
Tracking No.: 2464
Project No.: 0123WM014E
Test Date: 17-Apr-23
Beginning Clock Time: 11:49

Total Sampling Time: 368 min
Recording Interval: 1 min
Tunnel Diameter: 6
Background Sample Volume: 68.403 cubic feet

PM Control Modules: 335, 336
Dilution Tunnel MW(dry): 29.00 lb/lb-mole
Dilution Tunnel MW(wet): 28.78 lb/lb-mole
Dilution Tunnel H2O: 2.00 percent
Dilution Tunnel Static: -0.310 "H2O
Tunnel Area: 0.19635 ft2
Pitot Tube Cp: 0.99

Avg. Tunnel Velocity: 17.83 ft/sec.
Initial Tunnel Flow: 203.7 scfm
Average Tunnel Flow: 202.2 scfm
Post-Test Leak Check (1st Hr): 0.000 cfm @ 4 in. Hg
Post-Test Leak Check (1): 0.000 cfm @ 4 in. Hg
Post-Test Leak Check (2): 0.000 cfm @ 4 in. Hg
Average Test Piece Fuel Moisture: 20.72 Dry Basis %

Technician Signature:_____

Export to PDF

Meter Box Y Factor: 1.004 (1) 1.002 (2) 1.012 (Amb)

Barometric Pressure:	Begin	Middle	End	Average
	29.76	29.75	29.72	29.74

Room Air Velocity, fpn
0

OMNI Equipment Numbers: _____

Velocity Traverse Data

	Pt.1	Pt.2	Pt.3	Pt.4	Pt.5	Pt.6	Pt.7	Pt.8	Center	
Initial dP	0.070	0.072	0.082	0.064	0.058	0.086	0.084	0.068	0.098	"H2O
Temp:	78	78	78	78	78	78	78	78	78	°F

V_{strav} 18.09 ft/sec V_{scent} 21.01 ft/sec F_p 0.861

qwq

	Particulate Sampling Data														Fuel Weight (lb)		Temperature Data (°F)													Stack Gas Data		
Elapsed Time (min)	Gas Meter 1 (ft^3)	Gas Meter 2 (ft^3)	Sample Rate 1 (cfm)	Sample Rate 2 (cfm)	Orifice dH 1 ("H_2O)	Meter 1 Temp (°F)	Meter 1 Vacuum ("Hg)	Orifice dH 2 ("H_2O)	Meter 2 Temp (°F)	Meter 2 Vacuum ("Hg)	Dilution Tunnel (°F)	Dilution Tunnel Center dP	Pro. Rate 1	Pro. Rate 2	Scale Reading	Weight Change	Firebox Top	Firebox Bottom	Firebox Back	Firebox Left	Firebox Right	Avg. Stove Surface (Tot = ΔT)	Catalyst Exit	Stack	Filter 1	Dryer Exit 1	Filter 2	Dryer Exit 2	Ambient	Draft ("H_2O)	CO_2 (%)	CO (%)
261	41.837	41.786	0.16	0.16	1.27	74	3.1	1.00	74	2.3	71	0.098	98	98	1.6	0	377	325	357	374	387	364	599	205	64	51	63	52	62	-0.033	6.03	0.09
262	41.998	41.946	0.16	0.16	1.27	74	3.09	1.00	74	2.3	70	0.101	97	97	1.6	0	376	326	357	373	387	364	601	205	64	51	63	52	62	-0.033	5.74	0.09
263	42.159	42.107	0.16	0.16	1.26	74	3.1	1.00	74	2.3	70	0.097	99	99	1.5	-0.1	374	327	357	372	387	363	598	205	64	51	63	52	62	-0.033	5.66	0.09
264	42.319	42.267	0.16	0.16	1.26	74	3.1	0.99	74	2.3	70	0.099	98	98	1.5	0	373	328	357	371	387	363	596	204	64	51	63	52	62	-0.033	5.66	0.09
265	42.479	42.427	0.16	0.16	1.26	74	3.1	1.00	74	2.3	70	0.097	99	99	1.5	0	371	328	356	370	387	362	592	204	64	51	63	52	62	-0.032	5.64	0.09
266	42.639	42.589	0.16	0.16	1.27	74	3.1	1.00	74	2.3	70	0.100	97	98	1.5	0	370	329	356	369	387	362	589	203	64	51	63	52	62	-0.032	5.69	0.09
267	42.799	42.749	0.16	0.16	1.27	74	3.09	0.99	74	2.3	70	0.098	98	98	1.5	0	369	329	355	368	387	362	587	203	64	51	63	52	62	-0.032	5.72	0.09
268	42.960	42.909	0.16	0.16	1.27	74	3.1	1.00	74	2.3	70	0.101	97	97	1.5	0	367	329	356	367	387	361	585	203	64	51	63	52	62	-0.032	5.82	0.09
269	43.120	43.070	0.16	0.16	1.26	74	3.09	1.00	74	2.3	70	0.092	101	102	1.5	0	366	330	355	366	387	361	584	202	64	51	63	52	62	-0.032	5.91	0.09
270	43.280	43.231	0.16	0.16	1.26	74	3.11	1.00	74	2.3	71	0.099	98	98	1.4	-0.1	365	330	355	365	388	361	583	201	64	51	63	52	62	-0.032	5.86	0.09
271	43.440	43.391	0.16	0.16	1.27	74	3.11	1.00	74	2.3	70	0.099	98	98	1.4	0	364	330	354	364	388	360	583	201	64	51	63	52	62	-0.032	5.93	0.09
272	43.601	43.552	0.16	0.16	1.26	74	3.1	0.99	74	2.3	70	0.100	98	98	1.4	0	364	331	353	363	388	360	583	201	64	51	63	52	62	-0.032	5.93	0.09
273	43.762	43.713	0.16	0.16	1.27	74	3.1	0.99	74	2.3	70	0.098	99	99	1.4	0	363	331	353	362	389	360	582	201	64	51	63	52	62	-0.032	5.9	0.09
274	43.922	43.873	0.16	0.16	1.26	74	3.11	0.99	74	2.3	70	0.096	99	99	1.4	0	362	332	352	361	389	359	581	200	64	51	63	52	62	-0.032	5.86	0.09
275	44.082	44.033	0.16	0.16	1.26	74	3.1	0.99	74	2.3	70	0.098	98	98	1.4	0	361	332	353	361	389	359	579	200	64	51	63	52	62	-0.032	5.93	0.08
276	44.242	44.195	0.16	0.16	1.26	74	3.1	0.99	74	2.3	70	0.101	97	98	1.4	0	360	333	352	360	390	359	578	199	64	51	63	52	62	-0.032	5.93	0.09
277	44.403	44.355	0.16	0.16	1.27	74	3.1	1.00	74	2.3	70	0.098	99	98	1.4	0	359	334	352	359	390	359	577	199	64	51	63	52	62	-0.032	5.94	0.08
278	44.564	44.515	0.16	0.16	1.27	74	3.09	1.00	74	2.3	70	0.098	99	98	1.3	-0.1	358	335	352	358	391	359	575	198	64	51	63	52	62	-0.032	5.87	0.08
279	44.724	44.676	0.16	0.16	1.26	74	3.1	1.00	74	2.3	70	0.096	99	100	1.3	0	356	335	351	357	391	358	572	198	64	51	63	52	62	-0.031	5.81	0.08
280	44.884	44.837	0.16	0.16	1.26	74	3.1	1.00	74	2.3	70	0.098	98	99	1.3	0	355	336	351	356	391	358	568	198	64	51	63	52	62	-0.031	5.84	0.07
281	45.044	44.997	0.16	0.16	1.27	74	3.09	1.00	74	2.3	70	0.098	98	98	1.3	0	353	336	351	355	391	357	565	197	64	51	63	52	62	-0.031	5.83	0.07
282	45.205	45.157	0.16	0.16	1.26	74	3.09	1.00	74	2.3	70	0.097	99	99	1.3	0	352	336	352	355	392	357	563	196	64	51	63	52	62	-0.031	5.9	0.07
283	45.365	45.318	0.16	0.16	1.26	74	3.09	1.00	74	2.3	69	0.097	99	99	1.3	0	351	336	352	354	392	357	561	196	64	51	63	52	62	-0.031	5.88	0.07
284	45.525	45.478	0.16	0.16	1.26	74	3.09	1.00	74	2.3	69	0.098	98	98	1.3	0	350	337	353	353	392	357	625	196	64	51	63	52	62	-0.031	5.9	0.08
285	45.685	45.639	0.16	0.16	1.26	74	3.11	1.00	74	2.3	69	0.099	98	98	1.2	-0.1	349	338	354	352	392	357	624	195	64	51	63	52	62	-0.031	5.91	0.08
286	45.845	45.800	0.16	0.16	1.26	74	3.1	1.00	74	2.3	70	0.097	99	99	1.2	0	349	338	355	352	392	357	623	195	64	51	63	52	62	-0.031	5.89	0.08
287	46.006	45.960	0.16	0.16	1.26	74	3.11	0.99	74	2.3	70	0.096	100	99	1.2	0	348	338	356	351	392	357	623	194	64	51	63	52	62	-0.031	5.91	0.08
288	46.167	46.121	0.16	0.16	1.26	74	3.11	1.00	74	2.3	70	0.096	100	100	1.2	0	347	339	356	350	391	357	622	194	64	51	63	52	62	-0.031	5.86	0.08
289	46.327	46.282	0.16	0.16	1.26	74	3.1	1.00	74	2.3	70	0.091	102	103	1.2	0	347	339	358	350	391	357	622	194	64	51	63	52	62	-0.031	5.84	0.08
290	46.487	46.442	0.16	0.16	1.26	74	3.1	1.00	74	2.3	70	0.096	99	99	1.2	0	346	339	358	349	391	357	621	194	64	51	63	52	62	-0.031	5.87	0.08
291	46.647	46.603	0.16	0.16	1.26	74	3.1	0.99	74	2.3	69	0.099	98	98	1.2	0	346	340	358	349	390	357	620	194	64	51	63	52	62	-0.031	5.82	0.08
292	46.808	46.763	0.16	0.16	1.27	75	3.1	1.00	74	2.3	69	0.087	105	104	1.1	-0.1	345	340	359	348	390	356	620	194	64	51	63	52	62	-0.031	5.98	0.08
293	46.969	46.924	0.16	0.16	1.27	74	3.09	1.00	74	2.3	69	0.090	103	103	1.1	0	344	340	360	347	390	356	620	193	64	51	63	52	62	-0.030	6.05	0.08
294	47.128	47.085	0.16	0.16	1.26	75	3.09	1.00	74	2.3	70	0.097	98	99	1.1	0	344	341	360	347	389	356	620	194	64	51	63	52	63	-0.030	6.08	0.09
295	47.288	47.245	0.16	0.16	1.26	74	3.1	1.00	74	2.3	70	0.096	99	99	1.1	0	344	341	360	346	389	356	620	194	64	51	63	52	62	-0.031	6.07	0.09
296	47.449	47.406	0.16	0.16	1.26	75	3.09	0.99	74	2.3	70	0.097	99	99	1.1	0	344	341	361	346	388	356	621	193	64	51	63	52	62	-0.031	6	0.08
297	47.610	47.566	0.16	0.16	1.26	74	3.11	0.99	74	2.3	70	0.091	103	102	1.1	0	344	342	361	345	388	356	621	194	64	51	63	52	62	-0.031	6.04	0.09
298	47.770	47.727	0.16	0.16	1.26	75	3.1	1.00	74	2.3	69	0.090	102	103	1.1	0	344	342	362	344	388	356	621	194	64	51	63	52	62	-0.031	6.01	0.08
299	47.930	47.888	0.16	0.16	1.26	75	3.1	1.00	74	2.3	70	0.095	100	100	1.0	-0.1	344	342	362	344	387	356	621	193	64	51	63	52	62	-0.030	6.2	0.08
300	48.091	48.049	0.16	0.16	1.26	75	3.1	1.00	74	2.3	69	0.096	100	100	1.0	0	343	342	363	344	387	356	621	194	64	51	63	52	62	-0.031	6.11	0.09
301	48.251	48.209	0.16	0.16	1.27	74	3.1	1.00	74	2.3	69	0.088	103	104	1.0	0	344	343	363	343	386	356	623	194	64	51	63	52	62	-0.031	5.99	0.1
302	48.412	48.369	0.16	0.16	1.26	75	3.1	1.00	75	2.3	69	0.092	102	101	1.0	0	344	343	363	343	386	356	626	194	64	51	63	52	62	-0.031	6.04	0.11
303	48.573	48.531	0.16	0.16	1.26	75	3.11	1.00	74	2.3	70	0.098	99	99	1.0	0	346	343	363	342	385	356	630	195	64	51	63	52	62	-0.031	6.1	0.11
304	48.733	48.691	0.16	0.16	1.26	74	3.11	1.00	74	2.3	70	0.098	98	98	1.0	0	347	343	364	342	385	356	634	195	64	51	63	52	62	-0.031	6.22	0.11

Wood Heater Test Data

u

Run: 3

Manufacturer: Kuma Stoves
Model: K-251
Tracking No.: 2464
Project No.: 0123WM014E
Test Date: 17-Apr-23
Beginning Clock Time: 11:49

Total Sampling Time: 368 min
Recording Interval: 1 min
Tunnel Diameter: 6
Background Sample Volume: 68.403 cubic feet

PM Control Modules: 335, 336
Dilution Tunnel MW(dry): 29.00 lb/lb-mole
Dilution Tunnel MW(wet): 28.78 lb/lb-mole
Dilution Tunnel H2O: 2.00 percent
Dilution Tunnel Static: -0.310 "H2O
Tunnel Area: 0.19635 ft2
Pitot Tube Cp: 0.99

Avg. Tunnel Velocity: 17.83 ft/sec.
Initial Tunnel Flow: 203.7 scfm
Average Tunnel Flow: 202.2 scfm
Post-Test Leak Check (1st Hr): 0.000 cfm @ 4 in. Hg
Post-Test Leak Check (1): 0.000 cfm @ 4 in. Hg
Post-Test Leak Check (2): 0.000 cfm @ 4 in. Hg
Average Test Piece Fuel Moisture: 20.72 Dry Basis %

Technician Signature:_____

Export to PDF

Meter Box Y Factor: 1.004 (1) 1.002 (2) 1.012 (Amb)

Barometric Pressure:	Begin	Middle	End	Average
	29.76	29.75	29.72	29.74

Room Air Velocity, fpn
0

OMNI Equipment Numbers: _____

Velocity Traverse Data

	Pt.1	Pt.2	Pt.3	Pt.4	Pt.5	Pt.6	Pt.7	Pt.8	Center	
Initial dP	0.070	0.072	0.082	0.064	0.058	0.086	0.084	0.068	0.098	"H2O
Temp:	78	78	78	78	78	78	78	78	78	°F

V_{strav} 18.09 ft/sec V_{scent} 21.01 ft/sec F_p 0.861

qwq

	Particulate Sampling Data														Fuel Weight (lb)		Temperature Data (°F)													Stack Gas Data		
Elapsed Time (min)	Gas Meter 1 (ft^3)	Gas Meter 2 (ft^3)	Sample Rate 1 (cfm)	Sample Rate 2 (cfm)	Orifice dH 1 ("H_2O)	Meter 1 Temp (°F)	Meter 1 Vacuum ("Hg)	Orifice dH 2 ("H_2O)	Meter 2 Temp (°F)	Meter 2 Vacuum ("Hg)	Dilution Tunnel (°F)	Dilution Tunnel Center dP	Pro. Rate 1	Pro. Rate 2	Scale Reading	Weight Change	Firebox Top	Firebox Bottom	Firebox Back	Firebox Left	Firebox Right	Avg. Stove Surface (Tot = ΔT)	Catalyst Exit	Stack	Filter 1	Dryer Exit 1	Filter 2	Dryer Exit 2	Ambient	Draft ("H_2O)	CO_2 (%)	CO (%)
305	48.893	48.852	0.16	0.16	1.26	74	3.11	1.00	74	2.3	70	0.096	99	100	1.0	0	348	343	364	342	385	356	637	196	64	51	63	52	62	-0.032	6.33	0.11
306	49.053	49.013	0.16	0.16	1.26	75	3.11	1.00	74	2.3	69	0.095	99	100	0.9	-0.1	349	343	365	341	384	356	639	197	64	51	63	52	62	-0.032	6.33	0.11
307	49.214	49.173	0.16	0.16	1.27	75	3.09	0.99	74	2.3	69	0.095	100	100	0.9	0	349	343	365	341	384	356	641	197	64	51	63	52	62	-0.032	6.37	0.11
308	49.375	49.333	0.16	0.16	1.26	75	3.11	1.00	74	2.3	69	0.097	99	99	0.9	0	350	343	365	341	384	357	642	197	64	51	63	52	62	-0.032	6.33	0.09
309	49.535	49.495	0.16	0.16	1.26	75	3.09	1.00	74	2.3	69	0.095	99	101	0.9	0	350	343	365	340	383	356	642	197	64	51	63	52	62	-0.032	6.35	0.09
310	49.695	49.655	0.16	0.16	1.27	75	3.1	1.00	74	2.3	69	0.084	106	106	0.9	0	351	343	366	340	383	357	641	197	64	51	63	52	62	-0.031	6.26	0.09
311	49.856	49.816	0.16	0.16	1.27	75	3.09	1.00	74	2.3	69	0.093	101	101	0.9	0	351	343	365	340	383	356	640	197	64	51	63	52	62	-0.032	6.23	0.09
312	50.017	49.976	0.16	0.16	1.27	75	3.09	1.00	74	2.3	69	0.099	98	98	0.8	-0.1	351	343	366	339	383	356	639	197	64	51	63	52	62	-0.031	6.16	0.09
313	50.177	50.138	0.16	0.16	1.27	74	3.11	1.00	74	2.3	70	0.098	98	99	0.8	0	350	343	365	339	383	356	639	196	64	51	63	52	62	-0.031	6.14	0.09
314	50.338	50.298	0.16	0.16	1.27	75	3.11	1.00	74	2.3	70	0.100	98	97	0.8	0	350	343	365	339	383	356	638	196	64	51	63	52	62	-0.032	6.16	0.09
315	50.498	50.459	0.16	0.16	1.27	74	3.11	0.99	74	2.3	69	0.094	100	101	0.8	0	350	343	365	339	383	356	638	196	64	51	63	52	62	-0.032	6.05	0.09
316	50.658	50.620	0.16	0.16	1.27	74	3.11	0.99	74	2.3	69	0.091	102	102	0.8	0	350	343	365	338	382	356	638	197	64	51	63	52	62	-0.032	6.03	0.09
317	50.819	50.780	0.16	0.16	1.27	74	3.11	0.99	74	2.3	69	0.100	98	97	0.8	0	350	343	364	338	382	355	639	197	64	51	63	52	62	-0.033	5.98	0.1
318	50.980	50.940	0.16	0.16	1.27	74	3.09	1.00	74	2.3	69	0.096	100	99	0.7	-0.1	350	341	364	338	382	355	639	197	64	51	63	52	62	-0.032	6.01	0.1
319	51.141	51.102	0.16	0.16	1.26	74	3.09	1.00	74	2.3	69	0.097	99	100	0.7	0	350	342	364	337	381	355	640	197	64	51	63	52	62	-0.032	6	0.1
320	51.301	51.263	0.16	0.16	1.26	74	3.11	0.99	74	2.3	69	0.097	99	99	0.7	0	351	342	364	337	381	355	640	197	64	51	63	52	62	-0.032	5.97	0.1
321	51.461	51.423	0.16	0.16	1.27	74	3.11	1.00	74	2.3	69	0.095	100	100	0.7	0	351	343	362	337	381	355	640	197	64	51	63	52	62	-0.032	5.95	0.09
322	51.622	51.583	0.16	0.16	1.27	75	3.09	1.00	75	2.3	69	0.096	100	99	0.7	0	351	343	363	336	381	355	640	197	64	51	63	52	62	-0.032	5.93	0.1
323	51.783	51.745	0.16	0.16	1.27	75	3.11	0.99	75	2.3	69	0.094	101	101	0.7	0	351	343	362	336	381	355	640	197	64	51	63	52	62	-0.032	5.95	0.1
324	51.943	51.905	0.16	0.16	1.26	75	3.09	1.00	75	2.3	69	0.096	99	99	0.7	0	351	343	362	336	380	354	640	198	64	51	63	52	62	-0.032	5.94	0.09
325	52.103	52.066	0.16	0.16	1.27	75	3.1	1.00	75	2.3	69	0.095	99	100	0.7	0	351	343	362	335	380	354	639	197	64	51	63	52	62	-0.032	5.92	0.09
326	52.263	52.227	0.16	0.16	1.26	75	3.09	0.99	75	2.3	69	0.091	102	102	0.6	-0.1	351	343	362	335	380	354	639	197	64	51	63	52	62	-0.032	5.9	0.09
327	52.424	52.387	0.16	0.16	1.27	75	3.11	0.99	75	2.3	69	0.092	102	101	0.6	0	350	342	362	335	380	354	638	197	64	51	63	52	62	-0.032	5.93	0.09
328	52.585	52.547	0.16	0.16	1.26	75	3.11	1.00	75	2.3	69	0.094	101	100	0.6	0	350	342	361	334	380	353	637	197	64	51	63	52	62	-0.032	5.94	0.09
329	52.745	52.709	0.16	0.16	1.26	75	3.1	1.00	75	2.3	69	0.098	98	99	0.6	0	350	341	361	334	380	353	636	197	64	51	63	52	63	-0.032	5.91	0.09
330	52.905	52.870	0.16	0.16	1.26	75	3.1	0.99	75	2.3	70	0.097	98	99	0.6	0	350	341	361	333	380	353	635	196	64	51	63	52	63	-0.032	5.94	0.09
331	53.065	53.030	0.16	0.16	1.27	75	3.1	1.00	75	2.3	69	0.100	97	97	0.6	0	349	340	361	333	381	353	635	197	64	51	63	52	62	-0.032	5.9	0.09
332	53.226	53.190	0.16	0.16	1.26	75	3.09	1.00	75	2.3	70	0.095	100	100	0.6	0	349	340	360	332	381	352	634	196	64	51	63	52	62	-0.031	5.93	0.09
333	53.387	53.352	0.16	0.16	1.26	75	3.11	1.00	75	2.3	70	0.096	100	100	0.5	-0.1	349	339	360	332	381	352	633	196	64	51	63	52	62	-0.032	5.93	0.09
334	53.547	53.512	0.16	0.16	1.26	75	3.1	1.00	75	2.3	70	0.090	102	102	0.5	0	348	339	360	332	381	352	632	196	64	51	63	52	62	-0.032	5.86	0.09
335	53.707	53.672	0.16	0.16	1.26	75	3.1	1.00	75	2.3	70	0.099	97	98	0.5	0	348	339	360	331	381	352	632	196	64	51	63	52	62	-0.031	5.82	0.09
336	53.867	53.834	0.16	0.16	1.26	75	3.09	1.00	74	2.3	70	0.098	98	99	0.5	0	348	339	359	331	382	352	631	196	64	51	63	52	62	-0.032	5.79	0.09
337	54.028	53.994	0.16	0.16	1.27	75	3.1	0.99	75	2.3	69	0.093	101	101	0.5	0	347	339	359	330	382	351	631	196	64	51	64	52	63	-0.032	5.76	0.09
338	54.189	54.154	0.16	0.16	1.26	75	3.09	1.00	75	2.3	70	0.096	100	99	0.5	0	347	339	358	330	382	351	631	196	64	51	64	52	62	-0.031	5.78	0.09
339	54.349	54.315	0.16	0.16	1.26	75	3.09	1.00	75	2.3	69	0.093	100	101	0.5	0	347	339	358	329	382	351	631	196	64	51	63	52	62	-0.032	5.76	0.09
340	54.509	54.476	0.16	0.16	1.26	75	3.1	0.99	75	2.3	69	0.092	101	102	0.4	-0.1	347	339	358	329	382	351	631	196	64	51	64	52	62	-0.032	5.73	0.09
341	54.669	54.636	0.16	0.16	1.26	75	3.09	1.00	75	2.3	69	0.097	98	98	0.4	0	346	339	357	329	382	351	630	196	64	51	64	52	62	-0.032	5.75	0.08
342	54.830	54.797	0.16	0.16	1.26	75	3.1	1.00	75	2.3	69	0.090	103	103	0.4	0	346	339	357	328	383	351	629	196	64	51	64	52	62	-0.031	5.77	0.09
343	54.991	54.958	0.16	0.16	1.26	75	3.1	0.99	75	2.3	70	0.099	98	98	0.4	0	346	339	357	328	383	351	628	195	64	51	63	52	62	-0.031	5.92	0.09
344	55.151	55.118	0.16	0.16	1.25	75	3.1	0.99	75	2.3	70	0.098	98	98	0.4	0	345	338	356	327	383	350	627	195	64	51	64	52	62	-0.031	5.88	0.08
345	55.311	55.279	0.16	0.16	1.26	75	3.1	1.00	75	2.3	70	0.100	97	98	0.4	0	344	338	356	327	383	350	626	194	64	51	64	52	62	-0.031	5.82	0.08
346	55.471	55.440	0.16	0.16	1.26	75	3.1	0.99	75	2.3	70	0.100	97	98	0.4	0	344	338	355	326	384	349	625	194	64	52	64	52	62	-0.032	5.75	0.08
347	55.632	55.600	0.16	0.16	1.27	75	3.1	1.00	75	2.3	70	0.098	99	98	0.3	-0.1	343	338	355	326	384	349	624	195	64	52	64	52	63	-0.031	5.72	0.08
348	55.793	55.761	0.16	0.16	1.26	75	3.1	1.00	75	2.3	70	0.092	102	102	0.3	0	343	338	355	325	384	349	623	194	64	52	64	52	62	-0.032	5.67	0.08

Wood Heater Test Data

u

Run: 3

Manufacturer: Kuma Stoves
Model: K-251
Tracking No.: 2464
Project No.: 0123WM014E
Test Date: 17-Apr-23
Beginning Clock Time: 11:49

Total Sampling Time: 368 min
Recording Interval: 1 min
Tunnel Diameter: 6
Background Sample Volume: 68.403 cubic feet

PM Control Modules: 335, 336
Dilution Tunnel MW(dry): 29.00 lb/lb-mole
Dilution Tunnel MW(wet): 28.78 lb/lb-mole
Dilution Tunnel H2O: 2.00 percent
Dilution Tunnel Static: -0.310 "H2O
Tunnel Area: 0.19635 ft2
Pitot Tube Cp: 0.99

Avg. Tunnel Velocity: 17.83 ft/sec.
Initial Tunnel Flow: 203.7 scfm
Average Tunnel Flow: 202.2 scfm
Post-Test Leak Check (1st Hr): 0.000 cfm @ 4 in. Hg
Post-Test Leak Check (1): 0.000 cfm @ 4 in. Hg
Post-Test Leak Check (2): 0.000 cfm @ 4 in. Hg
Average Test Piece Fuel Moisture: 20.72 Dry Basis %

Technician Signature:_____

Meter Box Y Factor: 1.004 (1) 1.002 (2) 1.012 (Amb)

Barometric Pressure:

Begin	Middle	End	Average
29.76	29.75	29.72	29.74

Room Air Velocity, fpn
0

OMNI Equipment Numbers: _____

Velocity Traverse Data

	Pt.1	Pt.2	Pt.3	Pt.4	Pt.5	Pt.6	Pt.7	Pt.8	Center	
Initial dP	0.070	0.072	0.082	0.064	0.058	0.086	0.084	0.068	0.098	"H2O
Temp:	78	78	78	78	78	78	78	78	78	°F

V_{strav} 18.09 ft/sec V_{scent} 21.01 ft/sec F_p 0.861

qwq

	Particulate Sampling Data														Fuel Weight (lb)		Temperature Data (°F)													Stack Gas Data		
Elapsed Time (min)	Gas Meter 1 (ft^3)	Gas Meter 2 (ft^3)	Sample Rate 1 (cfm)	Sample Rate 2 (cfm)	Orifice dH 1 ("H_2O)	Meter 1 Temp (°F)	Meter 1 Vacuum ("Hg)	Orifice dH 2 ("H_2O)	Meter 2 Temp (°F)	Meter 2 Vacuum ("Hg)	Dilution Tunnel (°F)	Dilution Tunnel Center dP	Pro. Rate 1	Pro. Rate 2	Scale Reading	Weight Change	Firebox Top	Firebox Bottom	Firebox Back	Firebox Left	Firebox Right	Avg. Stove Surface (Tot = ΔT)	Catalyst Exit	Stack	Filter 1	Dryer Exit 1	Filter 2	Dryer Exit 2	Ambient	Draft ("H_2O)	CO_2 (%)	CO (%)
349	55.953	55.922	0.16	0.16	1.26	75	3.1	0.99	75	2.3	70	0.092	101	102	0.3	0	342	338	354	325	384	349	622	194	64	52	64	52	62	-0.031	5.64	0.08
350	56.113	56.083	0.16	0.16	1.26	75	3.09	0.99	75	2.3	70	0.097	98	99	0.3	0	342	337	353	324	384	348	621	194	64	52	64	52	62	-0.031	5.9	0.07
351	56.273	56.243	0.16	0.16	1.27	75	3.09	1.00	75	2.3	69	0.090	102	102	0.3	0	341	337	353	324	385	348	618	193	64	52	64	52	62	-0.031	6.04	0.07
352	56.434	56.403	0.16	0.16	1.26	75	3.09	1.00	75	2.3	69	0.095	100	99	0.3	0	340	337	353	324	385	348	616	194	64	52	64	52	62	-0.031	6.04	0.07
353	56.595	56.565	0.16	0.16	1.27	75	3.1	1.00	75	2.3	69	0.099	98	99	0.3	0	339	337	352	324	385	347	615	194	64	52	64	52	62	-0.032	5.98	0.07
354	56.755	56.725	0.16	0.16	1.26	75	3.09	1.00	75	2.3	69	0.096	99	99	0.2	-0.1	339	337	352	323	385	347	613	193	64	52	64	52	62	-0.031	5.96	0.07
355	56.915	56.885	0.16	0.16	1.26	75	3.1	1.00	75	2.3	69	0.096	99	99	0.2	0	338	337	351	323	385	347	565	193	64	52	64	52	62	-0.032	5.98	0.07
356	57.076	57.047	0.16	0.16	1.26	75	3.1	1.00	75	2.3	70	0.095	100	101	0.2	0	338	337	352	322	385	347	563	192	64	52	64	52	62	-0.030	6.01	0.07
357	57.236	57.207	0.16	0.16	1.27	75	3.09	0.99	75	2.3	70	0.093	101	101	0.2	0	338	337	351	322	385	347	612	192	64	52	64	52	62	-0.031	6.12	0.07
358	57.397	57.367	0.16	0.16	1.27	75	3.1	1.00	75	2.3	69	0.097	99	98	0.2	0	337	337	350	322	385	346	611	192	64	52	64	52	62	-0.031	6.08	0.07
359	57.557	57.528	0.16	0.16	1.26	75	3.11	0.99	75	2.3	69	0.097	98	99	0.2	0	336	337	351	322	385	346	610	192	64	52	64	52	62	-0.031	6.08	0.07
360	57.717	57.689	0.16	0.16	1.26	75	3.11	0.99	75	2.3	69	0.093	100	101	0.2	0	336	338	350	321	385	346	610	192	64	52	64	52	62	-0.031	6.03	0.07
361	57.878	57.850	0.16	0.16	1.26	75	3.1	0.99	75	2.3	70	0.098	99	99	0.1	-0.1	336	338	350	321	385	346	610	191	64	52	64	52	62	-0.031	6.03	0.07
362	58.038	58.010	0.16	0.16	1.27	75	3.09	0.99	75	2.3	69	0.093	100	101	0.1	0	336	338	350	321	385	346	610	191	64	52	64	53	62	-0.031	6.03	0.07
363	58.200	58.172	0.16	0.16	1.26	75	3.11	0.99	75	2.3	69	0.089	104	104	0.1	0	336	338	350	321	385	346	610	191	64	52	64	53	62	-0.031	5.97	0.07
364	58.360	58.332	0.16	0.16	1.26	75	3.11	0.99	75	2.3	69	0.093	100	101	0.1	0	335	338	349	321	385	346	610	192	64	52	64	52	62	-0.031	5.91	0.07
365	58.520	58.492	0.16	0.16	1.26	75	3.1	0.99	75	2.3	69	0.099	97	97	0.1	0	335	338	349	320	385	345	608	191	64	52	64	53	62	-0.031	5.84	0.06
366	58.680	58.654	0.16	0.16	1.26	75	3.1	0.99	75	2.3	69	0.094	100	101	0.1	0	334	338	349	320	385	345	606	191	64	52	64	53	62	-0.031	5.78	0.06
367	58.840	58.814	0.16	0.16	1.27	75	3.1	0.99	75	2.3	69	0.100	97	97	0.1	0	334	338	349	320	385	345	604	190	64	52	64	53	62	-0.032	5.75	0.06
368	59.002	58.974	0.16	0.16	1.27	75	3.1	1.00	75	2.3	70	0.092	102	101	0.0	-0.1	333	339	350	320	385	345	604	191	64	52	64	53	62	-0.031	5.73	0.06

Wood Heater Lab Data - ASTM E2780 / ASTM E2515

Manufacturer: Kuma Stoves
Model: K-251
Tracking No.: 2464
Project No.: 0123WM014E
Run #: 3
Date: 4/17/23

Equipment Numbers:

TRAIN 1 (First Hour emissions)

Sample Component	Reagent	Filter, Probe or Dish #	Weights		
			Final, mg	Tare, mg	Particulate, mg
B. Front filter catch	Filter	E875	121.2	118.7	2.5
C. Rear filter catch	Filter	E876	117.8	118.2	-0.4
D. Probe catch*	Probe	33	113943.2	113943.0	0.2
E. Filter seals catch*	Seals	S475	3315.9	3315.4	0.5

Sub-Total Total Particulate, mg: 2.8

TRAIN 1 (Post First Hour Change-out)

Sample Component	Reagent	Filter, Probe or Dish #	Weights		
			Final, mg	Tare, mg	Particulate, mg
B. Front filter catch	Filter	E877	122.0	118.5	3.5
C. Rear filter catch	Filter	E878	118.2	118.0	0.2
D. Probe catch*	Probe	58	117067.8	117067.7	0.1
E. Filter seals catch*	Seals	S476	3434.3	3434.0	0.3

Sub-Total Total Particulate, mg: 4.1

Train 1 Aggregate Total Particulate, mg: **6.9**

TRAIN 2

Sample Component	Reagent	Filter, Probe or Dish #	Weights		
			Final, mg	Tare, mg	Particulate, mg
A. Front filter catch	Filter	E879	125.1	118.8	6.3
B. Rear filter catch	Filter	E880	117.8	117.5	0.3
C. Probe catch*	Probe	79	118144.7	118144.6	0.1
D. Filter seals catch*	Seals	S477	3374.4	3373.9	0.5

Total Particulate, mg: **7.2**

AMBIENT

Sample Component	Reagent	Filter # or Probe #	Weights		
			Final, mg	Tare, mg	Particulate, mg
A. Front filter catch*	Filter	E881	118.3	118.2	0.1

Total Particulate, mg: **0.1**

*Particulate catch that results in a negative number, is assumed to be zero for probes and seals, negative numbers for filters are assumed to be part of the seal weight.

Component	Equations:
A. Front filter catch	Final (mg) - Tare (mg) = Particulate, mg
B. Rear filter catch	Final (mg) - Tare (mg) = Particulate, mg
C. Probe catch	Final (mg) - Tare (mg) = Particulate, mg

Technician Signature:_____

Wood Heater Test Results - ASTM E2780 / ASTM E2515

Manufacturer: Kuma Stoves
Model: K-251
Project No.: 0123WM014E
Tracking No.: 2464
Run: 3
Test Date: 04/17/23

Technician Signature:_____

Burn Rate	**1.06**	**kg/hr dry**
Average Tunnel Temperature	74	degrees Fahrenheit
Average Gas Velocity in Dilution Tunnel - vs	17.83	feet/second
Average Gas Flow Rate in Dilution Tunnel - Qsd	12130.7	dscf/hour
Average Delta p	0.096	inches H20
Total Time of Test	368	minutes

	AMBIENT		SAMPLE TRAIN 1		SAMPLE TRAIN 2		FIRST HOUR FILTER (TRAIN 1)	
Total Sample Volume - Vm	68.403	cubic feet	59.002	cubic feet	58.974	cubic feet	9.567	cubic feet
Average Gas Meter Temperature	62	degrees Fahrenheit	73	degrees Fahrenheit	73	degrees Fahrenheit	69	degrees Fahrenheit
Total Sample Volume (Standard Conditions) - Vmstd	69.608	dscf	58.474	dscf	58.281	dscf	9.554	dscf
Total Particulates - m_n	0.1	mg	6.9	mg	7.2	mg	2.8	mg
Particulate Concentration (dry-standard) - C_r/C_s	0.000001	grams/dscf	0.00012	grams/dscf	0.00012	grams/dscf	0.00029	grams/dscf
Total Particulate Emissions - E_T	0.11	grams	8.67	grams	9.08	grams	3.56	grams
Particulate Emission Rate	0.02	grams/hour	1.41	grams/hour	1.48	grams/hour	3.56	grams/hour
Emissions Factor			1.33	g/kg	1.40	g/kg	1.69	g/kg
Difference from Average Total Particulate Emissions			0.21	grams	0.21	grams		

Final Average Results		
Complete Test Run		
Total Particulate Emissions - E_T	8.88	grams
Particulate Emission Rate	**1.45**	**grams/hour**
Emissions Factor	1.37	grams/kg
First Hour Emissions		
Total Particulate Emissions - E_T	3.56	grams
Particulate Emission Rate	3.56	grams/hour
Emissions Factor	1.69	grams/kg
7.5% of Average Total Particulate Emissions	0.67	grams

Quality Checks	Requirement	Measured / Observed: First Hour	Train 1	Train 2	Complies?
Filter Temps, °F	< 90	65	65	64	OK
Filter Face Velocity, fpm	< 30	8.73	8.73	9.00	OK
Dryer Exit Temp, °F	< 80	51	52	53	OK
Leakage Rate, cfm < 4% of avg sample rate or < 0.01 cfm, lesser of the two	0.01	0.000	0.000	0.000	OK
Neg. Probe Weight	=> 0	0.2	0.1	0.1	OK
Pro-Rate Variation	< 90 for < 10% of θ	1.67%	0.27%	0.00%	OK
	> 110 for < 10% of θ	0.00%	0.00%	0.27%	OK
	# Readings < 80%	0	0	0	OK
	# Readings > 120%	0	0	0	OK
Ambient Temp, °F (min / max)	< 55	60			OK
	> 90	63			OK
Train Precision	(*A*) Within 7.5%	2.3%			OK
One of *A* or *B* must	(*B*) Within 0.5 g/kg	0.06			
Stove Surface ΔT	Within 125 °F	79			OK
Room Air Velocity	< 50 fpm	0			OK

Wood Heater Lab Data - ASTM E2780 / ASTM E2515

Manufacturer: Kuma Stoves
Model: K-251
Tracking No.: 2464
Project No.: 0123WM014E
Run #: 3
Date: 4/17/23

Equipment Numbers:

Uncorrected

TRAIN 1 (First Hour emissions)

Sample Component	Reagent	Filter, Probe or Dish #	Weights		
			Final, mg	Tare, mg	Particulate, mg
B. Front filter catch	Filter	E875	121.2	118.7	2.5
C. Rear filter catch	Filter	E876	117.8	118.2	0.0
D. Probe catch*	Probe	33	113943.2	113943.0	0.2
E. Filter seals catch*	Seals	S475	3315.9	3315.4	0.5

Sub-Total Total Particulate, mg: 3.2

TRAIN 1 (Post First Hour Change-out)

Sample Component	Reagent	Filter, Probe or Dish #	Weights		
			Final, mg	Tare, mg	Particulate, mg
B. Front filter catch	Filter	E877	122.0	118.5	3.5
C. Rear filter catch	Filter	E878	118.2	118.0	0.2
D. Probe catch*	Probe	58	117067.8	117067.7	0.1
E. Filter seals catch*	Seals	S476	3434.3	3434.0	0.3

Sub-Total Total Particulate, mg: 4.1

Train 1 Aggregate Total Particulate, mg: **7.3**

TRAIN 2

Sample Component	Reagent	Filter, Probe or Dish #	Weights		
			Final, mg	Tare, mg	Particulate, mg
A. Front filter catch	Filter	E879	125.1	118.8	6.3
B. Rear filter catch	Filter	E880	117.8	117.5	0.3
C. Probe catch*	Probe	79	118144.7	118144.6	0.1
D. Filter seals catch*	Seals	S477	3374.4	3373.9	0.5

Total Particulate, mg: **7.2**

AMBIENT

Sample Component	Reagent	Filter # or Probe #	Weights		
			Final, mg	Tare, mg	Particulate, mg
A. Front filter catch*	Filter	E881	118.3	118.2	0.1

Total Particulate, mg: **0.1**

*Particulate catch that results in a negative number, is assumed to be zero for probes and seals, negative numbers for filters are assumed to be part of the seal weight.

Component	Equations:
A. Front filter catch	Final (mg) - Tare (mg) = Particulate, mg
B. Rear filter catch	Final (mg) - Tare (mg) = Particulate, mg
C. Probe catch	Final (mg) - Tare (mg) = Particulate, mg

Technician Signature:_____

Wood Heater Test Results - ASTM E2780 / ASTM E2515

Manufacturer: Kuma Stoves
Model: K-251
Project No.: 0123WM014E
Tracking No.: 2464
Run: 3
Test Date: 04/17/23

Technician Signature:_____

Burn Rate	**1.06**	**kg/hr dry**
Average Tunnel Temperature	74	degrees Fahrenheit
Average Gas Velocity in Dilution Tunnel - vs	17.83	feet/second
Average Gas Flow Rate in Dilution Tunnel - Qsd	12130.7	dscf/hour
Average Delta p	0.096	inches H20
Total Time of Test	368	minutes

Uncorrected

	AMBIENT		SAMPLE TRAIN 1		SAMPLE TRAIN 2		FIRST HOUR FILTER (TRAIN 1)	
Total Sample Volume - Vm	68.403	cubic feet	59.002	cubic feet	58.974	cubic feet	9.567	cubic feet
Average Gas Meter Temperature	62	degrees Fahrenheit	73	degrees Fahrenheit	73	degrees Fahrenheit	69	degrees Fahrenheit
Total Sample Volume (Standard Conditions) - Vmstd	69.608	dscf	58.474	dscf	58.281	dscf	9.554	dscf
Total Particulates - m_n	0.1	mg	7.3	mg	7.2	mg	3.2	mg
Particulate Concentration (dry-standard) - C_r/C_s	0.000001	grams/dscf	0.00012	grams/dscf	0.00012	grams/dscf	0.00033	grams/dscf
Total Particulate Emissions - E_T	0.11	grams	9.18	grams	9.08	grams	4.06	grams
Particulate Emission Rate	0.02	grams/hour	1.50	grams/hour	1.48	grams/hour	4.06	grams/hour
Emissions Factor			1.41	g/kg	1.40	g/kg	1.93	g/kg
Difference from Average Total Particulate Emissions			0.05	grams	0.05	grams		

Final Average Results		
Complete Test Run		
Total Particulate Emissions - E_T	9.13	grams
Particulate Emission Rate	**1.49**	**grams/hour**
Emissions Factor	1.41	grams/kg
First Hour Emissions		
Total Particulate Emissions - E_T	4.06	grams
Particulate Emission Rate	4.06	grams/hour
Emissions Factor	1.93	grams/kg
7.5% of Average Total Particulate Emissions	0.68	grams

Quality Checks	Requirement	Measured / Observed: First Hour	Train 1	Train 2	Complies?
Filter Temps, °F	< 90	65	65	64	OK
Filter Face Velocity, fpm	< 30	8.73	8.73	9.00	OK
Dryer Exit Temp, °F	< 80	51	52	53	OK
Leakage Rate, cfm < 4% of avg sample rate or < 0.01 cfm, lesser of the two	0.01	0.000	0.000	0.000	OK
Neg. Probe Weight	=> 0	0.2	0.1	0.1	OK
Pro-Rate Variation	< 90 for < 10% of θ	1.67%	0.27%	0.00%	OK
	> 110 for < 10% of θ	0.00%	0.00%	0.27%	OK
	# Readings < 80%	0	0	0	OK
	# Readings > 120%	0	0	0	OK
Ambient Temp, °F (min / max)	< 55	60			OK
	> 90	63			OK
Train Precision One of *A* or *B* must	(*A*) Within 7.5%	0.5%			OK
	(*B*) Within 0.5 g/kg	0.01			
Stove Surface ΔT	Within 125 °F	79			OK
Room Air Velocity	< 50 fpm	0			OK

VERSION:	2.4	4/15/2010			
Manufacturer:	Kuma Stoves		Appliance Type:	Cat	(Cat, Non-Cat, Pellet)
Model:	K-251				
Date:	4/17/2023		Temp. Units	F	(F or C)
Run:	3		Weight Units	lb	(kg or lb)
Control #:	2464				
Test Duration:	368				
Output Category:	II		Fuel Data		
				D. Fir	
Wood Moisture (% wet):	17.17		HHV	19,810	kJ/kg
Load Weight (lb wet):	17.30		%C	48.73	
Burn Rate (dry kg/h):	1.06		%H	6.87	
Total Particulate Emissions:	8.88	g	%O	43.9	
			%Ash	0.5	

Default Fuel Values

	D. Fir	Oak
HHV (kJ/kg)	19,810	19,887
%C	48.73	50
%H	6.87	6.6
%O	43.9	42.9
%Ash	0.5	0.5

Note 1: For other fuels, use the heating value and fuel composition determined by analysis of fuel sample in accordance with Clause 9.2.

Note 2: In cases where the "Fuel Weight Remaining" is the same for three or more readings in a row, a "divide by zero error" will occur in the calculation sheet. In such cases, adjust the weight values by interpolation between the first occurence and the next reading showing a decrease in weight.

	Averages	0.20	7.84	#DIV/0!	258.43	61.78
					Temp. (ºF)	
Elapsed Time (min)	Fuel Weight Remaining (lb)	Flue Gas Composition (%) CO	CO_2	O_2	Flue Gas	Room Temp
0	17.30	0.21	2.94		422.0	62.0
1	17.20	0.15	2.76		418.0	62.0
2	17.10	0.35	4.56		342.0	63.0
3	17.00	0.08	4.25		312.0	61.0
4	17.00	0.06	4.78		299.0	62.0
5	16.90	0.06	5.17		292.0	62.0
6	16.90	0.06	5.04		289.0	62.0
7	16.80	0.05	5.42		289.0	62.0
8	16.80	0.05	5.43		286.0	62.0
9	16.70	0.05	5.64		286.0	62.0
10	16.60	0.06	6.39		286.0	62.0
11	16.60	0.06	6.06		287.0	62.0
12	16.50	0.06	6.43		288.0	62.0
13	16.40	0.07	6.42		290.0	62.0
14	16.30	0.07	6.39		291.0	61.0
15	16.30	0.08	6.32		293.0	62.0
16	16.20	0.09	6.50		295.0	62.0
17	16.10	0.08	7.23		298.0	61.0
18	16.00	0.08	7.36		299.0	62.0

19	15.90	0.08	7.37		303.0	61.0
20	15.80	0.07	7.19		305.0	61.0
21	15.80	0.06	7.13		307.0	61.0
22	15.70	0.07	6.95		308.0	61.0
23	15.60	0.06	7.12		309.0	61.0
24	15.50	0.06	7.08		311.0	61.0
25	15.40	0.07	6.83		312.0	61.0
26	15.30	0.07	6.78		312.0	61.0
27	15.20	0.07	6.96		313.0	62.0
28	15.20	0.07	7.74		314.0	62.0
29	15.10	0.06	8.33		315.0	61.0
30	15.00	0.06	8.81		316.0	61.0
31	14.80	0.06	8.24		318.0	61.0
32	14.80	0.06	8.07		318.0	61.0
33	14.70	0.06	7.98		317.0	61.0
34	14.60	0.05	8.24		317.0	61.0
35	14.50	0.05	8.88		316.0	61.0
36	14.40	0.05	9.01		315.0	61.0
37	14.30	0.06	9.26		316.0	61.0
38	14.20	0.07	9.39		318.0	61.0
39	14.10	0.07	9.26		319.0	62.0
40	14.00	0.08	9.40		320.0	61.0
41	13.90	0.08	9.46		321.0	61.0
42	13.80	0.09	9.54		323.0	61.0
43	13.70	0.08	9.83		324.0	61.0
44	13.50	0.08	9.88		326.0	61.0
45	13.40	0.09	10.00		327.0	61.0
46	13.30	0.09	10.24		328.0	61.0
47	13.20	0.09	10.15		330.0	61.0
48	13.10	0.12	10.54		332.0	61.0
49	13.00	0.13	10.89		334	61
50	12.90	0.21	11.24		336	61
51	12.80	0.18	11.39		336	61
52	12.70	0.12	11.35		337	60
53	12.50	0.21	11.53		337	61
54	12.40	0.15	11.51		337	61
55	12.30	0.12	11.31		338	61
56	12.20	0.14	11.18		336	61
57	12.10	0.21	11.33		338	61

58	12.00	0.2	11.51		339	61
59	11.80	0.24	11.72		340	62
60	11.70	0.3	11.81		341	61
61	11.60	0.53	11.96		343	62
62	11.40	0.59	12.23		346	61
63	11.30	0.75	12.1		348	61
64	11.20	1.24	11.91		350	61
65	11.10	1.16	11.92		354	62
66	10.90	1.3	12.01		357	62
67	10.80	1.48	11.99		361	61
68	10.70	1.73	12		364	62
69	10.50	1.95	11.96		366	62
70	10.40	2.22	11.88		371	62
71	10.30	1.41	12.35		373	61
72	10.10	1.9	12.36		372	61
73	10.00	1.6	12.46		370	61
74	9.90	2.21	12.38		371	62
75	9.70	2.67	12.26		371	61
76	9.60	2.61	12.22		372	61
77	9.40	2.46	12.28		372	61
78	9.30	2.26	12.3		371	62
79	9.10	2.05	12.3		370	62
80	9.00	1.75	12.31		368	61
81	8.90	1.51	12.38		367	61
82	8.70	1.2	12.41		366	62
83	8.60	0.88	12.37		363	62
84	8.50	0.76	12.3		361	62
85	8.40	0.48	12.19		358	62
86	8.30	0.3	12.17		356	62
87	8.20	0.23	12.08		354	62
88	8.10	0.15	11.85		350	61
89	8.00	0.14	11.59		348	61
90	7.90	0.13	11.23		345	61
91	7.80	0.14	10.84		343	62
92	7.70	0.15	10.61		339	62
93	7.60	0.11	10.46		338	62
94	7.50	0.11	10.42		335	61
95	7.40	0.09	10.21		333	62
96	7.40	0.1	9.78		331	62

97	7.30	0.09	9.44		328	62
98	7.20	0.09	9.32		326	62
99	7.20	0.1	9.12		325	62
100	7.10	0.1	9.21		323	62
101	7.00	0.11	9.45		321	62
102	7.00	0.11	9.49		320	62
103	6.90	0.12	9.5		318	62
104	6.80	0.11	9.77		317	62
105	6.80	0.11	9.69		315	62
106	6.70	0.13	9.78		313	62
107	6.60	0.11	9.79		312	62
108	6.60	0.11	9.76		311	62
109	6.50	0.1	9.8		308	62
110	6.40	0.11	10.2		307	62
111	6.40	0.12	10.21		306	62
112	6.30	0.12	10.28		305	62
113	6.20	0.12	10.41		303	61
114	6.20	0.11	10.41		303	62
115	6.10	0.11	10.55		303	62
116	6.00	0.11	10.48		302	61
117	6.00	0.1	10.3		299	62
118	5.90	0.09	10.22		298	62
119	5.90	0.08	10.15		296	62
120	5.80	0.08	10.09		295	62
121	5.70	0.09	9.97		294	62
122	5.70	0.08	9.71		293	62
123	5.60	0.08	9.66		291	63
124	5.60	0.08	9.65		289	62
125	5.50	0.08	9.67		288	62
126	5.40	0.08	9.58		286	62
127	5.40	0.08	9.56		285	62
128	5.30	0.09	9.5		284	62
129	5.30	0.08	9.48		283	62
130	5.20	0.1	9.32		281	61
131	5.20	0.1	9.27		280	61
132	5.10	0.1	9.2		279	61
133	5.10	0.1	9.15		278	62
134	5.00	0.1	9.15		276	62
135	5.00	0.1	9.11		276	61

136	4.90	0.11	9.28		275	61
137	4.90	0.1	9.26		276	61
138	4.80	0.1	9.18		275	61
139	4.80	0.1	9.09		275	61
140	4.80	0.1	9.13		275	61
141	4.70	0.1	9.11		275	61
142	4.70	0.1	9.17		275	61
143	4.60	0.09	9.08		275	62
144	4.60	0.09	9.17		274	61
145	4.50	0.09	9.17		273	61
146	4.50	0.09	9.15		272	62
147	4.40	0.09	9.18		272	61
148	4.40	0.09	9.17		272	61
149	4.30	0.09	9.21		271	61
150	4.30	0.09	9.35		271	62
151	4.20	0.1	9.42		271	62
152	4.20	0.1	9.47		271	61
153	4.10	0.1	9.58		271	61
154	4.10	0.09	9.5		272	61
155	4.00	0.09	9.62		273	61
156	4.00	0.09	9.65		274	61
157	3.90	0.09	9.76		274	61
158	3.90	0.1	9.63		274	61
159	3.80	0.1	9.5		275	61
160	3.80	0.1	9.59		274	62
161	3.70	0.1	9.54		274	62
162	3.70	0.11	9.35		275	62
163	3.60	0.11	9.21		274	62
164	3.60	0.1	9.09		274	61
165	3.60	0.1	8.93		273	62
166	3.50	0.1	8.76		272	62
167	3.50	0.1	8.76		270	62
168	3.50	0.09	8.54		269	61
169	3.40	0.09	8.5		268	62
170	3.40	0.08	8.45		266	62
171	3.30	0.08	8.49		265	62
172	3.30	0.08	8.45		263	62
173	3.30	0.08	8.48		262	62
174	3.20	0.08	8.46		260	62

175	3.20	0.08	8.43		258	62
176	3.20	0.09	8.39		257	62
177	3.10	0.08	8.34		256	62
178	3.10	0.08	8.33		255	62
179	3.10	0.09	8.37		255	62
180	3.10	0.09	8.23		253	62
181	3.00	0.09	8.28		253	62
182	3.00	0.09	8.24		252	62
183	3.00	0.09	8.29		251	62
184	2.90	0.09	8.21		250	62
185	2.90	0.1	8.2		250	62
186	2.90	0.1	8.12		249	62
187	2.90	0.1	8.13		249	62
188	2.90	0.1	8.19		249	62
189	2.80	0.1	8.17		248	62
190	2.70	0.1	8.14		248	62
191	2.70	0.1	8.1		248	62
192	2.70	0.11	8.03		247	61
193	2.70	0.11	7.91		246	62
194	2.60	0.1	7.76		245	62
195	2.60	0.1	7.63		243	62
196	2.60	0.1	7.56		242	62
197	2.60	0.1	7.45		241	62
198	2.50	0.1	7.42		240	62
199	2.50	0.1	7.38		238	62
200	2.50	0.1	7.35		237	62
201	2.50	0.1	7.27		236	62
202	2.50	0.1	7.3		235	62
203	2.50	0.11	7.23		233	62
204	2.40	0.11	7.19		232	62
205	2.40	0.1	7.19		232	62
206	2.40	0.1	7.15		231	62
207	2.40	0.1	7.13		230	62
208	2.40	0.1	7.1		229	62
209	2.30	0.11	7.09		228	61
210	2.30	0.11	7.14		228	62
211	2.30	0.11	7.12		228	62
212	2.30	0.11	7.11		227	62
213	2.30	0.1	7.13		227	62

214	2.20	0.1	7.03		226	62
215	2.20	0.1	7.01		226	62
216	2.20	0.1	7.02		224	62
217	2.20	0.1	6.82		224	62
218	2.20	0.09	6.7		224	62
219	2.20	0.09	6.61		223	62
220	2.20	0.1	6.62		222	62
221	2.10	0.11	6.52		222	62
222	2.10	0.12	6.53		222	62
223	2.10	0.12	6.5		222	62
224	2.10	0.12	6.49		221	62
225	2.10	0.12	6.42		221	62
226	2.10	0.12	6.39		221	62
227	2.00	0.12	6.39		220	62
228	2.00	0.12	6.38		219	62
229	2.00	0.12	6.32		218	62
230	2.00	0.12	6.2		219	62
231	2.00	0.12	6.05		218	62
232	2.00	0.12	5.99		218	62
233	2.00	0.12	5.98		217	62
234	1.90	0.12	5.93		217	62
235	1.90	0.12	5.97		216	62
236	1.90	0.12	5.86		216	62
237	1.90	0.12	5.88		216	62
238	1.90	0.12	5.85		216	62
239	1.90	0.11	5.85		215	61
240	1.90	0.11	5.84		215	62
241	1.80	0.11	5.88		214	62
242	1.80	0.12	5.85		213	62
243	1.80	0.12	5.87		212	62
244	1.80	0.12	5.88		213	62
245	1.80	0.12	5.82		212	62
246	1.80	0.12	5.9		212	62
247	1.80	0.12	5.93		212	62
248	1.80	0.11	5.9		211	62
249	1.70	0.11	5.86		211	62
250	1.70	0.11	5.89		210	62
251	1.70	0.11	5.89		210	62
252	1.70	0.11	5.93		209	62

253	1.70	0.11	5.91		208	63
254	1.70	0.11	6		208	62
255	1.70	0.1	6.02		208	62
256	1.60	0.1	6.02		207	62
257	1.60	0.1	6.01		206	62
258	1.60	0.11	6.09		206	62
259	1.60	0.1	6.09		206	62
260	1.60	0.1	6.16		205	62
261	1.60	0.09	6.03		205	62
262	1.60	0.09	5.74		205	62
263	1.50	0.09	5.66		205	62
264	1.50	0.09	5.66		204	62
265	1.50	0.09	5.64		204	62
266	1.50	0.09	5.69		203	62
267	1.50	0.09	5.72		203	62
268	1.50	0.09	5.82		203	62
269	1.50	0.09	5.91		202	62
270	1.40	0.09	5.86		201	62
271	1.40	0.09	5.93		201	62
272	1.40	0.09	5.93		201	62
273	1.40	0.09	5.9		201	62
274	1.40	0.09	5.86		200	62
275	1.40	0.08	5.93		200	62
276	1.40	0.09	5.93		199	62
277	1.40	0.08	5.94		199	62
278	1.30	0.08	5.87		198	62
279	1.30	0.08	5.81		198	62
280	1.30	0.07	5.84		198	62
281	1.30	0.07	5.83		197	62
282	1.30	0.07	5.9		196	62
283	1.30	0.07	5.88		196	62
284	1.30	0.08	5.9		196	62
285	1.20	0.08	5.91		195	62
286	1.20	0.08	5.89		195	62
287	1.20	0.08	5.91		194	62
288	1.20	0.08	5.86		194	62
289	1.20	0.08	5.84		194	62
290	1.20	0.08	5.87		194	62
291	1.20	0.08	5.82		194	62

292	1.10	0.08	5.98		194	62
293	1.10	0.08	6.05		193	62
294	1.10	0.09	6.08		194	63
295	1.10	0.09	6.07		194	62
296	1.10	0.08	6		193	62
297	1.10	0.09	6.04		194	62
298	1.10	0.08	6.01		194	62
299	1.00	0.08	6.2		193	62
300	1.00	0.09	6.11		194	62
301	1.00	0.1	5.99		194	62
302	1.00	0.11	6.04		194	62
303	1.00	0.11	6.1		195	62
304	1.00	0.11	6.22		195	62
305	1.00	0.11	6.33		196	62
306	0.90	0.11	6.33		197	62
307	0.90	0.11	6.37		197	62
308	0.90	0.09	6.33		197	62
309	0.90	0.09	6.35		197	62
310	0.90	0.09	6.26		197	62
311	0.90	0.09	6.23		197	62
312	0.80	0.09	6.16		197	62
313	0.80	0.09	6.14		196	62
314	0.80	0.09	6.16		196	62
315	0.80	0.09	6.05		196	62
316	0.80	0.09	6.03		197	62
317	0.80	0.1	5.98		197	62
318	0.70	0.1	6.01		197	62
319	0.70	0.1	6		197	62
320	0.70	0.1	5.97		197	62
321	0.70	0.09	5.95		197	62
322	0.70	0.1	5.93		197	62
323	0.70	0.1	5.95		197	62
324	0.70	0.09	5.94		198	62
325	0.70	0.09	5.92		197	62
326	0.60	0.09	5.9		197	62
327	0.60	0.09	5.93		197	62
328	0.60	0.09	5.94		197	62
329	0.60	0.09	5.91		197	63
330	0.60	0.09	5.94		196	63

331	0.60	0.09	5.9		197	62
332	0.60	0.09	5.93		196	62
333	0.50	0.09	5.93		196	62
334	0.50	0.09	5.86		196	62
335	0.50	0.09	5.82		196	62
336	0.50	0.09	5.79		196	62
337	0.50	0.09	5.76		196	63
338	0.50	0.09	5.78		196	62
339	0.50	0.09	5.76		196	62
340	0.40	0.09	5.73		196	62
341	0.40	0.08	5.75		196	62
342	0.40	0.09	5.77		196	62
343	0.40	0.09	5.92		195	62
344	0.40	0.08	5.88		195	62
345	0.40	0.08	5.82		194	62
346	0.40	0.08	5.75		194	62
347	0.30	0.08	5.72		195	63
348	0.30	0.08	5.67		194	62
349	0.30	0.08	5.64		194	62
350	0.30	0.07	5.9		194	62
351	0.30	0.07	6.04		193	62
352	0.30	0.07	6.04		194	62
353	0.30	0.07	5.98		194	62
354	0.20	0.07	5.96		193	62
355	0.20	0.07	5.98		193	62
356	0.20	0.07	6.01		192	62
357	0.20	0.07	6.12		192	62
358	0.20	0.07	6.08		192	62
359	0.20	0.07	6.08		192	62
360	0.20	0.07	6.03		192	62
361	0.10	0.07	6.03		191	62
362	0.10	0.07	6.03		191	62
363	0.10	0.07	5.97		191	62
364	0.10	0.07	5.91		192	62
365	0.10	0.06	5.84		191	62
366	0.10	0.06	5.78		191	62
367	0.10	0.06	5.75		190	62
368	0.00	0.06	5.73		191	62

OMNI-Test Laboratories, Inc.

Manufacturer:	Kuma Stoves
Model:	K-251
Date:	04/17/23
Run:	3
Control #:	2464
Test Duration:	368
Output Category:	II

Technicians: _____

_____

_____

Test Results in Accordance with CSA B415.1-10

	HHV Basis	LHV Basis
Overall Efficiency	77.5%	83.7%
Combustion Efficiency	97.7%	97.7%
Heat Transfer Efficiency	79%	85.7%

Output Rate (kJ/h)	16,265	15,429	**(Btu/h)**
Burn Rate (kg/h)	1.06	2.34	**(lb/h)**
Input (kJ/h)	21,000	19,920	**(Btu/h)**

Test Load Weight (dry kg)	6.50	14.33	**dry lb**
MC wet (%)	17.17		
MC dry (%)	20.73		
Particulate (g)	8.88		
CO (g)	234		
Test Duration (h)	6.13		

Emissions	**Particulate**	**CO**
g/MJ Output	0.09	2.35
g/kg Dry Fuel	1.37	36.00
g/h	1.45	38.16
lb/MM Btu Output	0.21	5.45

Air/Fuel Ratio (A/F)	13.67

VERSION: **2.4** **4/15/2010**

OMNI-Test Laboratories, Inc.

ASTM E2780 Wood Heater Run Sheets

Client: Kuma Project Number: 0123WM014E Run Number: 3
Model: K-251 Tracking Number: 2464 Date: 04/17/2023
Test Crew: Tony Tong
OMNI Equipment ID numbers: 00637, 00709, 00283A

ASTM E2515 Lab Sheet

Assembled By: Tony Tong

Date/Time in Dessicator: 04/18/23, 8:00

	Weighing #1	Weighing #2	Weighing #3	Weighing #4	Weighing #5
Date/Time:	04/20/23 7:40	04/25/23 7:30	05/02/23 15:00		
R/H %:	7.9	12.3	10.6		
Temp:	66.0	67.1	71.7		
200 mg Audit:	200.1	200.0	200.0		
2 g Audit:	2000.3	2000.2	2000.3		
100 g Audit:	99997.9	99998.0	99997.8		
Initials:	TT	TT	TT		

Train	Element	ID #	Tare (mg)	Weight (mg)	Weight (mg)	Weight (mg)	Weight (mg)	Weight (mg)
A (First Hour)	Front Filter	E875	118.7	121.2	121.2			
	Rear Filter	E876	118.2	117.8	117.8			
	Probe	33	113943.0	113943.1	113943.4	113943.2		
	O-Ring Set	S475	3315.4	3316.5	3316.0	3315.9		
A (Remainder)	Front Filter	E877	118.5	122.1	122.0			
	Rear Filter	E878	118.0	118.1	118.2			
	Probe	58	117067.7	117067.8	117067.8			
	O-Ring Set	S476	3434.0	3437.7	3434.3	3434.3		
B	Front Filter	E879	118.8	125.1	125.1			
	Rear Filter	E880	117.5	117.8	117.8			
	Probe	79	118144.6	118144.8	118144.7			
	O-Ring Set	S477	3373.9	3374.7	3374.3	3374.4		
BG	Filter	E881	118.2	118.3	118.3			

Technician Signature: Tony Tong Date: 05/02/2023

OMNI-Test Laboratories, Inc.

ASTM E2780 Wood Heater Run Sheets

Client: Kuma Project Number: 0123WM014E Run Number: 3
Model: K-251 Tracking Number: 2464 Date: 04/17/2023
Test Crew: Tony Tong, Riley Tiggs
OMNI Equipment ID numbers: 00335, 00336, 00594, 00185, 00322

Wood Heater Run Notes

Air Control Settings

Primary:

Fully closed

Secondary: Fixed

Tertiary/Pilot: N/A

Fan: Fan's off for first 30mins then on low for the remainder of test.

Preburn Notes

Time	Notes
10:48	Running preburn @ 7.4 lbs with low burn setting
11:48	Preburn

Test Notes

Sketch test fuel configuration:

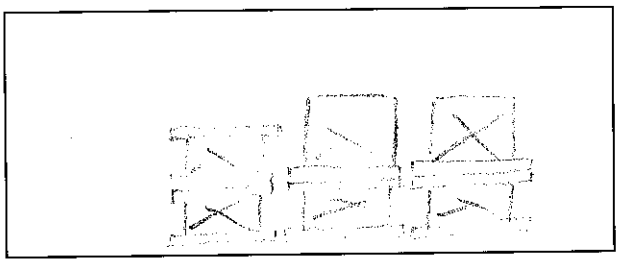

Start up procedures & Timeline:

Bypass: used
Fuel loaded by: 60
Door closed at: 65
Primary air: Fully closed

Notes:

Time	Notes
11:49	Test started
12:19	Set fan on low
12:49	1st hour filter change

Technician Signature: Tony Tong Date: 04/17/23

OMNI-Test Laboratories, Inc.

ASTM E2780 Wood Heater Run Sheets

Client: Kuma Project Number: 0123WM014E Run Number: 3
Model: K-251 Tracking Number: 2464 Date: 04/17/2023
Test Crew: Tommy Tong, Riley Triggs
OMNI Equipment ID numbers: 00594, 00410, 00716, 00721, 00255

Wood Heater Supplemental Data

Start Time: 11:49 Booth #: E1

Stop Time:

Stack Gas Leak Check:

Initial: good Final: good

Sample Train Leak Check: 0.000

A: 0.000 @ 13.5"Hg A1: 13.5

B: 0.000 @ 11.6"Hg

Calibrations: Span Gas CO_2: 16.94% CO: 4.32% CO 500 ppm

	Pre Test		Post Test	
	Zero	Span	Zero	Span
Time	10:58	11:00	1759	1758
CO_2 %	0.00	16.94	0.01	16.90
CO %	0.00	4.33	-0.004	4.30
CO ppm	0.0	494		

Air Velocity (ft/min): Initial: <50 Final: <50

Scale Audit (lbs): Initial: 10 Final: 10

Pitot Tube Leak Test: Initial: good Final: good

Stack Diameter (in): 6

Induced Draft: 0.000

% Smoke Capture: 100

Flue Pipe Cleaned Prior to First Test in Series:

Date: 04/04/23 Initials: TT

Tunnel Traverse		
Microtector Reading	dP (in H_2O)	T(°F)
1	0.070	78
2	0.072	78
3	0.082	78
4	0.064	78
5	0.058	78
6	0.086	78
7	0.084	78
8	0.068	78
Center:		
	0.098	78

	Initial	Middle	Ending
P_b (in/Hg)	29.76	29.75	29.72
RH (%)	41	46	43
Ambient (°F)	62	62	62

Background Filter Volume: 68.403

Tunnel Static Pressure (in H_2O):	
Beginning of Test	End of Test
-0.32	-0.30

Technician Signature: Tommy Tong

Date: 04/17/2023

OMNI-Test Laboratories, Inc. **ASTM E2780 Wood Heater Run Sheets**

Client: Kuma Project Number: 0123WM014E Run Number: 3

Model: K-251 Tracking Number: 2464 Date: 04/17/2023

Test Crew: Tony / Tong

OMNI Equipment ID numbers: 00340, 00431, T61, 00353

Wood Heater Fuel Data

Fuel: Douglas fir, untreated and air dried, standard grade or better dimensional lumber

Pre-Burn Fuel

Calibration: Cal Value (1) = 12% Actual Reading 12.9

Cal Value (2) = 22% Actual Reading 22.9

Piece:	Length:	Reading:	Piece:	Length:	Reading:
1	12 in	24.7	7	16 in	22.7
2	12 in	24.9	8	in	
3	12 in	21.1	9	in	
4	12 in	23.2	10	in	
5	16 in	22.7	11	in	
6	16 in	22.5	12	in	

Total Pre-Burn Fuel Weight: 9.9 lbs Pre-Burn Fuel Average Moisture:

Time (clock): 9:10 Room Temperature (F): 61 Initials: TT

Test Fuel

Firebox Volume (ft³): 2.56 Test Fuel Piece Length (in): 17.25"

Load Weight Range (lb): (16.13, 19.71) Total Wet Fuel Load Weight (lb): 17.3 (3.46, 4.33)

Fuel Type & Amount: 2 x 4: 4 4 x 4: 2

Weight (with spacers): ~~8.0~~ 7.9 Weight (with spacers): 9.4

Piece:	Weight (lbs):	Moisture Readings (%DB):				Fuel Type:
1	1.6	~~18.7~~ 19.0	~~18.~~ 19.1	21.0		2x4
2	1.5	19.2	19.0	19.1		2x4
3	1.7	21.7	21.5	19.1		2x4
4	1.6	19.7	19.3	19.0		2x4
5	4.2	23.8	22.5	23.8		4x4
6	4.7	22.0	23.8	20.4		4x4
7						

Spacer Moisture Readings (%DB)

17.2	20.1	16.4	16.2	13.9	15.5	16.2	14.2
15.9	16.1	12.0	16.5	16.2	16.4	13.6	13.2
12.8	18.4	16.6	14.2				

Time (clock): 9:30 Room Temperature (F): 61 Initials: TT

Technician Signature: Tony Tong Date: 04/17/23

Run 4

Medium High Burn (Category III)

Wood Heater Preburn Data - ASTM E2780

Run:	4

Technician Signatu

Manufacturer:	Kuma Stoves
Model:	K-251
Tracking No.:	2464
Project No.:	0123WM014E
Test Date:	4/18/23
Beginning Clock Time:	11:21

Preburn Fuel Data

4	pieces @	12	inches
3	pieces @	16	inches
	pieces @		inches

Fuel Moisture Readings (% DB):

20.2	21.4	19.7	21.5	19.1	21.5	23.8

Avg Preburn Moisture (% DB): **21.03**

Coal Bed Range (lb):	**3.4** (min)	**4.3** (max)

			Temperatures (°F)								
Elapsed Time (min)	Scale (lb)	Stack Draft (in H_2O)	FB Top	FB Bottom	FB Back	FB Left	FB Right	Cat Exit	Avg. FB	Stack	Ambient
0	10.2	-0.06	466	376	315	477	459	3218	418.6	409	61
1	10.1	-0.06	476	377	314	475	457	3218	419.9	379	60
2	10	-0.059	485	378	310	473	455	3218	420.3	366	60
3	9.9	-0.058	487	378	305	470	453	3218	418.6	354	60
4	9.9	-0.057	486	378	301	467	450	3218	416.4	346	60
5	9.8	-0.056	482	378	300	463	447	3218	414.1	339	60
6	9.7	-0.055	477	378	295	460	444	3218	410.7	333	60
7	9.6	-0.055	472	378	290	456	440	3218	407.2	329	60
8	9.5	-0.054	467	377	286	452	437	3218	404	326	61
9	9.4	-0.054	462	377	283	449	434	3218	400.9	323	60
10	9.4	-0.054	458	377	282	446	431	3218	398.6	321	60
11	9.3	-0.054	465	376	311	444	429	3218	404.8	321	60
12	9.2	-0.053	469	375	312	442	426	3218	404.9	323	60
13	9.1	-0.054	471	374	315	440	424	3218	404.9	323	60
14	9	-0.054	473	373	317	438	422	3218	404.7	325	60
15	9	-0.054	475	373	318	436	421	3218	404.6	325	60
16	8.8	-0.053	479	372	325	435	419	3218	405.7	327	61
17	8.7	-0.054	482	371	326	433	418	3218	405.9	327	60
18	8.6	-0.054	486	370	328	432	417	3218	406.6	328	60
19	8.5	-0.054	491	369	329	431	416	3218	407.5	330	60
20	8.4	-0.054	496	368	330	431	416	3218	408.3	331	60
21	8.3	-0.053	500	368	332	430	416	3218	409	331	60
22	8.2	-0.054	503	367	332	429	415	3218	409.3	331	60
23	8.1	-0.054	504	366	334	429	415	3218	409.6	331	60
24	8	-0.053	506	365	335	428	414	3218	409.9	330	60
25	7.9	-0.053	508	365	337	428	414	3218	410.4	330	60
26	7.8	-0.052	511	364	338	428	414	3218	411	332	60
27	7.7	-0.054	516	363	339	428	414	3218	411.9	335	60
28	7.6	-0.054	522	362	341	428	415	3218	413.4	338	60
29	7.5	-0.056	530	362	342	429	415	3218	415.4	343	60
30	7.4	-0.056	540	361	344	429	416	3218	418	349	60
31	7.3	-0.057	551	360	346	430	417	3218	420.8	353	60
32	7.1	-0.057	564	360	348	432	418	3218	424.2	358	60
33	7	-0.057	576	359	351	433	419	3218	427.5	364	60
34	6.9	-0.058	587	359	353	434	420	3218	430.6	370	60
35	6.7	-0.058	598	358	356	436	422	3218	434	376	61
36	6.5	-0.06	608	358	359	437	423	3218	437	382	60
37	6.4	-0.06	616	357	361	440	426	3218	439.8	387	60
38	6.2	-0.06	623	357	365	442	428	3218	442.9	389	60
39	6	-0.061	630	357	369	445	430	3218	446	391	60
40	5.9	-0.06	635	356	372	448	432	3218	448.8	391	60
41	5.7	-0.06	641	356	376	451	435	3218	451.8	392	60
42	5.6	-0.062	646	356	380	454	437	3218	454.7	393	60

Wood Heater Preburn Data - ASTM E2780

Run: 4

Technician Signatu

Manufacturer: Kuma Stoves
Model: K-251
Tracking No.: 2464
Project No.: 0123WM014E
Test Date: 4/18/23
Beginning Clock Time: 11:21

Preburn Fuel Data

4 pieces @ 12 inches
3 pieces @ 16 inches
pieces @ inches

Fuel Moisture Readings (% DB):

20.2	21.4	19.7	21.5	19.1	21.5	23.8

Avg Preburn Moisture (% DB): **21.03**

Coal Bed Range (lb):	**3.4** (min)	**4.3** (max)

			Temperatures (°F)								
Elapsed Time (min)	Scale (lb)	Stack Draft (in H_2O)	FB Top	FB Bottom	FB Back	FB Left	FB Right	Cat Exit	Avg. FB	Stack	Ambient
43	5.4	-0.059	650	356	383	458	439	3218	457.3	393	60
44	5.3	-0.06	654	356	387	461	442	3218	460	393	60
45	5.2	-0.059	658	356	391	464	444	3218	462.6	393	60
46	5	-0.059	662	357	394	467	447	3218	465.1	393	60
47	4.9	-0.059	665	357	397	470	449	3218	467.7	392	60
48	4.8	-0.059	669	357	401	472	452	3218	470.4	391	61
49	4.7	-0.059	673	357	405	475	455	3218	472.8	390	61
50	4.6	-0.058	675	358	408	477	457	3218	475	388	60
51	4.5	-0.058	675	358	410	480	460	3218	476.7	387	60
52	4.4	-0.056	674	358	414	482	463	3218	478.1	383	60
53	4.3	-0.057	670	358	416	485	465	3218	478.8	380	60
54	4.3	-0.055	664	359	419	487	467	3218	479.3	375	61
55	4.2	-0.056	658	359	422	489	470	3218	479.5	372	61
56	4.1	-0.056	652	360	424	491	472	3218	479.7	368	61
57	4	-0.055	645	360	427	493	474	3218	479.8	364	62
58	4	-0.054	638	361	429	494	476	3218	479.8	360	61
59	3.9	-0.053	631	361	431	495	478	3218	479.5	356	61
60	3.9	-0.052	623	362	434	496	480	3218	479.4	352	60
61	3.8	-0.052	616	363	437	497	482	3218	479	347	61
62	3.8	-0.052	608	364	439	497	484	3218	478.4	343	61
63	3.7	-0.051	601	365	441	497	485	3218	477.8	340	61
64	3.7	-0.051	597	366	443	497	486	3218	477.8	336	61
65	3.7	-0.051	591	367	444	497	487	3218	477.2	333	60
66	3.7	-0.05	585	367	445	497	488	3218	476.4	330	61
67	3.6	-0.049	577	368	445	496	488	3218	475	327	61

Wood Heater Test Fuel Data - ASTM E2780

Manufacturer :	Kuma Stoves
Model :	K-251
Tracking No. :	2464
Project No. :	0123WM014E
Test Date :	4/18/2023
Run No. :	4

Moisture Meter Cal	
Cal Block	Measured
12.0	12.0
22.0	22.0

Firebox Volume :	2.56	ft3
% 2 x 4 Required :	35 - 65	%
Ideal Fuel Weight :	17.92	lb.
Minimum Fuel Weight :	16.13	lb.
Maximum Fuel Weight :	19.71	lb.

Fuel Piece Data

PC #	Weight, lb	Size	Length, In	Moisture Readings, Dry Basis %			Average MC, % db	Dry Weight, lb.	Volume, ft3	Wet Weights, lb 4 x 4	Wet Weights, lb 2 x 4	Dry Weights, lb 4 x 4	Dry Weights, lb 2 x 4
1	1.80	2x4	17.25	23.1	23.3	25.7	24.0	1.45	0.0524		1.8		1.45
2	1.70	2x4	17.25	19.8	19.4	20.8	20.0	1.42	0.0524		1.7		1.42
3	1.50	2x4	17.25	19.8	19.8	21.7	20.4	1.25	0.0524		1.5		1.25
4	1.50	2x4	17.25	19.9	21.0	21.7	20.9	1.24	0.0524		1.5		1.24
5	4.50	4x4	17.25	23.2	22.4	24.3	23.3	3.65	0.1223	4.5		3.65	
6	4.00	4x4	17.25	23.2	22.0	19.5	21.6	3.29	0.1223	4.0		3.29	
7													
8													
9													

Spacer Data

Moisture Readings, Dry Basis % (One reading per spacer)								
10.5	10.3	11.1	10.0	12.6	9.4	10.0	10.4	
11.4	11.4	12.9	11.5	10.5	10.9	11.2	12.5	
9.1	10.0	12.0	11.1					

Avg : 10.9

Assembled Crib Fuel Load with Spacers Attatched

PC #	Weight, lb with Spacers	Size	4 x 4s	2 x 4s
1	2.30	2x4		2.3000
2	2.10	2x4		2.1000
3	1.90	2x4		1.9000
4	1.90	2x4		1.9000
5	4.70	4x4	4.70	
6	4.20	4x4	4.20	
7				
8				
9				

Combined Mass of 4 x 4s	8.9	lb
Combined Mass of 2 x 4s	8.2	lb
Total Wet Mass of Fuel Load	**17.1**	lb

Fuel Load Properties

Type	Number of Pieces	Wet Weight, lb.	Dry Weight, lb.	Fuel Loading Density, lb/ft³ Wet Basis	Fuel Loading Density, lb/ft³ Dry Basis	Dry Fuel Density, lb/ft³	Wet Fuel Density, lb/ft³	Moisture, % Dry Basis	Moisture, % Wet Basis
2 x 4	4	6.5	5.35	6.68	5.54	27.07	33.02	20.53	17.03
4 x 4	2	8.5	6.94						
Spacers	20	2.1	1.89						
Totals		17.1	14.19						

Compliance Checks

	Fuel Load, Wet Lb.	Load Density, lb/ft³ of FB vol	Fuel Density, lb/ft³	% of Fuel load mass which is 2x4	Fuel Load Peices Mositure, % db
Measured	17.1	6.68	27.07	48	21.7
Required	16.1 - 19.7	6.3 - 7.7	25 - 36	35 - 65	19 -25
Complies ?	Yes	Yes	Yes	Yes	Yes

Wood Heater Test Data

u

Run: 4

Manufacturer: Kuma Stoves
Model: K-251
Tracking No.: 2464
Project No.: 0123WM014E
Test Date: 18-Apr-23
Beginning Clock Time: 12:29

Total Sampling Time: 254 min
Recording Interval: 1 min
Tunnel Diameter: 6
Background Sample Volume: 45.857 cubic feet

PM Control Modules: 335,336
Dilution Tunnel MW(dry): 29.00 lb/lb-mole
Dilution Tunnel MW(wet): 28.78 lb/lb-mole
Dilution Tunnel H2O: 2.00 percent
Dilution Tunnel Static: -0.300 "H2O
Tunnel Area: 0.19635 ft2
Pitot Tube Cp: 0.99

Avg. Tunnel Velocity: 18.37 ft/sec.
Initial Tunnel Flow: 207.6 scfm
Average Tunnel Flow: 207.6 scfm
Post-Test Leak Check (1st Hr): 0.000 cfm @ 4 in. Hg
Post-Test Leak Check (1): 0.001 cfm @ 4 in. Hg
Post-Test Leak Check (2): 0.000 cfm @ 4 in. Hg
Average Test Piece Fuel Moisture: 20.53 Dry Basis %

Technician Signature:_____

Meter Box Y Factor: 1.004 (1) 1.002 (2) 1.012 (Amb)

Export to PDF

Barometric Pressure:	Begin	Middle	End	Average
	29.96	29.96	29.97	29.96

Room Air Velocity, fpn
<50

OMNI Equipment Numbers: _____

Velocity Traverse Data

	Pt.1	Pt.2	Pt.3	Pt.4	Pt.5	Pt.6	Pt.7	Pt.8	Center	
Initial dP	0.070	0.092	0.084	0.050	0.058	0.088	0.094	0.072	0.098	"H2O
Temp:	79	79	80	80	80	80	80	80	79	°F

V_{strav} 18.37 ft/sec V_{scent} 20.96 ft/sec F_p 0.876

qwq

	Particulate Sampling Data														Fuel Weight (lb)		Temperature Data (°F)													Stack Gas Data		
Elapsed Time (min)	Gas Meter 1 (ft^3)	Gas Meter 2 (ft^3)	Sample Rate 1 (cfm)	Sample Rate 2 (cfm)	Orifice dH 1 ("H_2O)	Meter 1 Temp (°F)	Meter 1 Vacuum ("Hg)	Orifice dH 2 ("H_2O)	Meter 2 Temp (°F)	Meter 2 Vacuum ("Hg)	Dilution Tunnel (°F)	Dilution Tunnel Center dP	Pro. Rate 1	Pro. Rate 2	Scale Reading	Weight Change	Firebox Top	Firebox Bottom	Firebox Back	Firebox Left	Firebox Right	Avg. Stove Surface (Tot = ΔT)	Catalyst Exit	Stack	Filter 1	Dryer Exit 1	Filter 2	Dryer Exit 2	Ambient	Draft ("H_2O)	CO_2 (%)	CO (%)
Tot / Avg	**40.71**	**40.60**	**0.16**	**0.16**	**1.28**	**72.58**	**3.00**	**1.00**	**72.61**	**2.27**	**79.81**	**0.10**	**100.00**	**100.00**		-17.1	548	348	390	456	447	**60**	914	331	65	48	64	51	62	(0.05)	9.06	0.19
Minimum			0.15	0.14	0.77	65.00	2.28	0.51	65.00	1.60	73.00	0.09	96.89	95.52	0.00	-0.200	407	306	324	393	397	413	717	261	61	40	61	43	60	(0.07)	2.18	0.04
Max			0.16	0.16	1.30	74.00	3.13	1.02	74.00	2.30	139.00	0.10	105.05	105.99	17.10	0.000	715	421	446	499	494	474	1181	424	67	50	66	53	64	(0.04)	13.43	1.68
0	0.000	0.000			0.77	65	2.28	0.51	65	1.6	98	0.098			17.1		566	375	445	495	489	474	898	403	61	44	61	45	61	-0.060	3.1	0.31
1	0.152	0.140	0.15	0.14	1.28	65	2.69	0.97	65	2.2	139	0.094	103	96	17.0	-0.1	552	366	446	495	488	469	864	424	63	40	62	43	62	-0.065	2.18	0.34
2	0.311	0.296	0.16	0.16	1.28	65	2.68	0.97	65	2.2	101	0.098	103	101	16.8	-0.2	535	372	446	493	487	467	805	363	64	40	63	43	61	-0.054	4.68	0.42
3	0.469	0.452	0.16	0.16	1.27	65	2.67	0.97	65	2.2	90	0.099	100	99	16.8	0	529	373	443	490	486	464	802	348	64	40	63	43	61	-0.057	6.36	0.07
4	0.627	0.607	0.16	0.16	1.28	65	2.67	0.99	65	2.2	87	0.099	100	98	16.7	-0.1	535	373	441	487	483	464	851	351	64	40	63	43	60	-0.058	6.77	0.08
5	0.785	0.765	0.16	0.16	1.28	65	2.68	0.99	65	2.2	85	0.097	101	101	16.6	-0.1	537	373	436	483	480	462	877	354	64	40	63	43	60	-0.058	7.33	0.07
6	0.944	0.922	0.16	0.16	1.28	65	2.68	0.99	65	2.2	85	0.099	101	100	16.4	-0.2	542	374	432	478	474	460	888	358	64	40	63	43	61	-0.058	8.59	0.05
7	1.102	1.079	0.16	0.16	1.27	65	2.67	0.98	66	2.2	85	0.098	100	100	16.3	-0.1	547	374	428	473	470	458	897	361	64	40	63	43	61	-0.058	8.46	0.04
8	1.260	1.236	0.16	0.16	1.26	65	2.66	0.97	66	2.2	85	0.099	100	99	16.2	-0.1	553	374	424	468	465	457	899	363	64	40	63	43	61	-0.058	8.2	0.04
9	1.418	1.393	0.16	0.16	1.26	66	2.68	0.97	66	2.2	85	0.100	99	99	16.1	-0.1	562	375	420	462	461	456	906	367	64	40	63	43	61	-0.059	9.71	0.06
10	1.575	1.550	0.16	0.16	1.26	66	2.67	0.97	66	2.2	86	0.099	99	99	16.0	-0.1	573	375	415	457	456	455	922	372	64	41	63	43	61	-0.059	9.82	0.09
11	1.732	1.706	0.16	0.16	1.28	66	2.7	0.98	66	2.2	86	0.100	99	98	15.8	-0.2	581	374	411	453	452	454	930	376	65	41	64	43	61	-0.059	9.61	0.04
12	1.892	1.864	0.16	0.16	1.30	66	2.72	1.01	66	2.3	86	0.099	101	100	15.7	-0.1	588	374	406	448	448	453	934	378	65	41	64	44	61	-0.060	10.11	0.06
13	2.052	2.023	0.16	0.16	1.29	66	2.72	1.01	66	2.3	86	0.096	103	102	15.6	-0.1	595	373	402	443	444	451	937	380	65	41	64	44	61	-0.060	9.61	0.05
14	2.211	2.182	0.16	0.16	1.29	66	2.72	1.01	66	2.3	86	0.098	101	101	15.5	-0.1	600	372	398	439	440	450	939	381	65	41	64	44	61	-0.060	9.06	0.05
15	2.371	2.342	0.16	0.16	1.29	66	2.72	1.01	66	2.3	85	0.099	101	101	15.3	-0.2	596	372	397	435	438	448	939	381	65	41	64	44	62	-0.060	8.63	0.05
16	2.531	2.501	0.16	0.16	1.29	67	2.72	1.01	67	2.3	85	0.100	100	100	15.2	-0.1	592	371	393	432	435	445	939	381	65	42	64	44	62	-0.060	8.63	0.04
17	2.691	2.660	0.16	0.16	1.30	67	2.72	1.01	67	2.3	85	0.099	101	100	15.1	-0.1	598	370	388	429	432	443	962	387	65	42	64	44	61	-0.061	11.57	0.28
18	2.850	2.820	0.16	0.16	1.28	67	2.7	1.01	67	2.3	85	0.099	100	101	14.9	-0.2	604	369	384	426	429	442	990	388	65	42	64	44	61	-0.061	10.57	0.09
19	3.009	2.978	0.16	0.16	1.29	67	2.71	1.01	67	2.3	84	0.099	100	100	14.8	-0.1	609	367	380	424	426	441	1003	389	65	42	64	44	61	-0.062	9.76	0.06
20	3.169	3.138	0.16	0.16	1.29	67	2.72	1.01	67	2.3	84	0.098	101	102	14.7	-0.1	611	366	376	421	424	440	1008	387	65	42	64	45	61	-0.061	9.51	0.05
21	3.330	3.297	0.16	0.16	1.29	67	2.71	1.01	67	2.3	84	0.099	101	100	14.5	-0.2	611	365	372	419	422	438	1007	385	65	42	64	45	62	-0.062	8.98	0.05
22	3.490	3.456	0.16	0.16	1.28	68	2.7	1.00	68	2.3	84	0.098	101	101	14.4	-0.1	610	363	368	417	419	435	1002	381	66	43	64	45	61	-0.061	8.43	0.05
23	3.649	3.617	0.16	0.16	1.29	68	2.71	1.01	68	2.3	84	0.098	100	102	14.3	-0.1	608	362	365	414	417	433	995	379	66	43	64	45	62	-0.060	8.61	0.05
24	3.808	3.775	0.16	0.16	1.28	68	2.72	1.01	68	2.3	84	0.100	99	99	14.2	-0.1	607	360	361	412	415	431	990	377	66	43	64	45	62	-0.060	8.95	0.05
25	3.969	3.935	0.16	0.16	1.29	68	2.71	1.00	68	2.3	83	0.100	101	100	14.1	-0.1	605	359	358	410	413	429	986	377	66	43	64	45	61	-0.060	9.3	0.04
26	4.129	4.095	0.16	0.16	1.29	68	2.72	1.01	68	2.3	83	0.100	100	100	14.0	-0.1	606	357	354	409	411	427	989	376	66	43	64	45	61	-0.061	9.45	0.07
27	4.288	4.254	0.16	0.16	1.29	68	2.71	1.01	68	2.3	83	0.099	100	100	13.8	-0.2	607	356	351	407	409	426	997	377	66	43	64	46	62	-0.060	8.97	0.07
28	4.448	4.413	0.16	0.16	1.29	68	2.71	1.01	69	2.3	84	0.097	102	101	13.7	-0.1	610	354	349	405	407	425	1009	379	66	44	65	46	61	-0.061	10.12	0.18
29	4.608	4.573	0.16	0.16	1.29	69	2.71	1.00	69	2.3	84	0.100	100	100	13.6	-0.1	615	353	346	404	406	425	1030	383	66	44	65	46	61	-0.061	11.13	0.3
30	4.769	4.732	0.16	0.16	1.29	69	2.72	1.01	69	2.3	84	0.099	101	100	13.5	-0.1	621	351	342	402	405	424	1046	385	66	44	65	46	62	-0.061	11.06	0.24
31	4.929	4.891	0.16	0.16	1.28	69	2.71	1.01	69	2.3	84	0.099	100	100	13.3	-0.2	626	349	340	401	404	424	1059	387	66	44	65	46	62	-0.062	10.66	0.13
32	5.089	5.052	0.16	0.16	1.29	69	2.72	1.01	69	2.3	84	0.099	100	101	13.2	-0.1	631	347	338	400	402	424	1068	387	66	44	65	46	61	-0.061	10.64	0.12
33	5.248	5.211	0.16	0.16	1.29	69	2.72	1.01	69	2.3	84	0.098	100	100	13.1	-0.1	634	344	336	399	402	423	1072	386	66	44	65	46	62	-0.062	9.57	0.1
34	5.409	5.370	0.16	0.16	1.29	69	2.72	1.01	69	2.3	84	0.098	101	100	13.0	-0.1	635	343	334	398	401	422	1069	383	66	45	65	47	62	-0.061	8.82	0.07
35	5.569	5.530	0.16	0.16	1.29	69	2.71	1.01	70	2.3	83	0.099	100	100	12.9	-0.1	634	342	332	397	400	421	1064	382	66	45	65	47	62	-0.061	8.88	0.06
36	5.729	5.690	0.16	0.16	1.29	70	2.7	1.00	70	2.3	84	0.098	101	101	12.7	-0.2	632	340	331	396	399	420	1056	379	66	45	65	47	62	-0.060	8.98	0.06
37	5.889	5.850	0.16	0.16	1.28	70	2.71	1.01	70	2.3	84	0.099	100	100	12.6	-0.1	630	339	329	395	398	418	1048	378	66	45	65	47	62	-0.060	9.95	0.05
38	6.049	6.010	0.16	0.16	1.29	70	2.7	1.01	70	2.3	84	0.100	100	100	12.5	-0.1	630	338	328	394	397	417	1052	381	66	45	65	47	62	-0.061	11.3	0.12
39	6.210	6.169	0.16	0.16	1.29	70	2.71	1.01	70	2.3	85	0.096	102	101	12.4	-0.1	634	337	327	394	397	418	1064	386	66	45	65	47	62	-0.062	12.47	0.37
40	6.371	6.329	0.16	0.16	1.29	70	2.7	1.00	70	2.3	85	0.098	101	101	12.2	-0.2	640	335	325	393	397	418	1079	391	66	45	65	47	62	-0.062	12.78	0.35

Wood Heater Test Data

u

Run: 4

Manufacturer: Kuma Stoves
Model: K-251
Tracking No.: 2464
Project No.: 0123WM014E
Test Date: 18-Apr-23
Beginning Clock Time: 12:29

Total Sampling Time: 254 min
Recording Interval: 1 min
Tunnel Diameter: 6
Background Sample Volume: 45.857 cubic feet

PM Control Modules: 335,336
Dilution Tunnel MW(dry): 29.00 lb/lb-mole
Dilution Tunnel MW(wet): 28.78 lb/lb-mole
Dilution Tunnel H2O: 2.00 percent
Dilution Tunnel Static: -0.300 "H2O
Tunnel Area: 0.19635 ft2
Pitot Tube Cp: 0.99

Avg. Tunnel Velocity: 18.37 ft/sec.
Initial Tunnel Flow: 207.6 scfm
Average Tunnel Flow: 207.6 scfm
Post-Test Leak Check (1st Hr): 0.000 cfm @ 4 in. Hg
Post-Test Leak Check (1): 0.001 cfm @ 4 in. Hg
Post-Test Leak Check (2): 0.000 cfm @ 4 in. Hg
Average Test Piece Fuel Moisture: 20.53 Dry Basis %

Technician Signature:_____

Meter Box Y Factor: 1.004 (1) 1.002 (2) 1.012 (Amb)

Export to PDF

Barometric Pressure:	Begin	Middle	End	Average
	29.96	29.96	29.97	29.96

Room Air Velocity, fpn
<50

OMNI Equipment Numbers: _____

Velocity Traverse Data

	Pt.1	Pt.2	Pt.3	Pt.4	Pt.5	Pt.6	Pt.7	Pt.8	Center	
Initial dP	0.070	0.092	0.084	0.050	0.058	0.088	0.094	0.072	0.098	"H2O
Temp:	79	79	80	80	80	80	80	80	79	°F

V_{strav} 18.37 ft/sec V_{scent} 20.96 ft/sec F_p 0.876

qwq

	Particulate Sampling Data														Fuel Weight (lb)		Temperature Data (°F)													Stack Gas Data		
Elapsed Time (min)	Gas Meter 1 (ft^3)	Gas Meter 2 (ft^3)	Sample Rate 1 (cfm)	Sample Rate 2 (cfm)	Orifice dH 1 ("H_2O)	Meter 1 Temp (°F)	Meter 1 Vacuum ("Hg)	Orifice dH 2 ("H_2O)	Meter 2 Temp (°F)	Meter 2 Vacuum ("Hg)	Dilution Tunnel (°F)	Dilution Tunnel Center dP	Pro. Rate 1	Pro. Rate 2	Scale Reading	Weight Change	Firebox Top	Firebox Bottom	Firebox Back	Firebox Left	Firebox Right	Avg. Stove Surface (Tot = ΔT)	Catalyst Exit	Stack	Filter 1	Dryer Exit 1	Filter 2	Dryer Exit 2	Ambient	Draft ("H_2O)	CO_2 (%)	CO (%)
41	6.531	6.489	0.16	0.16	1.28	70	2.72	1.00	70	2.3	85	0.098	101	101	12.1	-0.1	646	333	325	393	397	419	1094	394	66	46	65	48	62	-0.062	13.02	0.36
42	6.691	6.648	0.16	0.16	1.28	70	2.71	1.01	70	2.3	85	0.099	100	100	11.9	-0.2	652	329	324	394	398	419	1108	398	66	46	65	48	62	-0.062	13.18	0.48
43	6.851	6.808	0.16	0.16	1.29	70	2.71	1.01	71	2.3	86	0.098	101	101	11.8	-0.1	659	328	324	394	398	421	1120	401	66	46	65	48	63	-0.063	12.96	0.81
44	7.012	6.968	0.16	0.16	1.29	71	2.72	1.00	71	2.3	86	0.096	102	102	11.6	-0.2	664	327	325	395	399	422	1126	402	66	46	65	48	62	-0.062	12.85	0.47
45	7.172	7.127	0.16	0.16	1.29	71	2.73	1.01	71	2.3	86	0.099	100	100	11.5	-0.1	670	326	326	396	400	424	1130	404	66	46	65	48	63	-0.062	13.01	0.7
46	7.332	7.287	0.16	0.16	1.29	71	2.72	1.01	71	2.3	86	0.098	101	101	11.3	-0.2	675	325	326	398	401	425	1136	406	66	46	65	48	62	-0.064	13.06	0.81
47	7.493	7.447	0.16	0.16	1.29	71	2.71	1.00	71	2.3	86	0.099	101	100	11.1	-0.2	681	323	328	399	402	427	1145	407	66	46	65	48	62	-0.063	13.22	1.21
48	7.653	7.606	0.16	0.16	1.29	71	2.73	1.01	71	2.3	86	0.099	100	100	11.0	-0.1	687	323	329	400	404	429	1154	410	66	47	65	48	62	-0.064	13.31	1.44
49	7.814	7.767	0.16	0.16	1.29	71	2.71	1.01	71	2.3	86	0.097	102	102	10.8	-0.2	692	323	330	403	406	431	1162	413	66	47	65	48	62	-0.065	13.29	1.68
50	7.974	7.927	0.16	0.16	1.29	71	2.72	1.00	71	2.3	87	0.097	101	102	10.6	-0.2	696	322	332	405	408	433	1168	414	66	47	65	49	62	-0.065	13.31	1.66
51	8.134	8.086	0.16	0.16	1.28	71	2.72	1.01	71	2.3	87	0.098	101	100	10.5	-0.1	699	321	334	407	410	434	1174	413	66	47	65	49	62	-0.064	13.33	1.56
52	8.295	8.247	0.16	0.16	1.29	71	2.73	1.01	71	2.3	87	0.099	101	101	10.3	-0.2	702	320	335	409	413	436	1178	414	66	47	65	49	62	-0.065	13.42	1.53
53	8.455	8.407	0.16	0.16	1.29	72	2.73	1.00	72	2.3	87	0.100	100	100	10.2	-0.1	704	319	338	412	415	438	1180	415	66	47	65	49	61	-0.065	13.43	1.34
54	8.616	8.566	0.16	0.16	1.29	72	2.72	1.01	72	2.3	87	0.100	100	99	10.0	-0.2	706	318	339	414	417	439	1181	415	66	47	65	49	62	-0.065	13.33	1.08
55	8.776	8.727	0.16	0.16	1.28	72	2.73	1.01	72	2.3	87	0.099	100	101	9.9	-0.1	708	317	342	417	419	441	1180	414	66	48	65	49	63	-0.064	13.15	0.8
56	8.937	8.887	0.16	0.16	1.28	72	2.73	1.01	72	2.3	87	0.099	101	100	9.7	-0.2	708	316	343	419	421	441	1176	411	67	48	65	49	63	-0.064	12.95	0.48
57	9.097	9.046	0.16	0.16	1.28	72	2.72	1.01	72	2.3	87	0.098	101	100	9.6	-0.1	706	315	345	422	422	442	1168	409	67	48	65	49	63	-0.062	12.71	0.39
58	9.257	9.207	0.16	0.16	1.29	72	2.73	1.01	72	2.3	87	0.097	101	102	9.4	-0.2	704	314	346	424	424	442	1159	407	66	48	65	50	62	-0.062	12.53	0.28
59	9.418	9.367	0.16	0.16	1.28	72	2.73	1.00	72	2.3	86	0.097	102	101	9.3	-0.1	703	313	347	426	425	443	1152	405	66	48	65	50	61	-0.061	12.57	0.22
60	9.579	9.527	0.16	0.16	1.28	72	2.71	1.01	72	2.3	86	0.099	101	100	9.2	-0.1	702	312	348	428	427	443	1146	403	67	48	65	50	63	-0.062	12.5	0.32
61	9.738	9.687	0.16	0.16	1.30	72	3.12	1.01	72	2.3	86	0.098	100	101	9.1	-0.1	702	312	348	431	428	444	1145	404	62	48	65	50	62	-0.062	12.86	0.28
62	9.899	9.848	0.16	0.16	1.29	72	3.13	1.01	72	2.3	86	0.099	101	101	8.9	-0.2	702	311	349	433	430	445	1145	404	63	48	65	50	62	-0.062	13.05	0.36
63	10.060	10.007	0.16	0.16	1.29	72	3.12	1.01	72	2.3	87	0.099	101	100	8.8	-0.1	703	310	351	435	431	446	1147	405	63	48	65	50	62	-0.062	13.12	0.4
64	10.221	10.167	0.16	0.16	1.29	72	3.12	1.01	72	2.3	86	0.099	101	100	8.6	-0.2	704	310	351	438	433	447	1151	406	63	48	65	50	62	-0.064	13.25	0.62
65	10.382	10.328	0.16	0.16	1.29	72	3.12	1.01	72	2.3	86	0.097	102	102	8.5	-0.1	705	309	352	440	435	448	1155	406	63	48	65	50	62	-0.063	13.25	0.77
66	10.543	10.488	0.16	0.16	1.29	73	3.13	1.01	73	2.3	87	0.098	101	101	8.4	-0.1	706	309	353	442	436	449	1159	406	64	49	65	50	63	-0.062	13.25	0.61
67	10.704	10.648	0.16	0.16	1.29	73	3.12	1.01	73	2.3	87	0.097	102	101	8.3	-0.1	707	308	355	445	438	451	1161	406	64	49	65	50	63	-0.061	13.26	0.38
68	10.864	10.809	0.16	0.16	1.29	73	3.12	1.01	73	2.3	86	0.097	101	102	8.1	-0.2	708	308	356	447	440	452	1162	405	64	49	65	50	62	-0.063	13.27	0.43
69	11.025	10.969	0.16	0.16	1.29	73	3.12	1.01	73	2.3	86	0.097	101	101	8.0	-0.1	708	307	357	450	442	453	1162	405	64	49	65	51	63	-0.062	13.2	0.47
70	11.187	11.129	0.16	0.16	1.30	73	3.12	1.01	73	2.3	87	0.098	102	101	7.9	-0.1	709	307	359	452	444	454	1163	405	64	49	65	51	63	-0.062	13.33	0.5
71	11.348	11.291	0.16	0.16	1.29	73	3.13	1.01	73	2.3	87	0.098	101	102	7.7	-0.2	710	307	360	454	446	455	1165	406	65	49	65	51	63	-0.062	13.39	0.6
72	11.509	11.450	0.16	0.16	1.29	73	3.12	1.01	73	2.3	86	0.098	101	100	7.6	-0.1	711	306	361	457	448	457	1166	408	65	49	65	51	62	-0.063	13.34	0.68
73	11.670	11.610	0.16	0.16	1.29	73	3.13	1.01	73	2.3	86	0.100	100	100	7.5	-0.1	711	306	362	459	450	458	1166	407	65	49	65	51	64	-0.063	13.39	0.74
74	11.831	11.771	0.16	0.16	1.29	73	3.13	1.01	73	2.3	87	0.099	100	101	7.3	-0.2	711	306	364	461	452	459	1165	407	65	49	65	51	63	-0.063	13.37	0.86
75	11.992	11.932	0.16	0.16	1.29	73	3.12	1.01	73	2.3	87	0.099	100	101	7.2	-0.1	711	306	366	464	454	460	1163	406	65	49	66	51	63	-0.062	13.27	0.8
76	12.154	12.091	0.16	0.16	1.30	73	3.12	1.01	73	2.3	87	0.097	102	101	7.1	-0.1	713	306	367	466	457	462	1162	407	65	49	66	51	63	-0.062	13.4	1
77	12.315	12.252	0.16	0.16	1.29	73	3.12	1.01	73	2.3	87	0.098	101	101	6.9	-0.2	714	306	369	467	459	463	1160	408	65	49	66	51	64	-0.062	13.33	1.02
78	12.476	12.413	0.16	0.16	1.29	73	3.13	1.01	73	2.3	87	0.100	100	100	6.8	-0.1	715	306	371	469	461	464	1159	407	65	49	66	51	63	-0.062	13.35	0.97
79	12.637	12.573	0.16	0.16	1.29	73	3.12	1.01	73	2.3	87	0.099	100	100	6.7	-0.1	715	306	373	471	464	466	1158	407	66	50	66	51	64	-0.063	13.26	0.93
80	12.798	12.733	0.16	0.16	1.30	73	3.13	1.01	73	2.3	87	0.098	101	101	6.5	-0.2	715	306	375	472	466	467	1158	407	66	50	66	51	64	-0.062	13.37	0.84
81	12.959	12.895	0.16	0.16	1.29	73	3.13	1.01	73	2.3	87	0.098	101	102	6.4	-0.1	715	306	376	473	468	468	1157	406	66	50	66	51	64	-0.060	13.31	0.73
82	13.121	13.055	0.16	0.16	1.30	73	3.13	1.01	73	2.3	87	0.098	102	101	6.3	-0.1	715	307	378	475	470	469	1155	406	66	50	66	51	64	-0.061	13.3	0.5
83	13.283	13.215	0.16	0.16	1.29	73	3.12	1.01	73	2.3	86	0.097	102	101	6.2	-0.1	715	306	380	476	472	470	1152	406	66	50	66	51	62	-0.060	13.28	0.41
84	13.444	13.376	0.16	0.16	1.29	73	3.13	1.01	74	2.3	87	0.100	100	100	6.0	-0.2	714	307	382	478	474	471	1150	404	66	50	66	52	64	-0.059	13.15	0.3

Wood Heater Test Data

u

Run: 4

Manufacturer: Kuma Stoves
Model: K-251
Tracking No.: 2464
Project No.: 0123WM014E
Test Date: 18-Apr-23
Beginning Clock Time: 12:29

Total Sampling Time: 254 min
Recording Interval: 1 min
Tunnel Diameter: 6
Background Sample Volume: 45.857 cubic feet

PM Control Modules: 335,336
Dilution Tunnel MW(dry): 29.00 lb/lb-mole
Dilution Tunnel MW(wet): 28.78 lb/lb-mole
Dilution Tunnel H2O: 2.00 percent
Dilution Tunnel Static: -0.300 "H2O
Tunnel Area: 0.19635 ft2
Pitot Tube Cp: 0.99

Avg. Tunnel Velocity: 18.37 ft/sec.
Initial Tunnel Flow: 207.6 scfm
Average Tunnel Flow: 207.6 scfm
Post-Test Leak Check (1st Hr): 0.000 cfm @ 4 in. Hg
Post-Test Leak Check (1): 0.001 cfm @ 4 in. Hg
Post-Test Leak Check (2): 0.000 cfm @ 4 in. Hg
Average Test Piece Fuel Moisture: 20.53 Dry Basis %

Technician Signature:_____

Meter Box Y Factor: 1.004 (1) 1.002 (2) 1.012 (Amb)

Export to PDF

Barometric Pressure:	Begin	Middle	End	Average
	29.96	29.96	29.97	29.96

Room Air Velocity, fpn
<50

OMNI Equipment Numbers: _____

Velocity Traverse Data

	Pt.1	Pt.2	Pt.3	Pt.4	Pt.5	Pt.6	Pt.7	Pt.8	Center	
Initial dP	0.070	0.092	0.084	0.050	0.058	0.088	0.094	0.072	0.098	"H2O
Temp:	79	79	80	80	80	80	80	80	79	°F

V_{strav} 18.37 ft/sec V_{scent} 20.96 ft/sec F_p 0.876

qwq

	Particulate Sampling Data														Fuel Weight (lb)		Temperature Data (°F)													Stack Gas Data		
Elapsed Time (min)	Gas Meter 1 (ft^3)	Gas Meter 2 (ft^3)	Sample Rate 1 (cfm)	Sample Rate 2 (cfm)	Orifice dH 1 ("H_2O)	Meter 1 Temp (°F)	Meter 1 Vacuum ("Hg)	Orifice dH 2 ("H_2O)	Meter 2 Temp (°F)	Meter 2 Vacuum ("Hg)	Dilution Tunnel (°F)	Dilution Tunnel Center dP	Pro. Rate 1	Pro. Rate 2	Scale Reading	Weight Change	Firebox Top	Firebox Bottom	Firebox Back	Firebox Left	Firebox Right	Avg. Stove Surface (Tot = ΔT)	Catalyst Exit	Stack	Filter 1	Dryer Exit 1	Filter 2	Dryer Exit 2	Ambient	Draft ("H_2O)	CO_2 (%)	CO (%)
85	13.605	13.536	0.16	0.16	1.29	73	3.13	1.01	74	2.3	86	0.097	101	101	5.9	-0.1	713	307	383	479	476	472	1147	402	66	50	66	52	63	-0.058	12.97	0.2
86	13.766	13.697	0.16	0.16	1.29	73	3.11	1.01	74	2.3	86	0.099	100	100	5.8	-0.1	712	307	385	480	478	472	1143	401	66	50	66	52	64	-0.058	12.94	0.16
87	13.928	13.858	0.16	0.16	1.29	73	3.13	1.01	74	2.3	86	0.098	102	101	5.7	-0.1	710	308	387	482	480	473	1138	399	66	50	66	52	64	-0.058	12.64	0.1
88	14.089	14.019	0.16	0.16	1.30	74	3.12	1.01	74	2.3	86	0.098	101	101	5.6	-0.1	706	308	389	483	482	474	1130	396	66	50	66	52	63	-0.057	12.11	0.05
89	14.251	14.179	0.16	0.16	1.28	74	3.09	1.01	74	2.3	86	0.097	102	101	5.5	-0.1	701	308	390	485	483	473	1120	392	66	50	66	52	63	-0.057	11.78	0.05
90	14.411	14.339	0.16	0.16	1.27	74	3.08	1.01	74	2.3	85	0.097	101	101	5.5	0	694	308	392	486	485	473	1109	389	66	50	66	52	62	-0.057	11.68	0.04
91	14.571	14.501	0.16	0.16	1.28	74	3.09	1.01	74	2.3	84	0.099	99	101	5.4	-0.1	688	309	393	487	486	473	1099	386	66	50	66	52	62	-0.056	11.38	0.04
92	14.731	14.661	0.16	0.16	1.28	74	3.09	1.01	74	2.3	85	0.095	102	102	5.3	-0.1	682	309	395	489	487	472	1088	383	66	50	66	52	62	-0.056	11.26	0.04
93	14.891	14.821	0.16	0.16	1.28	74	3.09	1.01	74	2.3	85	0.100	99	99	5.2	-0.1	675	309	396	490	488	472	1078	379	66	50	66	52	63	-0.055	11.09	0.04
94	15.052	14.983	0.16	0.16	1.28	74	3.09	1.01	74	2.3	84	0.097	101	102	5.1	-0.1	669	309	397	491	490	471	1069	376	66	50	66	52	63	-0.055	11.08	0.04
95	15.212	15.143	0.16	0.16	1.27	74	3.08	1.01	74	2.3	84	0.099	99	100	5.0	-0.1	663	310	398	492	491	471	1060	373	66	50	66	52	62	-0.055	10.82	0.04
96	15.372	15.303	0.16	0.16	1.27	74	3.09	1.02	74	2.3	83	0.099	99	100	5.0	0	657	310	400	493	492	470	1052	370	66	50	66	52	63	-0.054	10.72	0.04
97	15.532	15.465	0.16	0.16	1.27	74	3.08	1.01	74	2.3	84	0.100	99	100	4.9	-0.1	651	311	400	494	492	470	1043	367	66	50	65	52	62	-0.053	10.66	0.04
98	15.692	15.626	0.16	0.16	1.27	74	3.08	1.01	74	2.3	83	0.097	100	101	4.8	-0.1	645	311	401	495	493	469	1036	365	66	50	65	52	62	-0.054	10.48	0.04
99	15.853	15.786	0.16	0.16	1.27	74	3.09	1.01	74	2.3	83	0.099	100	100	4.8	0	639	312	402	496	494	469	1028	362	66	50	66	52	63	-0.053	10.28	0.04
100	16.013	15.946	0.16	0.16	1.28	74	3.1	1.01	74	2.3	83	0.099	99	100	4.7	-0.1	633	312	402	496	494	467	1021	359	66	50	65	52	63	-0.053	10.1	0.04
101	16.173	16.108	0.16	0.16	1.27	74	3.08	1.01	74	2.3	83	0.100	99	100	4.6	-0.1	628	312	403	497	494	467	1014	356	66	50	65	52	63	-0.052	9.92	0.04
102	16.333	16.268	0.16	0.16	1.28	74	3.09	1.01	74	2.3	83	0.099	99	100	4.6	0	622	312	404	497	494	466	1007	355	66	50	65	52	64	-0.052	9.9	0.04
103	16.494	16.429	0.16	0.16	1.28	74	3.1	1.01	74	2.3	83	0.098	100	101	4.5	-0.1	617	312	404	497	494	465	1000	352	66	50	65	52	63	-0.052	9.73	0.04
104	16.654	16.591	0.16	0.16	1.27	74	3.09	1.02	74	2.3	81	0.099	99	101	4.4	-0.1	611	313	404	498	494	464	993	351	66	50	65	52	62	-0.053	9.63	0.04
105	16.814	16.751	0.16	0.16	1.27	74	3.08	1.01	74	2.3	81	0.099	99	99	4.4	0	606	313	404	498	494	463	986	349	66	50	65	52	62	-0.052	9.58	0.04
106	16.974	16.911	0.16	0.16	1.28	74	3.09	1.01	74	2.3	81	0.098	100	100	4.3	-0.1	601	313	404	498	493	462	979	347	66	50	65	52	62	-0.051	9.56	0.04
107	17.134	17.073	0.16	0.16	1.27	74	3.09	1.01	74	2.3	81	0.099	99	101	4.3	0	597	314	404	499	493	461	972	345	66	50	65	52	62	-0.052	9.52	0.04
108	17.296	17.234	0.16	0.16	1.28	74	3.08	1.01	74	2.3	81	0.099	100	100	4.2	-0.1	592	314	405	499	493	461	966	342	66	50	65	52	62	-0.051	9.46	0.04
109	17.456	17.395	0.16	0.16	1.28	74	3.09	1.01	74	2.3	81	0.101	98	99	4.2	0	588	315	405	499	493	460	961	341	66	50	65	52	63	-0.051	9.45	0.04
110	17.616	17.555	0.16	0.16	1.27	74	3.09	1.01	74	2.3	82	0.100	99	99	4.1	-0.1	594	315	405	499	492	461	956	339	66	50	65	52	63	-0.050	9.46	0.04
111	17.776	17.717	0.16	0.16	1.28	74	3.08	1.02	74	2.3	81	0.099	99	101	4.1	0	591	315	405	499	492	460	951	338	66	50	65	52	63	-0.051	9.53	0.04
112	17.937	17.878	0.16	0.16	1.27	74	3.1	1.01	74	2.3	81	0.099	100	100	4.0	-0.1	587	316	405	499	492	460	947	335	66	50	65	52	64	-0.050	9.47	0.04
113	18.098	18.038	0.16	0.16	1.27	74	3.09	1.01	74	2.3	80	0.099	100	99	3.9	-0.1	583	316	405	499	492	459	942	334	66	50	65	52	62	-0.049	9.21	0.04
114	18.258	18.199	0.16	0.16	1.27	74	3.08	1.01	74	2.3	80	0.101	98	99	3.9	0	579	316	406	499	491	458	937	332	66	50	65	52	62	-0.050	9.16	0.04
115	18.418	18.361	0.16	0.16	1.27	74	3.09	1.01	74	2.3	79	0.100	98	100	3.9	0	575	316	406	499	491	457	931	330	66	50	65	52	63	-0.050	9.04	0.04
116	18.578	18.521	0.16	0.16	1.28	74	3.08	1.01	74	2.3	80	0.099	99	99	3.8	-0.1	571	316	407	499	491	457	925	329	66	50	65	52	63	-0.049	8.93	0.05
117	18.738	18.682	0.16	0.16	1.28	74	3.08	1.01	74	2.3	79	0.098	99	100	3.8	0	568	317	407	499	490	456	920	327	66	50	65	52	63	-0.049	8.97	0.05
118	18.900	18.844	0.16	0.16	1.28	74	3.09	1.01	74	2.3	80	0.100	100	100	3.7	-0.1	564	317	408	499	490	456	915	326	66	50	65	52	63	-0.048	8.87	0.05
119	19.060	19.004	0.16	0.16	1.27	74	3.08	1.00	74	2.3	79	0.098	99	100	3.7	0	561	318	408	499	490	455	911	325	66	50	65	52	62	-0.049	8.87	0.05
120	19.220	19.165	0.16	0.16	1.28	74	3.1	1.02	74	2.3	78	0.098	99	100	3.6	-0.1	558	318	408	499	489	454	907	323	66	50	65	52	62	-0.050	8.75	0.05
121	19.380	19.326	0.16	0.16	1.28	74	3.08	1.00	74	2.3	79	0.099	99	100	3.6	0	555	319	408	499	488	454	904	323	66	50	65	52	62	-0.049	8.67	0.06
122	19.541	19.486	0.16	0.16	1.28	74	3.09	0.99	74	2.3	78	0.101	98	98	3.5	-0.1	553	319	408	498	487	453	902	323	66	50	65	52	62	-0.049	8.65	0.06
123	19.702	19.646	0.16	0.16	1.28	74	3.08	1.00	74	2.3	78	0.097	100	100	3.5	0	550	320	408	498	486	452	900	323	66	50	65	52	62	-0.050	8.65	0.06
124	19.862	19.806	0.16	0.16	1.27	74	3.08	1.00	74	2.3	78	0.099	99	99	3.4	-0.1	548	320	408	498	486	452	898	321	66	50	65	52	62	-0.048	8.61	0.06
125	20.022	19.966	0.16	0.16	1.27	74	3.09	0.99	74	2.2	78	0.100	98	99	3.4	0	546	321	408	497	485	451	896	321	66	50	65	52	62	-0.049	8.58	0.06
126	20.183	20.125	0.16	0.16	1.28	74	3.1	1.00	74	2.3	78	0.100	99	98	3.3	-0.1	545	321	407	497	484	451	894	320	65	50	65	52	62	-0.048	8.55	0.06
127	20.343	20.285	0.16	0.16	1.28	74	3.1	1.00	74	2.3	78	0.098	99	100	3.3	0	543	322	407	497	483	450	892	320	65	50	65	52	62	-0.049	8.51	0.07
128	20.504	20.446	0.16	0.16	1.28	74	3.08	1.00	74	2.3	78	0.099	99	100	3.3	0	541	322	407	496	482	450	891	320	66	50	65	52	62	-0.048	8.45	0.07

Wood Heater Test Data

u

Run: 4

Manufacturer: Kuma Stoves
Model: K-251
Tracking No.: 2464
Project No.: 0123WM014E
Test Date: 18-Apr-23
Beginning Clock Time: 12:29

Total Sampling Time: 254 min
Recording Interval: 1 min
Tunnel Diameter: 6
Background Sample Volume: 45.857 cubic feet

PM Control Modules: 335,336
Dilution Tunnel MW(dry): 29.00 lb/lb-mole
Dilution Tunnel MW(wet): 28.78 lb/lb-mole
Dilution Tunnel H2O: 2.00 percent
Dilution Tunnel Static: -0.300 "H2O
Tunnel Area: 0.19635 ft2
Pitot Tube Cp: 0.99

Avg. Tunnel Velocity: 18.37 ft/sec.
Initial Tunnel Flow: 207.6 scfm
Average Tunnel Flow: 207.6 scfm
Post-Test Leak Check (1st Hr): 0.000 cfm @ 4 in. Hg
Post-Test Leak Check (1): 0.001 cfm @ 4 in. Hg
Post-Test Leak Check (2): 0.000 cfm @ 4 in. Hg
Average Test Piece Fuel Moisture: 20.53 Dry Basis %

Technician Signature:_____

Meter Box Y Factor: 1.004 (1) 1.002 (2) 1.012 (Amb)

Barometric Pressure:

Begin	Middle	End	Average
29.96	29.96	29.97	29.96

Room Air Velocity, fpn
<50

OMNI Equipment Numbers: _____

Velocity Traverse Data

	Pt.1	Pt.2	Pt.3	Pt.4	Pt.5	Pt.6	Pt.7	Pt.8	Center	
Initial dP	0.070	0.092	0.084	0.050	0.058	0.088	0.094	0.072	0.098	"H2O
Temp:	79	79	80	80	80	80	80	80	79	°F

V_{strav} 18.37 ft/sec V_{scent} 20.96 ft/sec F_p 0.876

qwq

	Particulate Sampling Data														Fuel Weight (lb)		Temperature Data (°F)													Stack Gas Data		
Elapsed Time (min)	Gas Meter 1 (ft^3)	Gas Meter 2 (ft^3)	Sample Rate 1 (cfm)	Sample Rate 2 (cfm)	Orifice dH 1 ("H_2O)	Meter 1 Temp (°F)	Meter 1 Vacuum ("Hg)	Orifice dH 2 ("H_2O)	Meter 2 Temp (°F)	Meter 2 Vacuum ("Hg)	Dilution Tunnel (°F)	Dilution Tunnel Center dP	Pro. Rate 1	Pro. Rate 2	Scale Reading	Weight Change	Firebox Top	Firebox Bottom	Firebox Back	Firebox Left	Firebox Right	Avg. Stove Surface (Tot = ΔT)	Catalyst Exit	Stack	Filter 1	Dryer Exit 1	Filter 2	Dryer Exit 2	Ambient	Draft ("H_2O)	CO_2 (%)	CO (%)
129	20.665	20.605	0.16	0.16	1.28	74	3.08	1.00	74	2.3	78	0.100	99	98	3.2	-0.1	540	322	407	495	481	449	889	319	66	50	65	52	62	-0.048	8.46	0.07
130	20.825	20.765	0.16	0.16	1.28	74	3.09	1.00	74	2.3	78	0.097	100	100	3.2	0	538	323	407	495	480	449	887	318	66	50	65	52	62	-0.047	8.46	0.06
131	20.986	20.926	0.16	0.16	1.28	74	3.08	0.99	74	2.2	78	0.099	99	100	3.1	-0.1	536	324	407	494	479	448	884	317	65	50	65	52	62	-0.047	8.41	0.07
132	21.146	21.085	0.16	0.16	1.28	74	3.1	1.00	74	2.2	78	0.100	98	98	3.1	0	534	324	408	493	478	447	883	316	65	50	65	52	62	-0.047	8.4	0.07
133	21.307	21.245	0.16	0.16	1.28	74	3.1	1.00	74	2.3	78	0.099	99	99	3.0	-0.1	533	325	407	492	477	447	881	316	65	50	64	52	62	-0.047	8.39	0.07
134	21.468	21.405	0.16	0.16	1.28	74	3.08	1.00	74	2.2	78	0.102	98	98	3.0	0	532	325	407	492	476	446	879	315	65	50	64	52	62	-0.047	8.35	0.07
135	21.628	21.565	0.16	0.16	1.27	74	3.09	1.00	74	2.3	78	0.096	100	101	3.0	0	530	326	407	491	475	446	877	314	65	50	65	52	62	-0.047	8.39	0.07
136	21.789	21.725	0.16	0.16	1.28	74	3.09	1.00	74	2.3	78	0.101	98	98	2.9	-0.1	529	326	407	490	474	445	875	313	65	50	64	52	62	-0.047	8.39	0.07
137	21.949	21.885	0.16	0.16	1.28	74	3.09	1.00	74	2.3	77	0.099	99	99	2.9	0	527	327	407	489	473	445	873	313	65	50	64	52	62	-0.048	8.27	0.07
138	22.110	22.045	0.16	0.16	1.28	74	3.1	1.00	74	2.3	77	0.101	98	98	2.8	-0.1	525	328	407	489	472	444	871	312	65	50	64	52	61	-0.048	8.25	0.07
139	22.271	22.205	0.16	0.16	1.28	74	3.09	1.00	74	2.3	77	0.099	99	99	2.8	0	524	328	407	488	471	444	868	311	65	50	64	52	62	-0.047	8.2	0.07
140	22.432	22.365	0.16	0.16	1.27	74	3.08	0.99	74	2.3	77	0.100	99	99	2.8	0	522	329	407	488	470	443	866	311	65	50	64	52	62	-0.047	8.19	0.07
141	22.592	22.525	0.16	0.16	1.28	74	3.1	1.00	74	2.3	77	0.099	99	99	2.7	-0.1	521	330	407	487	469	443	864	309	65	50	64	52	61	-0.047	8.1	0.07
142	22.752	22.685	0.16	0.16	1.28	74	3.09	1.00	74	2.3	76	0.096	100	100	2.7	0	519	330	407	486	468	442	864	310	65	50	64	52	62	-0.047	8.12	0.07
143	22.913	22.845	0.16	0.16	1.29	74	3.09	1.00	74	2.3	77	0.095	101	101	2.7	0	518	331	407	485	468	442	863	309	65	50	64	52	62	-0.047	8	0.08
144	23.075	23.005	0.16	0.16	1.28	74	3.09	1.00	74	2.2	78	0.100	100	99	2.6	-0.1	517	332	407	484	467	441	862	308	65	50	64	52	62	-0.046	7.93	0.08
145	23.235	23.165	0.16	0.16	1.27	74	3.09	1.00	74	2.2	77	0.098	99	100	2.6	0	515	332	407	483	466	441	859	307	65	50	64	52	62	-0.047	7.91	0.07
146	23.395	23.325	0.16	0.16	1.28	74	3.08	1.00	74	2.2	77	0.094	101	102	2.5	-0.1	513	333	406	482	465	440	856	306	65	50	64	52	62	-0.046	7.88	0.07
147	23.556	23.485	0.16	0.16	1.28	74	3.1	1.00	74	2.3	77	0.099	99	99	2.5	0	511	333	407	482	464	439	852	305	65	50	64	52	62	-0.046	8.06	0.07
148	23.716	23.645	0.16	0.16	1.28	74	3.08	1.00	74	2.3	76	0.099	99	99	2.5	0	508	334	406	481	464	439	848	304	65	50	64	52	61	-0.046	8.05	0.06
149	23.878	23.806	0.16	0.16	1.29	74	3.1	1.00	74	2.2	76	0.099	100	100	2.5	0	506	335	406	480	463	438	845	303	65	50	64	52	61	-0.046	7.98	0.06
150	24.039	23.965	0.16	0.16	1.28	74	3.1	0.99	74	2.3	76	0.098	100	99	2.4	-0.1	504	336	406	480	462	438	841	302	65	50	64	52	62	-0.047	7.97	0.06
151	24.199	24.125	0.16	0.16	1.27	74	3.09	1.00	74	2.3	76	0.100	98	98	2.4	0	502	337	406	479	462	437	838	301	65	50	64	53	62	-0.046	7.95	0.06
152	24.360	24.286	0.16	0.16	1.28	74	3.1	1.00	74	2.3	76	0.100	99	99	2.4	0	500	337	405	479	461	436	835	300	65	50	64	53	61	-0.046	7.9	0.06
153	24.520	24.445	0.16	0.16	1.29	74	3.08	1.00	74	2.3	76	0.101	98	97	2.3	-0.1	498	338	406	478	460	436	831	299	65	50	64	52	61	-0.046	7.93	0.06
154	24.681	24.605	0.16	0.16	1.28	74	3.08	1.00	74	2.3	75	0.099	99	99	2.3	0	496	339	406	478	460	436	829	299	65	50	64	53	61	-0.046	7.89	0.06
155	24.843	24.766	0.16	0.16	1.28	74	3.1	1.00	74	2.3	75	0.098	100	100	2.3	0	494	340	405	478	459	435	826	298	65	50	64	53	62	-0.046	7.85	0.06
156	25.003	24.925	0.16	0.16	1.27	74	3.07	1.00	74	2.3	76	0.097	100	99	2.2	-0.1	493	340	406	477	459	435	824	297	65	50	64	53	61	-0.046	7.87	0.06
157	25.163	25.086	0.16	0.16	1.28	74	3.09	1.00	74	2.2	75	0.099	99	99	2.2	0	491	341	405	477	458	434	822	296	65	50	64	53	62	-0.046	7.89	0.06
158	25.323	25.246	0.16	0.16	1.28	74	3.09	1.00	74	2.2	75	0.093	102	102	2.2	0	490	342	406	477	458	435	820	296	65	50	64	52	62	-0.046	7.82	0.06
159	25.484	25.406	0.16	0.16	1.28	74	3.08	1.00	74	2.3	75	0.100	99	98	2.1	-0.1	488	343	406	476	457	434	819	296	64	50	64	53	61	-0.045	7.88	0.06
160	25.645	25.566	0.16	0.16	1.27	74	3.08	1.00	74	2.3	75	0.094	102	101	2.1	0	487	344	406	476	457	434	819	295	64	50	64	52	61	-0.046	7.85	0.06
161	25.805	25.727	0.16	0.16	1.27	74	3.09	0.99	74	2.3	75	0.095	101	102	2.1	0	486	345	406	475	456	434	819	294	64	50	64	53	61	-0.044	7.81	0.07
162	25.965	25.886	0.16	0.16	1.28	74	3.07	0.99	74	2.2	75	0.100	98	98	2.0	-0.1	486	346	406	475	456	434	819	294	64	50	64	53	62	-0.045	7.85	0.07
163	26.125	26.046	0.16	0.16	1.28	74	3.07	1.00	74	2.3	75	0.101	98	98	2.0	0	485	346	406	474	456	433	820	294	64	50	64	53	61	-0.045	7.82	0.07
164	26.286	26.207	0.16	0.16	1.28	74	3.08	1.00	74	2.2	75	0.096	101	101	2.0	0	485	347	405	474	455	433	821	294	64	50	64	53	61	-0.045	7.89	0.08
165	26.447	26.366	0.16	0.16	1.27	74	3.09	0.99	74	2.3	75	0.099	99	98	2.0	0	485	347	405	473	455	433	823	294	64	50	64	53	61	-0.044	7.86	0.09
166	26.607	26.526	0.16	0.16	1.27	74	3.08	1.00	74	2.3	75	0.092	102	103	1.9	-0.1	484	348	406	473	454	433	825	294	64	50	64	52	61	-0.045	7.71	0.08
167	26.767	26.687	0.16	0.16	1.28	74	3.07	0.99	74	2.2	75	0.091	103	104	1.9	0	483	349	405	472	454	433	824	294	64	50	64	53	61	-0.045	7.63	0.07
168	26.927	26.847	0.16	0.16	1.28	74	3.08	0.99	74	2.3	75	0.099	99	99	1.9	0	481	350	405	471	454	432	820	293	64	50	64	53	61	-0.044	7.62	0.07
169	27.087	27.006	0.16	0.16	1.28	74	3.08	1.00	74	2.2	75	0.090	103	103	1.8	-0.1	480	351	405	470	453	432	817	292	64	50	64	53	61	-0.045	7.6	0.07
170	27.249	27.167	0.16	0.16	1.28	74	3.08	1.00	74	2.2	74	0.099	100	99	1.8	0	478	352	405	469	453	431	814	291	64	50	64	53	61	-0.045	7.54	0.07
171	27.409	27.327	0.16	0.16	1.27	74	3.09	0.99	74	2.2	74	0.096	100	100	1.8	0	476	353	404	469	453	431	811	290	64	50	63	53	61	-0.044	7.5	0.07
172	27.569	27.486	0.16	0.16	1.27	74	3.07	1.00	74	2.2	74	0.094	101	101	1.8	0	474	353	403	468	452	430	809	289	64	50	63	52	61	-0.044	7.51	0.07

Wood Heater Test Data

u

Run: 4

Manufacturer: Kuma Stoves
Model: K-251
Tracking No.: 2464
Project No.: 0123WM014E
Test Date: 18-Apr-23
Beginning Clock Time: 12:29

Total Sampling Time: 254 min
Recording Interval: 1 min
Tunnel Diameter: 6
Background Sample Volume: 45.857 cubic feet

PM Control Modules: 335,336
Dilution Tunnel MW(dry): 29.00 lb/lb-mole
Dilution Tunnel MW(wet): 28.78 lb/lb-mole
Dilution Tunnel H2O: 2.00 percent
Dilution Tunnel Static: -0.300 "H2O
Tunnel Area: 0.19635 ft2
Pitot Tube Cp: 0.99

Avg. Tunnel Velocity: 18.37 ft/sec.
Initial Tunnel Flow: 207.6 scfm
Average Tunnel Flow: 207.6 scfm
Post-Test Leak Check (1st Hr): 0.000 cfm @ 4 in. Hg
Post-Test Leak Check (1): 0.001 cfm @ 4 in. Hg
Post-Test Leak Check (2): 0.000 cfm @ 4 in. Hg
Average Test Piece Fuel Moisture: 20.53 Dry Basis %

Technician Signature:_____

Meter Box Y Factor: 1.004 (1) 1.002 (2) 1.012 (Amb)

Export to PDF

Barometric Pressure:	Begin	Middle	End	Average
	29.96	29.96	29.97	29.96

Room Air Velocity, fpn
<50

OMNI Equipment Numbers: _____

Velocity Traverse Data

	Pt.1	Pt.2	Pt.3	Pt.4	Pt.5	Pt.6	Pt.7	Pt.8	Center	
Initial dP	0.070	0.092	0.084	0.050	0.058	0.088	0.094	0.072	0.098	"H2O
Temp:	79	79	80	80	80	80	80	80	79	°F

V_{strav} 18.37 ft/sec V_{scent} 20.96 ft/sec F_p 0.876

qwq

	Particulate Sampling Data														Fuel Weight (lb)		Temperature Data (°F)													Stack Gas Data		
Elapsed Time (min)	Gas Meter 1 (ft^3)	Gas Meter 2 (ft^3)	Sample Rate 1 (cfm)	Sample Rate 2 (cfm)	Orifice dH 1 ("H_2O)	Meter 1 Temp (°F)	Meter 1 Vacuum ("Hg)	Orifice dH 2 ("H_2O)	Meter 2 Temp (°F)	Meter 2 Vacuum ("Hg)	Dilution Tunnel (°F)	Dilution Tunnel Center dP	Pro. Rate 1	Pro. Rate 2	Scale Reading	Weight Change	Firebox Top	Firebox Bottom	Firebox Back	Firebox Left	Firebox Right	Avg. Stove Surface (Tot = ΔT)	Catalyst Exit	Stack	Filter 1	Dryer Exit 1	Filter 2	Dryer Exit 2	Ambient	Draft ("H_2O)	CO_2 (%)	CO (%)
173	27.729	27.647	0.16	0.16	1.28	74	3.08	1.00	74	2.3	74	0.097	99	100	1.7	-0.1	472	354	403	467	452	430	806	289	64	50	63	52	62	-0.045	7.55	0.07
174	27.889	27.807	0.16	0.16	1.28	74	3.09	0.99	74	2.2	74	0.098	99	99	1.7	0	471	354	402	467	452	429	804	288	64	50	63	53	61	-0.044	7.59	0.07
175	28.050	27.966	0.16	0.16	1.28	74	3.07	1.00	74	2.3	74	0.093	102	101	1.7	0	469	355	402	466	452	429	802	287	64	50	63	52	61	-0.044	7.45	0.07
176	28.210	28.127	0.16	0.16	1.27	74	3.09	1.00	74	2.2	74	0.098	99	100	1.7	0	467	356	402	465	451	428	800	286	64	50	63	52	61	-0.044	7.49	0.07
177	28.370	28.287	0.16	0.16	1.27	74	3.09	0.99	74	2.2	74	0.099	98	99	1.6	-0.1	466	357	401	465	451	428	798	285	64	50	63	53	62	-0.045	7.45	0.07
178	28.530	28.446	0.16	0.16	1.27	74	3.09	1.00	74	2.2	74	0.089	104	103	1.6	0	464	358	401	465	451	428	796	284	64	50	63	53	61	-0.044	7.48	0.07
179	28.691	28.607	0.16	0.16	1.28	74	3.08	1.00	74	2.2	74	0.100	99	99	1.6	0	463	359	401	464	450	427	794	284	64	50	63	52	61	-0.044	7.39	0.07
180	28.851	28.767	0.16	0.16	1.27	74	3.07	0.99	74	2.2	74	0.097	99	100	1.6	0	461	360	401	463	450	427	792	283	64	50	63	52	61	-0.044	7.39	0.07
181	29.011	28.926	0.16	0.16	1.27	74	3.09	1.00	74	2.3	74	0.096	100	100	1.5	-0.1	460	361	401	463	450	427	791	283	64	50	63	52	62	-0.044	7.36	0.07
182	29.172	29.086	0.16	0.16	1.28	74	3.07	0.99	74	2.3	74	0.100	99	98	1.5	0	458	362	400	463	449	426	789	282	64	50	63	52	61	-0.044	7.37	0.07
183	29.332	29.247	0.16	0.16	1.27	74	3.09	0.99	74	2.3	74	0.099	98	99	1.5	0	457	362	399	463	449	426	787	282	64	50	63	52	61	-0.043	7.36	0.07
184	29.492	29.406	0.16	0.16	1.28	74	3.08	1.00	74	2.3	74	0.095	101	100	1.5	0	456	363	400	462	448	426	786	281	64	50	63	52	61	-0.043	7.28	0.07
185	29.653	29.566	0.16	0.16	1.28	74	3.08	0.99	74	2.2	74	0.102	98	97	1.5	0	455	364	400	462	448	426	784	281	64	50	63	52	62	-0.043	7.23	0.07
186	29.813	29.727	0.16	0.16	1.27	74	3.09	0.99	74	2.3	74	0.098	99	100	1.4	-0.1	453	365	399	461	447	425	782	280	64	50	63	52	61	-0.043	7.21	0.07
187	29.973	29.886	0.16	0.16	1.27	74	3.09	1.00	74	2.2	74	0.098	99	99	1.4	0	452	366	400	461	447	425	779	279	64	50	63	52	61	-0.044	7.17	0.07
188	30.133	30.046	0.16	0.16	1.28	74	3.07	1.00	74	2.3	74	0.095	101	101	1.4	0	450	367	400	461	446	425	777	279	64	50	63	52	62	-0.042	7.16	0.07
189	30.294	30.207	0.16	0.16	1.26	74	3.09	0.99	74	2.3	75	0.096	101	101	1.4	0	449	367	400	460	446	424	774	277	64	50	63	52	62	-0.043	7.31	0.06
190	30.454	30.366	0.16	0.16	1.27	74	3.07	0.99	74	2.3	74	0.099	98	98	1.3	-0.1	447	368	400	459	445	424	772	276	64	50	63	52	61	-0.043	7.28	0.06
191	30.614	30.526	0.16	0.16	1.27	74	3.09	1.00	74	2.2	74	0.096	100	100	1.3	0	446	368	400	459	444	423	771	276	64	50	63	52	61	-0.042	7.34	0.07
192	30.774	30.687	0.16	0.16	1.28	74	3.07	1.00	74	2.3	74	0.092	102	103	1.3	0	445	369	400	458	444	423	769	275	64	50	63	52	61	-0.042	7.34	0.07
193	30.934	30.846	0.16	0.16	1.28	74	3.09	1.00	74	2.3	74	0.097	99	99	1.3	0	444	370	401	458	443	423	769	275	64	50	63	52	61	-0.042	7.3	0.07
194	31.095	31.006	0.16	0.16	1.28	74	3.08	1.00	74	2.3	75	0.100	99	98	1.2	-0.1	443	371	400	458	442	423	768	274	64	50	63	52	62	-0.041	7.3	0.07
195	31.256	31.167	0.16	0.16	1.27	74	3.08	0.99	74	2.2	75	0.098	100	100	1.2	0	443	371	401	457	442	423	767	274	64	50	63	52	61	-0.042	7.34	0.07
196	31.415	31.326	0.16	0.16	1.27	74	3.09	0.99	74	2.3	74	0.099	98	98	1.2	0	442	372	400	457	442	423	767	274	64	50	63	52	62	-0.042	7.32	0.07
197	31.575	31.486	0.16	0.16	1.27	74	3.07	1.00	74	2.3	74	0.091	103	103	1.2	0	441	372	400	457	441	422	766	274	64	50	63	52	62	-0.042	7.35	0.07
198	31.736	31.646	0.16	0.16	1.28	74	3.08	0.99	74	2.3	74	0.098	100	99	1.2	0	441	372	401	456	440	422	765	274	64	50	63	52	62	-0.043	7.34	0.07
199	31.897	31.806	0.16	0.16	1.27	74	3.09	0.99	74	2.2	74	0.093	102	102	1.1	-0.1	440	372	400	456	440	422	765	274	64	50	63	52	61	-0.042	7.29	0.07
200	32.057	31.966	0.16	0.16	1.28	74	3.08	1.00	74	2.2	74	0.100	98	98	1.1	0	439	373	401	456	440	422	764	274	64	50	63	52	61	-0.042	7.3	0.07
201	32.217	32.126	0.16	0.16	1.27	74	3.08	1.00	74	2.3	74	0.098	99	99	1.1	0	439	373	401	455	439	421	763	273	64	50	63	52	62	-0.041	7.3	0.07
202	32.377	32.286	0.16	0.16	1.28	74	3.08	0.99	74	2.3	74	0.096	100	100	1.1	0	438	374	401	455	439	421	763	273	64	50	63	52	62	-0.042	7.25	0.07
203	32.537	32.446	0.16	0.16	1.28	74	3.09	1.00	74	2.2	74	0.098	99	99	1.1	0	438	374	401	454	438	421	762	273	64	50	63	52	62	-0.042	7.18	0.07
204	32.699	32.606	0.16	0.16	1.27	74	3.09	0.99	74	2.3	74	0.098	100	99	1.0	-0.1	437	375	401	454	438	421	761	273	64	50	63	52	61	-0.042	7.14	0.07
205	32.859	32.766	0.16	0.16	1.27	74	3.08	1.00	74	2.2	74	0.089	104	104	1.0	0	436	375	401	453	437	420	759	272	64	50	63	52	62	-0.041	7.17	0.07
206	33.019	32.926	0.16	0.16	1.28	74	3.08	1.00	74	2.3	74	0.088	104	105	1.0	0	435	376	401	453	437	420	758	271	64	50	63	52	62	-0.042	7.1	0.07
207	33.179	33.087	0.16	0.16	1.28	74	3.09	1.00	74	2.3	74	0.087	105	106	1.0	0	435	376	401	453	436	420	757	271	64	50	63	52	62	-0.042	7.14	0.07
208	33.339	33.246	0.16	0.16	1.28	74	3.08	1.00	74	2.2	74	0.094	101	101	0.9	-0.1	434	377	402	452	436	420	757	271	64	50	63	52	62	-0.041	7.15	0.07
209	33.500	33.406	0.16	0.16	1.28	74	3.08	0.99	74	2.3	74	0.091	103	103	0.9	0	433	378	402	452	435	420	756	271	64	50	63	52	61	-0.042	7.08	0.07
210	33.661	33.567	0.16	0.16	1.27	74	3.09	0.99	74	2.2	74	0.091	103	104	0.9	0	433	378	401	452	435	420	755	271	64	50	63	52	62	-0.042	7.11	0.07
211	33.820	33.726	0.16	0.16	1.28	74	3.08	0.99	74	2.3	74	0.096	99	100	0.9	0	432	379	402	451	435	420	754	270	64	50	63	52	61	-0.042	6.93	0.06
212	33.981	33.886	0.16	0.16	1.28	74	3.09	0.99	74	2.2	74	0.099	99	99	0.9	0	431	379	401	451	434	419	752	270	64	50	63	52	62	-0.042	6.92	0.06
213	34.141	34.047	0.16	0.16	1.28	74	3.09	0.99	74	2.3	73	0.100	98	99	0.8	-0.1	430	380	401	450	434	419	750	270	64	50	63	52	62	-0.041	6.88	0.06
214	34.302	34.206	0.16	0.16	1.28	74	3.08	0.99	74	2.2	74	0.094	102	101	0.8	0	429	381	401	450	433	419	747	268	64	50	63	52	62	-0.041	6.81	0.06
215	34.462	34.366	0.16	0.16	1.27	74	3.08	0.99	74	2.2	74	0.100	98	98	0.8	0	428	382	401	449	433	419	744	268	64	50	63	52	61	-0.041	6.83	0.06
216	34.622	34.527	0.16	0.16	1.28	74	3.07	0.99	74	2.2	74	0.090	103	104	0.8	0	427	382	401	449	432	418	742	268	64	50	63	52	62	-0.041	6.89	0.06

Wood Heater Test Data

u

Run: 4

Manufacturer: Kuma Stoves
Model: K-251
Tracking No.: 2464
Project No.: 0123WM014E
Test Date: 18-Apr-23
Beginning Clock Time: 12:29

Total Sampling Time: 254 min
Recording Interval: 1 min
Tunnel Diameter: 6
Background Sample Volume: 45.857 cubic feet

PM Control Modules: 335,336
Dilution Tunnel MW(dry): 29.00 lb/lb-mole
Dilution Tunnel MW(wet): 28.78 lb/lb-mole
Dilution Tunnel H2O: 2.00 percent
Dilution Tunnel Static: -0.300 "H2O
Tunnel Area: 0.19635 ft2
Pitot Tube Cp: 0.99

Avg. Tunnel Velocity: 18.37 ft/sec.
Initial Tunnel Flow: 207.6 scfm
Average Tunnel Flow: 207.6 scfm
Post-Test Leak Check (1st Hr): 0.000 cfm @ 4 in. Hg
Post-Test Leak Check (1): 0.001 cfm @ 4 in. Hg
Post-Test Leak Check (2): 0.000 cfm @ 4 in. Hg
Average Test Piece Fuel Moisture: 20.53 Dry Basis %

Technician Signature:_____

Meter Box Y Factor: 1.004 (1) 1.002 (2) 1.012 (Amb)

Export to PDF

Barometric Pressure:	Begin	Middle	End	Average
	29.96	29.96	29.97	29.96

Room Air Velocity, fpn
<50

OMNI Equipment Numbers: _____

Velocity Traverse Data

	Pt.1	Pt.2	Pt.3	Pt.4	Pt.5	Pt.6	Pt.7	Pt.8	Center	
Initial dP	0.070	0.092	0.084	0.050	0.058	0.088	0.094	0.072	0.098	"H2O
Temp:	79	79	80	80	80	80	80	80	79	°F

V_{strav} 18.37 ft/sec V_{scent} 20.96 ft/sec F_p 0.876

qwq

	Particulate Sampling Data														Fuel Weight (lb)		Temperature Data (°F)													Stack Gas Data		
Elapsed Time (min)	Gas Meter 1 (ft^3)	Gas Meter 2 (ft^3)	Sample Rate 1 (cfm)	Sample Rate 2 (cfm)	Orifice dH 1 ("H_2O)	Meter 1 Temp (°F)	Meter 1 Vacuum ("Hg)	Orifice dH 2 ("H_2O)	Meter 2 Temp (°F)	Meter 2 Vacuum ("Hg)	Dilution Tunnel (°F)	Dilution Tunnel Center dP	Pro. Rate 1	Pro. Rate 2	Scale Reading	Weight Change	Firebox Top	Firebox Bottom	Firebox Back	Firebox Left	Firebox Right	Avg. Stove Surface (Tot = ΔT)	Catalyst Exit	Stack	Filter 1	Dryer Exit 1	Filter 2	Dryer Exit 2	Ambient	Draft ("H_2O)	CO_2 (%)	CO (%)
217	34.782	34.686	0.16	0.16	1.28	74	3.09	0.99	74	2.3	73	0.099	98	98	0.8	0	426	383	400	448	432	418	740	267	64	50	63	52	61	-0.042	6.81	0.06
218	34.942	34.846	0.16	0.16	1.27	74	3.09	0.99	74	2.3	74	0.099	98	99	0.7	-0.1	425	384	401	448	431	418	739	267	64	50	63	52	62	-0.041	6.8	0.06
219	35.104	35.007	0.16	0.16	1.27	74	3.07	0.99	74	2.2	74	0.095	102	101	0.7	0	424	384	401	447	431	417	738	267	64	50	63	52	62	-0.041	6.84	0.06
220	35.264	35.166	0.16	0.16	1.27	74	3.08	0.99	74	2.3	74	0.098	99	99	0.7	0	423	384	402	446	430	417	736	266	64	50	63	52	62	-0.041	6.86	0.06
221	35.423	35.326	0.16	0.16	1.27	74	3.09	0.99	74	2.3	74	0.097	99	100	0.7	0	422	385	403	446	430	417	736	266	64	50	64	52	62	-0.041	6.72	0.06
222	35.583	35.487	0.16	0.16	1.28	74	3.09	0.99	74	2.3	73	0.097	99	100	0.7	0	421	386	401	445	429	416	734	266	64	50	63	52	61	-0.041	6.63	0.06
223	35.744	35.646	0.16	0.16	1.28	74	3.08	0.99	74	2.2	74	0.099	99	98	0.6	-0.1	420	387	403	444	428	416	732	266	64	50	63	52	62	-0.041	6.59	0.06
224	35.905	35.806	0.16	0.16	1.28	74	3.07	0.99	74	2.2	74	0.098	100	99	0.6	0	419	388	403	443	428	416	731	265	64	50	63	52	62	-0.041	6.57	0.07
225	36.065	35.967	0.16	0.16	1.27	74	3.08	0.99	74	2.3	74	0.098	99	100	0.6	0	418	389	403	442	427	416	729	265	64	50	63	52	62	-0.042	6.54	0.07
226	36.224	36.126	0.16	0.16	1.27	74	3.07	0.99	74	2.2	74	0.101	97	97	0.6	0	418	390	404	442	426	416	728	264	64	50	63	52	62	-0.041	6.55	0.06
227	36.385	36.286	0.16	0.16	1.27	74	3.09	0.99	74	2.3	73	0.099	99	99	0.6	0	417	391	403	441	426	416	726	264	64	50	64	52	62	-0.041	6.51	0.06
228	36.545	36.446	0.16	0.16	1.27	74	3.08	0.99	74	2.3	73	0.097	99	100	0.5	-0.1	415	392	404	440	425	415	725	264	64	50	63	52	62	-0.041	6.53	0.06
229	36.706	36.606	0.16	0.16	1.27	74	3.09	0.99	74	2.3	73	0.097	100	100	0.5	0	415	393	402	439	424	415	723	263	64	50	64	52	62	-0.041	6.5	0.07
230	36.866	36.765	0.16	0.16	1.27	74	3.07	0.99	74	2.3	73	0.097	99	99	0.5	0	414	395	404	439	424	415	722	263	64	50	63	52	62	-0.040	6.52	0.07
231	37.026	36.926	0.16	0.16	1.27	74	3.08	0.99	74	2.3	74	0.098	99	100	0.5	0	413	396	403	438	423	415	721	263	64	50	63	52	62	-0.041	6.56	0.07
232	37.186	37.086	0.16	0.16	1.27	74	3.08	0.99	74	2.3	74	0.100	98	98	0.5	0	412	397	403	437	422	414	720	262	64	50	63	52	62	-0.041	6.62	0.07
233	37.347	37.245	0.16	0.16	1.27	74	3.07	0.99	74	2.2	74	0.100	99	98	0.4	-0.1	411	399	403	436	422	414	719	262	64	50	63	52	62	-0.041	6.62	0.07
234	37.507	37.406	0.16	0.16	1.27	74	3.07	0.99	74	2.3	73	0.100	98	99	0.4	0	410	400	403	435	421	414	718	262	64	50	63	52	62	-0.041	6.64	0.07
235	37.667	37.565	0.16	0.16	1.27	74	3.09	0.99	74	2.3	73	0.100	98	98	0.4	0	410	402	403	434	420	414	718	262	64	50	63	52	62	-0.040	6.67	0.07
236	37.827	37.725	0.16	0.16	1.27	74	3.08	0.99	74	2.2	74	0.098	99	99	0.4	0	409	403	402	434	420	414	718	261	64	50	63	52	62	-0.040	6.67	0.07
237	37.987	37.886	0.16	0.16	1.28	74	3.08	0.99	74	2.3	73	0.098	99	100	0.4	0	409	404	403	433	419	414	717	261	64	50	63	52	62	-0.041	6.67	0.07
238	38.148	38.045	0.16	0.16	1.28	74	3.08	0.99	74	2.3	74	0.099	99	98	0.3	-0.1	408	405	404	432	418	413	717	261	64	50	63	52	62	-0.040	6.73	0.07
239	38.308	38.205	0.16	0.16	1.27	74	3.07	0.99	74	2.2	73	0.098	99	99	0.3	0	408	406	403	431	418	413	718	261	64	50	63	52	62	-0.041	6.63	0.07
240	38.468	38.365	0.16	0.16	1.27	74	3.08	0.99	74	2.3	74	0.098	99	99	0.3	0	408	408	404	431	417	414	718	261	64	50	63	52	62	-0.040	6.67	0.07
241	38.628	38.525	0.16	0.16	1.28	74	3.08	0.99	74	2.2	74	0.097	99	100	0.3	0	407	408	404	430	416	413	718	261	64	50	63	52	62	-0.040	6.65	0.07
242	38.788	38.685	0.16	0.16	1.28	74	3.09	0.99	74	2.3	73	0.098	99	99	0.3	0	407	409	404	429	416	413	719	262	64	50	63	52	62	-0.041	6.73	0.08
243	38.950	38.845	0.16	0.16	1.27	74	3.08	0.99	74	2.3	73	0.099	100	99	0.3	0	407	410	405	429	415	413	720	262	64	50	63	52	62	-0.040	6.67	0.08
244	39.110	39.005	0.16	0.16	1.27	74	3.07	0.99	74	2.3	73	0.099	98	99	0.2	-0.1	408	411	405	428	415	413	721	263	64	50	63	52	62	-0.041	6.73	0.08
245	39.269	39.164	0.16	0.16	1.27	74	3.09	0.99	74	2.3	73	0.098	98	99	0.2	0	408	412	405	427	414	413	722	263	64	50	63	52	62	-0.042	6.67	0.08
246	39.429	39.325	0.16	0.16	1.27	74	3.09	0.99	74	2.3	73	0.099	98	99	0.2	0	408	413	406	427	414	414	723	263	64	50	63	52	62	-0.041	6.63	0.08
247	39.590	39.485	0.16	0.16	1.27	74	3.08	0.99	74	2.2	73	0.096	101	100	0.2	0	409	414	406	426	413	414	724	264	64	50	63	52	62	-0.041	6.6	0.08
248	39.751	39.644	0.16	0.16	1.27	74	3.07	0.99	74	2.2	73	0.100	99	98	0.2	0	409	416	406	426	413	414	724	264	64	50	63	52	62	-0.041	6.54	0.08
249	39.911	39.805	0.16	0.16	1.27	74	3.09	0.99	74	2.3	73	0.099	98	99	0.1	-0.1	409	417	407	425	413	414	724	264	64	50	63	52	62	-0.041	6.55	0.08
250	40.071	39.965	0.16	0.16	1.27	74	3.07	0.99	74	2.3	73	0.100	98	98	0.1	0	409	418	406	424	412	414	724	264	64	50	63	52	62	-0.041	6.43	0.08
251	40.231	40.124	0.16	0.16	1.28	74	3.08	1.00	74	2.3	73	0.097	99	99	0.1	0	409	419	406	424	412	414	723	264	64	50	63	52	62	-0.041	6.3	0.08
252	40.391	40.284	0.16	0.16	1.28	74	3.08	0.99	74	2.3	73	0.098	99	99	0.1	0	409	419	406	423	412	414	723	264	64	50	63	52	62	-0.041	6.22	0.08
253	40.552	40.444	0.16	0.16	1.27	74	3.08	0.98	74	2.3	74	0.097	100	100	0.1	0	408	420	406	422	411	413	723	263	64	50	63	52	62	-0.041	6.28	0.09
254	40.712	40.604	0.16	0.16	1.27	74	3.09	0.99	74	2.3	73	0.099	98	99	0.0	-0.1	408	421	406	422	411	414	723	263	64	50	63	52	62	-0.042	6.22	0.09

Wood Heater Lab Data - ASTM E2780 / ASTM E2515

Manufacturer: Kuma Stoves
Model: K-251
Tracking No.: 2464
Project No.: 0123WM014E
Run #: 4
Date: 4/18/23

Equipment Numbers:

TRAIN 1 (First Hour emissions)

Sample Component	Reagent	Filter, Probe or Dish #	Weights		
			Final, mg	Tare, mg	Particulate, mg
B. Front filter catch	Filter	E882	119.0	117.4	1.6
C. Rear filter catch	Filter	E883	118.8	118.8	0.0
D. Probe catch*	Probe	OES3	114770.5	114770.0	0.5
E. Filter seals catch*	Seals	S478	3385.0	3385.0	0.0

Sub-Total Total Particulate, mg: 2.1

TRAIN 1 (Post First Hour Change-out)

Sample Component	Reagent	Filter, Probe or Dish #	Weights		
			Final, mg	Tare, mg	Particulate, mg
B. Front filter catch	Filter	E884	119.2	119.0	0.2
C. Rear filter catch	Filter	E885	119.3	119.4	-0.1
D. Probe catch*	Probe	11	114185.5	114185.3	0.2
E. Filter seals catch*	Seals	S479	3372.2	3372.2	0.0

Sub-Total Total Particulate, mg: 0.3

Train 1 Aggregate Total Particulate, mg: **2.4**

TRAIN 2

Sample Component	Reagent	Filter, Probe or Dish #	Weights		
			Final, mg	Tare, mg	Particulate, mg
A. Front filter catch	Filter	E886	119.9	118.4	1.5
B. Rear filter catch	Filter	E887	119.1	118.9	0.2
C. Probe catch*	Probe	83	117542.0	117541.8	0.2
D. Filter seals catch*	Seals	S480	3433.7	3433.5	0.2

Total Particulate, mg: **2.1**

AMBIENT

Sample Component	Reagent	Filter # or Probe #	Weights		
			Final, mg	Tare, mg	Particulate, mg
A. Front filter catch*	Filter	E888	119.1	119.1	0.0

Total Particulate, mg: **0.0**

*Particulate catch that results in a negative number, is assumed to be zero for probes and seals, negative numbers for filters are assumed to be part of the seal weight.

Component	Equations:
A. Front filter catch	Final (mg) - Tare (mg) = Particulate, mg
B. Rear filter catch	Final (mg) - Tare (mg) = Particulate, mg
C. Probe catch	Final (mg) - Tare (mg) = Particulate, mg

Technician Signature:_____

Wood Heater Test Results - ASTM E2780 / ASTM E2515

Manufacturer: Kuma Stoves
Model: K-251
Project No.: 0123WM014E
Tracking No.: 2464
Run: 4
Test Date: 04/18/23

Technician Signature:_____

Burn Rate	**1.52**	**kg/hr dry**
Average Tunnel Temperature	80	degrees Fahrenheit
Average Gas Velocity in Dilution Tunnel - vs	18.37	feet/second
Average Gas Flow Rate in Dilution Tunnel - Qsd	12457.2	dscf/hour
Average Delta p	0.098	inches H20
Total Time of Test	254	minutes

	AMBIENT		SAMPLE TRAIN 1		SAMPLE TRAIN 2		FIRST HOUR FILTER (TRAIN 1)	
Total Sample Volume - Vm	45.857	cubic feet	40.712	cubic feet	40.604	cubic feet	9.579	cubic feet
Average Gas Meter Temperature	62	degrees Fahrenheit	73	degrees Fahrenheit	73	degrees Fahrenheit	69	degrees Fahrenheit
Total Sample Volume (Standard Conditions) - Vmstd	46.997	dscf	40.693	dscf	40.474	dscf	9.647	dscf
Total Particulates - m_n	0	mg	2.4	mg	2.1	mg	2.1	mg
Particulate Concentration (dry-standard) - C_r/C_s	0.000000	grams/dscf	0.00006	grams/dscf	0.00005	grams/dscf	0.00022	grams/dscf
Total Particulate Emissions - E_T	0.00	grams	3.11	grams	2.74	grams	2.71	grams
Particulate Emission Rate	0.00	grams/hour	0.73	grams/hour	0.65	grams/hour	2.71	grams/hour
Emissions Factor			0.48	g/kg	0.43	g/kg	0.91	g/kg
Difference from Average Total Particulate Emissions			0.19	grams	0.19	grams		

Final Average Results		
Complete Test Run		
Total Particulate Emissions - E_T	2.92	grams
Particulate Emission Rate	**0.69**	**grams/hour**
Emissions Factor	0.45	grams/kg
First Hour Emissions		
Total Particulate Emissions - E_T	2.71	grams
Particulate Emission Rate	2.71	grams/hour
Emissions Factor	0.91	grams/kg
7.5% of Average Total Particulate Emissions	0.22	grams

Quality Checks	Requirement	Measured / Observed: First Hour	Train 1	Train 2	Complies?
Filter Temps, °F	< 90	67	67	66	OK
Filter Face Velocity, fpm	< 30	8.62	8.68	8.68	OK
Dryer Exit Temp, °F	< 80	48	50	53	OK
Leakage Rate, cfm < 4% of avg sample rate or < 0.01 cfm, lesser of the two	0.01	0.000	0.001	0.000	OK
Neg. Probe Weight	=> 0	0.5	0.2	0.2	OK
Pro-Rate Variation	< 90 for < 10% of θ	0.00%	0.00%	0.00%	OK
	> 110 for < 10% of θ	0.00%	0.00%	0.00%	OK
	# Readings < 80%	0	0	0	OK
	# Readings > 120%	0	0	0	OK
Ambient Temp, °F (min / max)	< 55	60			OK
	> 90	64			OK
Train Precision	(*A*) Within 7.5%	6.4%			OK
One of *A* or *B* must	(*B*) Within 0.5 g/kg	0.06			
Stove Surface ΔT	Within 125 °F	60			OK
Room Air Velocity	< 50 fpm	<50			OK

Wood Heater Lab Data - ASTM E2780 / ASTM E2515

Manufacturer: Kuma Stoves
Model: K-251
Tracking No.: 2464
Project No.: 0123WM014E
Run #: 4
Date: 4/18/23

Equipment Numbers:

Uncorrected

TRAIN 1 (First Hour emissions)

Sample Component	Reagent	Filter, Probe or Dish #	Weights		
			Final, mg	Tare, mg	Particulate, mg
B. Front filter catch	Filter	E882	119.0	117.4	1.6
C. Rear filter catch	Filter	E883	118.8	118.8	0.0
D. Probe catch*	Probe	OES3	114770.5	114770.0	0.5
E. Filter seals catch*	Seals	S478	3385.0	3385.0	0.0

Sub-Total Total Particulate, mg: 2.1

TRAIN 1 (Post First Hour Change-out)

Sample Component	Reagent	Filter, Probe or Dish #	Weights		
			Final, mg	Tare, mg	Particulate, mg
B. Front filter catch	Filter	E884	119.2	119.0	0.2
C. Rear filter catch	Filter	E885	119.3	119.4	0.0
D. Probe catch*	Probe	11	114185.5	114185.3	0.2
E. Filter seals catch*	Seals	S479	3372.2	3372.2	0.0

Sub-Total Total Particulate, mg: 0.4

Train 1 Aggregate Total Particulate, mg: **2.5**

TRAIN 2

Sample Component	Reagent	Filter, Probe or Dish #	Weights		
			Final, mg	Tare, mg	Particulate, mg
A. Front filter catch	Filter	E886	119.9	118.4	1.5
B. Rear filter catch	Filter	E887	119.1	118.9	0.2
C. Probe catch*	Probe	83	117542.0	117541.8	0.2
D. Filter seals catch*	Seals	S480	3433.7	3433.5	0.2

Total Particulate, mg: **2.1**

AMBIENT

Sample Component	Reagent	Filter # or Probe #	Weights		
			Final, mg	Tare, mg	Particulate, mg
A. Front filter catch*	Filter	E888	119.1	119.1	0.0

Total Particulate, mg: **0.0**

*Particulate catch that results in a negative number, is assumed to be zero for probes and seals, negative numbers for filters are assumed to be part of the seal weight.

Component	Equations:
A. Front filter catch	Final (mg) - Tare (mg) = Particulate, mg
B. Rear filter catch	Final (mg) - Tare (mg) = Particulate, mg
C. Probe catch	Final (mg) - Tare (mg) = Particulate, mg

Technician Signature:_____

Wood Heater Test Results - ASTM E2780 / ASTM E2515

Manufacturer: Kuma Stoves
Model: K-251
Project No.: 0123WM014E
Tracking No.: 2464
Run: 4
Test Date: 04/18/23

Technician Signature:_____

Burn Rate	**1.52**	**kg/hr dry**
Average Tunnel Temperature	80	degrees Fahrenheit
Average Gas Velocity in Dilution Tunnel - vs	18.37	feet/second
Average Gas Flow Rate in Dilution Tunnel - Qsd	12457.2	dscf/hour
Average Delta p	0.098	inches H20
Total Time of Test	254	minutes

Uncorrected

	AMBIENT		SAMPLE TRAIN 1		SAMPLE TRAIN 2		FIRST HOUR FILTER (TRAIN 1)	
Total Sample Volume - Vm	45.857	cubic feet	40.712	cubic feet	40.604	cubic feet	9.579	cubic feet
Average Gas Meter Temperature	62	degrees Fahrenheit	73	degrees Fahrenheit	73	degrees Fahrenheit	69	degrees Fahrenheit
Total Sample Volume (Standard Conditions) - Vmstd	46.997	dscf	40.693	dscf	40.474	dscf	9.647	dscf
Total Particulates - m_n	0	mg	2.5	mg	2.1	mg	2.1	mg
Particulate Concentration (dry-standard) - C_r/C_s	0.000000	grams/dscf	0.00006	grams/dscf	0.00005	grams/dscf	0.00022	grams/dscf
Total Particulate Emissions - E_T	0.00	grams	3.24	grams	2.74	grams	2.71	grams
Particulate Emission Rate	0.00	grams/hour	0.77	grams/hour	0.65	grams/hour	2.71	grams/hour
Emissions Factor			0.50	g/kg	0.43	g/kg	0.91	g/kg
Difference from Average Total Particulate Emissions			0.25	grams	0.25	grams		

Final Average Results		
Complete Test Run		
Total Particulate Emissions - E_T	2.99	grams
Particulate Emission Rate	**0.71**	**grams/hour**
Emissions Factor	0.46	grams/kg
First Hour Emissions		
Total Particulate Emissions - E_T	2.71	grams
Particulate Emission Rate	2.71	grams/hour
Emissions Factor	0.91	grams/kg
7.5% of Average Total Particulate Emissions	0.22	grams

Quality Checks	Requirement	Measured / Observed: First Hour	Train 1	Train 2	Complies?
Filter Temps, °F	< 90	67	67	66	OK
Filter Face Velocity, fpm	< 30	8.62	8.68	8.68	OK
Dryer Exit Temp, °F	< 80	48	50	53	OK
Leakage Rate, cfm < 4% of avg sample rate or < 0.01 cfm, lesser of the two	0.01	0.000	0.001	0.000	OK
Neg. Probe Weight	=> 0	0.5	0.2	0.2	OK
Pro-Rate Variation	< 90 for < 10% of θ	0.00%	0.00%	0.00%	OK
	> 110 for < 10% of θ	0.00%	0.00%	0.00%	OK
	# Readings < 80%	0	0	0	OK
	# Readings > 120%	0	0	0	OK
Ambient Temp, °F (min / max)	< 55	60			OK
	> 90	64			OK
Train Precision One of *A* or *B* must	(*A*) Within 7.5%	8.4%			OK
	(*B*) Within 0.5 g/kg	0.08			
Stove Surface ΔT	Within 125 °F	60			OK
Room Air Velocity	< 50 fpm	<50			OK

VERSION: 2.4 4/15/2010

Manufacturer: Kuma Stoves
Model: K-251
Date: 4/18/2023
Run: 4
Control #: 2464
Test Duration: 254
Output Category: III

Appliance Type: Cat (Cat, Non-Cat, Pellet)

Temp. Units F (F or C)
Weight Units lb (kg or lb)

Default Fuel Values

	D. Fir	Oak
HHV (kJ/kg)	19,810	19,887
%C	48.73	50
%H	6.87	6.6
%O	43.9	42.9
%Ash	0.5	0.5

Fuel Data

	D. Fir	
HHV	19,810	kJ/kg
%C	48.73	
%H	6.87	
%O	43.9	
%Ash	0.5	

Wood Moisture (% wet): 17.03
Load Weight (lb wet): 17.10
Burn Rate (dry kg/h): 1.52
Total Particulate Emissions: 2.92 g

Note 1: For other fuels, use the heating value and fuel composition determined by analysis of fuel sample in accordance with Clause 9.2.

Note 2: In cases where the "Fuel Weight Remaining" is the same for three or more readings in a row, a "divide by zero error" will occur in the calculation sheet. In such cases, adjust the weight values by interpolation between the first occurence and the next reading showing a decrease in weight.

	Averages	0.19	9.06	#DIV/0!	330.90	61.93
					Temp. (ºF)	
Elapsed Time (min)	Fuel Weight Remaining (lb)	Flue Gas Composition (%) CO	CO_2	O_2	Flue Gas	Room Temp
0	17.10	0.31	3.10		403.0	61.0
1	17.00	0.34	2.18		424.0	62.0
2	16.90	0.42	4.68		363.0	61.0
3	16.80	0.07	6.36		348.0	61.0
4	16.70	0.08	6.77		351.0	60.0
5	16.60	0.07	7.33		354.0	60.0
6	16.40	0.05	8.59		358.0	61.0
7	16.30	0.04	8.46		361.0	61.0
8	16.20	0.04	8.20		363.0	61.0
9	16.10	0.06	9.71		367.0	61.0
10	16.00	0.09	9.82		372.0	61.0
11	15.80	0.04	9.61		376.0	61.0
12	15.70	0.06	10.11		378.0	61.0
13	15.60	0.05	9.61		380.0	61.0
14	15.50	0.05	9.06		381.0	61.0
15	15.30	0.05	8.63		381.0	62.0
16	15.20	0.04	8.63		381.0	62.0
17	15.10	0.28	11.57		387.0	61.0
18	14.90	0.09	10.57		388.0	61.0

19	14.80	0.06	9.76		389.0	61.0
20	14.70	0.05	9.51		387.0	61.0
21	14.50	0.05	8.98		385.0	62.0
22	14.40	0.05	8.43		381.0	61.0
23	14.30	0.05	8.61		379.0	62.0
24	14.20	0.05	8.95		377.0	62.0
25	14.10	0.04	9.30		377.0	61.0
26	14.00	0.07	9.45		376.0	61.0
27	13.80	0.07	8.97		377.0	62.0
28	13.70	0.18	10.12		379.0	61.0
29	13.60	0.30	11.13		383.0	61.0
30	13.50	0.24	11.06		385.0	62.0
31	13.30	0.13	10.66		387.0	62.0
32	13.20	0.12	10.64		387.0	61.0
33	13.10	0.10	9.57		386.0	62.0
34	13.00	0.07	8.82		383.0	62.0
35	12.90	0.06	8.88		382.0	62.0
36	12.70	0.06	8.98		379.0	62.0
37	12.60	0.05	9.95		378.0	62.0
38	12.50	0.12	11.30		381.0	62.0
39	12.40	0.37	12.47		386.0	62.0
40	12.20	0.35	12.78		391.0	62.0
41	12.10	0.36	13.02		394.0	62.0
42	11.90	0.48	13.18		398.0	62.0
43	11.80	0.81	12.96		401.0	63.0
44	11.60	0.47	12.85		402.0	62.0
45	11.50	0.70	13.01		404.0	63.0
46	11.30	0.81	13.06		406.0	62.0
47	11.10	1.21	13.22		407.0	62.0
48	11.00	1.44	13.31		410.0	62.0
49	10.80	1.68	13.29		413	62
50	10.60	1.66	13.31		414	62
51	10.50	1.56	13.33		413	62
52	10.30	1.53	13.42		414	62
53	10.20	1.34	13.43		415	61
54	10.00	1.08	13.33		415	62
55	9.90	0.8	13.15		414	63
56	9.70	0.48	12.95		411	63
57	9.60	0.39	12.71		409	63

58	9.40	0.28	12.53		407	62
59	9.30	0.22	12.57		405	61
60	9.20	0.32	12.5		403	63
61	9.10	0.28	12.86		404	62
62	8.90	0.36	13.05		404	62
63	8.80	0.4	13.12		405	62
64	8.60	0.62	13.25		406	62
65	8.50	0.77	13.25		406	62
66	8.40	0.61	13.25		406	63
67	8.30	0.38	13.26		406	63
68	8.10	0.43	13.27		405	62
69	8.00	0.47	13.2		405	63
70	7.90	0.5	13.33		405	63
71	7.70	0.6	13.39		406	63
72	7.60	0.68	13.34		408	62
73	7.50	0.74	13.39		407	64
74	7.30	0.86	13.37		407	63
75	7.20	0.8	13.27		406	63
76	7.10	1	13.4		407	63
77	6.90	1.02	13.33		408	64
78	6.80	0.97	13.35		407	63
79	6.70	0.93	13.26		407	64
80	6.50	0.84	13.37		407	64
81	6.40	0.73	13.31		406	64
82	6.30	0.5	13.3		406	64
83	6.20	0.41	13.28		406	62
84	6.00	0.3	13.15		404	64
85	5.90	0.2	12.97		402	63
86	5.80	0.16	12.94		401	64
87	5.70	0.1	12.64		399	64
88	5.60	0.05	12.11		396	63
89	5.50	0.05	11.78		392	63
90	5.50	0.04	11.68		389	62
91	5.40	0.04	11.38		386	62
92	5.30	0.04	11.26		383	62
93	5.20	0.04	11.09		379	63
94	5.10	0.04	11.08		376	63
95	5.00	0.04	10.82		373	62
96	5.00	0.04	10.72		370	63

97	4.90	0.04	10.66		367	62
98	4.80	0.04	10.48		365	62
99	4.80	0.04	10.28		362	63
100	4.70	0.04	10.1		359	63
101	4.60	0.04	9.92		356	63
102	4.60	0.04	9.9		355	64
103	4.50	0.04	9.73		352	63
104	4.40	0.04	9.63		351	62
105	4.40	0.04	9.58		349	62
106	4.30	0.04	9.56		347	62
107	4.30	0.04	9.52		345	62
108	4.20	0.04	9.46		342	62
109	4.20	0.04	9.45		341	63
110	4.10	0.04	9.46		339	63
111	4.10	0.04	9.53		338	63
112	4.00	0.04	9.47		335	64
113	3.90	0.04	9.21		334	62
114	3.90	0.04	9.16		332	62
115	3.90	0.04	9.04		330	63
116	3.80	0.05	8.93		329	63
117	3.80	0.05	8.97		327	63
118	3.70	0.05	8.87		326	63
119	3.70	0.05	8.87		325	62
120	3.60	0.05	8.75		323	62
121	3.60	0.06	8.67		323	62
122	3.50	0.06	8.65		323	62
123	3.50	0.06	8.65		323	62
124	3.40	0.06	8.61		321	62
125	3.40	0.06	8.58		321	62
126	3.30	0.06	8.55		320	62
127	3.30	0.07	8.51		320	62
128	3.30	0.07	8.45		320	62
129	3.20	0.07	8.46		319	62
130	3.20	0.06	8.46		318	62
131	3.10	0.07	8.41		317	62
132	3.10	0.07	8.4		316	62
133	3.00	0.07	8.39		316	62
134	3.00	0.07	8.35		315	62
135	3.00	0.07	8.39		314	62

136	2.90	0.07	8.39		313	62
137	2.90	0.07	8.27		313	62
138	2.80	0.07	8.25		312	61
139	2.80	0.07	8.2		311	62
140	2.80	0.07	8.19		311	62
141	2.70	0.07	8.1		309	61
142	2.70	0.07	8.12		310	62
143	2.70	0.08	8		309	62
144	2.60	0.08	7.93		308	62
145	2.60	0.07	7.91		307	62
146	2.50	0.07	7.88		306	62
147	2.50	0.07	8.06		305	62
148	2.50	0.06	8.05		304	61
149	2.50	0.06	7.98		303	61
150	2.40	0.06	7.97		302	62
151	2.40	0.06	7.95		301	62
152	2.40	0.06	7.9		300	61
153	2.30	0.06	7.93		299	61
154	2.30	0.06	7.89		299	61
155	2.30	0.06	7.85		298	62
156	2.20	0.06	7.87		297	61
157	2.20	0.06	7.89		296	62
158	2.20	0.06	7.82		296	62
159	2.10	0.06	7.88		296	61
160	2.10	0.06	7.85		295	61
161	2.10	0.07	7.81		294	61
162	2.00	0.07	7.85		294	62
163	2.00	0.07	7.82		294	61
164	2.00	0.08	7.89		294	61
165	2.00	0.09	7.86		294	61
166	1.90	0.08	7.71		294	61
167	1.90	0.07	7.63		294	61
168	1.90	0.07	7.62		293	61
169	1.80	0.07	7.6		292	61
170	1.80	0.07	7.54		291	61
171	1.80	0.07	7.5		290	61
172	1.80	0.07	7.51		289	61
173	1.70	0.07	7.55		289	62
174	1.70	0.07	7.59		288	61

175	1.70	0.07	7.45		287	61
176	1.70	0.07	7.49		286	61
177	1.60	0.07	7.45		285	62
178	1.60	0.07	7.48		284	61
179	1.60	0.07	7.39		284	61
180	1.60	0.07	7.39		283	61
181	1.50	0.07	7.36		283	62
182	1.50	0.07	7.37		282	61
183	1.50	0.07	7.36		282	61
184	1.50	0.07	7.28		281	61
185	1.50	0.07	7.23		281	62
186	1.40	0.07	7.21		280	61
187	1.40	0.07	7.17		279	61
188	1.40	0.07	7.16		279	62
189	1.40	0.06	7.31		277	62
190	1.30	0.06	7.28		276	61
191	1.30	0.07	7.34		276	61
192	1.30	0.07	7.34		275	61
193	1.30	0.07	7.3		275	61
194	1.20	0.07	7.3		274	62
195	1.20	0.07	7.34		274	61
196	1.20	0.07	7.32		274	62
197	1.20	0.07	7.35		274	62
198	1.20	0.07	7.34		274	62
199	1.10	0.07	7.29		274	61
200	1.10	0.07	7.3		274	61
201	1.10	0.07	7.3		273	62
202	1.10	0.07	7.25		273	62
203	1.10	0.07	7.18		273	62
204	1.00	0.07	7.14		273	61
205	1.00	0.07	7.17		272	62
206	1.00	0.07	7.1		271	62
207	1.00	0.07	7.14		271	62
208	0.90	0.07	7.15		271	62
209	0.90	0.07	7.08		271	61
210	0.90	0.07	7.11		271	62
211	0.90	0.06	6.93		270	61
212	0.90	0.06	6.92		270	62
213	0.80	0.06	6.88		270	62

214	0.80	0.06	6.81		268	62
215	0.80	0.06	6.83		268	61
216	0.80	0.06	6.89		268	62
217	0.80	0.06	6.81		267	61
218	0.70	0.06	6.8		267	62
219	0.70	0.06	6.84		267	62
220	0.70	0.06	6.86		266	62
221	0.70	0.06	6.72		266	62
222	0.70	0.06	6.63		266	61
223	0.60	0.06	6.59		266	62
224	0.60	0.07	6.57		265	62
225	0.60	0.07	6.54		265	62
226	0.60	0.06	6.55		264	62
227	0.60	0.06	6.51		264	62
228	0.50	0.06	6.53		264	62
229	0.50	0.07	6.5		263	62
230	0.50	0.07	6.52		263	62
231	0.50	0.07	6.56		263	62
232	0.50	0.07	6.62		262	62
233	0.40	0.07	6.62		262	62
234	0.40	0.07	6.64		262	62
235	0.40	0.07	6.67		262	62
236	0.40	0.07	6.67		261	62
237	0.40	0.07	6.67		261	62
238	0.30	0.07	6.73		261	62
239	0.30	0.07	6.63		261	62
240	0.30	0.07	6.67		261	62
241	0.30	0.07	6.65		261	62
242	0.30	0.08	6.73		262	62
243	0.30	0.08	6.67		262	62
244	0.20	0.08	6.73		263	62
245	0.20	0.08	6.67		263	62
246	0.20	0.08	6.63		263	62
247	0.20	0.08	6.6		264	62
248	0.20	0.08	6.54		264	62
249	0.10	0.08	6.55		264	62
250	0.10	0.08	6.43		264	62
251	0.10	0.08	6.3		264	62
252	0.10	0.08	6.22		264	62

253	0.10	0.09	6.28		263	62
254	0.00	0.09	6.22		263	62

OMNI-Test Laboratories, Inc.

Manufacturer:	Kuma Stoves
Model:	K-251
Date:	04/18/23
Run:	4
Control #:	2464
Test Duration:	254
Output Category:	III

Technicians: _____

_____

_____

Test Results in Accordance with CSA B415.1-10

	HHV Basis	LHV Basis
Overall Efficiency	76.2%	82.4%
Combustion Efficiency	98.2%	98.2%
Heat Transfer Efficiency	78%	83.9%

Output Rate (kJ/h)	22,959	21,779	**(Btu/h)**
Burn Rate (kg/h)	1.52	3.35	**(lb/h)**
Input (kJ/h)	30,124	28,576	**(Btu/h)**

Test Load Weight (dry kg)	6.44	14.19	**dry lb**
MC wet (%)	17.03		
MC dry (%)	20.53		
Particulate (g)	2.92		
CO (g)	182		
Test Duration (h)	4.23		

Emissions	**Particulate**	**CO**
g/MJ Output	0.03	1.87
g/kg Dry Fuel	0.45	28.28
g/h	0.69	43.00
lb/MM Btu Output	0.07	4.35

Air/Fuel Ratio (A/F)	12.04

VERSION: **2.4** **4/15/2010**

ASTM E2780 Wood Heater Run Sheets

Client: Kuma Project Number: 0123WM014E Run Number: 4
Model: K-251 Tracking Number: 2464 Date: 04/18/2023
Test Crew: Tony Tong
OMNI Equipment ID numbers: 00637, 20709, 00283A

ASTM E2515 Lab Sheet

Assembled By: Tony Tong

Date/Time in Dessicator: 04/18/2023, 17:00

	Weighing #1	Weighing #2	Weighing #3	Weighing #4	Weighing #5
Date/Time:	04/20/23 7:40	04/25/23 7:30	05/02/23 15:00		
R/H %:	7.9	12.3	10.6		
Temp:	66.0	67.1	71.7		
200 mg Audit:	200.1	200.0	200.0		
2 g Audit:	2000.3	2000.2	2000.3		
100 g Audit:	99997.9	99998.0	99997.8		
Initials:	TT	TT	TT		

Train	Element	ID #	Tare (mg)	Weight (mg)	Weight (mg)	Weight (mg)	Weight (mg)	Weight (mg)
A (First Hour)	Front Filter	E882	117.4	119.1	119.0			
	Rear Filter	E883	118.8	118.7	118.8			
	Probe	OES3	114770.3	114770.4	114770.7	114770.5		
	O-Ring Set	S478	3385.0	3385.6	3385.1	3385.0		
A (Remainder)	Front Filter	E884	119.0	119.2	119.2			
	Rear Filter	E885	119.4	119.2	119.3			
	Probe	11	114185.3	114185.5	114185.5			
	O-Ring Set	S479	3372.2	3372.6	3372.3	3372.2		
B	Front Filter	E886	118.4	120.0	119.9			
	Rear Filter	E887	118.9	119.1	119.1			
	Probe	83	117541.8	117541.9	117542.0			
	O-Ring Set	S480	3433.5	3434.3	3433.9	3433.7		
BG	Filter	E888	119.1	119.1	119.1			

Technician Signature: Tony Tong Date: 05/18/23

OMNI-Test Laboratories, Inc. **ASTM E2780 Wood Heater Run Sheets**

Client: Kuma Project Number: 0123WM014E Run Number: 4
Model: K-251 Tracking Number: 2464 Date: 04/18/2023
Test Crew: TT RT
OMNI Equipment ID numbers: 00335, 00336, 00596, 00185, 00322

Wood Heater Run Notes

Air Control Settings

Primary:

Air control set @ 1/2" from stop

Secondary: Fixed

Tertiary/Pilot: N/A

Fan: Fan off for first 15 min, then on low

Preburn Notes

Time	Notes
11:21	Recording preburn data @ 7.2 lbs, setting PAL at 1/2".
1228	At 3.6 lbs ~~to~~ preburn was stopped

Test Notes

Sketch test fuel configuration:

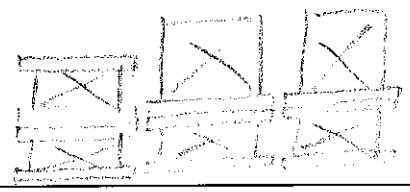

Start up procedures & Timeline:

Bypass: Used only to load fuel
Fuel loaded by: 60 seconds
Door closed at: 75 seconds
Primary air: At test setting

Notes:

Time	Notes
12:29	Test started
12:44	Fan setting on low
13:29	First hour filters change
1643	Test done

Technician Signature: [signature] Date: 04/18/2023

OMNI-Test Laboratories, Inc.

ASTM E2780 Wood Heater Run Sheets

Client: Kuma Project Number: 0123WM014E Run Number: 4
Model: K-251 Tracking Number: 2464 Date: 04/18/2023
Test Crew: Tom Tong, Riley Tiegs
OMNI Equipment ID numbers: 00594, 00410, 00716, 00721, 00255

Wood Heater Supplemental Data

Start Time: 12:29 Booth #: E1
Stop Time:

Stack Gas Leak Check:
Initial: good Final: good

Sample Train Leak Check: 1st hour 0.000 @ 4.00
A: 0.001 @ 4 "Hg
B: 0.000 @ 4 "Hg

Calibrations: Span Gas CO_2: 16.94% CO: 4.32% CO 500 ppm

	Pre Test		Post Test	
	Zero	Span	Zero	Span
Time	11:55 ~~10:40~~	11:58 ~~10:42~~	1647	1645
CO_2 %	0.00	16.93	0.000	16.93
CO %	0.00	4.34	-0.001	4.32
CO ppm	0.0	493		

Air Velocity (ft/min): Initial: <50 Final: <50
Scale Audit (lbs): Initial: 10 Final: 10
Pitot Tube Leak Test: Initial: good Final: good
Stack Diameter (in): 6
Induced Draft: 0.000
% Smoke Capture: 100
Flue Pipe Cleaned Prior to First Test in Series:
Date: 04/04/23 Initials: TT

	Initial	Middle	Ending
P_b (in/Hg)	29.96	29.96	2997
RH (%)	41	39	43
Ambient (°F)	61	62	62

Tunnel Traverse

Microtector Reading	dP (in H_2O)	T(°F)
1	0.070	79
2	0.092	79
3	0.084	80
4	0.050	80
5	0.058	80
6	0.088	80
7	0.094	80
8	0.072	80
Center:		
	0.099	79

Tunnel Static Pressure (in H_2O):	
Beginning of Test	End of Test
-0.30	-0.30

Background Filter Volume: 45.857

Technician Signature: Tom Tong Date: 04/18/2023

OMNI-Test Laboratories, Inc.

ASTM E2780 Wood Heater Run Sheets

Client: Kuma Project Number: 0123WM014E Run Number: 4
Model: K-251 Tracking Number: 2464 Date: 04/18/2023
Test Crew: Tony Tong
OMNI Equipment ID numbers: 00340, 00431, T61, 00353

Wood Heater Fuel Data

Fuel: Douglas fir, untreated and air dried, standard grade or better dimensional lumber

Pre-Burn Fuel

Calibration: Cal Value (1) = 12% Actual Reading 12.5
Cal Value (2) = 22% Actual Reading 22.7

Piece:	Length:	Reading:	Piece:	Length:	Reading:
1	12 in	20.2	7	16 in	23.8
2	12 in	21.4	8	in	
3	12 in	19.7	9	in	
4	12 in	21.5	10	in	
5	16 in	19.1	11	in	
6	16 in	21.5	12	in	

Total Pre-Burn Fuel Weight: 9.9 lbs Pre-Burn Fuel Average Moisture:

Time (clock): 9:40 Room Temperature (F): 60 Initials: TT

Test Fuel

Firebox Volume (ft³): 2.56 Test Fuel Piece Length (in): 17.25"
Load Weight Range (lb): (16.98, 19.74) Total Wet Fuel Load Weight (lb): 17.1 (3.42, 4.28)

Fuel Type & Amount: 2 x 4: 4 4 x 4: 2
Weight (with spacers): 8.2 Weight (with spacers): 8.9

Piece:	Weight (lbs):	Moisture Readings (%DB):				Fuel Type:
1	1.8	23.1	23.3	25.7		2x4
2	1.7	19.8	19.4	20.8		2x4
3	1.5	19.8	19.8	21.7		2x4
4	1.5	19.9	21.0	21.7		2x4
5	4.5	23.2	22.4	24.3		4x4
6	4.0	23.1	22.0	19.5		4x4
7						

2.3 2.2
2.1 2.1
1.9 1.9
1.9 1.9
4.7 4.6
4.2 4.2

Spacer Moisture Readings (%DB)

10.5	10.3	11.1	10.0	12.6	9.4	10.0	10.4
11.4	11.4	12.9	11.5	10.5	10.9	11.2	12.5
9.1	10.0	12.0	11.1				

Time (clock): 10:08 Room Temperature (F): 60 Initials: TT

Technician Signature: Tony Tong Date: 04/18/23

Run 5

Medium Low Burn (Category II)

Wood Heater Preburn Data - ASTM E2780

Run: 5

Technician Signature

Manufacturer: Kuma Stoves
Model: K-251
Tracking No.: 2464
Project No.: 0123WM014E
Test Date: 5/2/23
Beginning Clock Time: 10:07

Preburn Fuel Data

4 pieces @ 12 inches
3 pieces @ 16 inches
_____ pieces @ _____ inches

Fuel Moisture Readings (% DB):

19.5	21.2	19.5	19.2	20.6	24.7	23.8

Avg Preburn Moisture (% DB): **21.21**

Coal Bed Range (lb):	**3.7** (min)	**4.7** (max)

			Temperatures (°F)								
Elapsed Time (min)	Scale (lb)	Stack Draft (in H_2O)	FB Top	FB Bottom	FB Back	FB Left	FB Right	Cat Exit	Avg. FB	Stack	Ambient
0	9.2	-0.065	422	337	250	384	401	3218	358.8	420	70
1	9	-0.057	436	339	267	386	402	3218	365.9	357	70
2	9	-0.055	454	340	271	388	402	3218	371.1	329	70
3	8.9	-0.054	461	341	275	388	402	3218	373.4	313	70
4	8.9	-0.053	463	342	277	387	401	3218	373.9	302	70
5	8.8	-0.052	462	343	278	385	400	3218	373.4	291	70
6	8.8	-0.05	459	343	279	383	398	3218	372.4	284	70
7	8.7	-0.049	454	343	279	380	396	3218	370.7	277	70
8	8.7	-0.049	450	344	280	378	394	3218	369	271	69
9	8.7	-0.047	445	344	279	375	392	3218	367	266	70
10	8.6	-0.048	440	344	279	372	390	3218	365.1	261	69
11	8.6	-0.047	436	344	279	369	388	3218	363.1	258	69
12	8.6	-0.047	432	344	278	366	385	3218	361.2	255	69
13	8.5	-0.046	428	344	277	364	383	3218	359.3	253	69
14	8.5	-0.045	426	344	277	361	380	3218	357.5	251	69
15	8.5	-0.045	424	344	275	358	378	3218	355.8	251	69
16	8.4	-0.046	423	344	275	355	375	3218	354.5	250	69
17	8.4	-0.046	423	344	273	353	373	3218	353.2	250	69
18	8.3	-0.045	423	344	273	350	371	3218	352.1	249	69
19	8.3	-0.045	424	343	271	348	368	3218	351.1	250	69
20	8.3	-0.045	425	343	270	345	366	3218	350.2	250	69
21	8.2	-0.045	426	343	270	343	364	3218	349.2	250	69
22	8.2	-0.044	427	343	269	341	362	3218	348.1	250	69
23	8.2	-0.045	427	342	268	339	360	3218	347.1	250	69
24	8.2	-0.044	427	342	266	336	358	3218	345.8	250	69
25	8.1	-0.044	426	342	265	334	356	3218	344.7	249	69
26	8.1	-0.045	426	341	265	332	354	3218	343.7	248	69
27	8	-0.045	425	341	263	330	352	3218	342.4	248	69
28	8	-0.045	424	341	263	328	351	3218	341.3	247	69
29	8	-0.044	423	341	261	326	349	3218	340.1	247	69
30	7.9	-0.044	422	340	261	325	347	3218	339	246	69
31	7.9	-0.044	422	340	260	322	346	3218	338	245	69
32	7.9	-0.044	422	340	259	321	344	3218	337.1	245	69
33	7.8	-0.044	422	339	258	319	343	3218	336.3	246	69
34	7.8	-0.044	423	339	258	317	342	3218	335.7	246	69
35	7.8	-0.044	424	339	257	316	340	3218	335.3	247	69
36	7.7	-0.044	426	339	256	315	339	3218	334.8	247	69
37	7.7	-0.044	428	338	255	313	339	3218	334.7	248	69
38	7.6	-0.044	430	338	255	312	338	3218	334.4	250	69
39	7.6	-0.045	433	338	254	311	337	3218	334.6	251	69
40	7.5	-0.045	437	338	254	309	336	3218	334.8	252	69
41	7.5	-0.045	441	338	253	308	335	3218	335	254	69

Wood Heater Preburn Data - ASTM E2780

Run: 5

Technician Signature

Manufacturer: Kuma Stoves
Model: K-251
Tracking No.: 2464
Project No.: 0123WM014E
Test Date: 5/2/23
Beginning Clock Time: 10:07

Preburn Fuel Data

4 pieces @ 12 inches
3 pieces @ 16 inches
_____ pieces @ _____ inches

Fuel Moisture Readings (% DB):

19.5	21.2	19.5	19.2	20.6	24.7	23.8

Avg Preburn Moisture (% DB): **21.21**

Coal Bed Range (lb):	3.7 (min)	4.7 (max)

			Temperatures (°F)								
Elapsed Time (min)	Scale (lb)	Stack Draft (in H_2O)	FB Top	FB Bottom	FB Back	FB Left	FB Right	Cat Exit	Avg. FB	Stack	Ambient
42	7.5	-0.045	446	338	253	307	335	3218	335.6	256	69
43	7.4	-0.045	452	338	252	306	334	3218	336.3	257	69
44	7.4	-0.046	458	338	252	305	334	3218	337.3	260	69
45	7.3	-0.046	466	338	252	304	333	3218	338.4	263	69
46	7.3	-0.046	474	337	252	303	333	3218	339.7	265	69
47	7.2	-0.047	481	337	251	302	333	3218	340.8	268	69
48	7.2	-0.047	487	337	251	301	332	3218	341.9	270	69
49	7.1	-0.047	493	337	251	300	332	3218	342.6	271	69
50	7.1	-0.046	497	336	251	300	332	3218	343.2	272	69
51	7	-0.046	500	336	251	299	332	3218	343.7	273	69
52	7	-0.047	503	335	251	299	332	3218	344.1	273	69
53	6.9	-0.047	506	335	251	298	332	3218	344.5	275	69
54	6.9	-0.047	510	334	251	298	333	3218	345	276	69
55	6.8	-0.047	513	334	251	297	333	3218	345.6	276	69
56	6.8	-0.048	518	333	251	297	333	3218	346.6	278	69
57	6.7	-0.048	523	333	252	297	333	3218	347.5	279	69
58	6.7	-0.048	529	333	252	296	334	3218	348.6	281	69
59	6.6	-0.048	535	332	252	296	334	3218	349.9	282	69
60	6.5	-0.049	541	332	252	296	335	3218	351.2	285	69
61	6.5	-0.049	547	332	253	296	335	3218	352.6	286	69
62	6.4	-0.049	552	331	253	296	336	3218	353.5	287	69
63	6.4	-0.049	554	331	254	296	336	3218	354.1	287	69
64	6.3	-0.049	556	330	254	296	337	3218	354.7	288	69
65	6.3	-0.049	558	330	255	296	338	3218	355.3	288	69
66	6.2	-0.049	560	330	255	296	338	3218	355.8	289	69
67	6.2	-0.049	562	330	255	296	339	3218	356.5	289	69
68	6.1	-0.049	564	329	256	296	340	3218	357.2	289	69
69	6.1	-0.049	567	329	257	297	341	3218	358	289	69
70	6	-0.049	570	329	257	297	342	3218	358.8	290	69
71	6	-0.05	574	329	258	297	342	3218	359.8	291	69
72	5.9	-0.049	578	328	258	297	343	3218	361.1	292	69
73	5.8	-0.05	583	328	259	298	344	3218	362.3	294	69
74	5.8	-0.05	589	328	260	298	345	3218	363.8	296	69
75	5.7	-0.05	595	327	261	299	345	3218	365.5	296	69
76	5.7	-0.051	602	327	261	299	346	3218	367.2	298	69
77	5.6	-0.051	609	327	262	300	347	3218	369.2	300	69
78	5.5	-0.051	619	327	263	301	348	3218	371.4	301	69
79	5.5	-0.051	628	326	264	301	348	3218	373.7	303	69
80	5.4	-0.051	637	326	265	302	349	3218	376	305	69
81	5.3	-0.051	645	326	266	303	350	3218	377.9	305	69
82	5.3	-0.052	652	325	268	303	350	3218	379.6	306	69
83	5.2	-0.051	657	325	269	304	351	3218	381	308	69

Wood Heater Preburn Data - ASTM E2780

Run: 5

Technician Signature

Manufacturer: Kuma Stoves
Model: K-251
Tracking No.: 2464
Project No.: 0123WM014E
Test Date: 5/2/23
Beginning Clock Time: 10:07

Preburn Fuel Data

4 pieces @ 12 inches
3 pieces @ 16 inches
_____ pieces @ _____ inches

Fuel Moisture Readings (% DB):

19.5	21.2	19.5	19.2	20.6	24.7	23.8

Avg Preburn Moisture (% DB): **21.21**

Coal Bed Range (lb):	**3.7** (min)	**4.7** (max)

			Temperatures (°F)								
Elapsed Time (min)	Scale (lb)	Stack Draft (in H_2O)	FB Top	FB Bottom	FB Back	FB Left	FB Right	Cat Exit	Avg. FB	Stack	Ambient
84	5.2	-0.052	662	324	270	304	352	3218	382.3	308	69
85	5.1	-0.051	664	323	271	305	353	3218	383.2	308	69
86	5	-0.051	666	323	272	306	353	3218	383.9	308	69
87	5	-0.051	666	322	273	306	354	3218	384.4	308	69
88	4.9	-0.051	664	322	274	307	355	3218	384.6	306	69
89	4.8	-0.051	662	322	275	308	356	3218	384.6	306	69
90	4.8	-0.051	659	322	276	309	357	3218	384.4	305	69
91	4.7	-0.05	655	321	277	310	357	3218	384.1	304	69
92	4.7	-0.05	650	321	278	311	358	3218	383.6	302	69
93	4.7	-0.05	645	321	279	312	359	3218	383.1	300	69
94	4.6	-0.05	640	321	280	313	359	3218	382.4	299	69
95	4.6	-0.049	634	320	281	314	360	3218	381.8	298	69
96	4.5	-0.049	629	320	281	315	360	3218	381	295	69
97	4.5	-0.049	623	320	282	316	361	3218	380.3	294	69
98	4.4	-0.049	618	320	283	317	361	3218	379.6	293	69
99	4.4	-0.049	612	320	283	318	361	3218	379	292	69
100	4.3	-0.048	608	319	284	319	362	3218	378.4	290	69
101	4.3	-0.048	603	319	285	320	362	3218	377.8	289	69
102	4.2	-0.048	598	319	285	321	362	3218	377.4	288	69
103	4.2	-0.048	595	319	286	322	362	3218	377	287	69
104	4.2	-0.048	591	319	287	324	363	3218	376.7	286	69
105	4.1	-0.048	587	319	287	325	363	3218	376.3	285	69
106	4.1	-0.048	584	319	288	326	364	3218	375.9	283	69
107	4	-0.047	580	319	288	327	364	3218	375.5	282	69
108	4	-0.047	575	319	289	328	364	3218	374.9	282	69
109	4	-0.047	571	319	289	329	364	3218	374.4	279	69
110	3.9	-0.046	566	319	289	330	364	3218	373.7	278	69

Wood Heater Test Fuel Data - ASTM E2780

Manufacturer :	Kuma Stoves
Model :	K-251
Tracking No. :	2464
Project No. :	0123WM014E
Test Date :	5/2/2023
Run No. :	5

Moisture Meter Cal	
Cal Block	Measured
12.0	12.0
22.0	22.0

Firebox Volume :	2.56	ft3
% 2 x 4 Required :	35 - 65	%
Ideal Fuel Weight :	17.92	lb.
Minimum Fuel Weight :	16.13	lb.
Maximum Fuel Weight :	19.71	lb.

Fuel Piece Data

PC #	Weight, lb	Size	Length, In	Moisture Readings, Dry Basis %			Average MC, % db	Dry Weight, lb.	Volume, ft3	Wet Weights, lb 4 x 4	Wet Weights, lb 2 x 4	Dry Weights, lb 4 x 4	Dry Weights, lb 2 x 4
1	1.90	2x4	17.25	24.9	22.3	25.3	24.2	1.53	0.0524		1.9		1.53
2	1.90	2x4	17.25	22.6	24.5	26.7	24.6	1.52	0.0524		1.9		1.52
3	1.70	2x4	17.25	21.0	19.2	26.7	22.3	1.39	0.0524		1.7		1.39
4	1.80	2x4	17.25	26.3	20.9	23.8	23.7	1.46	0.0524		1.8		1.46
5	4.80	4x4	17.25	18.9	22.0	24.3	21.7	3.94	0.1223	4.8		3.94	
6	4.30	4x4	17.25	21.4	22.4	23.8	22.5	3.51	0.1223	4.3		3.51	
7													
8													
9													

Spacer Data

Moisture Readings, Dry Basis % (One reading per spacer)								
14.9	24.3	23.8	18.1	14.0	20.9	22.0	24.4	
23.8	22.0	19.0	22.7	24.9	21.9	15.0	23.8	
14.2	23.2	22.4	18.8					

Avg : 20.7

Assembled Crib Fuel Load with Spacers Attatched

PC #	Weight, lb with Spacers	Size	4 x 4s	2 x 4s
1	2.20	2x4		2.2000
2	2.30	2x4		2.3000
3	2.10	2x4		2.1000
4	2.40	2x4		2.4000
5	5.10	4x4	5.10	
6	4.60	4x4	4.60	
7				
8				
9				

Combined Mass of 4 x 4s	9.7	lb
Combined Mass of 2 x 4s	9.0	lb
Total Wet Mass of Fuel Load	**18.7**	lb

Fuel Load Properties

Type	Number of Pieces	Wet Weight, lb.	Dry Weight, lb.	Fuel Loading Density, lb/ft³ Wet Basis	Fuel Loading Density, lb/ft³ Dry Basis	Dry Fuel Density, lb/ft³	Wet Fuel Density, lb/ft³	Moisture, % Dry Basis	Moisture, % Wet Basis
2 x 4	4	7.3	5.90	7.30	5.96	29.40	36.11	22.56	18.40
4 x 4	2	9.1	7.45						
Spacers	20	2.3	1.91						
Totals		18.7	15.26						

Compliance Checks

	Fuel Load, Wet Lb.	Load Density, lb/ft³ of FB vol	Fuel Density, lb/ft³	% of Fuel load mass which is 2x4	Fuel Load Peices Mositure, % db
Measured	18.7	7.30	29.40	48	23.2
Required	16.1 - 19.7	6.3 - 7.7	25 - 36	35 - 65	19 -25
Complies ?	Yes	Yes	Yes	Yes	Yes

Wood Heater Test Data

u

Run: 5

Manufacturer: Kuma Stoves
Model: K-251
Tracking No.: 2464
Project No.: 0123WM014E
Test Date: 02-May-23
Beginning Clock Time: 11:58

Total Sampling Time: 382 min
Recording Interval: 1 min
Tunnel Diameter: 6
Background Sample Volume: 59.605 cubic feet

PM Control Modules: 335,336
Dilution Tunnel MW(dry): 29.00 lb/lb-mole
Dilution Tunnel MW(wet): 28.78 lb/lb-mole
Dilution Tunnel H2O: 2.00 percent
Dilution Tunnel Static: -0.280 "H2O
Tunnel Area: 0.19635 ft2
Pitot Tube Cp: 0.99

Avg. Tunnel Velocity: 18.62 ft/sec.
Initial Tunnel Flow: 212.2 scfm
Average Tunnel Flow: 208.3 scfm
Post-Test Leak Check (1st Hr): 0.000 cfm @ 15 in. Hg
Post-Test Leak Check (1): 0.001 cfm @ 14 in. Hg
Post-Test Leak Check (2): 0.000 cfm @ 10 in. Hg
Average Test Piece Fuel Moisture: 22.56 Dry Basis %

Technician Signature:_____

Meter Box Y Factor: 1.007 (1) 1.015 (2) 1.012 (Amb)

Export to PDF

Barometric Pressure:

Begin	Middle	End	Average
29.71		29.80	29.76

Room Air Velocity, fpn
<50

OMNI Equipment Numbers: _____

Velocity Traverse Data

	Pt.1	Pt.2	Pt.3	Pt.4	Pt.5	Pt.6	Pt.7	Pt.8	Center	
Initial dP	0.064	0.098	0.090	0.066	0.052	0.092	0.092	0.082	0.103	"H2O
Temp:	77	77	77	77	77	77	77	77	76	°F

V_{strav} 18.82 ft/sec V_{scent} 21.51 ft/sec F_p 0.875

qwq

	Particulate Sampling Data														Fuel Weight (lb)		Temperature Data (°F)													Stack Gas Data		
Elapsed Time (min)	Gas Meter 1 (ft^3)	Gas Meter 2 (ft^3)	Sample Rate 1 (cfm)	Sample Rate 2 (cfm)	Orifice dH 1 ("H_2O)	Meter 1 Temp (°F)	Meter 1 Vacuum ("Hg)	Orifice dH 2 ("H_2O)	Meter 2 Temp (°F)	Meter 2 Vacuum ("Hg)	Dilution Tunnel (°F)	Dilution Tunnel Center dP	Pro. Rate 1	Pro. Rate 2	Scale Reading	Weight Change	Firebox Top	Firebox Bottom	Firebox Back	Firebox Left	Firebox Right	Avg. Stove Surface (Tot = ΔT)	Catalyst Exit	Stack	Filter 1	Dryer Exit 1	Filter 2	Dryer Exit 2	Ambient	Draft ("H_2O)	CO_2 (%)	CO (%)
Tot / Avg	**61.30**	**61.22**	**0.16**	**0.16**	**1.25**	**81.05**	**3.05**	**0.99**	**81.06**	**1.49**	**81.51**	**0.10**	**100.01**	**100.00**		-18.7	523	323	321	357	359	**25**	843	272	72	57	71	58	72	(0.05)	2.46	0.09
Minimum			0.15	0.14	0.96	71.00	2.57	0.77	72.00	1.40	78.00	0.09	96.53	96.99	0.00	-0.200	367	286	224	285	284	304	654	204	67	50	68	52	69	(0.07)	1.04	0.02
Max			0.16	0.16	1.28	84.00	3.14	1.00	84.00	1.50	140.00	0.11	105.19	104.69	18.70	0.000	773	362	374	409	397	427	1099	450	73	58	72	60	73	(0.04)	3.86	0.33
0	0.000	0.000			0.96	71	2.57	0.77	72	1.4	100	0.102			18.7		546	336	294	332	365	375	852	425	67	54	68	55	69	-0.057	3.57	0.18
1	0.154	0.143	0.15	0.14	1.28	71	2.72	0.97	72	1.4	140	0.097	104	97	18.7	0	530	335	298	335	366	373	815	450	69	51	69	53	69	-0.068	1.04	0.06
2	0.314	0.300	0.16	0.16	1.28	71	2.73	0.97	72	1.4	99	0.100	103	101	18.6	-0.1	514	334	300	339	367	371	766	345	70	50	69	52	69	-0.050	2.09	0.33
3	0.474	0.456	0.16	0.16	1.28	71	2.72	0.97	72	1.4	92	0.096	105	102	18.5	-0.1	510	337	302	341	366	371	745	340	70	50	69	52	70	-0.055	2.04	0.13
4	0.635	0.612	0.16	0.16	1.28	71	2.7	0.96	72	1.4	88	0.099	103	100	18.4	-0.1	510	336	303	343	366	372	742	317	70	50	69	52	70	-0.054	2.14	0.06
5	0.796	0.768	0.16	0.16	1.28	72	2.71	0.96	72	1.4	86	0.095	105	102	18.3	-0.1	509	336	303	343	365	371	738	307	70	50	69	52	70	-0.054	2.01	0.03
6	0.955	0.925	0.16	0.16	1.26	72	2.7	0.98	72	1.4	84	0.101	100	99	18.3	0	504	335	302	343	363	369	731	300	70	50	69	52	70	-0.053	1.76	0.03
7	1.115	1.082	0.16	0.16	1.26	72	2.7	0.98	72	1.4	83	0.100	102	100	18.2	-0.1	501	335	301	342	361	368	722	295	70	50	69	52	69	-0.052	1.71	0.03
8	1.274	1.239	0.16	0.16	1.26	72	2.7	0.98	72	1.4	83	0.100	101	100	18.1	-0.1	495	334	299	340	359	365	713	291	70	50	69	52	70	-0.052	1.65	0.02
9	1.434	1.397	0.16	0.16	1.26	72	2.68	0.97	72	1.4	83	0.099	102	101	18.1	0	488	334	297	338	356	363	704	287	70	50	69	52	70	-0.050	1.7	0.03
10	1.593	1.554	0.16	0.16	1.26	72	2.68	0.97	72	1.4	82	0.099	101	100	18.0	-0.1	481	333	295	336	353	360	695	284	70	50	69	52	70	-0.051	1.64	0.03
11	1.752	1.711	0.16	0.16	1.26	72	2.69	0.97	72	1.4	82	0.099	101	100	18.0	0	474	332	293	334	351	357	688	281	70	50	69	52	69	-0.051	1.71	0.02
12	1.911	1.868	0.16	0.16	1.26	72	2.69	0.97	73	1.4	81	0.098	102	100	17.9	-0.1	468	332	290	332	348	354	681	279	70	50	69	52	69	-0.050	1.8	0.03
13	2.071	2.027	0.16	0.16	1.26	72	2.68	0.98	73	1.4	82	0.099	102	101	17.9	0	464	331	288	330	345	352	679	281	70	50	69	52	69	-0.051	1.95	0.03
14	2.231	2.185	0.16	0.16	1.25	73	2.68	0.99	73	1.4	82	0.101	101	100	17.8	-0.1	463	330	286	328	343	350	680	280	70	50	69	52	69	-0.051	2.27	0.04
15	2.389	2.343	0.16	0.16	1.25	73	2.68	0.98	73	1.4	81	0.102	99	99	17.7	-0.1	462	329	284	325	340	348	684	280	70	50	69	52	69	-0.051	1.86	0.05
16	2.548	2.502	0.16	0.16	1.25	73	2.69	0.98	73	1.4	82	0.102	100	100	17.7	0	458	328	282	323	337	346	690	276	70	50	70	52	69	-0.050	1.96	0.06
17	2.708	2.660	0.16	0.16	1.24	73	2.67	0.98	73	1.4	81	0.100	101	100	17.6	-0.1	454	327	280	321	335	343	687	272	70	50	70	52	69	-0.050	1.84	0.08
18	2.867	2.819	0.16	0.16	1.24	73	2.69	0.98	73	1.4	81	0.100	101	101	17.5	-0.1	451	326	278	319	332	341	682	269	70	50	70	52	69	-0.049	1.81	0.1
19	3.026	2.977	0.16	0.16	1.25	73	2.67	0.98	74	1.4	81	0.101	100	99	17.5	0	448	325	276	317	330	339	677	266	70	50	70	52	69	-0.049	1.81	0.11
20	3.185	3.135	0.16	0.16	1.25	73	2.67	0.99	74	1.4	81	0.099	101	100	17.4	-0.1	445	324	274	315	327	337	675	264	70	50	70	52	69	-0.049	1.84	0.12
21	3.345	3.294	0.16	0.16	1.25	74	2.67	0.98	74	1.4	81	0.102	100	99	17.3	-0.1	442	323	272	314	325	335	672	262	70	51	70	52	69	-0.049	1.77	0.14
22	3.504	3.452	0.16	0.16	1.25	74	2.68	0.98	74	1.4	80	0.101	100	99	17.2	-0.1	440	322	270	312	323	333	670	260	70	51	70	52	69	-0.048	1.72	0.15
23	3.663	3.611	0.16	0.16	1.25	74	2.68	0.99	74	1.5	80	0.102	99	99	17.2	0	437	321	268	310	321	331	668	259	70	51	70	52	69	-0.048	1.72	0.15
24	3.822	3.771	0.16	0.16	1.25	74	2.68	0.98	74	1.4	81	0.102	99	100	17.1	-0.1	435	320	267	308	318	330	666	257	70	51	70	52	69	-0.047	1.71	0.16
25	3.982	3.929	0.16	0.16	1.24	74	2.68	0.99	74	1.5	80	0.102	100	99	17.0	-0.1	433	319	265	306	316	328	664	256	70	51	70	52	69	-0.048	1.7	0.17
26	4.141	4.089	0.16	0.16	1.24	74	2.68	0.99	75	1.5	80	0.100	100	101	17.0	0	431	317	263	304	314	326	662	255	70	51	70	53	69	-0.048	1.71	0.18
27	4.300	4.247	0.16	0.16	1.25	75	2.67	0.99	75	1.5	80	0.102	99	99	16.9	-0.1	429	316	262	303	312	324	660	255	70	51	70	53	69	-0.047	1.7	0.18
28	4.459	4.407	0.16	0.16	1.25	75	2.67	1.00	75	1.5	80	0.100	100	101	16.9	0	427	315	260	301	310	323	658	254	71	51	70	53	69	-0.047	1.7	0.18
29	4.619	4.567	0.16	0.16	1.25	75	2.68	1.00	75	1.5	80	0.099	101	101	16.8	-0.1	425	314	259	299	308	321	657	253	71	51	70	53	69	-0.047	1.7	0.19
30	4.779	4.726	0.16	0.16	1.24	75	2.69	1.00	75	1.5	80	0.100	101	100	16.7	-0.1	423	313	258	298	306	320	655	252	71	51	70	53	69	-0.047	1.74	0.19
31	4.938	4.886	0.16	0.16	1.25	75	2.68	1.00	75	1.5	79	0.100	100	101	16.6	-0.1	415	312	256	297	306	317	654	251	71	52	70	53	69	-0.047	1.75	0.19
32	5.097	5.047	0.16	0.16	1.25	75	2.68	1.00	76	1.5	79	0.102	99	100	16.6	0	411	311	254	296	304	315	654	250	71	52	70	53	69	-0.047	1.76	0.19
33	5.257	5.206	0.16	0.16	1.25	75	2.68	1.00	76	1.5	78	0.098	102	101	16.5	-0.1	407	311	252	295	303	314	654	249	71	52	70	53	69	-0.047	1.79	0.19
34	5.417	5.366	0.16	0.16	1.25	76	2.67	1.00	76	1.5	78	0.100	100	100	16.4	-0.1	405	310	251	294	302	312	655	249	70	52	70	53	69	-0.047	1.82	0.19
35	5.576	5.526	0.16	0.16	1.25	76	2.68	1.00	76	1.5	78	0.102	99	99	16.4	0	402	309	249	293	300	311	656	248	71	52	70	53	69	-0.047	1.82	0.19
36	5.735	5.686	0.16	0.16	1.25	76	2.69	1.00	76	1.5	78	0.100	100	100	16.3	-0.1	401	308	247	292	299	309	660	250	71	52	70	53	69	-0.047	1.9	0.17
37	5.895	5.846	0.16	0.16	1.25	76	2.69	1.00	76	1.5	78	0.097	102	102	16.2	-0.1	400	307	245	291	298	308	681	251	70	52	70	53	69	-0.048	2.41	0.13
38	6.056	6.006	0.16	0.16	1.25	76	2.7	1.00	76	1.5	78	0.103	99	99	16.1	-0.1	400	306	244	291	297	308	695	252	71	52	70	54	69	-0.047	2.18	0.13
39	6.216	6.166	0.16	0.16	1.25	76	2.7	1.00	76	1.5	78	0.103	99	99	16.1	0	401	305	242	291	296	307	700	255	71	52	70	54	69	-0.048	2.08	0.13
40	6.375	6.326	0.16	0.16	1.25	77	2.7	0.99	77	1.5	78	0.100	99	100	16.0	-0.1	403	304	241	290	295	307	706	257	71	52	70	54	69	-0.049	2.32	0.12

Wood Heater Test Data

u

Run: 5

Manufacturer: Kuma Stoves
Model: K-251
Tracking No.: 2464
Project No.: 0123WM014E
Test Date: 02-May-23
Beginning Clock Time: 11:58

Total Sampling Time: 382 min
Recording Interval: 1 min
Tunnel Diameter: 6
Background Sample Volume: 59.605 cubic feet

PM Control Modules: 335,336
Dilution Tunnel MW(dry): 29.00 lb/lb-mole
Dilution Tunnel MW(wet): 28.78 lb/lb-mole
Dilution Tunnel H2O: 2.00 percent
Dilution Tunnel Static: -0.280 "H2O
Tunnel Area: 0.19635 ft2
Pitot Tube Cp: 0.99

Avg. Tunnel Velocity: 18.62 ft/sec.
Initial Tunnel Flow: 212.2 scfm
Average Tunnel Flow: 208.3 scfm
Post-Test Leak Check (1st Hr): 0.000 cfm @ 15 in. Hg
Post-Test Leak Check (1): 0.001 cfm @ 14 in. Hg
Post-Test Leak Check (2): 0.000 cfm @ 10 in. Hg
Average Test Piece Fuel Moisture: 22.56 Dry Basis %

Technician Signature:_____

Meter Box Y Factor: 1.007 (1) 1.015 (2) 1.012 (Amb)

Barometric Pressure:

Begin	Middle	End	Average
29.71		29.80	29.76

Room Air Velocity, fpn
<50

OMNI Equipment Numbers: _____

Velocity Traverse Data

	Pt.1	Pt.2	Pt.3	Pt.4	Pt.5	Pt.6	Pt.7	Pt.8	Center	
Initial dP	0.064	0.098	0.090	0.066	0.052	0.092	0.092	0.082	0.103	"H2O
Temp:	77	77	77	77	77	77	77	77	76	°F

V_{strav} 18.82 ft/sec V_{scent} 21.51 ft/sec F_p 0.875

qwq

	Particulate Sampling Data														Fuel Weight (lb)		Temperature Data (°F)													Stack Gas Data		
Elapsed Time (min)	Gas Meter 1 (ft^3)	Gas Meter 2 (ft^3)	Sample Rate 1 (cfm)	Sample Rate 2 (cfm)	Orifice dH 1 ("H_2O)	Meter 1 Temp (°F)	Meter 1 Vacuum ("Hg)	Orifice dH 2 ("H_2O)	Meter 2 Temp (°F)	Meter 2 Vacuum ("Hg)	Dilution Tunnel (°F)	Dilution Tunnel Center dP	Pro. Rate 1	Pro. Rate 2	Scale Reading	Weight Change	Firebox Top	Firebox Bottom	Firebox Back	Firebox Left	Firebox Right	Avg. Stove Surface (Tot = ΔT)	Catalyst Exit	Stack	Filter 1	Dryer Exit 1	Filter 2	Dryer Exit 2	Ambient	Draft ("H_2O)	CO_2 (%)	CO (%)
41	6.534	6.487	0.16	0.16	1.25	77	2.69	1.00	77	1.5	78	0.099	100	101	15.9	-0.1	405	304	239	290	294	306	709	260	70	53	70	54	69	-0.049	2.3	0.1
42	6.695	6.646	0.16	0.16	1.25	77	2.68	1.00	77	1.5	78	0.101	100	99	15.8	-0.1	407	303	238	290	293	306	711	262	70	53	70	54	69	-0.049	2.2	0.08
43	6.855	6.806	0.16	0.16	1.24	77	2.68	1.00	77	1.5	78	0.100	100	100	15.8	0	410	302	237	289	293	306	713	264	71	53	70	54	69	-0.049	2.18	0.07
44	7.014	6.967	0.16	0.16	1.25	77	2.7	1.00	77	1.5	78	0.100	99	101	15.7	-0.1	411	301	236	289	292	306	715	266	71	53	70	54	69	-0.050	2.15	0.06
45	7.174	7.127	0.16	0.16	1.25	77	2.68	0.99	77	1.5	79	0.101	100	100	15.6	-0.1	413	300	235	288	291	305	716	267	71	53	70	54	69	-0.049	2.2	0.06
46	7.334	7.286	0.16	0.16	1.25	77	2.68	1.00	77	1.5	79	0.100	100	100	15.6	0	414	300	234	288	290	305	715	267	70	53	70	54	69	-0.049	2.18	0.06
47	7.495	7.447	0.16	0.16	1.24	77	2.69	1.00	77	1.5	79	0.099	101	101	15.5	-0.1	415	299	233	287	289	305	714	268	70	53	70	54	69	-0.050	2.18	0.06
48	7.655	7.608	0.16	0.16	1.25	77	2.69	1.00	77	1.5	79	0.101	100	100	15.4	-0.1	417	298	232	287	288	304	714	269	71	53	70	54	69	-0.049	2.14	0.06
49	7.814	7.767	0.16	0.16	1.24	78	2.7	1.00	78	1.5	79	0.100	99	100	15.4	0	418	298	231	287	287	304	713	269	71	53	70	54	69	-0.050	2.15	0.06
50	7.974	7.928	0.16	0.16	1.25	78	2.69	1.00	78	1.5	78	0.101	99	100	15.3	-0.1	420	297	230	286	287	304	713	269	71	53	70	54	69	-0.050	2.14	0.06
51	8.134	8.088	0.16	0.16	1.26	78	2.7	1.00	78	1.5	79	0.095	103	103	15.2	-0.1	421	296	229	286	286	304	713	269	70	53	70	55	69	-0.050	2.18	0.06
52	8.295	8.248	0.16	0.16	1.25	78	2.68	1.00	78	1.5	79	0.095	103	103	15.1	-0.1	423	296	229	286	286	304	714	270	70	53	70	55	69	-0.049	2.22	0.06
53	8.455	8.408	0.16	0.16	1.25	78	2.7	1.00	78	1.5	79	0.097	102	102	15.1	0	425	295	228	286	285	304	717	271	71	54	70	55	69	-0.050	2.25	0.07
54	8.615	8.569	0.16	0.16	1.25	78	2.7	1.00	78	1.5	79	0.100	100	101	15.0	-0.1	428	295	228	286	285	304	720	271	71	54	70	55	69	-0.050	2.3	0.07
55	8.775	8.729	0.16	0.16	1.25	78	2.69	1.00	78	1.5	79	0.102	99	99	14.9	-0.1	431	294	227	285	285	304	725	273	71	54	70	55	69	-0.050	2.34	0.07
56	8.936	8.889	0.16	0.16	1.24	78	2.69	1.00	78	1.5	79	0.097	102	102	14.9	0	435	294	227	285	284	305	730	275	71	54	70	55	69	-0.051	2.4	0.07
57	9.096	9.051	0.16	0.16	1.25	78	2.69	1.00	78	1.5	79	0.103	99	100	14.8	-0.1	439	293	226	285	284	305	735	277	71	54	70	55	69	-0.051	2.41	0.07
58	9.256	9.210	0.16	0.16	1.25	78	2.7	1.00	78	1.5	79	0.099	101	100	14.7	-0.1	443	293	226	285	284	306	740	277	71	54	70	55	69	-0.051	2.44	0.07
59	9.416	9.371	0.16	0.16	1.25	78	2.7	1.00	78	1.5	79	0.095	103	103	14.6	-0.1	447	292	226	285	284	307	745	280	71	54	70	55	69	-0.051	2.47	0.08
60	9.576	9.532	0.16	0.16	1.25	78	2.69	1.00	78	1.5	79	0.101	100	100	14.6	0	451	292	225	285	284	307	749	281	71	54	70	55	69	-0.051	2.46	0.07
61	9.733	9.692	0.16	0.16	1.17	79	2.94	1.00	79	1.5	79	0.101	97	99	14.5	-0.1	455	291	225	285	284	308	754	282	68	54	70	55	69	-0.051	2.49	0.07
62	9.890	9.852	0.16	0.16	1.24	79	3.05	1.00	79	1.5	79	0.103	97	99	14.4	-0.1	458	291	225	285	284	309	759	283	69	54	70	55	69	-0.051	2.51	0.07
63	10.049	10.013	0.16	0.16	1.26	79	3.08	1.00	79	1.5	80	0.101	99	100	14.3	-0.1	463	290	225	285	284	309	764	284	69	54	70	55	69	-0.052	2.55	0.08
64	10.210	10.174	0.16	0.16	1.26	79	3.08	1.00	79	1.5	80	0.098	102	102	14.3	0	467	290	225	285	284	310	769	286	69	54	70	55	69	-0.052	2.6	0.08
65	10.371	10.333	0.16	0.16	1.26	79	3.09	0.99	79	1.5	80	0.102	100	98	14.2	-0.1	472	290	224	286	284	311	774	287	69	54	70	55	69	-0.052	2.66	0.08
66	10.532	10.494	0.16	0.16	1.25	79	3.08	1.00	79	1.5	80	0.100	101	101	14.1	-0.1	477	289	225	286	285	312	779	288	69	55	70	56	69	-0.052	2.66	0.08
67	10.692	10.655	0.16	0.16	1.26	79	3.09	1.00	79	1.5	80	0.100	100	101	14.0	-0.1	482	289	224	286	285	313	784	289	69	55	70	56	69	-0.052	2.7	0.08
68	10.853	10.815	0.16	0.16	1.25	79	3.07	0.99	79	1.5	80	0.101	100	100	14.0	0	487	289	225	287	285	315	789	291	69	55	70	56	69	-0.053	2.75	0.08
69	11.013	10.975	0.16	0.16	1.26	79	3.08	1.00	79	1.5	80	0.101	99	100	13.9	-0.1	493	288	225	287	286	316	796	294	69	55	70	56	69	-0.053	2.77	0.08
70	11.175	11.137	0.16	0.16	1.26	79	3.09	1.00	79	1.5	80	0.099	102	102	13.8	-0.1	499	288	225	287	286	317	803	295	69	55	70	56	69	-0.053	2.82	0.08
71	11.336	11.297	0.16	0.16	1.25	79	3.08	1.00	79	1.5	80	0.101	100	100	13.7	-0.1	505	288	225	288	287	319	811	297	70	55	70	56	69	-0.053	2.84	0.09
72	11.496	11.457	0.16	0.16	1.26	79	3.08	1.00	79	1.5	80	0.100	100	100	13.6	-0.1	512	287	225	288	288	320	819	300	70	55	70	56	69	-0.053	2.88	0.09
73	11.656	11.618	0.16	0.16	1.25	79	3.08	1.00	79	1.5	81	0.101	100	100	13.5	-0.1	519	287	225	289	288	322	828	302	70	55	70	56	70	-0.054	2.99	0.09
74	11.817	11.779	0.16	0.16	1.26	79	3.09	1.00	79	1.5	81	0.099	101	101	13.4	-0.1	530	287	226	289	289	324	842	306	70	55	70	56	70	-0.055	3.2	0.11
75	11.979	11.939	0.16	0.16	1.25	79	3.08	1.00	79	1.5	81	0.101	101	100	13.4	0	542	287	226	290	290	327	859	310	70	55	70	56	69	-0.055	3.22	0.11
76	12.140	12.100	0.16	0.16	1.26	79	3.1	1.00	79	1.5	81	0.099	101	101	13.3	-0.1	553	287	227	290	290	329	873	312	70	55	70	56	69	-0.055	3.21	0.11
77	12.300	12.260	0.16	0.16	1.25	79	3.08	0.99	79	1.5	81	0.096	102	102	13.2	-0.1	562	287	228	291	291	332	884	315	70	55	70	56	69	-0.055	3.19	0.11
78	12.461	12.420	0.16	0.16	1.25	80	3.09	1.00	79	1.5	81	0.102	99	99	13.2	0	571	287	228	291	292	334	893	317	70	55	70	56	70	-0.055	3.17	0.11
79	12.621	12.581	0.16	0.16	1.26	80	3.1	1.00	80	1.5	82	0.102	99	100	13.1	-0.1	579	286	229	292	293	336	901	320	70	55	70	56	70	-0.056	3.18	0.11
80	12.782	12.742	0.16	0.16	1.26	80	3.1	1.00	80	1.5	82	0.102	100	100	13.0	-0.1	586	286	230	293	294	338	909	321	70	55	70	56	70	-0.056	3.22	0.11
81	12.944	12.902	0.16	0.16	1.25	80	3.09	1.00	80	1.5	82	0.099	102	101	12.9	-0.1	593	286	231	293	295	340	916	323	71	55	70	56	70	-0.056	3.23	0.11
82	13.104	13.063	0.16	0.16	1.25	80	3.1	1.00	80	1.5	82	0.101	99	100	12.8	-0.1	599	286	231	294	296	341	923	323	71	55	70	56	70	-0.057	3.25	0.11
83	13.265	13.224	0.16	0.16	1.26	80	3.09	1.00	80	1.5	82	0.101	100	100	12.8	0	606	286	232	295	297	343	929	325	71	55	70	56	70	-0.055	3.27	0.11
84	13.425	13.384	0.16	0.16	1.26	80	3.11	1.00	80	1.5	82	0.101	99	100	12.6	-0.2	612	286	233	296	298	345	935	326	71	56	70	57	70	-0.056	3.29	0.11

Wood Heater Test Data

u

Run: 5

Manufacturer: Kuma Stoves
Model: K-251
Tracking No.: 2464
Project No.: 0123WM014E
Test Date: 02-May-23
Beginning Clock Time: 11:58

Total Sampling Time: 382 min
Recording Interval: 1 min
Tunnel Diameter: 6
Background Sample Volume: 59.605 cubic feet

PM Control Modules: 335,336
Dilution Tunnel MW(dry): 29.00 lb/lb-mole
Dilution Tunnel MW(wet): 28.78 lb/lb-mole
Dilution Tunnel H2O: 2.00 percent
Dilution Tunnel Static: -0.280 "H2O
Tunnel Area: 0.19635 ft2
Pitot Tube Cp: 0.99

Avg. Tunnel Velocity: 18.62 ft/sec.
Initial Tunnel Flow: 212.2 scfm
Average Tunnel Flow: 208.3 scfm
Post-Test Leak Check (1st Hr): 0.000 cfm @ 15 in. Hg
Post-Test Leak Check (1): 0.001 cfm @ 14 in. Hg
Post-Test Leak Check (2): 0.000 cfm @ 10 in. Hg
Average Test Piece Fuel Moisture: 22.56 Dry Basis %

Technician Signature:_____

Meter Box Y Factor: 1.007 (1) 1.015 (2) 1.012 (Amb)

Barometric Pressure:

Begin	Middle	End	Average
29.71		29.80	29.76

Room Air Velocity, fpn
<50

OMNI Equipment Numbers: _____

Velocity Traverse Data

	Pt.1	Pt.2	Pt.3	Pt.4	Pt.5	Pt.6	Pt.7	Pt.8	Center	
Initial dP	0.064	0.098	0.090	0.066	0.052	0.092	0.092	0.082	0.103	"H2O
Temp:	77	77	77	77	77	77	77	77	76	°F

V_{strav} 18.82 ft/sec V_{scent} 21.51 ft/sec F_p 0.875

qwq

	Particulate Sampling Data														Fuel Weight (lb)		Temperature Data (°F)													Stack Gas Data		
Elapsed Time (min)	Gas Meter 1 (ft^3)	Gas Meter 2 (ft^3)	Sample Rate 1 (cfm)	Sample Rate 2 (cfm)	Orifice dH 1 ("H_2O)	Meter 1 Temp (°F)	Meter 1 Vacuum ("Hg)	Orifice dH 2 ("H_2O)	Meter 2 Temp (°F)	Meter 2 Vacuum ("Hg)	Dilution Tunnel (°F)	Dilution Tunnel Center dP	Pro. Rate 1	Pro. Rate 2	Scale Reading	Weight Change	Firebox Top	Firebox Bottom	Firebox Back	Firebox Left	Firebox Right	Avg. Stove Surface (Tot = ΔT)	Catalyst Exit	Stack	Filter 1	Dryer Exit 1	Filter 2	Dryer Exit 2	Ambient	Draft ("H_2O)	CO_2 (%)	CO (%)
85	13.586	13.544	0.16	0.16	1.26	80	3.1	1.00	80	1.5	82	0.101	100	100	12.5	-0.1	617	286	234	297	300	347	940	327	71	56	70	57	70	-0.056	3.28	0.11
86	13.748	13.706	0.16	0.16	1.26	80	3.09	1.00	80	1.5	82	0.094	104	105	12.5	0	622	286	235	298	301	348	944	329	71	56	70	57	70	-0.056	3.22	0.11
87	13.909	13.866	0.16	0.16	1.25	80	3.09	0.99	80	1.5	83	0.102	100	99	12.4	-0.1	626	286	236	299	302	350	946	329	71	56	70	57	70	-0.057	3.22	0.11
88	14.069	14.026	0.16	0.16	1.25	80	3.1	1.00	80	1.5	82	0.100	100	100	12.3	-0.1	629	286	237	300	303	351	947	329	71	56	70	57	70	-0.056	3.14	0.11
89	14.230	14.187	0.16	0.16	1.25	80	3.1	1.00	80	1.5	83	0.099	101	101	12.2	-0.1	631	286	238	301	304	352	947	328	71	56	70	57	70	-0.056	3.14	0.11
90	14.390	14.348	0.16	0.16	1.26	80	3.1	1.00	80	1.5	83	0.100	100	101	12.1	-0.1	633	286	239	302	305	353	947	329	71	56	70	57	70	-0.056	3.16	0.11
91	14.551	14.508	0.16	0.16	1.25	80	3.09	1.00	80	1.5	83	0.102	100	99	12.0	-0.1	635	286	240	304	306	354	947	330	71	56	70	57	70	-0.056	3.16	0.11
92	14.713	14.669	0.16	0.16	1.25	80	3.1	1.00	80	1.5	83	0.098	102	102	11.9	-0.1	637	286	241	305	307	355	948	330	71	56	70	57	70	-0.056	3.19	0.11
93	14.874	14.830	0.16	0.16	1.26	80	3.11	0.99	80	1.5	83	0.099	101	101	11.8	-0.1	639	286	242	306	308	356	949	331	71	56	70	57	70	-0.056	3.2	0.11
94	15.034	14.990	0.16	0.16	1.25	80	3.1	1.00	80	1.5	83	0.100	100	100	11.7	-0.1	641	286	243	307	309	357	950	332	71	56	71	57	70	-0.056	3.22	0.11
95	15.195	15.151	0.16	0.16	1.26	80	3.09	1.00	80	1.5	83	0.101	100	100	11.6	-0.1	643	286	244	308	310	358	952	331	71	56	71	57	70	-0.056	3.19	0.1
96	15.356	15.312	0.16	0.16	1.26	80	3.11	0.99	80	1.5	83	0.099	101	101	11.6	0	645	286	246	309	311	359	953	331	71	56	71	57	70	-0.057	3.24	0.11
97	15.517	15.472	0.16	0.16	1.26	80	3.1	0.99	80	1.5	83	0.099	101	101	11.5	-0.1	648	286	247	310	312	361	955	333	71	56	71	57	70	-0.056	3.26	0.11
98	15.678	15.632	0.16	0.16	1.26	80	3.1	1.00	80	1.5	83	0.099	101	101	11.4	-0.1	650	286	248	311	313	362	957	333	72	56	71	57	70	-0.056	3.26	0.11
99	15.839	15.793	0.16	0.16	1.25	80	3.11	1.00	80	1.5	83	0.101	100	100	11.3	-0.1	653	286	249	312	314	363	959	333	72	56	71	57	70	-0.056	3.27	0.1
100	16.000	15.954	0.16	0.16	1.25	80	3.1	1.00	80	1.5	83	0.103	99	99	11.2	-0.1	655	286	250	313	315	364	961	333	72	56	71	57	70	-0.057	3.26	0.1
101	16.160	16.114	0.16	0.16	1.26	80	3.12	1.00	80	1.5	83	0.100	100	100	11.1	-0.1	657	286	252	314	316	365	964	334	72	56	71	57	70	-0.057	3.32	0.11
102	16.321	16.275	0.16	0.16	1.25	80	3.1	1.00	80	1.5	84	0.101	100	100	11.0	-0.1	660	286	253	316	317	366	967	334	72	56	71	57	70	-0.057	3.35	0.11
103	16.483	16.436	0.16	0.16	1.25	80	3.1	1.00	80	1.5	83	0.093	105	105	11.0	0	663	286	254	317	318	368	971	336	72	56	71	57	70	-0.057	3.4	0.11
104	16.644	16.596	0.16	0.16	1.25	81	3.11	1.00	80	1.5	84	0.095	103	103	10.9	-0.1	666	286	255	318	319	369	976	336	72	56	71	57	70	-0.057	3.46	0.11
105	16.804	16.757	0.16	0.16	1.25	81	3.11	1.00	80	1.5	84	0.095	103	104	10.8	-0.1	670	287	256	319	320	370	981	337	72	56	71	57	70	-0.056	3.47	0.11
106	16.965	16.918	0.16	0.16	1.26	81	3.12	0.99	81	1.5	84	0.102	100	100	10.7	-0.1	675	287	257	320	321	372	988	337	72	56	71	57	70	-0.057	3.53	0.12
107	17.126	17.078	0.16	0.16	1.25	81	3.11	0.99	81	1.5	84	0.101	100	100	10.6	-0.1	680	287	259	321	322	374	995	339	72	57	71	58	71	-0.057	3.57	0.12
108	17.287	17.238	0.16	0.16	1.25	81	3.12	0.99	81	1.5	84	0.100	101	100	10.5	-0.1	686	287	260	322	323	376	1003	341	72	57	71	58	71	-0.057	3.65	0.12
109	17.449	17.399	0.16	0.16	1.26	81	3.1	1.00	81	1.5	84	0.100	101	101	10.4	-0.1	693	287	261	323	324	378	1012	342	72	57	71	58	70	-0.057	3.69	0.13
110	17.609	17.560	0.16	0.16	1.25	81	3.1	0.99	81	1.5	84	0.101	99	100	10.3	-0.1	699	288	262	324	325	380	1021	343	72	57	71	58	71	-0.058	3.74	0.13
111	17.769	17.720	0.16	0.16	1.25	81	3.11	0.99	81	1.5	84	0.100	100	100	10.2	-0.1	706	288	264	326	326	382	1030	343	72	57	71	58	71	-0.058	3.76	0.14
112	17.930	17.880	0.16	0.16	1.25	81	3.11	0.99	81	1.5	84	0.102	100	99	10.1	-0.1	711	288	265	327	328	384	1037	344	72	57	71	58	71	-0.057	3.7	0.14
113	18.091	18.041	0.16	0.16	1.26	81	3.12	0.99	81	1.5	84	0.100	101	101	10.0	-0.1	716	288	266	328	329	385	1042	345	72	57	71	58	71	-0.058	3.7	0.15
114	18.252	18.201	0.16	0.16	1.25	81	3.11	0.99	81	1.5	84	0.100	101	100	10.0	0	720	288	268	330	330	387	1047	344	72	57	71	58	71	-0.058	3.69	0.14
115	18.413	18.362	0.16	0.16	1.25	81	3.11	0.99	81	1.5	84	0.103	99	99	9.9	-0.1	724	289	269	331	331	389	1050	345	72	57	71	58	71	-0.057	3.69	0.14
116	18.573	18.523	0.16	0.16	1.25	81	3.12	0.99	81	1.5	85	0.100	100	101	9.8	-0.1	727	289	270	332	332	390	1053	346	72	57	71	58	71	-0.057	3.66	0.13
117	18.734	18.683	0.16	0.16	1.25	81	3.11	0.99	81	1.5	85	0.098	102	101	9.7	-0.1	730	289	272	334	333	392	1056	346	72	57	71	58	71	-0.058	3.64	0.13
118	18.895	18.843	0.16	0.16	1.26	81	3.1	0.99	81	1.5	85	0.101	100	100	9.6	-0.1	731	289	273	335	335	393	1056	345	72	57	71	58	71	-0.057	3.62	0.12
119	19.056	19.004	0.16	0.16	1.26	81	3.11	0.99	81	1.5	85	0.098	102	102	9.5	-0.1	733	289	274	336	336	394	1055	345	72	57	71	58	71	-0.058	3.59	0.12
120	19.217	19.164	0.16	0.16	1.25	81	3.11	0.99	81	1.5	85	0.097	102	102	9.4	-0.1	734	289	276	338	337	395	1054	346	72	57	71	58	71	-0.058	3.59	0.12
121	19.378	19.324	0.16	0.16	1.25	81	3.12	0.99	81	1.5	85	0.100	101	100	9.3	-0.1	735	290	277	339	338	396	1054	346	72	57	71	58	71	-0.058	3.62	0.12
122	19.538	19.485	0.16	0.16	1.25	81	3.12	0.99	81	1.5	85	0.101	100	100	9.2	-0.1	737	290	278	340	340	397	1054	346	72	57	71	58	71	-0.058	3.65	0.12
123	19.699	19.646	0.16	0.16	1.26	81	3.11	0.99	81	1.5	85	0.100	101	101	9.1	-0.1	738	290	280	342	341	398	1055	345	73	57	71	58	71	-0.058	3.65	0.12
124	19.860	19.806	0.16	0.16	1.25	81	3.12	0.99	81	1.5	85	0.099	101	101	9.0	-0.1	740	290	282	343	342	399	1057	345	73	57	71	58	71	-0.058	3.64	0.12
125	20.022	19.966	0.16	0.16	1.25	81	3.12	0.99	81	1.5	85	0.099	102	101	8.9	-0.1	742	291	283	344	344	401	1059	346	73	57	71	58	71	-0.058	3.64	0.12
126	20.182	20.127	0.16	0.16	1.24	81	3.11	0.99	81	1.5	85	0.095	103	103	8.8	-0.1	744	291	284	346	345	402	1062	348	73	57	71	58	71	-0.058	3.71	0.13
127	20.342	20.287	0.16	0.16	1.24	81	3.11	0.99	81	1.5	85	0.101	100	100	8.7	-0.1	747	291	286	347	346	403	1066	347	73	57	71	58	71	-0.058	3.77	0.13
128	20.502	20.447	0.16	0.16	1.25	81	3.09	0.99	81	1.5	85	0.095	103	103	8.6	-0.1	751	291	287	348	348	405	1070	348	73	57	71	58	71	-0.058	3.77	0.14

Wood Heater Test Data

u

Run: 5

Manufacturer: Kuma Stoves
Model: K-251
Tracking No.: 2464
Project No.: 0123WM014E
Test Date: 02-May-23
Beginning Clock Time: 11:58

Total Sampling Time: 382 min
Recording Interval: 1 min
Tunnel Diameter: 6
Background Sample Volume: 59.605 cubic feet

PM Control Modules: 335,336
Dilution Tunnel MW(dry): 29.00 lb/lb-mole
Dilution Tunnel MW(wet): 28.78 lb/lb-mole
Dilution Tunnel H2O: 2.00 percent
Dilution Tunnel Static: -0.280 "H2O
Tunnel Area: 0.19635 ft2
Pitot Tube Cp: 0.99

Avg. Tunnel Velocity: 18.62 ft/sec.
Initial Tunnel Flow: 212.2 scfm
Average Tunnel Flow: 208.3 scfm
Post-Test Leak Check (1st Hr): 0.000 cfm @ 15 in. Hg
Post-Test Leak Check (1): 0.001 cfm @ 14 in. Hg
Post-Test Leak Check (2): 0.000 cfm @ 10 in. Hg
Average Test Piece Fuel Moisture: 22.56 Dry Basis %

Technician Signature:_____

Meter Box Y Factor: 1.007 (1) 1.015 (2) 1.012 (Amb)

Export to PDF

Barometric Pressure:	Begin	Middle	End	Average
	29.71		29.80	29.76

Room Air Velocity, fpn
<50

OMNI Equipment Numbers: _____

Velocity Traverse Data

	Pt.1	Pt.2	Pt.3	Pt.4	Pt.5	Pt.6	Pt.7	Pt.8	Center	
Initial dP	0.064	0.098	0.090	0.066	0.052	0.092	0.092	0.082	0.103	"H2O
Temp:	77	77	77	77	77	77	77	77	76	°F

V_{strav} 18.82 ft/sec V_{scent} 21.51 ft/sec F_p 0.875

qwq

	Particulate Sampling Data														Fuel Weight (lb)		Temperature Data (°F)													Stack Gas Data		
Elapsed Time (min)	Gas Meter 1 (ft^3)	Gas Meter 2 (ft^3)	Sample Rate 1 (cfm)	Sample Rate 2 (cfm)	Orifice dH 1 ("H_2O)	Meter 1 Temp (°F)	Meter 1 Vacuum ("Hg)	Orifice dH 2 ("H_2O)	Meter 2 Temp (°F)	Meter 2 Vacuum ("Hg)	Dilution Tunnel (°F)	Dilution Tunnel Center dP	Pro. Rate 1	Pro. Rate 2	Scale Reading	Weight Change	Firebox Top	Firebox Bottom	Firebox Back	Firebox Left	Firebox Right	Avg. Stove Surface (Tot = ΔT)	Catalyst Exit	Stack	Filter 1	Dryer Exit 1	Filter 2	Dryer Exit 2	Ambient	Draft ("H_2O)	CO_2 (%)	CO (%)
129	20.662	20.608	0.16	0.16	1.25	81	3.1	0.99	81	1.5	85	0.097	102	102	8.5	-0.1	753	292	289	350	349	407	1075	348	73	57	71	58	71	-0.058	3.77	0.17
130	20.824	20.768	0.16	0.16	1.25	81	3.11	0.99	81	1.5	85	0.100	101	100	8.4	-0.1	757	292	290	351	350	408	1079	349	73	57	71	58	71	-0.058	3.79	0.18
131	20.984	20.929	0.16	0.16	1.24	81	3.11	0.99	81	1.5	86	0.100	100	101	8.3	-0.1	760	292	292	352	351	409	1082	349	73	57	71	58	71	-0.058	3.79	0.21
132	21.144	21.090	0.16	0.16	1.24	81	3.11	0.99	81	1.5	86	0.101	100	100	8.2	-0.1	763	292	293	354	353	411	1086	351	73	57	71	58	71	-0.058	3.86	0.25
133	21.304	21.249	0.16	0.16	1.24	81	3.11	0.99	81	1.5	86	0.101	100	99	8.1	-0.1	765	293	295	355	354	412	1089	350	73	57	71	58	71	-0.058	3.83	0.23
134	21.464	21.409	0.16	0.16	1.25	81	3.11	0.99	81	1.5	86	0.100	100	100	8.0	-0.1	767	293	296	357	355	414	1092	350	73	57	71	58	72	-0.058	3.77	0.2
135	21.625	21.570	0.16	0.16	1.24	81	3.11	0.99	81	1.5	86	0.101	100	100	7.9	-0.1	769	293	297	358	356	415	1092	349	73	57	71	58	72	-0.058	3.77	0.17
136	21.786	21.731	0.16	0.16	1.24	81	3.11	0.99	81	1.5	86	0.094	104	104	7.8	-0.1	770	294	299	359	358	416	1092	348	73	57	71	58	72	-0.058	3.73	0.18
137	21.946	21.890	0.16	0.16	1.24	81	3.1	0.99	81	1.5	86	0.097	102	101	7.7	-0.1	771	294	300	361	359	417	1093	348	73	57	72	58	72	-0.058	3.71	0.18
138	22.106	22.051	0.16	0.16	1.25	81	3.1	0.99	81	1.5	86	0.101	100	100	7.6	-0.1	771	294	302	362	360	418	1093	347	73	57	72	58	72	-0.058	3.71	0.18
139	22.266	22.212	0.16	0.16	1.25	81	3.12	0.98	81	1.5	86	0.098	101	102	7.5	-0.1	771	295	303	364	362	419	1093	347	73	57	72	58	72	-0.058	3.69	0.18
140	22.427	22.371	0.16	0.16	1.24	81	3.12	0.99	82	1.5	86	0.097	102	101	7.4	-0.1	772	295	304	366	363	420	1093	348	73	57	72	58	72	-0.058	3.73	0.19
141	22.588	22.532	0.16	0.16	1.24	82	3.12	0.99	82	1.5	86	0.097	102	102	7.3	-0.1	772	295	306	367	364	421	1093	347	73	57	72	58	72	-0.058	3.69	0.19
142	22.748	22.693	0.16	0.16	1.24	82	3.1	0.99	82	1.5	85	0.100	100	101	7.2	-0.1	772	296	307	369	365	422	1094	348	73	57	72	58	72	-0.058	3.72	0.19
143	22.908	22.852	0.16	0.16	1.25	82	3.11	0.99	82	1.5	86	0.102	99	98	7.2	0	773	296	309	370	367	423	1095	347	73	57	72	58	72	-0.058	3.65	0.17
144	23.068	23.012	0.16	0.16	1.25	82	3.11	0.99	82	1.5	85	0.100	100	100	7.0	-0.2	772	296	310	372	368	424	1096	347	73	57	72	58	72	-0.058	3.67	0.18
145	23.229	23.173	0.16	0.16	1.24	82	3.11	0.99	82	1.5	86	0.102	100	100	6.9	-0.1	773	297	312	374	369	425	1097	346	73	58	72	59	72	-0.057	3.59	0.16
146	23.390	23.333	0.16	0.16	1.24	82	3.11	0.99	82	1.5	86	0.100	101	100	6.8	-0.1	771	297	314	375	370	425	1098	345	73	58	72	59	72	-0.057	3.5	0.13
147	23.549	23.493	0.16	0.16	1.24	82	3.12	0.99	82	1.5	85	0.098	100	101	6.7	-0.1	769	298	315	377	371	426	1099	343	73	58	72	59	72	-0.057	3.4	0.12
148	23.709	23.654	0.16	0.16	1.24	82	3.1	0.99	82	1.5	86	0.099	100	101	6.7	0	766	298	317	379	372	426	1098	341	73	58	72	59	72	-0.057	3.36	0.12
149	23.870	23.814	0.16	0.16	1.24	82	3.1	0.99	82	1.5	85	0.098	101	101	6.5	-0.2	762	298	318	380	373	426	1096	340	73	58	72	59	72	-0.057	3.28	0.11
150	24.031	23.974	0.16	0.16	1.25	82	3.11	0.99	82	1.5	85	0.102	99	99	6.5	0	758	299	320	382	374	427	1094	339	73	58	72	59	72	-0.056	3.21	0.11
151	24.191	24.135	0.16	0.16	1.24	82	3.12	0.98	82	1.5	85	0.100	100	101	6.4	-0.1	754	299	321	383	375	426	1090	338	73	58	72	59	72	-0.056	3.2	0.11
152	24.351	24.295	0.16	0.16	1.24	82	3.11	0.99	82	1.5	85	0.095	102	103	6.3	-0.1	748	300	322	384	376	426	1086	337	73	58	72	59	72	-0.056	3.1	0.1
153	24.511	24.455	0.16	0.16	1.24	82	3.11	0.99	82	1.5	85	0.093	104	104	6.2	-0.1	742	300	324	385	377	426	1081	334	73	58	72	59	72	-0.056	3.03	0.1
154	24.672	24.616	0.16	0.16	1.24	82	3.12	0.99	82	1.5	85	0.102	99	100	6.2	0	736	300	325	387	378	425	1075	332	73	58	72	59	72	-0.055	3.01	0.1
155	24.833	24.776	0.16	0.16	1.24	82	3.1	0.98	82	1.5	85	0.102	99	99	6.1	-0.1	729	301	326	388	378	424	1069	329	73	58	72	59	72	-0.055	2.96	0.1
156	24.993	24.936	0.16	0.16	1.24	82	3.12	0.99	82	1.5	85	0.099	100	100	6.0	-0.1	722	301	328	389	379	424	1063	327	73	58	72	59	72	-0.055	2.95	0.1
157	25.153	25.097	0.16	0.16	1.24	82	3.11	0.99	82	1.5	84	0.101	99	100	5.9	-0.1	714	302	329	390	380	423	1057	326	73	58	72	59	72	-0.055	2.9	0.09
158	25.313	25.257	0.16	0.16	1.24	82	3.11	0.98	82	1.5	84	0.101	99	99	5.8	-0.1	708	302	330	391	380	422	1051	325	73	58	72	59	72	-0.055	2.91	0.09
159	25.474	25.417	0.16	0.16	1.24	82	3.12	0.99	82	1.5	84	0.102	99	99	5.8	0	702	302	331	392	381	422	1046	323	73	58	72	59	72	-0.054	2.89	0.09
160	25.635	25.577	0.16	0.16	1.24	82	3.12	0.99	82	1.5	84	0.101	100	99	5.7	-0.1	696	303	333	392	382	421	1041	321	73	58	72	59	72	-0.054	2.9	0.09
161	25.795	25.738	0.16	0.16	1.24	82	3.11	0.98	82	1.5	84	0.102	99	100	5.6	-0.1	690	303	334	393	382	420	1037	319	73	58	72	59	72	-0.054	2.9	0.09
162	25.955	25.898	0.16	0.16	1.24	82	3.11	0.99	82	1.5	84	0.102	99	99	5.5	-0.1	686	304	335	394	383	420	1033	318	73	58	72	59	72	-0.054	2.91	0.09
163	26.115	26.058	0.16	0.16	1.24	82	3.1	0.99	82	1.5	84	0.098	101	101	5.5	0	682	304	336	395	384	420	1031	317	73	58	72	59	72	-0.054	2.92	0.09
164	26.276	26.219	0.16	0.16	1.24	82	3.11	0.98	82	1.5	84	0.102	99	100	5.4	-0.1	678	304	337	395	384	420	1029	315	73	58	72	59	72	-0.054	2.92	0.09
165	26.437	26.378	0.16	0.16	1.24	82	3.11	0.98	82	1.5	84	0.100	100	99	5.4	0	675	305	338	396	385	420	1029	315	73	58	72	59	72	-0.054	2.96	0.09
166	26.597	26.539	0.16	0.16	1.23	82	3.11	0.99	82	1.5	84	0.101	99	100	5.3	-0.1	673	305	339	397	385	420	1028	314	73	58	72	59	72	-0.053	2.92	0.09
167	26.757	26.700	0.16	0.16	1.25	82	3.11	0.99	82	1.5	84	0.101	99	100	5.3	0	670	306	340	398	386	420	1026	312	73	58	72	59	72	-0.053	2.88	0.09
168	26.917	26.859	0.16	0.16	1.24	82	3.11	0.99	82	1.5	84	0.099	100	100	5.3	0	668	306	341	398	386	420	1025	312	73	58	72	59	72	-0.053	2.9	0.09
169	27.078	27.020	0.16	0.16	1.24	82	3.12	0.99	82	1.5	84	0.100	100	101	5.2	-0.1	666	307	342	399	387	420	1024	311	73	58	72	59	72	-0.052	2.91	0.09
170	27.239	27.181	0.16	0.16	1.24	82	3.11	0.98	82	1.5	84	0.100	100	101	5.2	0	663	307	343	399	387	420	1023	309	73	58	72	59	72	-0.052	2.89	0.09
171	27.400	27.340	0.16	0.16	1.24	82	3.12	0.99	82	1.5	84	0.099	101	100	5.1	-0.1	661	307	344	400	388	420	1020	309	73	58	72	59	72	-0.052	2.88	0.09
172	27.559	27.500	0.16	0.16	1.24	82	3.11	0.98	82	1.5	84	0.101	99	99	5.1	0	657	308	345	401	388	420	1018	308	73	58	72	59	72	-0.052	2.84	0.09

Wood Heater Test Data

u

Run: 5

Manufacturer: Kuma Stoves
Model: K-251
Tracking No.: 2464
Project No.: 0123WM014E
Test Date: 02-May-23
Beginning Clock Time: 11:58

Total Sampling Time: 382 min
Recording Interval: 1 min
Tunnel Diameter: 6
Background Sample Volume: 59.605 cubic feet

PM Control Modules: 335,336
Dilution Tunnel MW(dry): 29.00 lb/lb-mole
Dilution Tunnel MW(wet): 28.78 lb/lb-mole
Dilution Tunnel H2O: 2.00 percent
Dilution Tunnel Static: -0.280 "H2O
Tunnel Area: 0.19635 ft2
Pitot Tube Cp: 0.99

Avg. Tunnel Velocity: 18.62 ft/sec.
Initial Tunnel Flow: 212.2 scfm
Average Tunnel Flow: 208.3 scfm
Post-Test Leak Check (1st Hr): 0.000 cfm @ 15 in. Hg
Post-Test Leak Check (1): 0.001 cfm @ 14 in. Hg
Post-Test Leak Check (2): 0.000 cfm @ 10 in. Hg
Average Test Piece Fuel Moisture: 22.56 Dry Basis %

Technician Signature:_____

Export to PDF

Meter Box Y Factor: 1.007 (1) 1.015 (2) 1.012 (Amb)

Barometric Pressure:	Begin	Middle	End	Average
	29.71		29.80	29.76

Room Air Velocity, fpn
<50

OMNI Equipment Numbers: _____

Velocity Traverse Data

	Pt.1	Pt.2	Pt.3	Pt.4	Pt.5	Pt.6	Pt.7	Pt.8	Center	
Initial dP	0.064	0.098	0.090	0.066	0.052	0.092	0.092	0.082	0.103	"H2O
Temp:	77	77	77	77	77	77	77	77	76	°F

V_{strav} 18.82 ft/sec V_{scent} 21.51 ft/sec F_p 0.875

qwq

	Particulate Sampling Data														Fuel Weight (lb)		Temperature Data (°F)													Stack Gas Data		
Elapsed Time (min)	Gas Meter 1 (ft^3)	Gas Meter 2 (ft^3)	Sample Rate 1 (cfm)	Sample Rate 2 (cfm)	Orifice dH 1 ("H_2O)	Meter 1 Temp (°F)	Meter 1 Vacuum ("Hg)	Orifice dH 2 ("H_2O)	Meter 2 Temp (°F)	Meter 2 Vacuum ("Hg)	Dilution Tunnel (°F)	Dilution Tunnel Center dP	Pro. Rate 1	Pro. Rate 2	Scale Reading	Weight Change	Firebox Top	Firebox Bottom	Firebox Back	Firebox Left	Firebox Right	Avg. Stove Surface (Tot = ΔT)	Catalyst Exit	Stack	Filter 1	Dryer Exit 1	Filter 2	Dryer Exit 2	Ambient	Draft ("H_2O)	CO_2 (%)	CO (%)
173	27.720	27.662	0.16	0.16	1.25	82	3.12	0.98	82	1.5	84	0.095	103	104	5.0	-0.1	653	308	346	401	389	419	1015	306	73	58	72	59	72	-0.052	2.81	0.09
174	27.880	27.822	0.16	0.16	1.25	82	3.11	0.98	82	1.5	84	0.101	99	99	4.9	-0.1	649	309	347	402	389	419	1011	305	73	58	72	59	72	-0.052	2.78	0.09
175	28.042	27.981	0.16	0.16	1.25	82	3.12	0.99	82	1.5	84	0.100	101	99	4.9	0	645	309	347	402	389	418	1007	303	73	58	72	59	72	-0.051	2.74	0.09
176	28.202	28.142	0.16	0.16	1.24	82	3.11	0.99	82	1.5	84	0.101	99	100	4.8	-0.1	641	310	348	403	390	418	1003	302	73	58	72	59	72	-0.051	2.69	0.08
177	28.362	28.303	0.16	0.16	1.24	82	3.11	0.98	82	1.5	84	0.099	100	101	4.8	0	636	310	349	403	390	418	998	301	73	58	72	59	73	-0.051	2.66	0.08
178	28.523	28.463	0.16	0.16	1.25	82	3.12	0.98	82	1.5	83	0.100	100	100	4.7	-0.1	631	310	350	404	391	417	993	298	73	58	72	59	73	-0.051	2.68	0.08
179	28.683	28.623	0.16	0.16	1.24	82	3.11	0.99	82	1.5	83	0.100	100	100	4.7	0	626	311	350	404	391	416	989	297	73	58	72	59	72	-0.050	2.63	0.08
180	28.844	28.784	0.16	0.16	1.24	82	3.12	0.98	82	1.5	83	0.100	100	100	4.6	-0.1	622	311	351	404	391	416	983	295	73	58	72	59	72	-0.050	2.62	0.08
181	29.005	28.944	0.16	0.16	1.24	82	3.12	0.98	82	1.5	83	0.100	100	100	4.6	0	617	312	352	405	391	415	978	294	73	58	72	59	73	-0.050	2.6	0.08
182	29.165	29.104	0.16	0.16	1.24	82	3.13	0.99	82	1.5	83	0.100	100	100	4.5	-0.1	612	312	353	405	392	415	973	291	73	58	72	59	73	-0.050	2.57	0.08
183	29.326	29.265	0.16	0.16	1.24	82	3.11	0.99	82	1.5	83	0.099	101	101	4.5	0	607	313	353	405	392	414	969	290	73	58	72	59	72	-0.049	2.58	0.08
184	29.486	29.425	0.16	0.16	1.24	82	3.12	0.98	82	1.5	83	0.099	100	100	4.4	-0.1	603	313	354	406	392	414	966	289	73	58	72	59	73	-0.049	2.58	0.08
185	29.647	29.586	0.16	0.16	1.24	82	3.12	0.98	82	1.5	83	0.102	99	99	4.4	0	599	314	355	406	393	413	962	287	73	58	72	59	73	-0.049	2.56	0.08
186	29.808	29.747	0.16	0.16	1.24	82	3.11	0.98	82	1.5	83	0.101	100	100	4.4	0	596	314	355	406	393	413	959	286	73	58	72	59	72	-0.049	2.55	0.08
187	29.968	29.906	0.16	0.16	1.24	82	3.12	0.98	82	1.5	82	0.101	99	99	4.3	-0.1	592	314	356	406	393	412	957	285	73	58	72	59	72	-0.049	2.55	0.08
188	30.128	30.067	0.16	0.16	1.24	82	3.12	0.99	82	1.5	82	0.101	99	100	4.3	0	589	315	356	407	393	412	954	285	73	58	72	59	72	-0.049	2.59	0.08
189	30.289	30.228	0.16	0.16	1.24	82	3.11	0.99	82	1.5	82	0.099	101	101	4.2	-0.1	586	315	357	407	393	412	952	283	73	58	72	59	72	-0.049	2.62	0.08
190	30.449	30.388	0.16	0.16	1.24	82	3.12	0.98	82	1.5	83	0.100	100	100	4.2	0	584	316	358	407	394	412	951	282	73	58	72	59	73	-0.048	2.6	0.08
191	30.610	30.547	0.16	0.16	1.24	82	3.13	0.99	82	1.5	83	0.101	100	99	4.1	-0.1	581	316	358	407	394	411	949	282	73	58	72	59	72	-0.049	2.59	0.08
192	30.771	30.708	0.16	0.16	1.24	82	3.11	0.98	82	1.5	82	0.101	100	100	4.1	0	579	316	358	407	394	411	948	281	73	58	72	59	72	-0.048	2.59	0.08
193	30.931	30.869	0.16	0.16	1.24	82	3.12	0.98	82	1.5	82	0.102	99	99	4.1	0	577	317	359	408	394	411	947	280	73	58	72	59	73	-0.048	2.63	0.08
194	31.091	31.029	0.16	0.16	1.24	82	3.11	0.98	83	1.5	82	0.103	98	98	4.0	-0.1	576	317	359	408	394	411	947	280	73	58	72	59	72	-0.048	2.61	0.08
195	31.252	31.189	0.16	0.16	1.24	82	3.12	0.98	82	1.5	82	0.100	100	100	4.0	0	574	318	360	408	395	411	946	279	73	58	72	59	72	-0.048	2.62	0.08
196	31.413	31.350	0.16	0.16	1.24	82	3.11	0.98	82	1.5	82	0.102	99	99	3.9	-0.1	573	318	360	408	395	411	946	278	73	58	72	59	72	-0.047	2.6	0.08
197	31.574	31.510	0.16	0.16	1.23	83	3.11	0.98	83	1.5	82	0.100	100	100	3.9	0	571	318	360	408	395	410	944	277	73	58	72	59	73	-0.048	2.54	0.08
198	31.734	31.670	0.16	0.16	1.24	82	3.11	0.99	83	1.5	82	0.094	103	103	3.8	-0.1	569	319	361	408	395	410	941	276	73	58	72	59	73	-0.048	2.54	0.08
199	31.894	31.831	0.16	0.16	1.24	83	3.12	0.98	83	1.5	82	0.100	99	100	3.8	0	567	319	361	408	395	410	939	275	73	58	72	59	72	-0.047	2.51	0.08
200	32.054	31.991	0.16	0.16	1.24	83	3.13	0.98	83	1.5	82	0.100	99	100	3.8	0	565	320	361	408	396	410	936	275	73	58	72	59	73	-0.047	2.48	0.08
201	32.216	32.151	0.16	0.16	1.25	83	3.12	0.98	83	1.5	82	0.099	101	100	3.7	-0.1	563	320	361	408	396	410	934	274	73	58	72	59	73	-0.047	2.49	0.08
202	32.376	32.313	0.16	0.16	1.24	83	3.12	0.98	83	1.5	82	0.102	98	100	3.7	0	560	320	361	408	396	409	931	272	73	58	72	59	73	-0.047	2.46	0.08
203	32.536	32.472	0.16	0.16	1.24	83	3.12	0.98	83	1.5	82	0.101	99	98	3.6	-0.1	558	321	362	409	396	409	929	272	73	58	72	59	73	-0.047	2.46	0.08
204	32.696	32.633	0.16	0.16	1.24	83	3.12	0.99	83	1.5	82	0.101	99	100	3.6	0	557	321	362	409	396	409	927	272	73	58	72	59	72	-0.047	2.48	0.08
205	32.857	32.794	0.16	0.16	1.24	83	3.11	0.98	83	1.5	82	0.100	100	100	3.6	0	555	322	362	408	396	409	926	270	73	58	72	59	73	-0.047	2.48	0.08
206	33.018	32.954	0.16	0.16	1.24	83	3.11	0.98	83	1.5	82	0.098	101	101	3.5	-0.1	554	322	362	408	396	408	925	270	73	58	72	59	73	-0.046	2.48	0.08
207	33.179	33.113	0.16	0.16	1.24	83	3.11	0.98	83	1.5	82	0.097	102	100	3.5	0	552	322	362	408	397	408	924	270	73	58	72	59	73	-0.047	2.49	0.08
208	33.339	33.274	0.16	0.16	1.24	83	3.11	0.98	83	1.5	82	0.099	100	101	3.5	0	552	323	363	408	397	409	925	270	73	58	72	59	73	-0.047	2.51	0.08
209	33.499	33.435	0.16	0.16	1.25	83	3.11	0.98	83	1.5	82	0.100	99	100	3.4	-0.1	552	323	363	408	397	409	927	270	73	58	72	59	73	-0.047	2.55	0.08
210	33.660	33.595	0.16	0.16	1.24	83	3.11	0.98	83	1.5	82	0.103	99	98	3.4	0	553	323	363	408	397	409	930	271	73	58	72	59	73	-0.047	2.59	0.08
211	33.821	33.755	0.16	0.16	1.24	83	3.11	0.98	83	1.5	82	0.102	99	99	3.3	-0.1	555	324	364	408	397	410	933	271	73	58	72	59	73	-0.047	2.64	0.08
212	33.981	33.916	0.16	0.16	1.25	83	3.11	0.98	83	1.5	82	0.101	99	100	3.3	0	557	324	364	408	397	410	937	271	73	58	72	59	73	-0.047	2.63	0.08
213	34.141	34.076	0.16	0.16	1.24	83	3.11	0.98	83	1.5	82	0.101	99	99	3.3	0	557	325	364	408	397	410	939	272	73	58	72	59	73	-0.047	2.55	0.08
214	34.302	34.236	0.16	0.16	1.24	83	3.12	0.98	83	1.5	82	0.101	100	99	3.2	-0.1	557	325	364	408	397	410	938	270	73	58	72	59	72	-0.047	2.5	0.08
215	34.462	34.397	0.16	0.16	1.24	83	3.12	0.98	83	1.5	82	0.101	99	100	3.2	0	558	325	365	408	397	411	937	270	73	58	72	59	72	-0.047	2.51	0.08
216	34.624	34.557	0.16	0.16	1.24	83	3.12	0.99	83	1.5	82	0.098	102	101	3.1	-0.1	558	326	365	407	397	411	936	270	73	58	72	59	73	-0.047	2.46	0.08

Wood Heater Test Data

u

Run: 5

Manufacturer: Kuma Stoves
Model: K-251
Tracking No.: 2464
Project No.: 0123WM014E
Test Date: 02-May-23
Beginning Clock Time: 11:58

Total Sampling Time: 382 min
Recording Interval: 1 min
Tunnel Diameter: 6
Background Sample Volume: 59.605 cubic feet

PM Control Modules: 335,336
Dilution Tunnel MW(dry): 29.00 lb/lb-mole
Dilution Tunnel MW(wet): 28.78 lb/lb-mole
Dilution Tunnel H2O: 2.00 percent
Dilution Tunnel Static: -0.280 "H2O
Tunnel Area: 0.19635 ft2
Pitot Tube Cp: 0.99

Avg. Tunnel Velocity: 18.62 ft/sec.
Initial Tunnel Flow: 212.2 scfm
Average Tunnel Flow: 208.3 scfm
Post-Test Leak Check (1st Hr): 0.000 cfm @ 15 in. Hg
Post-Test Leak Check (1): 0.001 cfm @ 14 in. Hg
Post-Test Leak Check (2): 0.000 cfm @ 10 in. Hg
Average Test Piece Fuel Moisture: 22.56 Dry Basis %

Technician Signature:_____

Export to PDF

Meter Box Y Factor: 1.007 (1) 1.015 (2) 1.012 (Amb)

Barometric Pressure:	Begin	Middle	End	Average
	29.71		29.80	29.76

Room Air Velocity, fpn
<50

OMNI Equipment Numbers: _____

Velocity Traverse Data

	Pt.1	Pt.2	Pt.3	Pt.4	Pt.5	Pt.6	Pt.7	Pt.8	Center	
Initial dP	0.064	0.098	0.090	0.066	0.052	0.092	0.092	0.082	0.103	"H2O
Temp:	77	77	77	77	77	77	77	77	76	°F

V_{strav} 18.82 ft/sec V_{scent} 21.51 ft/sec F_p 0.875

qwq

	Particulate Sampling Data														Fuel Weight (lb)		Temperature Data (°F)													Stack Gas Data		
Elapsed Time (min)	Gas Meter 1 (ft^3)	Gas Meter 2 (ft^3)	Sample Rate 1 (cfm)	Sample Rate 2 (cfm)	Orifice dH 1 ("H_2O)	Meter 1 Temp (°F)	Meter 1 Vacuum ("Hg)	Orifice dH 2 ("H_2O)	Meter 2 Temp (°F)	Meter 2 Vacuum ("Hg)	Dilution Tunnel (°F)	Dilution Tunnel Center dP	Pro. Rate 1	Pro. Rate 2	Scale Reading	Weight Change	Firebox Top	Firebox Bottom	Firebox Back	Firebox Left	Firebox Right	Avg. Stove Surface (Tot = ΔT)	Catalyst Exit	Stack	Filter 1	Dryer Exit 1	Filter 2	Dryer Exit 2	Ambient	Draft ("H_2O)	CO_2 (%)	CO (%)
217	34.784	34.718	0.16	0.16	1.24	83	3.12	0.98	83	1.5	82	0.099	100	101	3.1	0	557	326	366	407	397	411	934	270	73	58	72	59	73	-0.047	2.44	0.08
218	34.945	34.879	0.16	0.16	1.24	83	3.12	0.98	83	1.5	82	0.102	99	99	3.1	0	555	327	366	407	397	410	931	269	73	58	72	59	73	-0.047	2.39	0.07
219	35.105	35.039	0.16	0.16	1.24	83	3.11	0.98	83	1.5	82	0.098	100	101	3.0	-0.1	553	327	366	407	397	410	927	268	73	58	72	59	73	-0.046	2.38	0.07
220	35.266	35.199	0.16	0.16	1.24	83	3.13	0.99	83	1.5	82	0.102	99	99	3.0	0	551	327	367	407	397	410	921	267	73	58	72	59	73	-0.046	2.37	0.07
221	35.427	35.360	0.16	0.16	1.24	83	3.12	0.98	83	1.5	82	0.100	100	100	3.0	0	548	328	367	406	397	409	916	266	73	58	72	59	73	-0.046	2.36	0.07
222	35.588	35.520	0.16	0.16	1.24	83	3.12	0.98	83	1.5	82	0.100	100	100	2.9	-0.1	545	328	367	406	397	409	911	265	73	58	72	59	73	-0.046	2.35	0.07
223	35.748	35.680	0.16	0.16	1.24	83	3.12	0.98	83	1.5	82	0.103	98	98	2.9	0	542	328	368	406	397	408	906	264	73	58	72	59	73	-0.046	2.32	0.07
224	35.909	35.841	0.16	0.16	1.24	83	3.12	0.98	83	1.5	82	0.102	99	99	2.9	0	538	329	368	406	397	408	900	263	73	58	72	59	73	-0.045	2.3	0.07
225	36.069	36.002	0.16	0.16	1.25	83	3.13	0.98	83	1.5	82	0.102	98	99	2.9	0	534	329	368	405	397	407	895	263	73	58	72	59	73	-0.045	2.27	0.07
226	36.230	36.162	0.16	0.16	1.25	83	3.13	0.98	83	1.5	82	0.100	100	100	2.8	-0.1	531	329	368	405	396	406	889	261	73	58	72	59	73	-0.046	2.24	0.07
227	36.391	36.322	0.16	0.16	1.24	83	3.11	0.98	83	1.5	82	0.101	100	99	2.8	0	528	330	368	405	396	405	884	260	73	58	72	59	73	-0.045	2.25	0.07
228	36.552	36.483	0.16	0.16	1.24	83	3.11	0.98	83	1.5	82	0.100	100	100	2.8	0	524	330	369	405	396	405	879	259	73	58	72	59	73	-0.045	2.24	0.07
229	36.712	36.643	0.16	0.16	1.25	83	3.13	0.99	83	1.5	82	0.099	100	100	2.7	-0.1	521	330	369	404	396	404	874	257	73	58	72	59	73	-0.045	2.23	0.07
230	36.872	36.804	0.16	0.16	1.25	83	3.11	0.99	83	1.5	81	0.101	99	100	2.7	0	517	331	369	404	396	403	870	257	73	58	72	59	73	-0.044	2.21	0.07
231	37.033	36.965	0.16	0.16	1.25	83	3.12	0.98	83	1.5	81	0.101	99	100	2.7	0	515	331	369	404	396	403	866	256	73	58	72	59	73	-0.045	2.23	0.07
232	37.195	37.125	0.16	0.16	1.25	83	3.12	0.98	83	1.5	81	0.092	105	104	2.7	0	512	331	369	404	396	402	863	255	73	58	72	59	73	-0.044	2.24	0.07
233	37.355	37.285	0.16	0.16	1.24	83	3.13	0.98	83	1.5	81	0.101	99	99	2.6	-0.1	509	331	369	403	395	401	859	254	73	58	72	59	73	-0.045	2.22	0.07
234	37.516	37.446	0.16	0.16	1.24	83	3.11	0.98	83	1.5	81	0.103	98	99	2.6	0	506	332	370	403	395	401	857	254	73	58	72	59	73	-0.045	2.23	0.07
235	37.676	37.607	0.16	0.16	1.25	83	3.12	0.98	83	1.5	81	0.099	100	101	2.6	0	504	332	369	403	395	401	854	253	73	58	72	59	73	-0.044	2.24	0.07
236	37.837	37.767	0.16	0.16	1.24	83	3.13	0.98	83	1.5	81	0.102	99	98	2.5	-0.1	502	332	370	402	395	400	852	252	73	58	72	59	73	-0.045	2.27	0.07
237	37.998	37.927	0.16	0.16	1.25	83	3.11	0.98	83	1.5	81	0.100	100	99	2.5	0	500	332	370	402	395	400	851	253	73	58	72	59	73	-0.044	2.28	0.07
238	38.159	38.088	0.16	0.16	1.24	83	3.12	0.98	83	1.5	81	0.101	99	100	2.5	0	498	332	370	402	395	399	849	252	73	58	72	59	73	-0.044	2.29	0.07
239	38.319	38.248	0.16	0.16	1.24	83	3.12	0.98	83	1.5	81	0.099	100	100	2.5	0	498	332	370	402	395	399	848	251	73	58	72	59	73	-0.044	2.29	0.07
240	38.480	38.409	0.16	0.16	1.24	83	3.13	0.98	83	1.5	81	0.098	101	101	2.4	-0.1	496	333	371	402	395	399	847	252	73	58	72	59	73	-0.044	2.31	0.07
241	38.640	38.570	0.16	0.16	1.25	83	3.13	0.98	83	1.5	81	0.102	98	99	2.4	0	495	333	370	401	395	399	845	251	73	58	72	59	73	-0.044	2.37	0.08
242	38.801	38.730	0.16	0.16	1.25	83	3.13	0.98	83	1.5	81	0.102	99	98	2.4	0	494	333	371	401	395	399	845	251	73	58	72	59	73	-0.044	2.38	0.08
243	38.963	38.891	0.16	0.16	1.24	83	3.12	0.98	83	1.5	81	0.097	102	102	2.3	-0.1	494	333	370	401	395	399	846	251	73	58	72	59	73	-0.044	2.36	0.08
244	39.123	39.052	0.16	0.16	1.24	83	3.12	0.99	83	1.5	81	0.102	98	99	2.3	0	493	334	371	400	395	399	846	251	73	58	72	59	73	-0.044	2.38	0.08
245	39.283	39.212	0.16	0.16	1.24	83	3.12	0.98	83	1.5	81	0.100	99	99	2.3	0	493	334	371	400	395	399	847	251	73	58	72	59	73	-0.044	2.41	0.08
246	39.444	39.372	0.16	0.16	1.25	83	3.13	0.99	83	1.5	81	0.103	98	98	2.2	-0.1	493	334	371	400	395	399	848	251	73	58	72	59	73	-0.044	2.44	0.08
247	39.604	39.533	0.16	0.16	1.24	83	3.12	0.98	83	1.5	81	0.103	98	99	2.2	0	494	334	371	399	395	399	850	251	73	58	72	59	73	-0.044	2.42	0.08
248	39.766	39.693	0.16	0.16	1.24	83	3.12	0.98	83	1.5	81	0.100	101	99	2.2	0	494	335	371	399	395	399	852	251	73	58	72	59	72	-0.044	2.42	0.08
249	39.927	39.853	0.16	0.16	1.24	83	3.12	0.98	83	1.5	81	0.102	99	98	2.2	0	495	335	372	399	395	399	854	252	73	58	72	59	73	-0.044	2.38	0.08
250	40.087	40.014	0.16	0.16	1.24	83	3.13	0.98	83	1.5	81	0.099	100	101	2.1	-0.1	496	335	372	398	395	399	855	252	73	58	72	59	73	-0.044	2.4	0.08
251	40.247	40.175	0.16	0.16	1.24	83	3.12	0.98	83	1.5	81	0.100	99	100	2.1	0	496	335	372	398	395	399	856	252	73	58	72	59	73	-0.043	2.4	0.08
252	40.408	40.335	0.16	0.16	1.25	83	3.11	0.98	83	1.5	81	0.102	99	98	2.1	0	497	335	372	398	395	399	856	251	73	58	72	59	73	-0.044	2.38	0.08
253	40.569	40.495	0.16	0.16	1.25	83	3.12	0.99	83	1.5	81	0.101	99	99	2.0	-0.1	497	336	372	397	395	399	857	252	73	58	72	59	73	-0.044	2.39	0.08
254	40.730	40.657	0.16	0.16	1.25	83	3.12	0.98	83	1.5	81	0.100	100	101	2.0	0	497	336	373	397	395	400	857	252	73	58	72	59	73	-0.044	2.37	0.08
255	40.891	40.816	0.16	0.16	1.24	83	3.12	0.98	83	1.5	81	0.103	98	97	2.0	0	497	336	373	397	395	400	857	251	73	58	72	59	73	-0.044	2.35	0.08
256	41.051	40.977	0.16	0.16	1.24	83	3.12	0.99	83	1.5	81	0.101	99	100	1.9	-0.1	497	337	373	396	395	400	856	251	73	58	72	59	73	-0.044	2.33	0.08
257	41.211	41.138	0.16	0.16	1.25	83	3.12	0.98	83	1.5	81	0.102	98	99	1.9	0	496	337	373	396	395	399	855	251	73	58	72	59	73	-0.043	2.34	0.08
258	41.372	41.298	0.16	0.16	1.25	83	3.13	0.98	83	1.5	81	0.101	99	99	1.9	0	496	337	373	396	395	399	853	250	73	58	72	59	73	-0.043	2.31	0.07
259	41.534	41.458	0.16	0.16	1.24	83	3.11	0.98	83	1.5	81	0.099	101	100	1.8	-0.1	495	338	373	395	396	399	852	250	73	58	72	59	73	-0.043	2.27	0.07
260	41.694	41.619	0.16	0.16	1.24	83	3.12	0.98	83	1.5	81	0.098	100	101	1.8	0	494	338	373	395	395	399	850	250	73	58	72	59	73	-0.043	2.27	0.07

Wood Heater Test Data

u

Run: 5

Manufacturer: Kuma Stoves
Model: K-251
Tracking No.: 2464
Project No.: 0123WM014E
Test Date: 02-May-23
Beginning Clock Time: 11:58

Total Sampling Time: 382 min
Recording Interval: 1 min
Tunnel Diameter: 6
Background Sample Volume: 59.605 cubic feet

PM Control Modules: 335,336
Dilution Tunnel MW(dry): 29.00 lb/lb-mole
Dilution Tunnel MW(wet): 28.78 lb/lb-mole
Dilution Tunnel H2O: 2.00 percent
Dilution Tunnel Static: -0.280 "H2O
Tunnel Area: 0.19635 ft2
Pitot Tube Cp: 0.99

Avg. Tunnel Velocity: 18.62 ft/sec.
Initial Tunnel Flow: 212.2 scfm
Average Tunnel Flow: 208.3 scfm
Post-Test Leak Check (1st Hr): 0.000 cfm @ 15 in. Hg
Post-Test Leak Check (1): 0.001 cfm @ 14 in. Hg
Post-Test Leak Check (2): 0.000 cfm @ 10 in. Hg
Average Test Piece Fuel Moisture: 22.56 Dry Basis %

Technician Signature:_____

Meter Box Y Factor: 1.007 (1) 1.015 (2) 1.012 (Amb)

Barometric Pressure:

Begin	Middle	End	Average
29.71		29.80	29.76

Room Air Velocity, fpn
<50

OMNI Equipment Numbers: _____

Velocity Traverse Data

	Pt.1	Pt.2	Pt.3	Pt.4	Pt.5	Pt.6	Pt.7	Pt.8	Center	
Initial dP	0.064	0.098	0.090	0.066	0.052	0.092	0.092	0.082	0.103	"H2O
Temp:	77	77	77	77	77	77	77	77	76	°F

V_{strav} 18.82 ft/sec V_{scent} 21.51 ft/sec F_p 0.875

qwq

	Particulate Sampling Data														Fuel Weight (lb)		Temperature Data (°F)													Stack Gas Data		
Elapsed Time (min)	Gas Meter 1 (ft^3)	Gas Meter 2 (ft^3)	Sample Rate 1 (cfm)	Sample Rate 2 (cfm)	Orifice dH 1 ("H_2O)	Meter 1 Temp (°F)	Meter 1 Vacuum ("Hg)	Orifice dH 2 ("H_2O)	Meter 2 Temp (°F)	Meter 2 Vacuum ("Hg)	Dilution Tunnel (°F)	Dilution Tunnel Center dP	Pro. Rate 1	Pro. Rate 2	Scale Reading	Weight Change	Firebox Top	Firebox Bottom	Firebox Back	Firebox Left	Firebox Right	Avg. Stove Surface (Tot = ΔT)	Catalyst Exit	Stack	Filter 1	Dryer Exit 1	Filter 2	Dryer Exit 2	Ambient	Draft ("H_2O)	CO_2 (%)	CO (%)
261	41.854	41.780	0.16	0.16	1.24	83	3.12	0.98	83	1.5	81	0.099	100	101	1.8	0	492	338	373	395	395	399	848	249	73	58	72	59	73	-0.044	2.25	0.07
262	42.015	41.940	0.16	0.16	1.25	83	3.12	0.98	83	1.5	81	0.101	99	99	1.8	0	490	339	373	394	395	398	845	247	73	58	72	59	73	-0.043	2.22	0.07
263	42.175	42.100	0.16	0.16	1.25	83	3.12	0.98	83	1.5	81	0.099	100	100	1.8	0	489	339	374	394	395	398	841	247	73	58	72	59	73	-0.043	2.18	0.07
264	42.337	42.261	0.16	0.16	1.25	83	3.12	0.98	83	1.5	80	0.101	100	99	1.7	-0.1	487	339	373	394	395	398	836	246	73	58	72	59	73	-0.043	2.16	0.07
265	42.497	42.421	0.16	0.16	1.24	83	3.12	0.98	83	1.5	80	0.098	100	100	1.7	0	484	340	374	393	395	397	832	244	73	58	72	59	73	-0.042	2.15	0.07
266	42.658	42.582	0.16	0.16	1.24	83	3.12	0.98	83	1.5	80	0.099	100	100	1.7	0	482	340	374	393	395	397	827	244	73	58	72	59	73	-0.043	2.13	0.07
267	42.818	42.743	0.16	0.16	1.25	83	3.12	0.98	83	1.5	81	0.095	102	103	1.7	0	479	340	374	393	395	396	821	243	73	58	72	59	73	-0.042	2.11	0.07
268	42.979	42.903	0.16	0.16	1.24	83	3.13	0.98	83	1.5	80	0.101	99	99	1.7	0	476	341	374	392	395	396	817	242	73	58	72	59	73	-0.042	2.09	0.07
269	43.140	43.063	0.16	0.16	1.25	83	3.13	0.98	83	1.5	80	0.099	100	100	1.6	-0.1	473	341	374	392	395	395	812	240	73	58	72	59	73	-0.042	2.07	0.07
270	43.301	43.224	0.16	0.16	1.24	83	3.13	0.98	83	1.5	81	0.101	99	100	1.6	0	470	342	373	392	395	394	808	239	73	58	72	59	73	-0.042	2.07	0.07
271	43.461	43.385	0.16	0.16	1.24	83	3.12	0.98	83	1.5	80	0.099	100	100	1.6	0	468	342	374	391	395	394	804	238	73	58	72	59	73	-0.041	2.07	0.07
272	43.622	43.544	0.16	0.16	1.24	83	3.12	0.99	83	1.5	81	0.102	99	98	1.6	0	465	343	374	391	395	394	800	238	73	58	72	59	73	-0.041	2.06	0.06
273	43.782	43.706	0.16	0.16	1.24	83	3.11	0.98	83	1.5	80	0.100	99	101	1.6	0	463	343	374	390	394	393	796	236	73	58	72	59	73	-0.041	2.05	0.06
274	43.943	43.866	0.16	0.16	1.25	83	3.12	0.98	83	1.5	80	0.094	103	102	1.5	-0.1	460	343	374	390	394	392	793	236	73	58	72	59	73	-0.041	2.07	0.07
275	44.104	44.026	0.16	0.16	1.24	83	3.11	0.98	83	1.5	80	0.101	99	99	1.5	0	458	344	374	390	394	392	790	236	73	58	72	59	73	-0.041	2.07	0.06
276	44.265	44.187	0.16	0.16	1.24	83	3.13	0.99	83	1.5	80	0.099	100	100	1.5	0	456	344	374	389	394	391	787	234	73	58	72	59	73	-0.041	2.05	0.06
277	44.425	44.348	0.16	0.16	1.24	83	3.12	0.98	83	1.5	80	0.102	98	99	1.5	0	453	345	374	389	394	391	784	234	73	58	72	59	73	-0.041	2.04	0.06
278	44.585	44.508	0.16	0.16	1.25	83	3.13	0.98	83	1.5	80	0.101	99	99	1.5	0	451	345	374	388	394	390	781	233	73	58	72	59	73	-0.040	2.02	0.06
279	44.746	44.668	0.16	0.16	1.25	83	3.13	0.98	83	1.5	80	0.101	99	99	1.5	0	449	346	374	388	393	390	779	232	73	58	72	59	73	-0.041	2.03	0.06
280	44.908	44.830	0.16	0.16	1.24	83	3.12	0.98	83	1.5	80	0.100	100	101	1.5	0	447	346	374	387	393	389	776	231	73	58	72	59	73	-0.040	2.01	0.06
281	45.068	44.990	0.16	0.16	1.25	83	3.12	0.98	83	1.5	80	0.102	98	98	1.4	-0.1	445	347	374	387	393	389	774	230	73	58	72	59	73	-0.040	2.01	0.06
282	45.228	45.150	0.16	0.16	1.24	83	3.12	0.99	83	1.5	80	0.098	100	100	1.4	0	443	347	374	387	393	389	771	230	73	58	72	59	73	-0.040	1.99	0.06
283	45.389	45.311	0.16	0.16	1.24	83	3.11	0.98	83	1.5	80	0.101	99	99	1.4	0	441	347	374	386	392	388	768	229	73	58	72	59	72	-0.041	1.98	0.06
284	45.549	45.472	0.16	0.16	1.24	83	3.11	0.98	83	1.5	79	0.101	99	99	1.4	0	440	348	374	386	392	388	766	230	73	58	72	59	73	-0.041	1.98	0.06
285	45.711	45.631	0.16	0.16	1.24	83	3.13	0.98	83	1.5	79	0.102	99	98	1.4	0	438	348	373	385	392	387	764	229	73	58	72	59	73	-0.041	2	0.06
286	45.871	45.792	0.16	0.16	1.24	83	3.12	0.98	83	1.5	79	0.097	101	101	1.4	0	436	349	373	385	392	387	762	228	73	58	72	59	73	-0.040	2.02	0.06
287	46.031	45.953	0.16	0.16	1.24	83	3.12	0.98	83	1.5	79	0.102	98	99	1.3	-0.1	435	349	373	384	391	386	760	227	73	58	72	59	73	-0.040	2.01	0.06
288	46.192	46.113	0.16	0.16	1.24	83	3.11	0.98	83	1.5	79	0.100	100	99	1.3	0	433	350	373	384	391	386	759	227	73	58	72	59	73	-0.040	2.01	0.06
289	46.352	46.274	0.16	0.16	1.24	83	3.12	0.98	83	1.5	79	0.100	99	100	1.3	0	432	350	372	383	391	386	757	227	73	58	72	59	73	-0.040	2.02	0.06
290	46.514	46.435	0.16	0.16	1.24	83	3.12	0.98	83	1.5	79	0.101	100	99	1.3	0	431	351	372	383	390	385	756	226	73	58	72	59	73	-0.040	2.01	0.06
291	46.675	46.595	0.16	0.16	1.25	83	3.12	0.98	83	1.5	79	0.097	101	101	1.3	0	429	351	372	382	390	385	755	227	73	58	72	59	73	-0.040	2.02	0.06
292	46.835	46.756	0.16	0.16	1.24	83	3.12	0.98	83	1.5	79	0.105	97	97	1.3	0	429	352	371	382	389	385	753	226	73	58	72	59	73	-0.040	2.03	0.06
293	46.995	46.917	0.16	0.16	1.24	83	3.13	0.98	83	1.5	79	0.103	98	98	1.2	-0.1	427	352	370	381	389	384	752	225	73	58	72	59	73	-0.040	2.01	0.06
294	47.156	47.077	0.16	0.16	1.24	83	3.13	0.98	83	1.5	79	0.101	99	99	1.2	0	426	353	370	381	389	384	750	225	73	58	72	59	73	-0.040	2.02	0.06
295	47.317	47.237	0.16	0.16	1.25	83	3.13	0.99	83	1.5	80	0.097	101	101	1.2	0	425	353	370	381	388	383	749	224	73	58	72	59	73	-0.039	2	0.06
296	47.478	47.398	0.16	0.16	1.25	83	3.11	0.98	83	1.5	80	0.097	101	101	1.2	0	424	354	370	380	388	383	748	224	73	58	72	59	73	-0.039	2.03	0.06
297	47.639	47.559	0.16	0.16	1.24	83	3.13	0.98	83	1.5	80	0.101	99	99	1.2	0	423	355	370	380	387	383	747	224	73	58	72	59	73	-0.039	2	0.06
298	47.799	47.719	0.16	0.16	1.24	83	3.11	0.98	83	1.5	80	0.098	100	100	1.2	0	423	355	369	379	387	383	746	223	73	58	72	59	73	-0.039	1.99	0.06
299	47.959	47.880	0.16	0.16	1.24	83	3.13	0.98	83	1.5	80	0.098	100	101	1.1	-0.1	422	356	369	379	387	383	745	223	73	58	72	59	73	-0.039	2	0.06
300	48.120	48.041	0.16	0.16	1.25	83	3.13	0.98	83	1.5	80	0.102	99	99	1.1	0	421	356	368	378	386	382	743	223	73	58	72	59	73	-0.039	1.99	0.06
301	48.282	48.201	0.16	0.16	1.25	83	3.12	0.98	83	1.5	79	0.100	100	99	1.1	0	420	356	369	378	386	382	742	222	73	58	72	59	73	-0.039	1.99	0.06
302	48.442	48.362	0.16	0.16	1.24	83	3.13	0.98	83	1.5	79	0.099	100	100	1.1	0	419	357	368	378	386	382	741	222	73	58	72	59	73	-0.039	2	0.06
303	48.603	48.523	0.16	0.16	1.24	83	3.12	0.98	83	1.5	79	0.102	99	99	1.1	0	418	357	368	377	385	381	740	222	73	58	72	59	73	-0.039	1.98	0.06
304	48.763	48.684	0.16	0.16	1.24	83	3.13	0.98	83	1.5	79	0.100	99	100	1.1	0	417	358	367	377	385	381	739	222	73	58	72	59	73	-0.039	1.96	0.06

Wood Heater Test Data

u

Run: 5

Manufacturer: Kuma Stoves
Model: K-251
Tracking No.: 2464
Project No.: 0123WM014E
Test Date: 02-May-23
Beginning Clock Time: 11:58

Total Sampling Time: 382 min
Recording Interval: 1 min
Tunnel Diameter: 6
Background Sample Volume: 59.605 cubic feet

PM Control Modules: 335,336
Dilution Tunnel MW(dry): 29.00 lb/lb-mole
Dilution Tunnel MW(wet): 28.78 lb/lb-mole
Dilution Tunnel H2O: 2.00 percent
Dilution Tunnel Static: -0.280 "H2O
Tunnel Area: 0.19635 ft2
Pitot Tube Cp: 0.99

Avg. Tunnel Velocity: 18.62 ft/sec.
Initial Tunnel Flow: 212.2 scfm
Average Tunnel Flow: 208.3 scfm
Post-Test Leak Check (1st Hr): 0.000 cfm @ 15 in. Hg
Post-Test Leak Check (1): 0.001 cfm @ 14 in. Hg
Post-Test Leak Check (2): 0.000 cfm @ 10 in. Hg
Average Test Piece Fuel Moisture: 22.56 Dry Basis %

Technician Signature:_____

Export to PDF

Meter Box Y Factor: 1.007 (1) 1.015 (2) 1.012 (Amb)

Barometric Pressure:	Begin	Middle	End	Average
	29.71		29.80	29.76

Room Air Velocity, fpn
<50

OMNI Equipment Numbers: _____

Velocity Traverse Data

	Pt.1	Pt.2	Pt.3	Pt.4	Pt.5	Pt.6	Pt.7	Pt.8	Center	
Initial dP	0.064	0.098	0.090	0.066	0.052	0.092	0.092	0.082	0.103	"H2O
Temp:	77	77	77	77	77	77	77	77	76	°F

V_{strav} 18.82 ft/sec V_{scent} 21.51 ft/sec F_p 0.875

qwq

	Particulate Sampling Data														Fuel Weight (lb)		Temperature Data (°F)													Stack Gas Data		
Elapsed Time (min)	Gas Meter 1 (ft^3)	Gas Meter 2 (ft^3)	Sample Rate 1 (cfm)	Sample Rate 2 (cfm)	Orifice dH 1 ("H_2O)	Meter 1 Temp (°F)	Meter 1 Vacuum ("Hg)	Orifice dH 2 ("H_2O)	Meter 2 Temp (°F)	Meter 2 Vacuum ("Hg)	Dilution Tunnel (°F)	Dilution Tunnel Center dP	Pro. Rate 1	Pro. Rate 2	Scale Reading	Weight Change	Firebox Top	Firebox Bottom	Firebox Back	Firebox Left	Firebox Right	Avg. Stove Surface (Tot = ΔT)	Catalyst Exit	Stack	Filter 1	Dryer Exit 1	Filter 2	Dryer Exit 2	Ambient	Draft ("H_2O)	CO_2 (%)	CO (%)
305	48.924	48.844	0.16	0.16	1.24	83	3.11	0.98	83	1.5	79	0.103	98	98	1.1	0	417	358	367	376	385	381	737	222	73	58	72	59	73	-0.039	1.98	0.06
306	49.085	49.005	0.16	0.16	1.25	83	3.13	0.98	83	1.5	79	0.099	100	100	1.0	-0.1	416	359	367	376	384	380	736	221	73	58	72	59	73	-0.039	1.97	0.06
307	49.246	49.165	0.16	0.16	1.24	83	3.13	0.98	83	1.5	79	0.099	100	100	1.0	0	415	359	366	375	384	380	735	221	73	58	72	59	73	-0.039	1.98	0.06
308	49.407	49.325	0.16	0.16	1.24	83	3.12	0.98	83	1.5	80	0.101	99	99	1.0	0	414	359	366	375	383	379	734	219	73	58	72	59	73	-0.038	1.96	0.06
309	49.567	49.486	0.16	0.16	1.24	83	3.13	0.98	83	1.5	79	0.100	99	100	1.0	0	413	359	365	374	383	379	733	220	73	58	72	59	73	-0.039	1.94	0.06
310	49.728	49.647	0.16	0.16	1.24	83	3.13	0.98	83	1.5	79	0.101	99	99	1.0	0	412	360	365	374	383	379	731	219	73	58	72	59	73	-0.039	1.95	0.06
311	49.888	49.808	0.16	0.16	1.24	83	3.12	0.98	83	1.5	79	0.100	99	100	1.0	0	411	360	364	374	382	378	730	219	73	58	72	59	73	-0.039	1.94	0.06
312	50.050	49.968	0.16	0.16	1.24	83	3.12	0.98	83	1.5	79	0.100	100	99	1.0	0	410	360	365	373	382	378	728	219	73	58	72	59	73	-0.038	1.94	0.06
313	50.211	50.130	0.16	0.16	1.24	83	3.12	0.98	83	1.5	79	0.099	100	101	0.9	-0.1	409	360	364	373	382	378	727	218	73	58	72	59	73	-0.039	1.94	0.06
314	50.371	50.289	0.16	0.16	1.24	83	3.13	0.98	83	1.5	79	0.098	100	100	0.9	0	409	361	363	372	381	377	726	218	73	58	72	59	73	-0.038	1.95	0.06
315	50.531	50.450	0.16	0.16	1.24	83	3.12	0.98	83	1.5	79	0.100	99	100	0.9	0	408	361	363	372	381	377	725	218	73	58	72	59	73	-0.039	1.96	0.06
316	50.692	50.611	0.16	0.16	1.25	83	3.13	0.98	83	1.5	79	0.101	99	99	0.9	0	407	361	363	371	381	377	724	218	73	58	72	59	73	-0.038	1.96	0.06
317	50.854	50.772	0.16	0.16	1.25	83	3.12	0.98	83	1.5	79	0.102	99	99	0.9	0	407	361	363	371	380	376	723	217	73	58	72	59	73	-0.038	1.96	0.06
318	51.014	50.932	0.16	0.16	1.25	83	3.13	0.98	83	1.5	79	0.102	98	98	0.9	0	406	361	362	370	380	376	722	217	73	58	72	59	73	-0.038	1.94	0.06
319	51.175	51.093	0.16	0.16	1.24	83	3.13	0.98	83	1.5	79	0.101	99	99	0.9	0	405	362	362	370	379	376	721	217	73	58	72	59	73	-0.038	1.92	0.06
320	51.336	51.254	0.16	0.16	1.24	83	3.11	0.98	83	1.5	79	0.099	100	100	0.8	-0.1	404	362	362	369	379	375	720	217	73	58	72	59	73	-0.038	1.92	0.06
321	51.496	51.414	0.16	0.16	1.25	83	3.13	0.98	83	1.5	79	0.101	99	99	0.8	0	403	362	362	369	379	375	718	217	73	58	72	59	73	-0.038	1.93	0.06
322	51.657	51.575	0.16	0.16	1.25	83	3.12	0.98	83	1.5	79	0.099	100	100	0.8	0	403	362	361	368	378	374	717	217	73	58	72	59	73	-0.038	1.92	0.06
323	51.819	51.736	0.16	0.16	1.24	83	3.13	0.98	83	1.5	79	0.103	99	98	0.8	0	402	362	361	368	378	374	716	217	73	58	72	59	73	-0.038	1.92	0.06
324	51.979	51.896	0.16	0.16	1.24	83	3.12	0.98	83	1.5	79	0.101	99	99	0.8	0	401	362	361	368	377	374	715	217	73	58	72	59	73	-0.038	1.92	0.06
325	52.139	52.057	0.16	0.16	1.25	83	3.13	0.98	83	1.5	79	0.093	103	104	0.8	0	400	362	360	367	377	373	714	216	73	58	72	59	73	-0.038	1.91	0.06
326	52.300	52.218	0.16	0.16	1.25	83	3.13	0.98	83	1.5	79	0.098	101	101	0.8	0	400	362	360	367	376	373	713	215	73	58	72	59	73	-0.038	1.92	0.06
327	52.461	52.379	0.16	0.16	1.25	83	3.13	0.98	83	1.5	79	0.101	99	99	0.8	0	399	362	359	366	376	372	712	215	73	58	72	59	73	-0.038	1.94	0.06
328	52.622	52.539	0.16	0.16	1.24	83	3.13	0.98	83	1.5	79	0.103	98	98	0.7	-0.1	398	362	359	366	375	372	711	215	73	58	72	59	73	-0.038	1.93	0.06
329	52.783	52.699	0.16	0.16	1.24	83	3.12	0.98	83	1.5	79	0.099	100	100	0.7	0	398	362	359	365	375	372	710	215	73	58	72	59	73	-0.038	1.94	0.06
330	52.943	52.861	0.16	0.16	1.24	83	3.12	0.98	83	1.5	79	0.100	99	100	0.7	0	397	362	358	365	375	371	709	215	73	58	72	59	73	-0.038	1.94	0.06
331	53.104	53.021	0.16	0.16	1.24	83	3.12	0.98	83	1.5	79	0.102	99	98	0.7	0	397	362	359	364	374	371	709	214	73	58	72	59	73	-0.038	1.93	0.06
332	53.265	53.181	0.16	0.16	1.25	83	3.13	0.98	83	1.5	79	0.099	100	100	0.7	0	396	362	358	364	374	371	708	214	73	58	72	59	73	-0.038	1.94	0.06
333	53.426	53.343	0.16	0.16	1.25	83	3.13	0.98	83	1.5	79	0.099	100	101	0.7	0	396	362	358	363	373	370	707	214	73	58	72	59	73	-0.038	1.95	0.06
334	53.587	53.503	0.16	0.16	1.25	83	3.12	0.98	83	1.5	79	0.100	100	99	0.7	0	395	362	357	363	373	370	707	214	73	58	72	59	73	-0.038	1.96	0.06
335	53.748	53.664	0.16	0.16	1.24	83	3.13	0.99	83	1.5	79	0.091	105	105	0.6	-0.1	395	362	357	362	372	370	706	214	73	58	72	59	73	-0.038	1.92	0.06
336	53.908	53.825	0.16	0.16	1.24	83	3.13	0.98	83	1.5	79	0.102	98	99	0.6	0	395	362	357	362	372	370	706	214	73	58	72	59	73	-0.038	1.92	0.06
337	54.068	53.985	0.16	0.16	1.25	83	3.12	0.98	83	1.5	79	0.101	99	99	0.6	0	394	362	357	361	371	369	705	214	73	58	72	59	73	-0.038	1.91	0.06
338	54.229	54.146	0.16	0.16	1.24	83	3.13	0.98	83	1.5	79	0.100	100	100	0.6	0	394	362	357	361	371	369	704	215	73	58	72	59	73	-0.039	1.91	0.06
339	54.391	54.306	0.16	0.16	1.25	83	3.12	0.98	83	1.5	79	0.099	101	100	0.6	0	393	362	357	361	371	369	703	214	73	58	72	59	73	-0.038	1.91	0.06
340	54.552	54.468	0.16	0.16	1.23	83	3.12	0.98	83	1.5	79	0.100	100	100	0.6	0	393	361	356	360	370	368	702	214	73	58	72	59	73	-0.038	1.89	0.06
341	54.712	54.628	0.16	0.16	1.25	83	3.12	0.98	83	1.5	79	0.100	99	99	0.6	0	392	361	356	360	370	368	701	213	73	58	72	59	73	-0.039	1.88	0.06
342	54.873	54.789	0.16	0.16	1.25	83	3.13	0.98	83	1.5	79	0.101	99	99	0.6	0	391	361	356	359	369	367	699	213	73	58	72	59	73	-0.038	1.85	0.06
343	55.033	54.950	0.16	0.16	1.24	83	3.13	0.98	83	1.5	79	0.101	99	99	0.5	-0.1	390	361	356	359	369	367	698	213	73	58	72	59	73	-0.038	1.86	0.06
344	55.194	55.110	0.16	0.16	1.25	83	3.12	0.98	83	1.5	79	0.102	99	98	0.5	0	390	361	356	358	369	367	696	212	73	58	72	59	73	-0.038	1.85	0.06
345	55.356	55.271	0.16	0.16	1.24	83	3.12	0.98	83	1.5	79	0.091	105	105	0.5	0	389	361	356	358	368	366	694	212	73	58	72	59	73	-0.038	1.79	0.06
346	55.516	55.432	0.16	0.16	1.24	83	3.13	0.98	83	1.5	79	0.103	98	98	0.5	0	388	361	356	357	368	366	692	211	73	58	72	59	73	-0.038	1.81	0.06
347	55.676	55.593	0.16	0.16	1.24	83	3.13	0.98	83	1.5	79	0.104	97	98	0.5	0	387	360	355	356	368	365	690	211	73	58	72	59	73	-0.038	1.81	0.06
348	55.837	55.753	0.16	0.16	1.25	83	3.13	0.98	83	1.5	79	0.101	99	99	0.5	0	386	360	355	356	367	365	688	211	73	58	72	59	73	-0.038	1.81	0.06

Wood Heater Test Data

u

Run: 5

Manufacturer: Kuma Stoves
Model: K-251
Tracking No.: 2464
Project No.: 0123WM014E
Test Date: 02-May-23
Beginning Clock Time: 11:58

Total Sampling Time: 382 min
Recording Interval: 1 min
Tunnel Diameter: 6
Background Sample Volume: 59.605 cubic feet

PM Control Modules: 335,336
Dilution Tunnel MW(dry): 29.00 lb/lb-mole
Dilution Tunnel MW(wet): 28.78 lb/lb-mole
Dilution Tunnel H2O: 2.00 percent
Dilution Tunnel Static: -0.280 "H2O
Tunnel Area: 0.19635 ft2
Pitot Tube Cp: 0.99

Avg. Tunnel Velocity: 18.62 ft/sec.
Initial Tunnel Flow: 212.2 scfm
Average Tunnel Flow: 208.3 scfm
Post-Test Leak Check (1st Hr): 0.000 cfm @ 15 in. Hg
Post-Test Leak Check (1): 0.001 cfm @ 14 in. Hg
Post-Test Leak Check (2): 0.000 cfm @ 10 in. Hg
Average Test Piece Fuel Moisture: 22.56 Dry Basis %

Technician Signature:_____

Meter Box Y Factor: 1.007 (1) 1.015 (2) 1.012 (Amb)

Barometric Pressure:

Begin	Middle	End	Average
29.71		29.80	29.76

Room Air Velocity, fpn
<50

OMNI Equipment Numbers: _____

Velocity Traverse Data

	Pt.1	Pt.2	Pt.3	Pt.4	Pt.5	Pt.6	Pt.7	Pt.8	Center	
Initial dP	0.064	0.098	0.090	0.066	0.052	0.092	0.092	0.082	0.103	"H2O
Temp:	77	77	77	77	77	77	77	77	76	°F

V_{strav} 18.82 ft/sec V_{scent} 21.51 ft/sec F_p 0.875

qwq

	Particulate Sampling Data														Fuel Weight (lb)		Temperature Data (°F)													Stack Gas Data		
Elapsed Time (min)	Gas Meter 1 (ft^3)	Gas Meter 2 (ft^3)	Sample Rate 1 (cfm)	Sample Rate 2 (cfm)	Orifice dH 1 ("H_2O)	Meter 1 Temp (°F)	Meter 1 Vacuum ("Hg)	Orifice dH 2 ("H_2O)	Meter 2 Temp (°F)	Meter 2 Vacuum ("Hg)	Dilution Tunnel (°F)	Dilution Tunnel Center dP	Pro. Rate 1	Pro. Rate 2	Scale Reading	Weight Change	Firebox Top	Firebox Bottom	Firebox Back	Firebox Left	Firebox Right	Avg. Stove Surface (Tot = ΔT)	Catalyst Exit	Stack	Filter 1	Dryer Exit 1	Filter 2	Dryer Exit 2	Ambient	Draft ("H_2O)	CO_2 (%)	CO (%)
349	55.998	55.913	0.16	0.16	1.24	83	3.12	0.98	83	1.5	79	0.099	100	100	0.5	0	385	360	355	355	367	364	686	211	73	58	72	59	73	-0.038	1.85	0.06
350	56.160	56.075	0.16	0.16	1.24	83	3.13	0.98	83	1.5	78	0.102	99	99	0.4	-0.1	385	360	355	355	366	364	685	211	73	58	72	59	73	-0.038	1.89	0.06
351	56.320	56.235	0.16	0.16	1.25	83	3.13	0.98	83	1.5	78	0.100	99	99	0.4	0	384	360	355	354	366	364	684	211	73	58	72	59	72	-0.037	1.91	0.06
352	56.480	56.396	0.16	0.16	1.24	83	3.13	0.98	83	1.5	78	0.093	103	103	0.4	0	384	360	355	353	365	363	684	211	73	58	72	59	73	-0.038	1.93	0.06
353	56.641	56.557	0.16	0.16	1.24	83	3.12	0.98	83	1.5	78	0.100	100	100	0.4	0	384	359	355	352	365	363	684	211	73	58	72	59	73	-0.038	1.89	0.06
354	56.802	56.717	0.16	0.16	1.25	83	3.13	0.98	83	1.5	78	0.103	98	98	0.4	0	383	359	355	351	364	362	684	211	73	58	72	59	73	-0.038	1.88	0.06
355	56.963	56.877	0.16	0.16	1.25	83	3.13	0.98	83	1.5	78	0.103	98	98	0.4	0	383	359	355	351	364	362	683	211	73	58	72	59	73	-0.038	1.87	0.06
356	57.124	57.039	0.16	0.16	1.24	83	3.13	0.98	83	1.5	78	0.103	98	99	0.4	0	382	359	355	350	363	362	682	211	73	58	72	59	73	-0.038	1.87	0.06
357	57.284	57.199	0.16	0.16	1.24	83	3.13	0.98	83	1.5	78	0.103	98	98	0.3	-0.1	382	359	355	349	362	361	681	210	73	58	72	59	73	-0.038	1.86	0.06
358	57.445	57.360	0.16	0.16	1.24	84	3.13	0.98	83	1.5	79	0.102	99	99	0.3	0	381	358	355	349	362	361	680	210	73	58	72	59	73	-0.037	1.87	0.06
359	57.605	57.520	0.16	0.16	1.25	84	3.13	0.98	83	1.5	78	0.103	97	98	0.3	0	381	358	356	348	361	361	679	210	73	58	72	59	73	-0.037	1.85	0.06
360	57.766	57.682	0.16	0.16	1.25	83	3.13	0.98	83	1.5	79	0.102	99	99	0.3	0	380	358	356	347	360	360	679	209	73	58	72	59	73	-0.038	1.85	0.06
361	57.928	57.842	0.16	0.16	1.24	84	3.13	0.98	83	1.5	79	0.101	100	99	0.3	0	380	357	355	346	359	359	677	210	73	58	72	59	73	-0.037	1.85	0.06
362	58.088	58.002	0.16	0.16	1.24	84	3.12	0.99	83	1.5	79	0.102	98	98	0.3	0	379	357	355	345	359	359	677	209	73	58	72	59	73	-0.038	1.83	0.06
363	58.249	58.164	0.16	0.16	1.24	84	3.12	0.98	83	1.5	79	0.101	99	100	0.3	0	379	357	356	345	359	359	675	209	73	58	72	59	73	-0.038	1.83	0.06
364	58.409	58.324	0.16	0.16	1.25	84	3.13	0.98	83	1.5	79	0.099	99	100	0.3	0	378	356	355	344	358	358	674	209	73	58	72	59	73	-0.038	1.84	0.06
365	58.570	58.484	0.16	0.16	1.25	84	3.13	0.98	84	1.5	79	0.094	103	102	0.2	-0.1	377	356	355	343	357	358	673	208	73	58	72	59	73	-0.037	1.83	0.06
366	58.732	58.646	0.16	0.16	1.24	84	3.13	0.98	83	1.5	79	0.100	100	100	0.2	0	377	355	356	342	357	357	672	208	73	58	72	59	73	-0.037	1.85	0.06
367	58.892	58.807	0.16	0.16	1.24	84	3.13	0.98	84	1.5	78	0.101	98	99	0.2	0	376	355	356	342	356	357	672	207	73	58	72	59	73	-0.038	1.87	0.06
368	59.053	58.967	0.16	0.16	1.24	84	3.14	0.98	84	1.5	78	0.103	98	98	0.2	0	376	355	355	341	356	357	672	208	73	58	72	59	73	-0.038	1.85	0.06
369	59.214	59.128	0.16	0.16	1.24	84	3.12	0.98	84	1.5	78	0.100	99	100	0.2	0	375	355	354	340	355	356	671	208	73	58	72	59	73	-0.038	1.85	0.06
370	59.374	59.289	0.16	0.16	1.25	84	3.12	0.98	84	1.5	78	0.101	98	99	0.2	0	375	355	355	339	355	356	671	208	73	58	72	59	73	-0.038	1.84	0.06
371	59.535	59.449	0.16	0.16	1.25	84	3.12	0.98	84	1.5	79	0.099	100	100	0.2	0	375	354	355	339	354	355	671	209	73	58	72	59	73	-0.038	1.85	0.06
372	59.697	59.610	0.16	0.16	1.25	84	3.13	0.98	84	1.5	78	0.102	99	99	0.2	0	374	354	354	338	354	355	670	208	73	58	72	59	73	-0.038	1.83	0.06
373	59.857	59.771	0.16	0.16	1.24	84	3.14	0.98	84	1.5	78	0.098	100	101	0.1	-0.1	374	354	354	337	354	355	670	208	73	58	72	59	73	-0.037	1.79	0.06
374	60.018	59.932	0.16	0.16	1.24	84	3.13	0.98	84	1.5	78	0.099	100	100	0.1	0	373	353	354	337	353	354	669	208	73	58	72	59	73	-0.037	1.78	0.06
375	60.178	60.092	0.16	0.16	1.24	84	3.12	0.98	84	1.5	79	0.100	99	99	0.1	0	373	353	353	336	353	354	667	207	73	58	72	59	73	-0.037	1.77	0.06
376	60.339	60.253	0.16	0.16	1.24	84	3.13	0.98	84	1.5	78	0.100	99	100	0.1	0	372	353	353	335	352	353	666	207	73	58	72	59	73	-0.037	1.75	0.06
377	60.500	60.414	0.16	0.16	1.25	84	3.12	0.98	84	1.5	78	0.100	99	100	0.1	0	371	353	353	335	352	353	665	207	73	58	72	60	73	-0.038	1.69	0.06
378	60.661	60.575	0.16	0.16	1.24	84	3.12	0.98	84	1.5	78	0.100	99	100	0.1	0	370	352	352	334	352	352	663	207	73	58	72	60	73	-0.038	1.69	0.06
379	60.821	60.735	0.16	0.16	1.24	84	3.12	0.98	84	1.5	79	0.100	99	99	0.1	0	369	352	352	333	351	351	661	206	73	58	72	60	73	-0.037	1.69	0.06
380	60.982	60.897	0.16	0.16	1.24	84	3.13	0.98	84	1.5	79	0.103	98	99	0.1	0	369	351	352	333	351	351	659	206	73	58	72	59	73	-0.037	1.68	0.06
381	61.143	61.057	0.16	0.16	1.25	84	3.12	0.98	84	1.5	79	0.099	100	100	0.1	0	368	351	351	332	350	350	657	205	73	58	72	60	73	-0.037	1.66	0.05
382	61.304	61.217	0.16	0.16	1.24	84	3.12	0.98	84	1.5	79	0.100	100	99	0.0	-0.1	367	350	350	331	350	350	656	204	73	58	72	60	73	-0.037	1.65	0.05

Wood Heater Lab Data - ASTM E2780 / ASTM E2515

Manufacturer: Kuma Stoves
Model: K-251
Tracking No.: 2464
Project No.: 0123WM014E
Run #: 5
Date: 5/2/23

Equipment Numbers:

TRAIN 1 (First Hour emissions)

Sample Component	Reagent	Filter, Probe or Dish #	Weights		
			Final, mg	Tare, mg	Particulate, mg
B. Front filter catch	Filter	E904	124.3	117.5	6.8
C. Rear filter catch	Filter	E905	117.9	117.7	0.2
D. Probe catch*	Probe	18	114399.9	114398.7	1.2
E. Filter seals catch*	Seals	S481	3425.4	3425.4	0.0

Sub-Total Total Particulate, mg: 8.2

TRAIN 1 (Post First Hour Change-out)

Sample Component	Reagent	Filter, Probe or Dish #	Weights		
			Final, mg	Tare, mg	Particulate, mg
B. Front filter catch	Filter	E906	131.6	117.4	14.2
C. Rear filter catch	Filter	E907	117.3	116.2	1.1
D. Probe catch*	Probe	60	112127.5	112126.5	1.0
E. Filter seals catch*	Seals	S482	3353.8	3353.4	0.4

Sub-Total Total Particulate, mg: 16.7

Train 1 Aggregate Total Particulate, mg: **24.9**

TRAIN 2

Sample Component	Reagent	Filter, Probe or Dish #	Weights		
			Final, mg	Tare, mg	Particulate, mg
A. Front filter catch	Filter	E908	138.6	117.6	21.0
B. Rear filter catch	Filter	E909	117.9	116.7	1.2
C. Probe catch*	Probe	38	114150.0	114148.9	1.1
D. Filter seals catch*	Seals	S483	3394.9	3394.7	0.2

Total Particulate, mg: **23.5**

AMBIENT

Sample Component	Reagent	Filter # or Probe #	Weights		
			Final, mg	Tare, mg	Particulate, mg
A. Front filter catch*	Filter	E910	117.7	117.7	0.0

Total Particulate, mg: **0.0**

*Particulate catch that results in a negative number, is assumed to be zero for probes and seals, negative numbers for filters are assumed to be part of the seal weight.

Component	Equations:
A. Front filter catch	Final (mg) - Tare (mg) = Particulate, mg
B. Rear filter catch	Final (mg) - Tare (mg) = Particulate, mg
C. Probe catch	Final (mg) - Tare (mg) = Particulate, mg

Technician Signature:_____

Wood Heater Test Results - ASTM E2780 / ASTM E2515

Manufacturer: Kuma Stoves
Model: K-251
Project No.: 0123WM014E
Tracking No.: 2464
Run: 5
Test Date: 05/02/23

Technician Signature:_____

Burn Rate	**1.09**	**kg/hr dry**
Average Tunnel Temperature	82	degrees Fahrenheit
Average Gas Velocity in Dilution Tunnel - vs	18.62	feet/second
Average Gas Flow Rate in Dilution Tunnel - Qsd	12499.5	dscf/hour
Average Delta p	0.100	inches H20
Total Time of Test	382	minutes

	AMBIENT		SAMPLE TRAIN 1		SAMPLE TRAIN 2		FIRST HOUR FILTER (TRAIN 1)	
Total Sample Volume - Vm	59.605	cubic feet	61.304	cubic feet	61.217	cubic feet	9.576	cubic feet
Average Gas Meter Temperature	72	degrees Fahrenheit	81	degrees Fahrenheit	81	degrees Fahrenheit	75	degrees Fahrenheit
Total Sample Volume (Standard Conditions) - Vmstd	59.549	dscf	60.073	dscf	60.424	dscf	9.492	dscf
Total Particulates - m_n	0	mg	24.9	mg	23.5	mg	8.2	mg
Particulate Concentration (dry-standard) - C_r/C_s	0.000000	grams/dscf	0.00041	grams/dscf	0.00039	grams/dscf	0.00086	grams/dscf
Total Particulate Emissions - E_T	0.00	grams	32.99	grams	30.95	grams	10.80	grams
Particulate Emission Rate	0.00	grams/hour	5.18	grams/hour	4.86	grams/hour	10.80	grams/hour
Emissions Factor			4.77	g/kg	4.47	g/kg	7.12	g/kg
Difference from Average Total Particulate Emissions			1.02	grams	1.02	grams		

Final Average Results		
Complete Test Run		
Total Particulate Emissions - E_T	31.97	grams
Particulate Emission Rate	**5.02**	**grams/hour**
Emissions Factor	4.62	grams/kg
First Hour Emissions		
Total Particulate Emissions - E_T	10.80	grams
Particulate Emission Rate	10.80	grams/hour
Emissions Factor	7.12	grams/kg
7.5% of Average Total Particulate Emissions	2.40	grams

Quality Checks	Requirement	Measured / Observed: First Hour	Train 1	Train 2	Complies?
Filter Temps, °F	< 90	71	73	72	OK
Filter Face Velocity, fpm	< 30	8.62	8.68	8.68	OK
Dryer Exit Temp, °F	< 80	54	58	60	OK
Leakage Rate, cfm < 4% of avg sample rate or < 0.01 cfm, lesser of the two	0.01	0.000	0.001	0.000	OK
Neg. Probe Weight	=> 0	1.2	1	1.1	OK
Pro-Rate Variation	< 90 for < 10% of θ	0.00%	0.00%	0.00%	OK
	> 110 for < 10% of θ	0.00%	0.00%	0.00%	OK
	# Readings < 80%	0	0	0	OK
	# Readings > 120%	0	0	0	OK
Ambient Temp, °F (min / max)	< 55	69			OK
	> 90	73			OK
Train Precision	(*A*) Within 7.5%	3.2%			OK
One of *A* or *B* must	(*B*) Within 0.5 g/kg	0.29			
Stove Surface ΔT	Within 125 °F	25			OK
Room Air Velocity	< 50 fpm	<50			OK

Wood Heater Lab Data - ASTM E2780 / ASTM E2515

Manufacturer:	Kuma Stoves	Equipment Numbers:	
Model:	K-251		
Tracking No.:	2464		
Project No.:	0123WM014E		
Run #:	5		
Date:	5/2/23		

Uncorrected

TRAIN 1 (First Hour emissions)

Sample Component	Reagent	Filter, Probe or Dish #	Weights		
			Final, mg	Tare, mg	Particulate, mg
B. Front filter catch	Filter	E904	124.3	117.5	6.8
C. Rear filter catch	Filter	E905	117.9	117.7	0.2
D. Probe catch*	Probe	18	114399.9	114398.7	1.2
E. Filter seals catch*	Seals	S481	3425.4	3425.4	0.0

Sub-Total	Total Particulate, mg:	8.2

TRAIN 1 (Post First Hour Change-out)

Sample Component	Reagent	Filter, Probe or Dish #	Weights		
			Final, mg	Tare, mg	Particulate, mg
B. Front filter catch	Filter	E906	131.6	117.4	14.2
C. Rear filter catch	Filter	E907	117.3	116.2	1.1
D. Probe catch*	Probe	60	112127.5	112126.5	1.0
E. Filter seals catch*	Seals	S482	3353.8	3353.4	0.4

Sub-Total	Total Particulate, mg:	16.7
Train 1 Aggregate	Total Particulate, mg:	**24.9**

TRAIN 2

Sample Component	Reagent	Filter, Probe or Dish #	Weights		
			Final, mg	Tare, mg	Particulate, mg
A. Front filter catch	Filter	E908	138.6	117.6	21.0
B. Rear filter catch	Filter	E909	117.9	116.7	1.2
C. Probe catch*	Probe	38	114150.0	114148.9	1.1
D. Filter seals catch*	Seals	S483	3394.9	3394.7	0.2

Total Particulate, mg:	**23.5**

AMBIENT

Sample Component	Reagent	Filter # or Probe #	Weights		
			Final, mg	Tare, mg	Particulate, mg
A. Front filter catch*	Filter	E910	117.7	117.7	0.0

Total Particulate, mg:	**0.0**

*Particulate catch that results in a negative number, is assumed to be zero for probes and seals, negative numbers for filters are assumed to be part of the seal weight.

Component	Equations:
A. Front filter catch	Final (mg) - Tare (mg) = Particulate, mg
B. Rear filter catch	Final (mg) - Tare (mg) = Particulate, mg
C. Probe catch	Final (mg) - Tare (mg) = Particulate, mg

Technician Signature:_____

Wood Heater Test Results - ASTM E2780 / ASTM E2515

Manufacturer: Kuma Stoves
Model: K-251
Project No.: 0123WM014E
Tracking No.: 2464
Run: 5
Test Date: 05/02/23

Technician Signature:_____

Burn Rate	**1.09**	**kg/hr dry**
Average Tunnel Temperature	82	degrees Fahrenheit
Average Gas Velocity in Dilution Tunnel - vs	18.62	feet/second
Average Gas Flow Rate in Dilution Tunnel - Qsd	12499.5	dscf/hour
Average Delta p	0.100	inches H20
Total Time of Test	382	minutes

Uncorrected

	AMBIENT		SAMPLE TRAIN 1		SAMPLE TRAIN 2		FIRST HOUR FILTER (TRAIN 1)	
Total Sample Volume - Vm	59.605	cubic feet	61.304	cubic feet	61.217	cubic feet	9.576	cubic feet
Average Gas Meter Temperature	72	degrees Fahrenheit	81	degrees Fahrenheit	81	degrees Fahrenheit	75	degrees Fahrenheit
Total Sample Volume (Standard Conditions) - Vmstd	59.549	dscf	60.073	dscf	60.424	dscf	9.492	dscf
Total Particulates - m_n	0	mg	24.9	mg	23.5	mg	8.2	mg
Particulate Concentration (dry-standard) - C_r/C_s	0.000000	grams/dscf	0.00041	grams/dscf	0.00039	grams/dscf	0.00086	grams/dscf
Total Particulate Emissions - E_T	0.00	grams	32.99	grams	30.95	grams	10.80	grams
Particulate Emission Rate	0.00	grams/hour	5.18	grams/hour	4.86	grams/hour	10.80	grams/hour
Emissions Factor			4.77	g/kg	4.47	g/kg	7.12	g/kg
Difference from Average Total Particulate Emissions			1.02	grams	1.02	grams		

Final Average Results		
Complete Test Run		
Total Particulate Emissions - E_T	31.97	grams
Particulate Emission Rate	**5.02**	**grams/hour**
Emissions Factor	4.62	grams/kg
First Hour Emissions		
Total Particulate Emissions - E_T	10.80	grams
Particulate Emission Rate	10.80	grams/hour
Emissions Factor	7.12	grams/kg
7.5% of Average Total Particulate Emissions	2.40	grams

Quality Checks	Requirement	Measured / Observed: First Hour	Train 1	Train 2	Complies?
Filter Temps, °F	< 90	71	73	72	OK
Filter Face Velocity, fpm	< 30	8.62	8.68	8.68	OK
Dryer Exit Temp, °F	< 80	54	58	60	OK
Leakage Rate, cfm < 4% of avg sample rate or < 0.01 cfm, lesser of the two	0.01	0.000	0.001	0.000	OK
Neg. Probe Weight	=> 0	1.2	1	1.1	OK
Pro-Rate Variation	< 90 for < 10% of θ	0.00%	0.00%	0.00%	OK
	> 110 for < 10% of θ	0.00%	0.00%	0.00%	OK
	# Readings < 80%	0	0	0	OK
	# Readings > 120%	0	0	0	OK
Ambient Temp, °F (min / max)	< 55	69			OK
	> 90	73			OK
Train Precision One of *A* or *B* must	(*A*) Within 7.5%	3.2%			OK
	(*B*) Within 0.5 g/kg	0.29			
Stove Surface ΔT	Within 125 °F	25			OK
Room Air Velocity	< 50 fpm	<50			OK

VERSION:	2.4	4/15/2010			
Manufacturer:	Kuma Stoves		Appliance Type:	Cat	(Cat, Non-Cat, Pellet)
Model:	K-251				
Date:	5/2/2023		Temp. Units	F	(F or C)
Run:	5		Weight Units	lb	(kg or lb)
Control #:	2464				
Test Duration:	382				
Output Category:	II		Fuel Data		
				D. Fir	
Wood Moisture (% wet):	18.40		HHV	19,810	kJ/kg
Load Weight (lb wet):	18.70		%C	48.73	
Burn Rate (dry kg/h):	1.09		%H	6.87	
Total Particulate Emissions:	31.97	g	%O	43.9	
			%Ash	0.5	

Default Fuel Values

	D. Fir	Oak
HHV (kJ/kg)	19,810	19,887
%C	48.73	50
%H	6.87	6.6
%O	43.9	42.9
%Ash	0.5	0.5

Note 1: For other fuels, use the heating value and fuel composition determined by analysis of fuel sample in accordance with Clause 9.2.

Note 2: In cases where the "Fuel Weight Remaining" is the same for three or more readings in a row, a "divide by zero error" will occur in the calculation sheet. In such cases, adjust the weight values by interpolation between the first occurence and the next reading showing a decrease in weight.

	Averages	0.09	2.46	#DIV/0!	271.91	71.68
					Temp. (ºF)	
Elapsed Time (min)	Fuel Weight Remaining (lb)	Flue Gas Composition (%) CO	CO_2	O_2	Flue Gas	Room Temp
0	18.70	0.18	3.57		425.0	69.0
1	18.70	0.06	1.04		450.0	69.0
2	18.60	0.33	2.09		345.0	69.0
3	18.50	0.13	2.04		340.0	70.0
4	18.40	0.06	2.14		317.0	70.0
5	18.30	0.03	2.01		307.0	70.0
6	18.30	0.03	1.76		300.0	70.0
7	18.20	0.03	1.71		295.0	69.0
8	18.10	0.02	1.65		291.0	70.0
9	18.10	0.03	1.70		287.0	70.0
10	18.00	0.03	1.64		284.0	70.0
11	18.00	0.02	1.71		281.0	69.0
12	17.90	0.03	1.80		279.0	69.0
13	17.90	0.03	1.95		281.0	69.0
14	17.80	0.04	2.27		280.0	69.0
15	17.70	0.05	1.86		280.0	69.0
16	17.70	0.06	1.96		276.0	69.0
17	17.60	0.08	1.84		272.0	69.0
18	17.50	0.10	1.81		269.0	69.0

19	17.50	0.11	1.81		266.0	69.0
20	17.40	0.12	1.84		264.0	69.0
21	17.30	0.14	1.77		262.0	69.0
22	17.20	0.15	1.72		260.0	69.0
23	17.20	0.15	1.72		259.0	69.0
24	17.10	0.16	1.71		257.0	69.0
25	17.00	0.17	1.70		256.0	69.0
26	17.00	0.18	1.71		255.0	69.0
27	16.90	0.18	1.70		255.0	69.0
28	16.90	0.18	1.70		254.0	69.0
29	16.80	0.19	1.70		253.0	69.0
30	16.70	0.19	1.74		252.0	69.0
31	16.60	0.19	1.75		251.0	69.0
32	16.60	0.19	1.76		250.0	69.0
33	16.50	0.19	1.79		249.0	69.0
34	16.40	0.19	1.82		249.0	69.0
35	16.40	0.19	1.82		248.0	69.0
36	16.30	0.17	1.90		250.0	69.0
37	16.20	0.13	2.41		251.0	69.0
38	16.10	0.13	2.18		252.0	69.0
39	16.10	0.13	2.08		255.0	69.0
40	16.00	0.12	2.32		257.0	69.0
41	15.90	0.10	2.30		260.0	69.0
42	15.80	0.08	2.20		262.0	69.0
43	15.80	0.07	2.18		264.0	69.0
44	15.70	0.06	2.15		266.0	69.0
45	15.60	0.06	2.20		267.0	69.0
46	15.60	0.06	2.18		267.0	69.0
47	15.50	0.06	2.18		268.0	69.0
48	15.40	0.06	2.14		269.0	69.0
49	15.40	0.06	2.15		269	69
50	15.30	0.06	2.14		269	69
51	15.20	0.06	2.18		269	69
52	15.10	0.06	2.22		270	69
53	15.10	0.07	2.25		271	69
54	15.00	0.07	2.3		271	69
55	14.90	0.07	2.34		273	69
56	14.90	0.07	2.4		275	69
57	14.80	0.07	2.41		277	69

58	14.70	0.07	2.44		277	69
59	14.60	0.08	2.47		280	69
60	14.60	0.07	2.46		281	69
61	14.50	0.07	2.49		282	69
62	14.40	0.07	2.51		283	69
63	14.30	0.08	2.55		284	69
64	14.30	0.08	2.6		286	69
65	14.20	0.08	2.66		287	69
66	14.10	0.08	2.66		288	69
67	14.00	0.08	2.7		289	69
68	14.00	0.08	2.75		291	69
69	13.90	0.08	2.77		294	69
70	13.80	0.08	2.82		295	69
71	13.70	0.09	2.84		297	69
72	13.60	0.09	2.88		300	69
73	13.50	0.09	2.99		302	70
74	13.40	0.11	3.2		306	70
75	13.40	0.11	3.22		310	69
76	13.30	0.11	3.21		312	69
77	13.20	0.11	3.19		315	69
78	13.20	0.11	3.17		317	70
79	13.10	0.11	3.18		320	70
80	13.00	0.11	3.22		321	70
81	12.90	0.11	3.23		323	70
82	12.80	0.11	3.25		323	70
83	12.80	0.11	3.27		325	70
84	12.60	0.11	3.29		326	70
85	12.50	0.11	3.28		327	70
86	12.50	0.11	3.22		329	70
87	12.40	0.11	3.22		329	70
88	12.30	0.11	3.14		329	70
89	12.20	0.11	3.14		328	70
90	12.10	0.11	3.16		329	70
91	12.00	0.11	3.16		330	70
92	11.90	0.11	3.19		330	70
93	11.80	0.11	3.2		331	70
94	11.70	0.11	3.22		332	70
95	11.60	0.1	3.19		331	70
96	11.60	0.11	3.24		331	70

97	11.50	0.11	3.26		333	70
98	11.40	0.11	3.26		333	70
99	11.30	0.1	3.27		333	70
100	11.20	0.1	3.26		333	70
101	11.10	0.11	3.32		334	70
102	11.00	0.11	3.35		334	70
103	11.00	0.11	3.4		336	70
104	10.90	0.11	3.46		336	70
105	10.80	0.11	3.47		337	70
106	10.70	0.12	3.53		337	70
107	10.60	0.12	3.57		339	71
108	10.50	0.12	3.65		341	71
109	10.40	0.13	3.69		342	70
110	10.30	0.13	3.74		343	71
111	10.20	0.14	3.76		343	71
112	10.10	0.14	3.7		344	71
113	10.00	0.15	3.7		345	71
114	10.00	0.14	3.69		344	71
115	9.90	0.14	3.69		345	71
116	9.80	0.13	3.66		346	71
117	9.70	0.13	3.64		346	71
118	9.60	0.12	3.62		345	71
119	9.50	0.12	3.59		345	71
120	9.40	0.12	3.59		346	71
121	9.30	0.12	3.62		346	71
122	9.20	0.12	3.65		346	71
123	9.10	0.12	3.65		345	71
124	9.00	0.12	3.64		345	71
125	8.90	0.12	3.64		346	71
126	8.80	0.13	3.71		348	71
127	8.70	0.13	3.77		347	71
128	8.60	0.14	3.77		348	71
129	8.50	0.17	3.77		348	71
130	8.40	0.18	3.79		349	71
131	8.30	0.21	3.79		349	71
132	8.20	0.25	3.86		351	71
133	8.10	0.23	3.83		350	71
134	8.00	0.2	3.77		350	72
135	7.90	0.17	3.77		349	72

136	7.80	0.18	3.73		348	72
137	7.70	0.18	3.71		348	72
138	7.60	0.18	3.71		347	72
139	7.50	0.18	3.69		347	72
140	7.40	0.19	3.73		348	72
141	7.30	0.19	3.69		347	72
142	7.20	0.19	3.72		348	72
143	7.20	0.17	3.65		347	72
144	7.00	0.18	3.67		347	72
145	6.90	0.16	3.59		346	72
146	6.80	0.13	3.5		345	72
147	6.70	0.12	3.4		343	72
148	6.70	0.12	3.36		341	72
149	6.50	0.11	3.28		340	72
150	6.50	0.11	3.21		339	72
151	6.40	0.11	3.2		338	72
152	6.30	0.1	3.1		337	72
153	6.20	0.1	3.03		334	72
154	6.20	0.1	3.01		332	72
155	6.10	0.1	2.96		329	72
156	6.00	0.1	2.95		327	72
157	5.90	0.09	2.9		326	72
158	5.80	0.09	2.91		325	72
159	5.80	0.09	2.89		323	72
160	5.70	0.09	2.9		321	72
161	5.60	0.09	2.9		319	72
162	5.50	0.09	2.91		318	72
163	5.50	0.09	2.92		317	72
164	5.40	0.09	2.92		315	72
165	5.40	0.09	2.96		315	72
166	5.30	0.09	2.92		314	72
167	5.30	0.09	2.88		312	72
168	5.30	0.09	2.9		312	72
169	5.20	0.09	2.91		311	72
170	5.20	0.09	2.89		309	72
171	5.10	0.09	2.88		309	72
172	5.10	0.09	2.84		308	72
173	5.00	0.09	2.81		306	72
174	4.90	0.09	2.78		305	72

175	4.90	0.09	2.74		303	72
176	4.80	0.08	2.69		302	72
177	4.80	0.08	2.66		301	73
178	4.70	0.08	2.68		298	73
179	4.70	0.08	2.63		297	72
180	4.60	0.08	2.62		295	72
181	4.60	0.08	2.6		294	73
182	4.50	0.08	2.57		291	73
183	4.50	0.08	2.58		290	72
184	4.40	0.08	2.58		289	73
185	4.40	0.08	2.56		287	73
186	4.40	0.08	2.55		286	72
187	4.30	0.08	2.55		285	72
188	4.30	0.08	2.59		285	72
189	4.20	0.08	2.62		283	72
190	4.20	0.08	2.6		282	73
191	4.10	0.08	2.59		282	72
192	4.10	0.08	2.59		281	72
193	4.10	0.08	2.63		280	73
194	4.00	0.08	2.61		280	72
195	4.00	0.08	2.62		279	72
196	3.90	0.08	2.6		278	72
197	3.90	0.08	2.54		277	73
198	3.80	0.08	2.54		276	73
199	3.80	0.08	2.51		275	72
200	3.80	0.08	2.48		275	73
201	3.70	0.08	2.49		274	73
202	3.70	0.08	2.46		272	73
203	3.60	0.08	2.46		272	73
204	3.60	0.08	2.48		272	72
205	3.60	0.08	2.48		270	73
206	3.50	0.08	2.48		270	73
207	3.50	0.08	2.49		270	73
208	3.50	0.08	2.51		270	73
209	3.40	0.08	2.55		270	73
210	3.40	0.08	2.59		271	73
211	3.30	0.08	2.64		271	73
212	3.30	0.08	2.63		271	73
213	3.30	0.08	2.55		272	73

214	3.20	0.08	2.5		270	72
215	3.20	0.08	2.51		270	72
216	3.10	0.08	2.46		270	73
217	3.10	0.08	2.44		270	73
218	3.10	0.07	2.39		269	73
219	3.00	0.07	2.38		268	73
220	3.00	0.07	2.37		267	73
221	3.00	0.07	2.36		266	73
222	2.90	0.07	2.35		265	73
223	2.90	0.07	2.32		264	73
224	2.90	0.07	2.3		263	73
225	2.90	0.07	2.27		263	73
226	2.80	0.07	2.24		261	73
227	2.80	0.07	2.25		260	73
228	2.80	0.07	2.24		259	73
229	2.70	0.07	2.23		257	73
230	2.70	0.07	2.21		257	73
231	2.70	0.07	2.23		256	73
232	2.70	0.07	2.24		255	73
233	2.60	0.07	2.22		254	73
234	2.60	0.07	2.23		254	73
235	2.60	0.07	2.24		253	73
236	2.50	0.07	2.27		252	73
237	2.50	0.07	2.28		253	73
238	2.50	0.07	2.29		252	73
239	2.50	0.07	2.29		251	73
240	2.40	0.07	2.31		252	73
241	2.40	0.08	2.37		251	73
242	2.40	0.08	2.38		251	73
243	2.30	0.08	2.36		251	73
244	2.30	0.08	2.38		251	73
245	2.30	0.08	2.41		251	73
246	2.20	0.08	2.44		251	73
247	2.20	0.08	2.42		251	73
248	2.20	0.08	2.42		251	72
249	2.20	0.08	2.38		252	73
250	2.10	0.08	2.4		252	73
251	2.10	0.08	2.4		252	73
252	2.10	0.08	2.38		251	73

253	2.00	0.08	2.39		252	73
254	2.00	0.08	2.37		252	73
255	2.00	0.08	2.35		251	73
256	1.90	0.08	2.33		251	73
257	1.90	0.08	2.34		251	73
258	1.90	0.07	2.31		250	73
259	1.80	0.07	2.27		250	73
260	1.80	0.07	2.27		250	73
261	1.80	0.07	2.25		249	73
262	1.80	0.07	2.22		247	73
263	1.80	0.07	2.18		247	73
264	1.70	0.07	2.16		246	73
265	1.70	0.07	2.15		244	73
266	1.70	0.07	2.13		244	73
267	1.70	0.07	2.11		243	73
268	1.70	0.07	2.09		242	73
269	1.60	0.07	2.07		240	73
270	1.60	0.07	2.07		239	73
271	1.60	0.07	2.07		238	73
272	1.60	0.06	2.06		238	73
273	1.60	0.06	2.05		236	73
274	1.50	0.07	2.07		236	73
275	1.50	0.06	2.07		236	73
276	1.50	0.06	2.05		234	73
277	1.50	0.06	2.04		234	73
278	1.50	0.06	2.02		233	73
279	1.50	0.06	2.03		232	73
280	1.50	0.06	2.01		231	73
281	1.40	0.06	2.01		230	73
282	1.40	0.06	1.99		230	73
283	1.40	0.06	1.98		229	72
284	1.40	0.06	1.98		230	73
285	1.40	0.06	2		229	73
286	1.40	0.06	2.02		228	73
287	1.30	0.06	2.01		227	73
288	1.30	0.06	2.01		227	73
289	1.30	0.06	2.02		227	73
290	1.30	0.06	2.01		226	73
291	1.30	0.06	2.02		227	73

292	1.30	0.06	2.03		226	73
293	1.20	0.06	2.01		225	73
294	1.20	0.06	2.02		225	73
295	1.20	0.06	2		224	73
296	1.20	0.06	2.03		224	73
297	1.20	0.06	2		224	73
298	1.20	0.06	1.99		223	73
299	1.10	0.06	2		223	73
300	1.10	0.06	1.99		223	73
301	1.10	0.06	1.99		222	73
302	1.10	0.06	2		222	73
303	1.10	0.06	1.98		222	73
304	1.10	0.06	1.96		222	73
305	1.10	0.06	1.98		222	73
306	1.00	0.06	1.97		221	73
307	1.00	0.06	1.98		221	73
308	1.00	0.06	1.96		219	73
309	1.00	0.06	1.94		220	73
310	1.00	0.06	1.95		219	73
311	1.00	0.06	1.94		219	73
312	1.00	0.06	1.94		219	73
313	0.90	0.06	1.94		218	73
314	0.90	0.06	1.95		218	73
315	0.90	0.06	1.96		218	73
316	0.90	0.06	1.96		218	73
317	0.90	0.06	1.96		217	73
318	0.90	0.06	1.94		217	73
319	0.90	0.06	1.92		217	73
320	0.80	0.06	1.92		217	73
321	0.80	0.06	1.93		217	73
322	0.80	0.06	1.92		217	73
323	0.80	0.06	1.92		217	73
324	0.80	0.06	1.92		217	73
325	0.80	0.06	1.91		216	73
326	0.80	0.06	1.92		215	73
327	0.80	0.06	1.94		215	73
328	0.70	0.06	1.93		215	73
329	0.70	0.06	1.94		215	73
330	0.70	0.06	1.94		215	73

331	0.70	0.06	1.93		214	73
332	0.70	0.06	1.94		214	73
333	0.70	0.06	1.95		214	73
334	0.70	0.06	1.96		214	73
335	0.60	0.06	1.92		214	73
336	0.60	0.06	1.92		214	73
337	0.60	0.06	1.91		214	73
338	0.60	0.06	1.91		215	73
339	0.60	0.06	1.91		214	73
340	0.60	0.06	1.89		214	73
341	0.60	0.06	1.88		213	73
342	0.60	0.06	1.85		213	73
343	0.50	0.06	1.86		213	73
344	0.50	0.06	1.85		212	73
345	0.50	0.06	1.79		212	73
346	0.50	0.06	1.81		211	73
347	0.50	0.06	1.81		211	73
348	0.50	0.06	1.81		211	73
349	0.50	0.06	1.85		211	73
350	0.40	0.06	1.89		211	73
351	0.40	0.06	1.91		211	72
352	0.40	0.06	1.93		211	73
353	0.40	0.06	1.89		211	73
354	0.40	0.06	1.88		211	73
355	0.40	0.06	1.87		211	73
356	0.40	0.06	1.87		211	73
357	0.30	0.06	1.86		210	73
358	0.30	0.06	1.87		210	73
359	0.30	0.06	1.85		210	73
360	0.30	0.06	1.85		209	73
361	0.30	0.06	1.85		210	73
362	0.30	0.06	1.83		209	73
363	0.30	0.06	1.83		209	73
364	0.30	0.06	1.84		209	73
365	0.20	0.06	1.83		208	73
366	0.20	0.06	1.85		208	73
367	0.20	0.06	1.87		207	73
368	0.20	0.06	1.85		208	73
369	0.20	0.06	1.85		208	73

370	0.20	0.06	1.84		208	73
371	0.20	0.06	1.85		209	73
372	0.20	0.06	1.83		208	73
373	0.10	0.06	1.79		208	73
374	0.10	0.06	1.78		208	73
375	0.10	0.06	1.77		207	73
376	0.10	0.06	1.75		207	73
377	0.10	0.06	1.69		207	73
378	0.10	0.06	1.69		207	73
379	0.10	0.06	1.69		206	73
380	0.10	0.06	1.68		206	73
381	0.10	0.05	1.66		205	73
382	0.00	0.05	1.65		204	73

OMNI-Test Laboratories, Inc.

Manufacturer:	Kuma Stoves
Model:	K-251
Date:	05/02/23
Run:	5
Control #:	2464
Test Duration:	382
Output Category:	II

Technicians: _____

_____

_____

Test Results in Accordance with CSA B415.1-10

	HHV Basis	LHV Basis
Overall Efficiency	59.8%	64.7%
Combustion Efficiency	98.8%	98.8%
Heat Transfer Efficiency	61%	65.4%

Output Rate (kJ/h)	12,887	12,225	**(Btu/h)**
Burn Rate (kg/h)	1.09	2.40	**(lb/h)**
Input (kJ/h)	21,542	20,435	**(Btu/h)**

Test Load Weight (dry kg)	6.92	15.26	**dry lb**
MC wet (%)	18.4		
MC dry (%)	22.55		
Particulate (g)	31.97		
CO (g)	298		
Test Duration (h)	6.37		

Emissions	**Particulate**	**CO**
g/MJ Output	0.39	3.63
g/kg Dry Fuel	4.62	43.01
g/h	5.02	46.77
lb/MM Btu Output	0.91	8.44

Air/Fuel Ratio (A/F)	35.58

VERSION: **2.4** **4/15/2010**

OMNI-Test Laboratories, Inc.

ASTM E2780 Wood Heater Run Sheets

Client: Kuma Project Number: 0123WM014E Run Number: 5
Model: K-251 Tracking Number: 2464 Date: 05/02/2023
Test Crew: Tony Tong
OMNI Equipment ID numbers: 00637, 00709, 00283A

ASTM E2515 Lab Sheet

Assembled By: Tony Tong

Date/Time in Dessicator: 05/03/23, 8:00

	Weighing #1	Weighing #2	Weighing #3	Weighing #4	Weighing #5
Date/Time:	05/04/23 8:00	05/08/23 8:10	05/09/23 15:30	05/10/23 7:45	
R/H %:	24.7	9.7	16.9	19.8	
Temp:	71.2	69.0	71.4	70.7	
200 mg Audit:	200.1	200.1	200.0	200.0	
2 g Audit:	2000.3	2000.3	2000.2	2000.3	
100 g Audit:	99997.8	99997.8	99998.0	99997.9	
Initials:	TT	TT	TT	TT	

Train	Element	ID #	Tare (mg)	Weight (mg)	Weight (mg)	Weight (mg)	Weight (mg)	Weight (mg)
A (First Hour)	Front Filter	E904	117.5	124.5	124.2	124.3		
	Rear Filter	E905	117.7	117.9	117.9			
	Probe	18	114398.7	114399.9	114399.9			
	O-Ring Set	S481	3425.4	3426.0	3425.2	3425.4		
A (Remainder)	Front Filter	E906	117.4	132.1	131.6	131.6		
	Rear Filter	E907	116.2	117.7	117.3	117.3		
	Probe	60	112126.5	112127.6	112127.5			
	O-Ring Set	S482	3353.4	3354.7	3353.8	3353.8		
B	Front Filter	E908	117.6	139.8	139.0	138.6	138.6	
	Rear Filter	E909	116.7	117.8	117.9			
	Probe	38 61	114148.9	114150.0	114150.0			
	O-Ring Set	S483	3394.7	3395.8	3394.9	3394.9		
BG	Filter	E910	117.7	117.7	117.7			

Technician Signature: Tony Tong Date: 05/10/23

6.9.1

OMNI-Test Laboratories, Inc. **ASTM E2780 Wood Heater Run Sheets**

Client: Kuma Project Number: 0123WM014E Run Number: 5
Model: K-251 Tracking Number: 2464 Date: 05/02/2023
Test Crew: Tony Tong, Riley Tiegs
OMNI Equipment ID numbers: 00335, 00336, 00594, 00185, 00322

Wood Heater Run Notes

Air Control Settings

Primary:

Fully closed

Secondary: Fixed

Tertiary/Pilot: N/A

Fan: Fan was off for first 30 minutes then turned to low for the remainder of test.

Preburn Notes

Time	Notes
10:08	Started to record Preburn data @ 9.2 lbs with low burn setting.
11:57	Preburn stopped at 3.9 lbs of coal bed.

Test Notes

Sketch test fuel configuration:

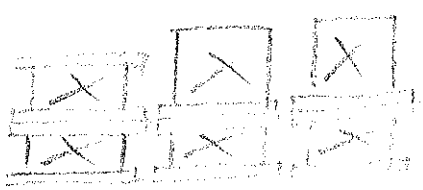

Start up procedures & Timeline:

Bypass: Used for fuel loading
Fuel loaded by: 60 sec.
Door closed at: 70 sec.
Primary air: low burn setting fully closed
Notes:

Time	Notes
11:58	Test started at 3.9 lbs coal.
1 min 10 sec	Door Closed
12:28	Turned fan on and set it on low.
12:58	First hour filters change

Technician Signature: Tony Tong Date: 05/02/23

OMNI-Test Laboratories, Inc.

ASTM E2780 Wood Heater Run Sheets

Client: Kuma Project Number: 0123WM014E Run Number: 5
Model: K-251 Tracking Number: 2464 Date: 05/02/2023
Test Crew: Tony Tong
OMNI Equipment ID numbers: 00594, 00410, 00716, 00721, 00255

Wood Heater Supplemental Data

Start Time: 11:57 Booth #: E 1
Stop Time: 18:19

Stack Gas Leak Check:
Initial: good Final: good

Sample Train Leak Check:
A: .001 @ 15.8 "Hg
B: Ø @ 9.8 "Hg
1st hr Ø @ 14.5

Calibrations: Span Gas CO_2: 16.84 % CO: 4.38 % CO: 500 ppm

	Pre Test		Post Test	
	Zero	Span	Zero	Span
Time	9:21	9:23	18:25	18:28
CO_2 %	0.00	16.84	0.00	16.88
CO %	0.00	4.40	~7 ppm	4.374
CO ppm	0.0	493	~0.004	

Air Velocity (ft/min): Initial: <50 Final: <50
Scale Audit (lbs): Initial: 10 Final: 10.0
Pitot Tube Leak Test: Initial: good Final: good
Stack Diameter (in): 6.0
Induced Draft: 0.000
% Smoke Capture: 100
Flue Pipe Cleaned Prior to First Test in Series:
Date: 04/04/23 Initials: TT

	Initial	Middle	Ending
P_b (in/Hg)	29.71		29.8
RH (%)	47		45
Ambient (°F)	69		73

Tunnel Traverse

Microtector Reading	dP (in H_2O)	T(°F)
1	0.064	77
2	0.098	77
3	0.090	77
4	0.066	77
5	0.052	77
6	0.092	77
7	0.092	77
8	0.082	77
Center:		
	0.103	76

Background Filter Volume: 59.605

Tunnel Static Pressure (in H_2O):	
Beginning of Test	End of Test
-0.28	-0.28

Technician Signature: Tony Tong Date: 05/02/2023

OMNI-Test Laboratories, Inc.

ASTM E2780 Wood Heater Run Sheets

Client: Kuma Project Number: 0123WM014E Run Number: 5
Model: K-251 Tracking Number: 2464 Date: 05/02/2023
Test Crew: Tony Tong
OMNI Equipment ID numbers: 00340, 00431, T61, 00353

Wood Heater Fuel Data

Fuel: Douglas fir, untreated and air dried, standard grade or better dimensional lumber

Pre-Burn Fuel

Calibration: Cal Value (1) = 12% Actual Reading 12.9
Cal Value (2) = 22% Actual Reading 22.7

Piece:	Length:	Reading:	Piece:	Length:	Reading:
1	12 in	19.5	7	16 in	23.8
2	12 in	21.2	8	in	
3	12 in	19.5	9	in	
4	12 in	19.2	10	in	
5	16 in	20.6	11	in	
6	16 in	24.7	12	in	

Total Pre-Burn Fuel Weight: 9.9 lbs Pre-Burn Fuel Average Moisture:

Time (clock): 9:00 Room Temperature (F): 73 Initials: TT

Test Fuel

Firebox Volume (ft³): 2.56
Load Weight Range (lb): (16.13, 19.76)
Test Fuel Piece Length (in): 17.25"
Total Wet Fuel Load Weight (lb): ~~18.8~~ 18.7 (3.76, 4.70)

15:18 dry
6.88 hr
6:55 burning

Fuel Type & Amount: 2 x 4: 4 4 x 4: 2
Weight (with spacers): 9.3 lbs Weight (with spacers): 9.45 lbs

Piece:	Weight (lbs):	Moisture Readings (%DB):			Fuel Type:
1	1.9	24.9	22.3	25.3	2x4
2	1.9	22.6	24.5	26.7	2x4
3	1.7	21.0	19.2	26.7	2x4
4	1.8	26.3	20.9	23.8	2x4
5	4.8	18.9	22.0	24.3	4x4
6	4.3	21.4	22.4	23.8	4x4
7					

Spacer Moisture Readings (%DB)

16.9	24.3	23.8	18.1	14.0	20.9	22.0	24.4
23.8	22.0	19.0	22.7	24.9	21.9	15.0	23.8
14.2	23.2	22.4	18.8				

Time (clock): 9:20 Room Temperature (F): 73 Initials: TT

Technician Signature: Tony Tong Date: 05/02/2023

Run 6

Medium Low Burn (Category II)

Wood Heater Preburn Data - ASTM E2780

Run: 6

Technician Signatu

Manufacturer: Kuma Stoves
Model: K-251
Tracking No.: 2464
Project No.: 0123WM014E
Test Date: 5/9/23
Beginning Clock Time: 10:11

Preburn Fuel Data

4 pieces @ 12 inches
3 pieces @ 16 inches
pieces @ inches

Fuel Moisture Readings (% DB):

22.1	24.2	24.5	22.2	19.1	24.8	23.8

Avg Preburn Moisture (% DB): **22.96**

Coal Bed Range (lb):	**3.6** (min)	**4.5** (max)

			Temperatures (°F)								
Elapsed Time (min)	Scale (lb)	Stack Draft (in H_2O)	FB Top	FB Bottom	FB Back	FB Left	FB Right	Cat Exit	Avg. FB	Stack	Ambient
0	7.7	-0.066	655	335	348	446	434	3218	443.5	497	70
1	7.5	-0.058	656	333	356	449	435	3218	445.9	434	70
2	7.4	-0.059	658	334	360	451	437	3218	447.9	393	70
3	7.3	-0.055	655	335	363	453	438	3218	448.7	371	70
4	7.3	-0.053	651	335	365	454	438	3218	448.6	356	70
5	7.2	-0.052	646	336	366	454	438	3218	447.8	345	70
6	7.2	-0.051	640	336	366	453	437	3218	446.6	339	70
7	7.1	-0.05	633	337	366	453	436	3218	444.9	333	70
8	7	-0.05	627	337	366	452	434	3218	443.1	328	70
9	6.9	-0.05	621	337	365	451	433	3218	441.5	324	70
10	6.9	-0.048	618	337	364	451	431	3218	440.4	323	70
11	6.8	-0.048	615	337	363	450	430	3218	439.1	318	70
12	6.7	-0.047	611	337	362	450	429	3218	437.7	314	70
13	6.7	-0.047	606	337	362	449	427	3218	436.2	310	70
14	6.6	-0.047	601	337	361	449	427	3218	435	306	70
15	6.5	-0.046	597	337	360	448	426	3218	433.7	304	70
16	6.5	-0.046	594	337	360	447	425	3218	432.8	302	70
17	6.4	-0.046	593	336	359	447	425	3218	432.1	301	70
18	6.3	-0.046	591	336	359	446	425	3218	431.4	300	70
19	6.3	-0.047	589	336	359	446	424	3218	430.8	299	70
20	6.2	-0.045	588	336	360	445	424	3218	430.4	298	70
21	6.1	-0.047	587	335	360	445	424	3218	430	299	70
22	6	-0.044	587	335	360	444	424	3218	429.9	298	70
23	6	-0.045	587	335	361	444	424	3218	429.9	297	70
24	5.9	-0.044	587	334	362	443	424	3218	430	297	70
25	5.8	-0.045	587	334	363	443	423	3218	430	294	70
26	5.8	-0.043	589	334	365	442	423	3218	430.5	291	70
27	5.7	-0.044	609	333	365	441	423	3218	434.3	293	70
28	5.6	-0.045	632	333	365	440	422	3218	438.4	298	70
29	5.5	-0.046	654	333	364	438	422	3218	442.1	303	70
30	5.5	-0.044	675	333	364	436	421	3218	445.5	308	70
31	5.4	-0.047	693	332	363	434	420	3218	448.4	311	70
32	5.3	-0.047	710	332	362	432	419	3218	450.9	314	70
33	5.2	-0.047	724	332	361	431	418	3218	453	316	70
34	5.1	-0.047	737	331	360	429	417	3218	454.6	318	70
35	5.1	-0.046	746	331	359	427	415	3218	455.8	318	70
36	5	-0.047	754	331	358	426	415	3218	456.7	319	70
37	4.9	-0.047	759	331	357	425	414	3218	457.3	320	70
38	4.8	-0.046	764	331	357	424	413	3218	457.7	320	70
39	4.8	-0.047	767	330	357	423	413	3218	458	320	70
40	4.7	-0.047	769	330	356	422	412	3218	457.8	321	70
41	4.6	-0.047	769	330	356	421	412	3218	457.5	320	70
42	4.5	-0.047	769	330	355	421	412	3218	457.2	321	70

Wood Heater Preburn Data - ASTM E2780

Run: 6

Technician Signatu

Manufacturer: Kuma Stoves
Model: K-251
Tracking No.: 2464
Project No.: 0123WM014E
Test Date: 5/9/23
Beginning Clock Time: 10:11

Preburn Fuel Data

4 pieces @ 12 inches
3 pieces @ 16 inches
pieces @ inches

Fuel Moisture Readings (% DB):

22.1	24.2	24.5	22.2	19.1	24.8	23.8

Avg Preburn Moisture (% DB): **22.96**

Coal Bed Range (lb):	**3.6** (min)	**4.5** (max)

			Temperatures (°F)								
Elapsed Time (min)	Scale (lb)	Stack Draft (in H_2O)	FB Top	FB Bottom	FB Back	FB Left	FB Right	Cat Exit	Avg. FB	Stack	Ambient
43	4.5	-0.047	769	330	355	420	412	3218	457	320	70
44	4.4	-0.047	768	330	354	420	412	3218	456.7	320	70
45	4.4	-0.046	767	330	354	419	411	3218	456.5	320	70
46	4.3	-0.046	766	330	354	419	412	3218	456.2	320	70
47	4.2	-0.047	765	330	354	419	412	3218	455.8	320	70
48	4.2	-0.046	763	330	354	419	412	3218	455.5	319	70
49	4.1	-0.046	762	330	354	418	412	3218	455.2	318	70
50	4.1	-0.045	760	330	354	418	413	3218	455.1	318	70
51	4	-0.045	758	331	354	418	413	3218	454.8	317	70
52	4	-0.046	755	331	354	418	414	3218	454.3	316	70
53	3.9	-0.045	750	331	354	418	414	3218	453.3	314	70
54	3.8	-0.045	742	331	354	418	414	3218	451.8	312	70
55	3.8	-0.046	731	332	354	418	414	3218	449.8	309	70
56	3.7	-0.045	717	332	354	418	414	3218	447.1	306	70
57	3.7	-0.043	702	332	354	418	414	3218	443.9	303	70
58	3.6	-0.043	686	332	354	418	414	3218	440.6	299	70
59	3.6	-0.043	669	332	353	417	414	3218	437.2	294	70
60	3.6	-0.041	654	333	353	417	413	3218	433.9	291	70

Wood Heater Test Fuel Data - ASTM E2780

Manufacturer :	Kuma Stoves
Model :	K-251
Tracking No. :	2464
Project No. :	0123WM014E
Test Date :	5/9/2023
Run No. :	6

Moisture Meter Cal	
Cal Block	Measured
12.0	12.0
22.0	22.0

Firebox Volume :	2.56	ft3
% 2 x 4 Required :	35 - 65	%
Ideal Fuel Weight :	17.92	lb.
Minimum Fuel Weight :	16.13	lb.
Maximum Fuel Weight :	19.71	lb.

Fuel Piece Data

PC #	Weight, lb	Size	Length, In	Moisture Readings, Dry Basis %			Average MC, % db	Dry Weight, lb.	Volume, ft3	Wet Weights, lb 4 x 4	Wet Weights, lb 2 x 4	Dry Weights, lb 4 x 4	Dry Weights, lb 2 x 4
1	1.70	2x4	17.25	23.8	23.8	20.6	22.7	1.39	0.0524		1.7		1.39
2	1.80	2x4	17.25	23.1	23.8	20.0	22.3	1.47	0.0524		1.8		1.47
3	1.70	2x4	17.25	22.2	23.8	19.1	21.7	1.40	0.0524		1.7		1.40
4	1.80	2x4	17.25	21.9	19.5	24.8	22.1	1.47	0.0524		1.8		1.47
5	4.20	4x4	17.25	20.4	21.4	21.9	21.2	3.46	0.1223	4.2		3.46	
6	4.70	4x4	17.25	20.6	21.2	22.2	21.3	3.87	0.1223	4.7		3.87	
7													
8													
9													

Spacer Data

Moisture Readings, Dry Basis % (One reading per spacer)								
11.3	11.5	11.1	11.3	10.9	8.7	9.4	10.2	
10.9	10.9	10.1	11.8	10.4	11.6	11.4	11.2	
10.3	11.1	10.9	11.1					

Avg : 10.8

Assembled Crib Fuel Load with Spacers Attatched

PC #	Weight, lb with Spacers	Size	4 x 4s	2 x 4s
1	2.10	2x4		2.1000
2	2.20	2x4		2.2000
3	2.10	2x4		2.1000
4	2.20	2x4		2.2000
5	4.40	4x4	4.40	
6	4.90	4x4	4.90	
7				
8				
9				

Combined Mass of 4 x 4s	9.3	lb
Combined Mass of 2 x 4s	8.6	lb
Total Wet Mass of Fuel Load	**17.9**	lb

Fuel Load Properties

Type	*Number of Pieces*	*Wet Weight, lb.*	*Dry Weight, lb.*	*Fuel Loading Density, lb/ft 3* Wet Basis	*Fuel Loading Density, lb/ft 3* Dry Basis	Dry Fuel Density, lb/ft3	Wet Fuel Density, lb/ft3	***Moisture, %*** Dry Basis	***Moisture, %*** Wet Basis
2 x 4	4	7.0	5.73	6.99	5.81	28.77	35.01	20.37	16.92
4 x 4	2	8.9	7.34						
Spacers	20	2.0	1.80						
Totals		17.9	14.87						

Compliance Checks

	Fuel Load, Wet Lb.	Load Density, lb/ft3 of FB vol	Fuel Density, lb/ft3	% of Fuel load mass which is 2x4	Fuel Load Peices Mositure, % db
Measured	17.9	6.99	28.77	48	21.9
Required	16.1 - 19.7	6.3 - 7.7	25 - 36	35 - 65	19 -25
Complies ?	Yes	Yes	Yes	Yes	Yes

Wood Heater Test Data

u

Run: 6

Manufacturer: Kuma Stoves
Model: K-251
Tracking No.: 2464
Project No.: 0123WM014E
Test Date: 09-May-23
Beginning Clock Time: 11:12

Total Sampling Time: 388 min
Recording Interval: 1 min
Tunnel Diameter: 6
Background Sample Volume: 58.621 cubic feet

PM Control Modules: 335,336
Dilution Tunnel MW(dry): 29.00 lb/lb-mole
Dilution Tunnel MW(wet): 28.78 lb/lb-mole
Dilution Tunnel H2O: 2.00 percent
Dilution Tunnel Static: -0.500 "H2O
Tunnel Area: 0.19635 ft2
Pitot Tube Cp: 0.99

Avg. Tunnel Velocity: 24.90 ft/sec.
Initial Tunnel Flow: 284.9 scfm
Average Tunnel Flow: 282.6 scfm
Post-Test Leak Check (1st Hr): 0.001 cfm @ 3 in. Hg
Post-Test Leak Check (1): 0.002 cfm @ 3 in. Hg
Post-Test Leak Check (2): 0.000 cfm @ 5 in. Hg
Average Test Piece Fuel Moisture: 20.37 Dry Basis %

Technician Signature:_____

Export to PDF

Meter Box Y Factor: 1.007 (1) 1.015 (2) 1.012 (Amb)

Barometric Pressure:

Begin	Middle	End	Average
30.14	30.09	30.03	30.09

Room Air Velocity, fpm
<50

OMNI Equipment Numbers: _____

Velocity Traverse Data

	Pt.1	Pt.2	Pt.3	Pt.4	Pt.5	Pt.6	Pt.7	Pt.8	Center	
Initial dP	0.132	0.164	0.158	0.112	0.106	0.166	0.170	0.130	0.181	"H2O
Temp:	80	80	80	80	80	80	80	80	80	°F

V_{strav} 25.11 ft/sec V_{scent} 28.43 ft/sec F_p 0.883

qwq

	Particulate Sampling Data														Fuel Weight (lb)		Temperature Data (°F)													Stack Gas Data		
Elapsed Time (min)	Gas Meter 1 (ft^3)	Gas Meter 2 (ft^3)	Sample Rate 1 (cfm)	Sample Rate 2 (cfm)	Orifice dH 1 ("H_2O)	Meter 1 Temp (°F)	Meter 1 Vacuum ("Hg)	Orifice dH 2 ("H_2O)	Meter 2 Temp (°F)	Meter 2 Vacuum ("Hg)	Dilution Tunnel (°F)	Dilution Tunnel Center dP	Pro. Rate 1	Pro. Rate 2	Scale Reading	Weight Change	Firebox Top	Firebox Bottom	Firebox Back	Firebox Left	Firebox Right	Avg. Stove Surface (Tot = ΔT)	Catalyst Exit	Stack	Filter 1	Dryer Exit 1	Filter 2	Dryer Exit 2	Ambient	Draft ("H_2O)	CO_2 (%)	CO (%)
Tot / Avg	**62.30**	**62.21**	**0.16**	**0.16**	**1.26**	**80.94**	**3.09**	**0.99**	**80.76**	**1.59**	**79.39**	**0.18**	**100.00**	**99.99**		-17.5	489	334	349	383	375	**101**	813	254	72	59	71	61	72	(0.04)	9.32	0.10
Minimum			0.15	0.14	1.10	71.00	2.59	0.62	72.00	1.50	76.00	0.17	98.11	93.25	0.00	-0.200	308	289	279	311	318	329	568	176	67	47	67	51	69	(0.06)	1.20	0.00
Max			0.16	0.16	1.30	84.00	3.19	1.01	83.00	1.60	116.00	0.18	102.35	101.83	17.80	0.300	775	382	387	431	420	444	1145	376	73	62	72	63	73	(0.02)	14.47	0.98
0	0.000	0.000			1.10	71	2.59	0.62	72	1.5	96	0.181			17.5		629	335	353	419	415	430	919	376	67	54	67	55	70	-0.035	1.2	0.58
1	0.152	0.142	0.15	0.14	1.28	71	2.74	0.99	72	1.5	116	0.177	100	93	17.8	0.3	601	336	353	419	415	425	855	364	69	48	69	51	70	-0.048	1.5	0.26
2	0.312	0.298	0.16	0.16	1.29	71	2.75	0.98	72	1.5	92	0.180	102	99	17.6	-0.2	579	335	354	417	414	420	782	322	70	47	69	51	70	-0.042	3.11	0.88
3	0.472	0.455	0.16	0.16	1.27	71	2.73	0.98	72	1.5	86	0.179	102	100	17.5	-0.1	563	334	353	414	413	415	745	313	70	47	69	51	70	-0.045	6.75	0.45
4	0.630	0.612	0.16	0.16	1.28	71	2.74	0.98	72	1.5	83	0.178	101	100	17.4	-0.1	556	334	351	411	411	413	742	299	69	47	69	51	70	-0.046	7.45	0.02
5	0.789	0.768	0.16	0.16	1.27	71	2.73	0.97	72	1.5	82	0.180	101	99	17.4	0	554	334	349	408	408	411	760	297	69	47	69	51	70	-0.047	8.43	0.03
6	0.948	0.925	0.16	0.16	1.26	71	2.72	0.97	72	1.5	81	0.180	100	99	17.3	-0.1	556	334	346	404	405	409	783	300	69	47	69	51	69	-0.048	8.73	0.03
7	1.108	1.083	0.16	0.16	1.29	71	2.76	1.01	72	1.5	81	0.181	101	99	17.3	0	558	334	343	401	402	408	803	305	69	48	69	51	69	-0.049	8.8	0.03
8	1.267	1.242	0.16	0.16	1.30	71	2.76	1.01	72	1.5	82	0.178	101	101	17.2	-0.1	561	334	340	397	398	406	818	308	69	48	69	51	70	-0.049	9.04	0.04
9	1.427	1.401	0.16	0.16	1.29	71	2.75	1.00	72	1.5	81	0.178	102	101	17.2	0	563	334	337	393	395	404	829	311	69	48	69	51	69	-0.049	8.9	0.03
10	1.588	1.560	0.16	0.16	1.29	72	2.76	1.01	72	1.5	81	0.180	101	100	17.1	-0.1	564	334	334	389	392	403	838	314	70	48	69	51	69	-0.050	8.75	0.02
11	1.749	1.720	0.16	0.16	1.29	72	2.74	1.00	72	1.5	81	0.177	102	102	17.0	-0.1	565	334	331	385	388	401	854	316	70	48	69	51	69	-0.050	9.19	0.03
12	1.908	1.879	0.16	0.16	1.28	72	2.75	1.01	72	1.5	81	0.178	101	101	16.9	-0.1	565	333	327	381	385	398	871	318	70	49	69	51	69	-0.050	8.81	0.02
13	2.068	2.038	0.16	0.16	1.28	72	2.74	1.01	73	1.5	81	0.180	101	100	16.9	0	564	333	324	377	382	396	880	318	70	49	69	51	69	-0.050	8.74	0.01
14	2.227	2.198	0.16	0.16	1.29	72	2.74	1.00	73	1.5	81	0.179	101	101	16.8	-0.1	563	332	322	373	379	394	885	319	70	49	69	51	69	-0.050	8.39	0
15	2.388	2.356	0.16	0.16	1.28	72	2.73	1.01	73	1.5	82	0.178	102	100	16.7	-0.1	562	332	319	370	376	392	884	318	70	49	69	51	69	-0.049	8.46	0
16	2.548	2.516	0.16	0.16	1.28	72	2.75	1.00	73	1.5	82	0.180	101	101	16.6	-0.1	560	331	316	367	374	390	883	319	70	50	69	52	69	-0.049	8.69	0
17	2.707	2.675	0.16	0.16	1.28	72	2.75	1.01	73	1.5	82	0.181	100	100	16.5	-0.1	562	330	314	363	371	388	888	323	70	50	69	52	69	-0.052	9.53	0.01
18	2.866	2.834	0.16	0.16	1.28	73	2.75	1.00	73	1.5	82	0.182	100	100	16.4	-0.1	568	330	311	360	369	388	899	328	70	50	69	52	69	-0.052	10.75	0.08
19	3.026	2.994	0.16	0.16	1.29	73	2.73	1.00	73	1.5	82	0.182	100	100	16.2	-0.2	576	329	309	357	367	388	905	329	70	51	69	52	69	-0.051	9.47	0.02
20	3.187	3.153	0.16	0.16	1.28	73	2.74	1.00	74	1.5	82	0.181	101	100	16.1	-0.1	581	328	307	355	364	387	903	331	70	51	69	52	69	-0.050	9.27	0.02
21	3.346	3.312	0.16	0.16	1.28	73	2.73	1.00	74	1.5	82	0.182	100	100	16.1	0	585	327	305	352	362	386	900	332	70	51	69	52	69	-0.051	9.8	0.03
22	3.505	3.472	0.16	0.16	1.28	73	2.75	1.00	74	1.5	82	0.180	100	101	16.0	-0.1	588	326	302	349	360	385	900	332	70	51	69	53	69	-0.050	9.37	0.02
23	3.665	3.630	0.16	0.16	1.28	73	2.73	1.00	74	1.5	82	0.178	101	100	16.0	0	590	326	300	347	358	384	905	331	70	51	70	53	69	-0.051	9.34	0.05
24	3.826	3.790	0.16	0.16	1.28	74	2.75	1.00	74	1.5	82	0.180	101	101	15.9	-0.1	592	325	298	345	356	383	918	332	70	52	70	53	69	-0.051	9.72	0.06
25	3.985	3.949	0.16	0.16	1.27	74	2.75	1.00	74	1.5	82	0.179	100	100	15.8	-0.1	593	324	297	343	354	382	928	333	70	52	70	53	69	-0.050	9.7	0.02
26	4.145	4.108	0.16	0.16	1.28	74	2.75	1.00	74	1.5	82	0.178	101	101	15.7	-0.1	594	323	295	341	352	381	935	332	70	52	70	53	69	-0.051	9.76	0.05
27	4.305	4.268	0.16	0.16	1.28	74	2.74	1.00	75	1.5	82	0.179	101	101	15.6	-0.1	597	323	293	339	351	381	942	333	70	52	70	54	69	-0.051	10.09	0.07
28	4.465	4.427	0.16	0.16	1.27	74	2.75	1.00	75	1.5	83	0.177	102	101	15.6	0	600	322	292	337	349	380	956	337	70	52	70	54	69	-0.052	10.86	0.12
29	4.625	4.586	0.16	0.16	1.27	74	2.74	1.00	75	1.6	83	0.180	101	100	15.5	-0.1	605	321	290	336	348	380	977	341	70	53	70	54	69	-0.052	12.84	0.21
30	4.785	4.746	0.16	0.16	1.28	74	2.76	1.00	75	1.5	83	0.178	101	101	15.4	-0.1	609	320	289	335	347	380	995	343	70	53	70	54	69	-0.051	12.17	0.1
31	4.944	4.905	0.16	0.16	1.28	75	2.75	1.00	75	1.5	82	0.179	100	100	15.3	-0.1	605	320	289	334	347	379	1009	342	71	53	70	54	69	-0.052	11.91	0.05
32	5.104	5.065	0.16	0.16	1.28	75	2.75	1.00	75	1.6	83	0.179	101	101	15.1	-0.2	607	319	288	334	347	379	1024	345	71	53	70	54	69	-0.052	12.69	0.16
33	5.265	5.225	0.16	0.16	1.28	75	2.75	1.00	75	1.6	83	0.179	101	101	15.0	-0.1	611	318	287	334	346	379	1042	347	71	53	70	55	69	-0.053	13.53	0.37
34	5.425	5.384	0.16	0.16	1.28	75	2.75	1.00	76	1.6	82	0.177	101	101	14.9	-0.1	616	318	286	334	346	380	1058	347	71	54	70	55	69	-0.053	13.29	0.17
35	5.585	5.543	0.16	0.16	1.27	75	2.75	1.00	76	1.5	82	0.176	102	101	14.8	-0.1	621	317	285	334	346	381	1070	347	71	54	70	55	69	-0.053	12.99	0.3
36	5.745	5.704	0.16	0.16	1.28	75	2.76	1.00	76	1.5	83	0.179	101	101	14.6	-0.2	628	317	284	334	346	382	1078	351	71	54	70	55	69	-0.054	13.8	0.6
37	5.905	5.863	0.16	0.16	1.28	75	2.75	1.00	76	1.6	82	0.180	100	100	14.5	-0.1	635	316	283	334	347	383	1085	353	71	54	70	55	69	-0.054	13.77	0.74
38	6.066	6.022	0.16	0.16	1.28	76	2.75	1.00	76	1.6	83	0.178	101	100	14.4	-0.1	642	315	282	335	347	384	1089	355	71	54	70	55	69	-0.054	13.7	0.82
39	6.226	6.183	0.16	0.16	1.28	76	2.76	1.00	76	1.6	83	0.180	100	101	14.3	-0.1	649	315	282	335	347	386	1093	356	71	54	70	56	70	-0.054	13.44	0.87
40	6.386	6.342	0.16	0.16	1.28	76	2.76	1.00	76	1.6	83	0.179	101	100	14.2	-0.1	655	314	281	335	348	387	1097	358	71	55	70	56	70	-0.054	12.51	0.83
41	6.546	6.501	0.16	0.16	1.28	76	2.76	1.00	77	1.6	83	0.178	101	100	14.1	-0.1	661	313	280	335	349	388	1100	359	71	55	70	56	69	-0.054	13.9	0.98

Wood Heater Test Data

u

Run: 6

Manufacturer: Kuma Stoves
Model: K-251
Tracking No.: 2464
Project No.: 0123WM014E
Test Date: 09-May-23
Beginning Clock Time: 11:12

Total Sampling Time: 388 min
Recording Interval: 1 min
Tunnel Diameter: 6
Background Sample Volume: 58.621 cubic feet

PM Control Modules: 335,336
Dilution Tunnel MW(dry): 29.00 lb/lb-mole
Dilution Tunnel MW(wet): 28.78 lb/lb-mole
Dilution Tunnel H2O: 2.00 percent
Dilution Tunnel Static: -0.500 "H2O
Tunnel Area: 0.19635 ft2
Pitot Tube Cp: 0.99

Avg. Tunnel Velocity: 24.90 ft/sec.
Initial Tunnel Flow: 284.9 scfm
Average Tunnel Flow: 282.6 scfm
Post-Test Leak Check (1st Hr): 0.001 cfm @ 3 in. Hg
Post-Test Leak Check (1): 0.002 cfm @ 3 in. Hg
Post-Test Leak Check (2): 0.000 cfm @ 5 in. Hg
Average Test Piece Fuel Moisture: 20.37 Dry Basis %

Technician Signature:_____

Meter Box Y Factor: 1.007 (1) 1.015 (2) 1.012 (Amb)

Export to PDF

Barometric Pressure:

Begin	Middle	End	Average
30.14	30.09	30.03	30.09

Room Air Velocity, fpm
<50

OMNI Equipment Numbers: _____

Velocity Traverse Data

	Pt.1	Pt.2	Pt.3	Pt.4	Pt.5	Pt.6	Pt.7	Pt.8	Center	
Initial dP	0.132	0.164	0.158	0.112	0.106	0.166	0.170	0.130	0.181	"H2O
Temp:	80	80	80	80	80	80	80	80	80	°F

V_{strav} 25.11 ft/sec V_{scent} 28.43 ft/sec F_p 0.883

qwq

	Particulate Sampling Data														Fuel Weight (lb)		Temperature Data (°F)													Stack Gas Data		
Elapsed Time (min)	Gas Meter 1 (ft^3)	Gas Meter 2 (ft^3)	Sample Rate 1 (cfm)	Sample Rate 2 (cfm)	Orifice dH 1 ("H_2O)	Meter 1 Temp (°F)	Meter 1 Vacuum ("Hg)	Orifice dH 2 ("H_2O)	Meter 2 Temp (°F)	Meter 2 Vacuum ("Hg)	Dilution Tunnel (°F)	Dilution Tunnel Center dP	Pro. Rate 1	Pro. Rate 2	Scale Reading	Weight Change	Firebox Top	Firebox Bottom	Firebox Back	Firebox Left	Firebox Right	Avg. Stove Surface (Tot = ΔT)	Catalyst Exit	Stack	Filter 1	Dryer Exit 1	Filter 2	Dryer Exit 2	Ambient	Draft ("H_2O)	CO_2 (%)	CO (%)
42	6.707	6.662	0.16	0.16	1.28	76	2.75	1.00	77	1.6	83	0.178	101	101	14.0	-0.1	666	313	280	335	349	389	1097	360	71	55	70	56	70	-0.054	14.14	0.7
43	6.868	6.821	0.16	0.16	1.28	76	2.76	1.00	77	1.6	83	0.179	101	100	13.8	-0.2	671	312	280	336	350	390	1092	360	71	55	70	56	70	-0.055	14.1	0.77
44	7.028	6.981	0.16	0.16	1.27	76	2.75	1.00	77	1.6	83	0.178	101	101	13.7	-0.1	675	311	280	336	351	391	1087	359	71	55	70	56	70	-0.054	13.82	0.64
45	7.188	7.141	0.16	0.16	1.28	77	2.76	1.00	77	1.6	83	0.178	101	101	13.6	-0.1	679	311	280	337	352	392	1083	359	71	55	70	57	70	-0.054	13.86	0.39
46	7.348	7.301	0.16	0.16	1.28	77	2.77	1.00	77	1.6	83	0.179	100	101	13.5	-0.1	683	310	280	337	352	392	1080	359	71	55	70	57	70	-0.053	14.05	0.3
47	7.509	7.460	0.16	0.16	1.28	77	2.75	1.00	77	1.6	83	0.180	101	100	13.3	-0.2	686	309	280	338	353	393	1078	358	71	56	70	57	70	-0.054	14.16	0.37
48	7.671	7.621	0.16	0.16	1.28	77	2.76	1.00	77	1.6	83	0.179	102	101	13.2	-0.1	688	309	280	338	354	394	1075	358	71	56	70	57	70	-0.053	14.22	0.4
49	7.831	7.781	0.16	0.16	1.27	77	2.76	1.00	77	1.6	83	0.180	100	100	13.1	-0.1	690	308	280	339	355	394	1073	358	71	56	70	57	70	-0.053	14.09	0.36
50	7.991	7.940	0.16	0.16	1.28	77	2.76	1.00	77	1.6	83	0.177	101	100	13.0	-0.1	692	307	280	340	356	395	1071	357	71	56	70	57	70	-0.052	14.14	0.29
51	8.151	8.101	0.16	0.16	1.28	77	2.76	1.00	78	1.6	83	0.178	101	101	12.9	-0.1	693	307	280	340	357	395	1070	356	71	56	70	57	70	-0.054	14.13	0.21
52	8.312	8.260	0.16	0.16	1.28	77	2.76	1.00	78	1.6	83	0.177	102	100	12.7	-0.2	693	306	279	341	359	396	1067	355	71	56	70	58	70	-0.053	14.04	0.15
53	8.474	8.421	0.16	0.16	1.28	77	2.75	1.00	78	1.6	83	0.179	102	101	12.5	-0.2	693	305	279	343	360	396	1066	353	71	57	70	58	70	-0.054	13.77	0.13
54	8.634	8.581	0.16	0.16	1.28	78	2.76	1.00	78	1.6	83	0.177	101	101	12.4	-0.1	693	305	279	344	361	396	1066	352	71	57	70	58	70	-0.052	13.8	0.12
55	8.794	8.741	0.16	0.16	1.28	78	2.75	1.01	78	1.6	83	0.178	100	101	12.3	-0.1	693	304	279	345	362	397	1065	352	71	57	70	58	70	-0.052	13.97	0.09
56	8.955	8.901	0.16	0.16	1.29	78	2.77	1.00	78	1.6	83	0.176	102	101	12.2	-0.1	693	304	279	347	363	397	1064	350	71	57	70	58	70	-0.051	13.92	0.14
57	9.115	9.062	0.16	0.16	1.29	78	2.76	1.00	78	1.6	83	0.178	100	101	12.1	-0.1	696	303	279	348	364	398	1068	351	71	57	70	58	70	-0.052	13.95	0.2
58	9.277	9.221	0.16	0.16	1.29	78	2.75	1.00	78	1.6	83	0.176	102	101	12.0	-0.1	700	303	279	350	365	399	1073	352	71	57	70	58	70	-0.053	13.95	0.26
59	9.438	9.382	0.16	0.16	1.28	78	2.77	1.00	78	1.6	83	0.178	101	101	11.9	-0.1	702	302	279	351	366	400	1077	352	71	57	70	58	70	-0.052	13.95	0.23
60	9.599	9.543	0.16	0.16	1.28	78	2.76	1.00	78	1.6	83	0.180	101	101	11.7	-0.2	704	302	279	353	367	401	1078	353	71	57	70	59	70	-0.052	14.08	0.24
61	9.756	9.702	0.16	0.16	1.28	78	3.17	1.00	78	1.6	83	0.178	99	100	11.6	-0.1	703	301	280	354	368	401	1075	351	68	57	70	59	70	-0.050	13.88	0.22
62	9.919	9.862	0.16	0.16	1.29	78	3.17	1.01	79	1.6	83	0.181	102	100	11.6	0	702	301	280	356	369	402	1073	351	69	58	70	59	70	-0.051	13.95	0.27
63	10.080	10.023	0.16	0.16	1.29	78	3.17	1.01	79	1.6	83	0.178	101	101	11.5	-0.1	702	301	280	357	370	402	1073	351	69	58	70	59	70	-0.052	14.19	0.34
64	10.242	10.183	0.16	0.16	1.28	78	3.18	1.00	79	1.6	83	0.179	101	100	11.3	-0.2	701	300	280	359	371	402	1074	352	69	58	70	59	70	-0.055	14.11	0.47
65	10.404	10.343	0.16	0.16	1.29	78	3.18	1.01	79	1.6	83	0.177	102	101	11.2	-0.1	702	300	281	360	372	403	1077	353	69	58	70	59	70	-0.056	14.28	0.51
66	10.565	10.504	0.16	0.16	1.29	79	3.17	1.01	79	1.6	83	0.178	101	101	11.1	-0.1	702	300	281	362	373	404	1081	353	69	58	70	59	70	-0.051	14.44	0.68
67	10.726	10.664	0.16	0.16	1.29	79	3.17	1.00	79	1.6	83	0.177	101	101	11.0	-0.1	702	300	282	364	374	404	1083	353	69	58	70	59	70	-0.055	14.38	0.6
68	10.887	10.824	0.16	0.16	1.29	79	3.18	1.01	79	1.6	83	0.178	101	100	11.0	0	702	299	283	365	376	405	1082	354	69	58	70	59	70	-0.052	14.47	0.48
69	11.049	10.985	0.16	0.16	1.29	79	3.18	1.00	79	1.6	83	0.178	102	101	10.8	-0.2	702	299	284	367	377	406	1081	353	70	58	70	59	70	-0.055	14.3	0.45
70	11.211	11.146	0.16	0.16	1.29	79	3.18	1.00	79	1.6	83	0.179	101	101	10.7	-0.1	702	299	285	369	378	407	1079	352	70	58	71	60	70	-0.053	14.31	0.69
71	11.373	11.306	0.16	0.16	1.28	79	3.18	1.00	79	1.6	83	0.178	102	100	10.6	-0.1	700	299	287	371	379	407	1077	353	70	58	71	60	71	-0.053	14.11	0.65
72	11.534	11.466	0.16	0.16	1.29	79	3.18	1.00	79	1.6	83	0.177	101	101	10.5	-0.1	698	299	288	373	380	408	1076	352	70	58	71	60	71	-0.051	14.19	0.76
73	11.694	11.627	0.16	0.16	1.27	79	3.14	1.00	79	1.6	83	0.180	100	100	10.3	-0.2	697	299	290	374	381	408	1076	352	70	58	71	60	71	-0.053	14.3	0.86
74	11.854	11.787	0.16	0.16	1.27	79	3.16	1.00	79	1.6	83	0.179	100	100	10.2	-0.1	696	299	291	376	382	409	1076	351	70	59	71	60	71	-0.053	14.35	0.85
75	12.015	11.947	0.16	0.16	1.27	79	3.15	1.01	79	1.6	84	0.179	101	100	10.1	-0.1	694	299	293	378	382	409	1073	348	70	59	71	60	71	-0.050	14.12	0.66
76	12.176	12.109	0.16	0.16	1.27	79	3.15	1.00	79	1.6	84	0.178	101	102	10.0	-0.1	692	299	295	380	383	410	1071	347	70	59	71	60	71	-0.057	14.01	0.77
77	12.336	12.269	0.16	0.16	1.27	79	3.15	1.00	80	1.6	83	0.177	101	101	9.9	-0.1	692	299	296	382	384	411	1071	346	70	59	71	60	71	-0.054	13.98	0.83
78	12.496	12.429	0.16	0.16	1.27	79	3.16	1.00	80	1.6	83	0.179	100	100	9.7	-0.2	691	298	298	384	385	411	1071	345	70	59	71	60	71	-0.053	14.03	0.56
79	12.656	12.590	0.16	0.16	1.27	79	3.16	1.00	80	1.6	83	0.179	100	101	9.6	-0.1	689	298	300	386	386	412	1069	343	70	59	71	60	71	-0.055	13.77	0.5
80	12.817	12.751	0.16	0.16	1.27	80	3.15	1.00	80	1.6	83	0.179	100	101	9.5	-0.1	688	298	302	388	387	413	1067	342	71	59	71	60	71	-0.055	13.67	0.32
81	12.978	12.911	0.16	0.16	1.27	80	3.16	1.00	80	1.6	83	0.177	101	101	9.4	-0.1	684	298	304	389	388	413	1065	340	71	59	71	61	71	-0.053	13.69	0.28
82	13.138	13.071	0.16	0.16	1.26	80	3.16	1.00	80	1.6	83	0.176	101	101	9.3	-0.1	679	298	306	391	388	412	1062	337	71	59	71	61	71	-0.054	13.64	0.24
83	13.299	13.233	0.16	0.16	1.27	80	3.15	1.01	80	1.6	82	0.177	101	102	9.2	-0.1	676	298	308	393	390	413	1059	336	71	59	71	61	71	-0.054	13.55	0.15
84	13.459	13.393	0.16	0.16	1.27	80	3.15	1.00	80	1.6	83	0.179	100	100	9.1	-0.1	673	298	310	395	391	413	1055	334	71	59	71	61	71	-0.052	13.57	0.06
85	13.619	13.553	0.16	0.16	1.27	80	3.15	1.00	80	1.6	83	0.178	100	100	9.0	-0.1	672	297	312	397	392	414	1053	332	71	59	71	61	71	-0.052	13.52	0.03
86	13.781	13.715	0.16	0.16	1.27	80	3.15	1.00	80	1.6	83	0.179	101	101	8.9	-0.1	672	297	314	399	393	415	1055	332	71	59	71	61	71	-0.052	13.19	0.02

Wood Heater Test Data

u

Run: 6

Manufacturer: Kuma Stoves
Model: K-251
Tracking No.: 2464
Project No.: 0123WM014E
Test Date: 09-May-23
Beginning Clock Time: 11:12

Total Sampling Time: 388 min
Recording Interval: 1 min
Tunnel Diameter: 6
Background Sample Volume: 58.621 cubic feet

PM Control Modules: 335,336
Dilution Tunnel MW(dry): 29.00 lb/lb-mole
Dilution Tunnel MW(wet): 28.78 lb/lb-mole
Dilution Tunnel H2O: 2.00 percent
Dilution Tunnel Static: -0.500 "H2O
Tunnel Area: 0.19635 ft2
Pitot Tube Cp: 0.99

Avg. Tunnel Velocity: 24.90 ft/sec.
Initial Tunnel Flow: 284.9 scfm
Average Tunnel Flow: 282.6 scfm
Post-Test Leak Check (1st Hr): 0.001 cfm @ 3 in. Hg
Post-Test Leak Check (1): 0.002 cfm @ 3 in. Hg
Post-Test Leak Check (2): 0.000 cfm @ 5 in. Hg
Average Test Piece Fuel Moisture: 20.37 Dry Basis %

Technician Signature:_____

Export to PDF

Meter Box Y Factor: 1.007 (1) 1.015 (2) 1.012 (Amb)

Barometric Pressure:

Begin	Middle	End	Average
30.14	30.09	30.03	30.09

Room Air Velocity, fpm
<50

OMNI Equipment Numbers: _____

Velocity Traverse Data

	Pt.1	Pt.2	Pt.3	Pt.4	Pt.5	Pt.6	Pt.7	Pt.8	Center	
Initial dP	0.132	0.164	0.158	0.112	0.106	0.166	0.170	0.130	0.181	"H2O
Temp:	80	80	80	80	80	80	80	80	80	°F

V_{strav} 25.11 ft/sec V_{scent} 28.43 ft/sec F_p 0.883

qwq

	Particulate Sampling Data														Fuel Weight (lb)		Temperature Data (°F)													Stack Gas Data		
Elapsed Time (min)	Gas Meter 1 (ft^3)	Gas Meter 2 (ft^3)	Sample Rate 1 (cfm)	Sample Rate 2 (cfm)	Orifice dH 1 ("H_2O)	Meter 1 Temp (°F)	Meter 1 Vacuum ("Hg)	Orifice dH 2 ("H_2O)	Meter 2 Temp (°F)	Meter 2 Vacuum ("Hg)	Dilution Tunnel (°F)	Dilution Tunnel Center dP	Pro. Rate 1	Pro. Rate 2	Scale Reading	Weight Change	Firebox Top	Firebox Bottom	Firebox Back	Firebox Left	Firebox Right	Avg. Stove Surface (Tot = ΔT)	Catalyst Exit	Stack	Filter 1	Dryer Exit 1	Filter 2	Dryer Exit 2	Ambient	Draft ("H_2O)	CO_2 (%)	CO (%)
87	13.941	13.875	0.16	0.16	1.26	80	3.15	1.00	80	1.6	83	0.179	100	100	8.8	-0.1	671	297	316	401	394	416	1056	331	71	59	71	61	71	-0.050	13.11	0.02
88	14.101	14.035	0.16	0.16	1.28	80	3.18	1.00	80	1.6	82	0.179	100	100	8.7	-0.1	669	297	319	403	395	417	1054	329	71	59	71	61	71	-0.050	12.97	0.01
89	14.262	14.196	0.16	0.16	1.29	80	3.17	1.00	80	1.6	82	0.177	101	101	8.6	-0.1	667	297	321	405	396	417	1050	328	71	59	71	61	71	-0.051	12.93	0.01
90	14.424	14.357	0.16	0.16	1.29	80	3.19	1.00	80	1.6	82	0.178	101	101	8.5	-0.1	665	297	323	406	396	417	1048	326	71	60	71	61	71	-0.049	12.87	0.01
91	14.586	14.517	0.16	0.16	1.29	80	3.17	1.00	80	1.6	82	0.178	101	100	8.5	0	662	296	325	408	397	418	1045	325	71	60	71	61	71	-0.050	12.81	0
92	14.748	14.678	0.16	0.16	1.28	80	3.15	1.00	80	1.6	82	0.177	102	101	8.4	-0.1	659	296	327	410	398	418	1041	323	71	60	71	61	71	-0.049	12.73	0.01
93	14.908	14.839	0.16	0.16	1.27	80	3.16	1.01	80	1.6	82	0.179	100	100	8.3	-0.1	657	296	329	411	399	418	1038	322	71	60	71	61	71	-0.047	12.78	0
94	15.068	14.999	0.16	0.16	1.27	80	3.17	1.00	80	1.6	82	0.176	101	101	8.2	-0.1	656	296	331	413	400	419	1037	321	71	60	71	61	71	-0.049	12.81	0.02
95	15.229	15.160	0.16	0.16	1.27	80	3.16	1.00	80	1.6	82	0.179	100	100	8.1	-0.1	654	295	333	414	400	419	1035	321	71	60	71	61	72	-0.048	12.66	0.01
96	15.390	15.322	0.16	0.16	1.28	80	3.16	1.00	80	1.6	82	0.180	100	101	8.0	-0.1	652	295	335	415	401	420	1032	319	71	60	71	61	72	-0.047	12.49	0
97	15.551	15.482	0.16	0.16	1.28	80	3.16	1.00	80	1.6	82	0.179	100	100	7.9	-0.1	651	295	336	417	402	420	1029	317	71	60	71	61	71	-0.047	12.14	0
98	15.712	15.643	0.16	0.16	1.27	80	3.16	1.01	80	1.6	81	0.178	101	101	7.9	0	649	294	338	418	402	420	1027	317	71	60	71	61	71	-0.047	11.9	0
99	15.873	15.803	0.16	0.16	1.27	80	3.17	1.01	80	1.6	81	0.178	101	100	7.7	-0.2	648	294	340	419	403	421	1023	316	71	60	71	61	72	-0.048	11.78	0.01
100	16.034	15.965	0.16	0.16	1.27	80	3.15	1.00	80	1.6	82	0.179	100	101	7.6	-0.1	645	294	341	420	403	421	1019	315	71	60	71	61	71	-0.047	11.64	0.01
101	16.194	16.125	0.16	0.16	1.27	80	3.15	1.01	80	1.6	82	0.178	100	100	7.6	0	643	293	343	421	404	421	1015	313	71	60	71	61	72	-0.047	11.51	0.01
102	16.355	16.286	0.16	0.16	1.28	80	3.17	1.00	80	1.6	82	0.179	100	100	7.5	-0.1	641	293	344	421	404	421	1010	312	71	60	71	62	71	-0.050	11.6	0.01
103	16.517	16.447	0.16	0.16	1.27	81	3.17	1.00	81	1.6	82	0.179	101	100	7.4	-0.1	638	293	346	422	404	421	1006	311	71	60	71	62	71	-0.048	11.69	0.01
104	16.678	16.608	0.16	0.16	1.27	81	3.16	1.00	81	1.6	81	0.177	101	101	7.3	-0.1	635	292	347	422	405	420	1001	311	71	60	71	62	72	-0.048	11.51	0.01
105	16.838	16.768	0.16	0.16	1.27	81	3.16	1.00	81	1.6	81	0.179	99	100	7.2	-0.1	631	292	349	423	405	420	996	310	71	60	71	62	72	-0.050	11.42	0.01
106	16.999	16.929	0.16	0.16	1.27	81	3.17	1.00	81	1.6	82	0.177	101	101	7.1	-0.1	628	292	350	423	405	420	991	308	71	60	71	62	71	-0.048	11.64	0
107	17.160	17.090	0.16	0.16	1.28	81	3.17	1.00	81	1.6	82	0.179	100	100	7.1	0	624	291	351	424	406	419	988	307	71	60	71	62	72	-0.049	11.56	0
108	17.321	17.251	0.16	0.16	1.27	81	3.17	1.00	81	1.6	81	0.177	101	101	7.0	-0.1	621	291	353	424	406	419	985	306	71	60	71	62	72	-0.047	11.58	0
109	17.483	17.411	0.16	0.16	1.27	81	3.16	1.00	81	1.6	81	0.177	101	100	7.0	0	618	291	354	424	406	419	983	305	71	60	71	62	72	-0.049	11.53	0
110	17.644	17.573	0.16	0.16	1.26	81	3.17	1.00	81	1.6	81	0.177	101	101	6.9	-0.1	620	291	355	424	406	419	982	302	71	60	71	62	72	-0.047	12.01	0.12
111	17.804	17.734	0.16	0.16	1.27	81	3.16	1.00	81	1.6	81	0.178	100	100	6.8	-0.1	636	290	356	424	406	422	1007	304	71	60	71	62	72	-0.046	12.91	0.21
112	17.965	17.894	0.16	0.16	1.27	81	3.16	1.00	81	1.6	81	0.177	101	100	6.7	-0.1	653	290	355	423	406	425	1034	308	71	60	71	62	72	-0.046	13.3	0.24
113	18.126	18.056	0.16	0.16	1.27	81	3.16	1.00	81	1.6	81	0.179	100	101	6.7	0	669	290	355	422	405	428	1054	311	71	60	71	62	72	-0.047	13.81	0.32
114	18.287	18.217	0.16	0.16	1.28	81	3.15	1.00	81	1.6	81	0.177	101	101	6.7	0	684	290	354	421	404	431	1073	316	71	60	71	62	72	-0.047	14.05	0.53
115	18.448	18.377	0.16	0.16	1.27	81	3.17	1.00	81	1.6	81	0.179	100	100	6.6	-0.1	699	289	353	420	404	433	1089	320	71	60	71	62	72	-0.048	14.43	0.7
116	18.609	18.538	0.16	0.16	1.26	81	3.17	1.00	81	1.6	81	0.177	101	101	6.5	-0.1	712	289	352	419	403	435	1104	323	71	60	71	62	72	-0.049	14.35	0.89
117	18.770	18.699	0.16	0.16	1.27	81	3.15	1.00	81	1.6	81	0.178	100	100	6.4	-0.1	725	289	351	418	402	437	1117	326	71	60	71	62	72	-0.049	14.36	0.95
118	18.931	18.860	0.16	0.16	1.27	81	3.16	1.00	81	1.6	81	0.177	101	101	6.3	-0.1	736	289	350	417	401	439	1127	327	71	60	71	62	72	-0.049	14.24	0.9
119	19.091	19.021	0.16	0.16	1.28	81	3.16	1.00	81	1.6	82	0.179	100	100	6.2	-0.1	746	289	349	416	400	440	1135	328	71	60	71	62	72	-0.049	14.25	0.72
120	19.253	19.182	0.16	0.16	1.27	81	3.16	1.00	81	1.6	82	0.179	101	100	6.2	0	752	289	349	415	400	441	1140	330	71	60	71	62	72	-0.049	13.75	0.27
121	19.414	19.343	0.16	0.16	1.27	81	3.16	1.00	81	1.6	82	0.177	101	101	6.1	-0.1	758	289	348	415	400	442	1141	330	71	60	71	62	71	-0.050	13.9	0.49
122	19.575	19.503	0.16	0.16	1.27	81	3.16	1.00	81	1.6	82	0.178	100	100	6.0	-0.1	765	289	347	414	400	443	1144	330	72	60	71	62	72	-0.049	14	0.4
123	19.735	19.664	0.16	0.16	1.27	81	3.16	1.00	81	1.6	83	0.178	100	101	5.9	-0.1	770	289	347	414	399	444	1145	330	72	60	71	62	72	-0.049	13.66	0.35
124	19.896	19.826	0.16	0.16	1.27	81	3.16	1.00	81	1.6	82	0.177	101	101	5.7	-0.2	773	289	346	414	399	444	1145	330	72	60	71	62	72	-0.049	13.54	0.32
125	20.058	19.986	0.16	0.16	1.27	81	3.16	1.00	81	1.6	82	0.177	101	100	5.6	-0.1	775	289	346	413	399	444	1143	329	72	60	71	62	72	-0.049	13.38	0.32
126	20.219	20.147	0.16	0.16	1.27	81	3.16	1.00	81	1.6	82	0.177	101	101	5.6	0	775	290	345	413	399	444	1140	333	72	60	71	62	72	-0.049	13.53	0.49
127	20.380	20.309	0.16	0.16	1.26	81	3.17	1.00	81	1.6	83	0.177	101	102	5.7	0.1	764	290	345	413	399	442	1124	336	72	60	71	62	72	-0.047	11.85	0.07
128	20.540	20.469	0.16	0.16	1.27	81	3.16	1.00	81	1.6	83	0.179	100	100	5.7	0	748	290	345	414	400	439	1097	333	72	60	71	62	72	-0.048	11.67	0.06
129	20.701	20.629	0.16	0.16	1.27	81	3.16	1.00	81	1.6	83	0.177	101	100	5.6	-0.1	732	291	346	414	401	437	1074	330	72	60	71	62	72	-0.052	11.97	0.06
130	20.862	20.791	0.16	0.16	1.27	81	3.16	1.00	81	1.6	82	0.179	100	101	5.6	0	718	291	346	415	402	434	1056	326	72	60	71	62	72	-0.049	11.75	0.04
131	21.024	20.952	0.16	0.16	1.26	81	3.17	1.00	81	1.6	82	0.177	101	101	5.5	-0.1	705	291	346	416	403	432	1041	322	72	61	71	62	72	-0.045	11.69	0.04

Wood Heater Test Data

u

Run: 6

Manufacturer: Kuma Stoves
Model: K-251
Tracking No.: 2464
Project No.: 0123WM014E
Test Date: 09-May-23
Beginning Clock Time: 11:12

Total Sampling Time: 388 min
Recording Interval: 1 min
Tunnel Diameter: 6
Background Sample Volume: 58.621 cubic feet

PM Control Modules: 335,336
Dilution Tunnel MW(dry): 29.00 lb/lb-mole
Dilution Tunnel MW(wet): 28.78 lb/lb-mole
Dilution Tunnel H2O: 2.00 percent
Dilution Tunnel Static: -0.500 "H2O
Tunnel Area: 0.19635 ft2
Pitot Tube Cp: 0.99

Avg. Tunnel Velocity: 24.90 ft/sec.
Initial Tunnel Flow: 284.9 scfm
Average Tunnel Flow: 282.6 scfm
Post-Test Leak Check (1st Hr): 0.001 cfm @ 3 in. Hg
Post-Test Leak Check (1): 0.002 cfm @ 3 in. Hg
Post-Test Leak Check (2): 0.000 cfm @ 5 in. Hg
Average Test Piece Fuel Moisture: 20.37 Dry Basis %

Technician Signature:_____

Meter Box Y Factor: 1.007 (1) 1.015 (2) 1.012 (Amb)

Export to PDF

Barometric Pressure:	Begin	Middle	End	Average
	30.14	30.09	30.03	30.09

Room Air Velocity, fpn
<50

OMNI Equipment Numbers: _____

Velocity Traverse Data

	Pt.1	Pt.2	Pt.3	Pt.4	Pt.5	Pt.6	Pt.7	Pt.8	Center	
Initial dP	0.132	0.164	0.158	0.112	0.106	0.166	0.170	0.130	0.181	"H2O
Temp:	80	80	80	80	80	80	80	80	80	°F

V_{strav} 25.11 ft/sec V_{scent} 28.43 ft/sec F_p 0.883

qwq

	Particulate Sampling Data														Fuel Weight (lb)		Temperature Data (°F)													Stack Gas Data		
Elapsed Time (min)	Gas Meter 1 (ft^3)	Gas Meter 2 (ft^3)	Sample Rate 1 (cfm)	Sample Rate 2 (cfm)	Orifice dH 1 ("H_2O)	Meter 1 Temp (°F)	Meter 1 Vacuum ("Hg)	Orifice dH 2 ("H_2O)	Meter 2 Temp (°F)	Meter 2 Vacuum ("Hg)	Dilution Tunnel (°F)	Dilution Tunnel Center dP	Pro. Rate 1	Pro. Rate 2	Scale Reading	Weight Change	Firebox Top	Firebox Bottom	Firebox Back	Firebox Left	Firebox Right	Avg. Stove Surface (Tot = ΔT)	Catalyst Exit	Stack	Filter 1	Dryer Exit 1	Filter 2	Dryer Exit 2	Ambient	Draft ("H_2O)	CO_2 (%)	CO (%)
132	21.185	21.112	0.16	0.16	1.27	81	3.17	1.00	81	1.6	82	0.177	101	100	5.5	0	693	292	347	417	404	431	1029	320	72	61	71	62	72	-0.049	11.69	0.04
133	21.346	21.273	0.16	0.16	1.26	81	3.15	1.00	81	1.6	82	0.180	100	100	5.4	-0.1	683	293	348	418	405	429	1020	316	72	61	71	62	72	-0.047	11.7	0.04
134	21.506	21.435	0.16	0.16	1.26	81	3.15	1.00	81	1.6	81	0.177	100	101	5.3	-0.1	674	293	349	419	406	428	1012	314	72	60	71	62	72	-0.049	11.54	0.05
135	21.666	21.595	0.16	0.16	1.26	81	3.16	1.00	81	1.6	81	0.177	100	100	5.2	-0.1	666	294	350	420	407	427	1004	312	72	61	71	62	72	-0.046	11.37	0.04
136	21.827	21.756	0.16	0.16	1.27	81	3.16	1.00	81	1.6	82	0.176	101	101	5.1	-0.1	657	294	352	421	409	427	995	310	72	61	71	62	72	-0.046	11.26	0.05
137	21.989	21.918	0.16	0.16	1.27	81	3.15	1.00	81	1.6	82	0.179	101	101	5.0	-0.1	649	295	353	422	410	426	986	308	72	61	71	62	72	-0.047	11.14	0.05
138	22.149	22.079	0.16	0.16	1.26	81	3.15	1.00	81	1.6	81	0.177	100	101	5.0	0	641	296	354	423	411	425	978	306	72	61	71	62	72	-0.046	11.02	0.05
139	22.309	22.239	0.16	0.16	1.26	81	3.16	1.00	81	1.6	81	0.176	100	100	4.9	-0.1	634	297	356	424	412	425	971	303	72	61	71	62	72	-0.045	11.12	0.05
140	22.470	22.400	0.16	0.16	1.26	81	3.16	1.00	81	1.6	82	0.179	100	100	4.8	-0.1	627	297	357	424	413	424	965	301	72	61	71	62	72	-0.045	11.03	0.05
141	22.630	22.562	0.16	0.16	1.27	81	3.16	1.00	81	1.6	81	0.181	99	100	4.8	0	621	298	359	425	414	423	960	298	72	61	71	62	72	-0.046	10.8	0.05
142	22.792	22.722	0.16	0.16	1.26	82	3.15	1.00	81	1.6	81	0.178	101	100	4.7	-0.1	615	299	360	426	414	423	955	296	72	61	71	62	72	-0.046	10.82	0.05
143	22.953	22.883	0.16	0.16	1.26	82	3.15	1.01	81	1.6	81	0.179	100	100	4.6	-0.1	609	299	362	426	415	422	950	294	72	61	71	62	72	-0.045	10.81	0.05
144	23.113	23.045	0.16	0.16	1.26	82	3.16	1.00	81	1.6	81	0.179	99	101	4.6	0	604	300	363	426	416	422	946	293	72	61	71	62	72	-0.045	10.8	0.05
145	23.273	23.206	0.16	0.16	1.27	82	3.16	1.00	81	1.6	81	0.178	100	100	4.5	-0.1	599	301	364	427	416	421	942	292	72	61	71	62	72	-0.044	10.68	0.05
146	23.434	23.367	0.16	0.16	1.26	82	3.16	1.00	81	1.6	81	0.178	100	100	4.5	0	594	301	365	427	417	421	937	290	72	61	71	62	72	-0.043	10.59	0.05
147	23.595	23.527	0.16	0.16	1.27	82	3.15	1.00	81	1.6	81	0.178	100	100	4.4	-0.1	590	302	367	427	417	421	934	287	72	61	71	62	72	-0.043	10.71	0.04
148	23.756	23.689	0.16	0.16	1.26	82	3.16	1.00	81	1.6	81	0.179	100	101	4.4	0	586	302	368	427	418	420	929	286	72	61	71	62	72	-0.044	10.55	0.05
149	23.917	23.850	0.16	0.16	1.26	82	3.16	1.00	81	1.6	80	0.178	100	100	4.3	-0.1	582	303	369	428	418	420	926	285	72	61	71	62	72	-0.043	10.59	0.04
150	24.077	24.010	0.16	0.16	1.26	82	3.16	1.00	81	1.6	80	0.177	100	100	4.3	0	578	304	370	428	419	420	922	283	72	61	71	62	72	-0.042	10.48	0.04
151	24.238	24.172	0.16	0.16	1.27	82	3.15	1.00	81	1.6	80	0.179	100	101	4.2	-0.1	574	304	371	428	419	419	919	281	72	61	71	62	72	-0.043	10.53	0.04
152	24.399	24.333	0.16	0.16	1.27	82	3.16	1.00	81	1.6	80	0.177	100	101	4.2	0	571	305	372	428	419	419	916	281	72	61	71	62	72	-0.042	10.56	0.05
153	24.561	24.494	0.16	0.16	1.27	82	3.19	1.00	81	1.6	80	0.177	101	101	4.2	0	568	305	373	428	419	419	913	280	72	61	71	62	72	-0.042	10.51	0.04
154	24.722	24.655	0.16	0.16	1.28	82	3.19	1.00	82	1.6	80	0.180	100	100	4.1	-0.1	565	306	374	428	419	418	911	278	72	61	71	62	72	-0.041	10.45	0.04
155	24.884	24.817	0.16	0.16	1.28	82	3.19	1.00	82	1.6	80	0.181	100	100	4.1	0	562	306	375	428	420	418	908	278	72	61	71	62	72	-0.042	10.16	0.03
156	25.046	24.977	0.16	0.16	1.28	82	3.18	1.00	81	1.6	80	0.179	100	99	4.0	-0.1	558	307	376	429	420	418	906	276	72	61	71	62	72	-0.042	10.29	0.04
157	25.207	25.138	0.16	0.16	1.28	82	3.18	1.00	82	1.6	80	0.178	100	100	3.9	-0.1	555	307	377	429	420	418	903	274	72	61	71	62	72	-0.041	10.27	0.04
158	25.369	25.299	0.16	0.16	1.28	82	3.19	1.00	82	1.6	80	0.176	101	101	4.0	0.1	552	308	378	429	420	417	901	272	72	61	71	62	72	-0.042	10.16	0.03
159	25.531	25.460	0.16	0.16	1.28	82	3.19	1.00	82	1.6	79	0.178	101	100	3.9	-0.1	549	308	379	429	420	417	898	271	72	61	71	62	72	-0.041	9.93	0.03
160	25.693	25.622	0.16	0.16	1.28	82	3.17	1.00	82	1.6	79	0.179	100	100	3.8	-0.1	547	309	379	429	420	417	896	270	72	61	71	62	72	-0.040	10.11	0.03
161	25.855	25.783	0.16	0.16	1.28	82	3.19	1.00	82	1.6	80	0.177	101	100	3.8	0	544	309	380	429	420	416	893	270	72	61	71	62	72	-0.040	10.1	0.03
162	26.017	25.944	0.16	0.16	1.28	82	3.17	1.00	82	1.6	80	0.178	101	100	3.7	-0.1	541	310	380	430	420	416	890	269	72	61	71	62	72	-0.041	10.01	0.03
163	26.178	26.105	0.16	0.16	1.28	82	3.17	1.00	82	1.6	80	0.177	100	100	3.7	0	538	310	381	430	420	416	887	267	72	61	71	62	72	-0.041	9.96	0.03
164	26.339	26.265	0.16	0.16	1.29	82	3.19	1.00	82	1.6	79	0.177	100	100	3.7	0	535	311	381	430	420	415	884	266	72	61	71	62	72	-0.041	9.92	0.03
165	26.501	26.427	0.16	0.16	1.28	82	3.17	1.00	82	1.6	79	0.176	101	101	3.6	-0.1	533	311	382	430	420	415	882	265	72	61	71	62	72	-0.041	10	0.03
166	26.663	26.588	0.16	0.16	1.28	82	3.19	1.00	82	1.6	80	0.177	101	100	3.6	0	531	312	382	430	420	415	880	263	72	61	71	62	72	-0.041	10.02	0.04
167	26.826	26.749	0.16	0.16	1.28	82	3.19	1.00	82	1.6	80	0.178	101	100	3.6	0	528	313	383	430	420	415	878	262	72	61	71	62	72	-0.041	9.82	0.03
168	26.987	26.910	0.16	0.16	1.26	82	3.15	1.00	82	1.6	80	0.176	101	101	3.5	-0.1	526	313	383	430	420	414	875	261	72	61	71	62	72	-0.040	9.95	0.04
169	27.147	27.072	0.16	0.16	1.26	82	3.15	1.00	82	1.6	80	0.176	100	101	3.5	0	524	314	384	430	420	414	872	261	72	61	71	62	72	-0.040	9.85	0.04
170	27.308	27.233	0.16	0.16	1.27	82	3.14	1.00	82	1.6	80	0.177	100	100	3.5	0	522	314	385	431	420	414	869	260	72	61	71	62	72	-0.040	9.83	0.04
171	27.468	27.393	0.16	0.16	1.27	82	3.16	0.99	82	1.6	79	0.176	100	100	3.4	-0.1	519	315	386	431	419	414	866	259	72	61	71	62	72	-0.038	9.77	0.04
172	27.629	27.553	0.16	0.16	1.27	82	3.16	0.99	82	1.6	79	0.181	99	99	3.3	-0.1	517	315	386	431	419	414	861	258	72	61	71	62	72	-0.039	9.57	0.03
173	27.790	27.714	0.16	0.16	1.26	82	3.14	0.99	82	1.6	79	0.179	100	100	3.3	0	514	316	387	431	418	413	859	256	72	61	71	62	72	-0.040	9.83	0.02
174	27.951	27.874	0.16	0.16	1.26	82	3.15	0.99	82	1.6	79	0.178	100	99	3.3	0	510	316	387	431	418	412	858	256	72	61	71	62	72	-0.038	9.61	0.02
175	28.111	28.034	0.16	0.16	1.26	82	3.15	0.99	82	1.6	79	0.179	99	99	3.2	-0.1	507	317	387	431	417	412	855	254	72	61	71	62	72	-0.038	9.6	0.02
176	28.272	28.195	0.16	0.16	1.26	82	3.14	0.99	82	1.6	79	0.178	100	100	3.2	0	503	317	387	431	417	411	852	252	72	61	71	62	72	-0.039	9.63	0.02

Wood Heater Test Data

u

Run: 6

Manufacturer: Kuma Stoves
Model: K-251
Tracking No.: 2464
Project No.: 0123WM014E
Test Date: 09-May-23
Beginning Clock Time: 11:12

Total Sampling Time: 388 min
Recording Interval: 1 min
Tunnel Diameter: 6
Background Sample Volume: 58.621 cubic feet

PM Control Modules: 335,336
Dilution Tunnel MW(dry): 29.00 lb/lb-mole
Dilution Tunnel MW(wet): 28.78 lb/lb-mole
Dilution Tunnel H2O: 2.00 percent
Dilution Tunnel Static: -0.500 "H2O
Tunnel Area: 0.19635 ft2
Pitot Tube Cp: 0.99

Avg. Tunnel Velocity: 24.90 ft/sec.
Initial Tunnel Flow: 284.9 scfm
Average Tunnel Flow: 282.6 scfm
Post-Test Leak Check (1st Hr): 0.001 cfm @ 3 in. Hg
Post-Test Leak Check (1): 0.002 cfm @ 3 in. Hg
Post-Test Leak Check (2): 0.000 cfm @ 5 in. Hg
Average Test Piece Fuel Moisture: 20.37 Dry Basis %

Technician Signature:_____

Meter Box Y Factor: 1.007 (1) 1.015 (2) 1.012 (Amb)

Export to PDF

Barometric Pressure:

Begin	Middle	End	Average
30.14	30.09	30.03	30.09

Room Air Velocity, fpm
<50

OMNI Equipment Numbers: _____

Velocity Traverse Data

	Pt.1	Pt.2	Pt.3	Pt.4	Pt.5	Pt.6	Pt.7	Pt.8	Center	
Initial dP	0.132	0.164	0.158	0.112	0.106	0.166	0.170	0.130	0.181	"H2O
Temp:	80	80	80	80	80	80	80	80	80	°F

V_{strav} 25.11 ft/sec V_{scent} 28.43 ft/sec F_p 0.883

qwq

	Particulate Sampling Data														Fuel Weight (lb)		Temperature Data (°F)													Stack Gas Data		
Elapsed Time (min)	Gas Meter 1 (ft^3)	Gas Meter 2 (ft^3)	Sample Rate 1 (cfm)	Sample Rate 2 (cfm)	Orifice dH 1 ("H_2O)	Meter 1 Temp (°F)	Meter 1 Vacuum ("Hg)	Orifice dH 2 ("H_2O)	Meter 2 Temp (°F)	Meter 2 Vacuum ("Hg)	Dilution Tunnel (°F)	Dilution Tunnel Center dP	Pro. Rate 1	Pro. Rate 2	Scale Reading	Weight Change	Firebox Top	Firebox Bottom	Firebox Back	Firebox Left	Firebox Right	Avg. Stove Surface (Tot = ΔT)	Catalyst Exit	Stack	Filter 1	Dryer Exit 1	Filter 2	Dryer Exit 2	Ambient	Draft ("H_2O)	CO_2 (%)	CO (%)
177	28.432	28.355	0.16	0.16	1.27	82	3.16	0.99	82	1.6	79	0.178	99	99	3.2	0	500	318	387	430	416	410	849	251	72	61	71	62	72	-0.040	9.66	0.02
178	28.594	28.515	0.16	0.16	1.26	82	3.15	0.99	82	1.6	79	0.179	100	99	3.2	0	497	318	387	430	416	410	847	249	72	61	71	62	72	-0.040	9.59	0.02
179	28.755	28.676	0.16	0.16	1.25	82	3.15	0.99	82	1.6	79	0.177	100	100	3.1	-0.1	494	319	387	430	415	409	843	249	72	61	71	62	72	-0.037	9.58	0.02
180	28.915	28.836	0.16	0.16	1.26	82	3.14	0.99	82	1.6	79	0.177	100	100	3.1	0	491	319	387	430	415	408	840	247	72	61	71	62	72	-0.037	9.51	0.02
181	29.075	28.996	0.16	0.16	1.27	82	3.16	0.99	82	1.6	79	0.178	99	99	3.0	-0.1	489	320	387	430	414	408	837	246	72	61	71	62	72	-0.038	9.56	0.02
182	29.236	29.158	0.16	0.16	1.26	82	3.16	0.99	82	1.6	79	0.177	100	101	3.0	0	487	320	387	429	414	407	834	245	72	61	71	62	72	-0.037	9.51	0.02
183	29.397	29.317	0.16	0.16	1.26	82	3.16	0.98	82	1.6	79	0.177	100	99	3.0	0	485	321	387	429	414	407	831	245	72	61	71	62	72	-0.037	9.57	0.03
184	29.558	29.478	0.16	0.16	1.26	82	3.15	0.99	82	1.6	79	0.178	100	100	2.9	-0.1	483	321	387	429	413	407	829	244	72	61	71	62	72	-0.037	9.57	0.03
185	29.718	29.638	0.16	0.16	1.26	82	3.16	0.98	82	1.6	79	0.179	99	99	2.9	0	481	322	387	429	413	406	827	244	72	61	71	62	72	-0.037	9.44	0.03
186	29.879	29.799	0.16	0.16	1.26	82	3.14	0.98	82	1.6	79	0.177	100	100	2.9	0	480	322	387	429	412	406	825	242	72	61	71	62	72	-0.037	9.31	0.03
187	30.039	29.958	0.16	0.16	1.26	82	3.16	0.99	82	1.6	78	0.177	100	99	2.9	0	478	322	387	429	412	406	822	241	72	61	71	62	72	-0.038	8.9	0.02
188	30.201	30.119	0.16	0.16	1.26	82	3.14	0.99	82	1.6	78	0.179	100	100	2.8	-0.1	475	323	387	428	411	405	817	240	72	61	71	62	72	-0.038	8.8	0.02
189	30.361	30.280	0.16	0.16	1.26	82	3.15	0.99	82	1.6	78	0.176	100	101	2.8	0	472	323	387	428	411	404	812	239	72	61	71	62	72	-0.036	8.86	0.01
190	30.522	30.440	0.16	0.16	1.26	82	3.16	0.99	82	1.6	78	0.177	100	100	2.8	0	468	324	387	428	410	403	806	238	72	61	71	62	72	-0.036	8.79	0.01
191	30.682	30.600	0.16	0.16	1.26	82	3.14	0.99	82	1.6	78	0.179	99	99	2.7	-0.1	464	324	387	427	410	402	800	236	72	61	71	62	72	-0.035	8.72	0.01
192	30.843	30.761	0.16	0.16	1.26	82	3.16	0.99	82	1.6	79	0.177	100	100	2.7	0	461	325	387	427	410	402	794	234	72	61	71	62	72	-0.036	8.61	0.01
193	31.004	30.921	0.16	0.16	1.26	82	3.16	0.99	82	1.6	78	0.177	100	100	2.7	0	457	325	386	427	409	401	788	233	72	61	71	62	72	-0.036	8.6	0.01
194	31.165	31.082	0.16	0.16	1.27	82	3.15	0.99	82	1.6	78	0.176	100	101	2.7	0	453	326	386	426	409	400	783	232	72	61	71	62	72	-0.035	8.55	0.01
195	31.326	31.243	0.16	0.16	1.26	82	3.16	0.99	82	1.6	78	0.178	100	100	2.7	0	449	326	385	426	408	399	777	230	72	61	71	62	72	-0.035	8.4	0.01
196	31.486	31.403	0.16	0.16	1.26	82	3.16	0.99	82	1.6	78	0.174	100	101	2.7	0	446	327	385	425	408	398	772	229	72	61	71	62	72	-0.035	8.43	0.01
197	31.647	31.563	0.16	0.16	1.26	82	3.16	0.99	82	1.6	78	0.179	100	99	2.6	-0.1	443	327	385	425	407	397	768	227	72	61	71	62	72	-0.035	8.37	0.01
198	31.807	31.724	0.16	0.16	1.26	82	3.16	0.99	82	1.6	78	0.177	100	100	2.6	0	440	328	384	424	407	397	763	226	72	61	71	62	72	-0.035	8.38	0.01
199	31.969	31.884	0.16	0.16	1.26	82	3.15	0.98	82	1.6	78	0.179	100	99	2.6	0	437	329	384	424	406	396	759	225	72	61	71	62	72	-0.034	8.47	0.01
200	32.130	32.044	0.16	0.16	1.26	82	3.15	0.99	82	1.6	78	0.176	100	100	2.6	0	434	329	384	423	406	395	755	224	72	61	71	62	72	-0.034	8.5	0
201	32.290	32.205	0.16	0.16	1.26	82	3.14	0.99	82	1.6	78	0.176	100	101	2.6	0	431	330	384	423	405	395	752	223	72	61	71	62	72	-0.033	8.57	0
202	32.450	32.365	0.16	0.16	1.27	82	3.14	0.98	82	1.6	77	0.177	99	100	2.5	-0.1	428	331	383	422	405	394	749	222	72	61	71	62	72	-0.031	8.49	0
203	32.611	32.526	0.16	0.16	1.26	82	3.15	0.99	82	1.6	78	0.178	100	100	2.5	0	425	331	383	422	404	393	747	221	72	61	71	62	72	-0.032	8.56	0
204	32.772	32.686	0.16	0.16	1.26	82	3.16	0.99	82	1.6	77	0.178	100	99	2.5	0	423	332	382	421	404	392	745	219	72	61	71	62	72	-0.034	8.53	0
205	32.933	32.847	0.16	0.16	1.26	82	3.15	0.99	82	1.6	77	0.179	100	100	2.5	0	421	333	382	421	403	392	742	219	72	61	71	62	72	-0.034	8.49	0
206	33.094	33.007	0.16	0.16	1.26	82	3.15	0.99	82	1.6	78	0.178	100	99	2.4	-0.1	419	333	381	420	403	391	740	218	72	61	71	62	72	-0.033	8.45	0.01
207	33.254	33.167	0.16	0.16	1.26	82	3.16	0.99	82	1.6	78	0.179	99	99	2.4	0	416	334	381	420	402	391	737	217	72	61	71	62	72	-0.032	8.31	0
208	33.415	33.328	0.16	0.16	1.26	82	3.15	0.99	82	1.6	77	0.178	100	100	2.4	0	414	334	380	419	402	390	735	217	72	61	71	62	72	-0.032	8.27	0
209	33.575	33.488	0.16	0.16	1.26	82	3.14	0.99	82	1.6	77	0.177	99	100	2.4	0	412	335	379	419	401	389	733	216	72	61	71	62	72	-0.031	8.25	0
210	33.737	33.648	0.16	0.16	1.26	82	3.16	0.99	82	1.6	77	0.177	101	100	2.4	0	410	335	379	418	400	388	731	215	72	61	71	62	72	-0.031	8.26	0
211	33.898	33.810	0.16	0.16	1.26	82	3.15	0.99	82	1.6	77	0.178	100	101	2.3	-0.1	409	335	379	418	400	388	729	215	72	61	71	62	72	-0.031	8.3	0.01
212	34.058	33.970	0.16	0.16	1.26	82	3.16	0.99	82	1.6	77	0.177	99	100	2.3	0	407	336	378	417	399	387	727	214	72	61	71	62	72	-0.030	8.24	0.01
213	34.218	34.130	0.16	0.16	1.26	82	3.15	0.99	82	1.6	77	0.179	99	99	2.3	0	406	337	378	416	399	387	726	213	72	61	71	62	72	-0.031	8.28	0.01
214	34.379	34.291	0.16	0.16	1.26	83	3.15	0.99	82	1.6	77	0.178	100	100	2.3	0	404	337	378	416	398	387	725	212	72	61	71	62	72	-0.031	8.19	0
215	34.540	34.451	0.16	0.16	1.26	82	3.15	0.98	82	1.6	77	0.180	99	99	2.2	-0.1	403	338	377	415	398	386	724	212	72	61	71	62	72	-0.031	8.24	0
216	34.701	34.611	0.16	0.16	1.26	83	3.15	0.99	82	1.6	77	0.178	100	99	2.2	0	401	338	376	415	398	386	722	211	72	61	71	62	72	-0.031	8.25	0
217	34.862	34.772	0.16	0.16	1.25	83	3.15	0.99	82	1.6	77	0.178	100	100	2.2	0	400	338	376	414	397	385	721	211	72	61	71	62	72	-0.030	8.23	0
218	35.022	34.933	0.16	0.16	1.26	83	3.15	0.99	82	1.6	77	0.180	98	99	2.2	0	399	339	376	413	397	385	719	210	72	61	71	62	72	-0.031	8.18	0
219	35.183	35.093	0.16	0.16	1.26	83	3.15	0.99	82	1.6	77	0.177	100	100	2.2	0	397	339	376	413	396	384	718	210	72	61	71	62	72	-0.031	8.18	0
220	35.344	35.253	0.16	0.16	1.26	83	3.15	0.99	82	1.6	77	0.177	100	100	2.1	-0.1	396	340	376	412	396	384	716	209	72	61	71	62	72	-0.031	8.13	0
221	35.505	35.414	0.16	0.16	1.26	83	3.15	0.98	82	1.6	77	0.180	99	99	2.1	0	395	340	376	412	395	384	713	208	72	61	71	62	72	-0.031	8.13	0

Wood Heater Test Data

u

Run: 6

Manufacturer: Kuma Stoves
Model: K-251
Tracking No.: 2464
Project No.: 0123WM014E
Test Date: 09-May-23
Beginning Clock Time: 11:12

Total Sampling Time: 388 min
Recording Interval: 1 min
Tunnel Diameter: 6
Background Sample Volume: 58.621 cubic feet

PM Control Modules: 335,336
Dilution Tunnel MW(dry): 29.00 lb/lb-mole
Dilution Tunnel MW(wet): 28.78 lb/lb-mole
Dilution Tunnel H2O: 2.00 percent
Dilution Tunnel Static: -0.500 "H2O
Tunnel Area: 0.19635 ft2
Pitot Tube Cp: 0.99

Avg. Tunnel Velocity: 24.90 ft/sec.
Initial Tunnel Flow: 284.9 scfm
Average Tunnel Flow: 282.6 scfm
Post-Test Leak Check (1st Hr): 0.001 cfm @ 3 in. Hg
Post-Test Leak Check (1): 0.002 cfm @ 3 in. Hg
Post-Test Leak Check (2): 0.000 cfm @ 5 in. Hg
Average Test Piece Fuel Moisture: 20.37 Dry Basis %

Technician Signature:_____

Export to PDF

Meter Box Y Factor: 1.007 (1) 1.015 (2) 1.012 (Amb)

Barometric Pressure:

Begin	Middle	End	Average
30.14	30.09	30.03	30.09

Room Air Velocity, fpn
<50

OMNI Equipment Numbers: _____

Velocity Traverse Data

	Pt.1	Pt.2	Pt.3	Pt.4	Pt.5	Pt.6	Pt.7	Pt.8	Center	
Initial dP	0.132	0.164	0.158	0.112	0.106	0.166	0.170	0.130	0.181	"H2O
Temp:	80	80	80	80	80	80	80	80	80	°F

V_{strav} 25.11 ft/sec V_{scent} 28.43 ft/sec F_p 0.883

qwq

	Particulate Sampling Data														Fuel Weight (lb)		Temperature Data (°F)													Stack Gas Data		
Elapsed Time (min)	Gas Meter 1 (ft^3)	Gas Meter 2 (ft^3)	Sample Rate 1 (cfm)	Sample Rate 2 (cfm)	Orifice dH 1 ("H_2O)	Meter 1 Temp (°F)	Meter 1 Vacuum ("Hg)	Orifice dH 2 ("H_2O)	Meter 2 Temp (°F)	Meter 2 Vacuum ("Hg)	Dilution Tunnel (°F)	Dilution Tunnel Center dP	Pro. Rate 1	Pro. Rate 2	Scale Reading	Weight Change	Firebox Top	Firebox Bottom	Firebox Back	Firebox Left	Firebox Right	Avg. Stove Surface (Tot = ΔT)	Catalyst Exit	Stack	Filter 1	Dryer Exit 1	Filter 2	Dryer Exit 2	Ambient	Draft ("H_2O)	CO_2 (%)	CO (%)
222	35.666	35.574	0.16	0.16	1.25	83	3.15	0.99	82	1.6	77	0.177	100	100	2.1	0	393	341	375	411	395	383	711	207	72	61	71	62	72	-0.031	8.05	0
223	35.826	35.734	0.16	0.16	1.26	83	3.14	0.98	82	1.6	77	0.177	99	100	2.1	0	392	341	375	410	394	382	709	207	72	61	71	62	72	-0.031	8.08	0
224	35.986	35.896	0.16	0.16	1.26	83	3.15	0.98	82	1.6	77	0.178	99	101	2.1	0	391	341	375	410	394	382	707	207	72	61	71	62	72	-0.031	8.01	0
225	36.146	36.055	0.16	0.16	1.26	83	3.14	0.98	82	1.6	77	0.177	99	99	2.0	-0.1	390	342	375	409	393	382	706	206	72	61	71	62	72	-0.030	7.96	0
226	36.308	36.216	0.16	0.16	1.26	83	3.15	0.99	82	1.6	77	0.177	101	100	2.0	0	388	342	375	409	392	381	705	206	72	61	71	62	72	-0.030	7.91	0
227	36.468	36.377	0.16	0.16	1.25	83	3.15	0.99	82	1.6	77	0.177	99	100	2.0	0	387	343	375	408	392	381	703	206	72	61	71	62	72	-0.030	7.88	0
228	36.628	36.537	0.16	0.16	1.25	83	3.15	0.98	82	1.6	77	0.179	99	99	2.0	0	387	343	375	407	391	381	702	205	72	61	71	62	72	-0.030	7.92	0
229	36.788	36.697	0.16	0.16	1.26	83	3.15	0.98	82	1.6	77	0.178	99	99	2.0	0	386	343	375	407	391	380	701	204	72	61	71	62	72	-0.030	7.88	0.01
230	36.948	36.858	0.16	0.16	1.26	83	3.14	0.98	82	1.6	77	0.178	99	100	2.0	0	385	344	375	406	390	380	699	204	72	61	71	62	72	-0.030	7.9	0.01
231	37.110	37.018	0.16	0.16	1.26	83	3.15	0.98	82	1.6	77	0.177	101	100	1.9	-0.1	384	344	376	406	389	380	698	204	72	61	71	62	72	-0.030	7.95	0.01
232	37.270	37.178	0.16	0.16	1.25	83	3.15	0.98	82	1.6	77	0.179	99	99	1.9	0	383	344	376	405	389	379	697	204	72	61	71	62	72	-0.030	7.89	0.01
233	37.430	37.339	0.16	0.16	1.25	83	3.14	0.99	82	1.6	77	0.178	99	100	1.9	0	383	345	376	404	388	379	696	203	72	61	71	62	72	-0.030	7.92	0.01
234	37.590	37.500	0.16	0.16	1.25	83	3.14	0.99	82	1.6	77	0.179	99	100	1.9	0	382	346	376	404	388	379	695	203	72	61	71	62	72	-0.030	7.89	0.01
235	37.750	37.660	0.16	0.16	1.26	83	3.15	0.99	82	1.6	77	0.176	100	100	1.9	0	381	346	376	403	387	379	694	203	72	61	71	62	72	-0.030	7.92	0.01
236	37.912	37.820	0.16	0.16	1.25	83	3.15	0.98	82	1.6	77	0.178	100	99	1.8	-0.1	381	346	376	402	386	378	693	202	72	61	71	62	72	-0.030	7.76	0.01
237	38.072	37.981	0.16	0.16	1.25	83	3.14	0.98	82	1.6	77	0.179	99	100	1.8	0	380	346	376	402	386	378	692	202	72	61	71	62	72	-0.030	7.56	0.01
238	38.232	38.141	0.16	0.16	1.25	83	3.14	0.98	82	1.6	77	0.177	99	100	1.8	0	379	347	376	401	385	378	690	202	72	61	71	62	72	-0.030	7.53	0.01
239	38.392	38.301	0.16	0.16	1.26	83	3.15	0.98	82	1.6	77	0.177	99	100	1.8	0	379	347	376	401	384	377	687	201	72	61	71	62	72	-0.031	7.52	0.01
240	38.552	38.462	0.16	0.16	1.26	83	3.14	0.98	82	1.6	77	0.175	100	101	1.8	0	378	347	376	400	384	377	685	201	72	61	71	62	72	-0.031	7.55	0.01
241	38.714	38.622	0.16	0.16	1.25	83	3.15	0.98	82	1.6	77	0.177	101	100	1.8	0	377	348	376	399	383	377	683	201	72	61	71	62	72	-0.031	7.53	0.01
242	38.874	38.783	0.16	0.16	1.25	83	3.15	0.99	82	1.6	77	0.177	99	100	1.7	-0.1	376	348	375	399	382	376	682	201	72	61	71	62	72	-0.031	7.53	0.01
243	39.034	38.943	0.16	0.16	1.25	83	3.14	0.99	82	1.6	77	0.177	99	100	1.7	0	376	349	376	398	382	376	681	201	72	61	71	62	72	-0.031	7.55	0.02
244	39.194	39.104	0.16	0.16	1.26	83	3.14	0.99	82	1.6	77	0.178	99	100	1.7	0	375	349	375	397	381	375	679	200	72	61	71	62	72	-0.031	7.51	0.01
245	39.355	39.264	0.16	0.16	1.26	83	3.14	0.98	82	1.6	77	0.178	100	99	1.7	0	375	349	375	397	380	375	678	200	72	61	71	62	72	-0.030	7.57	0.02
246	39.516	39.424	0.16	0.16	1.26	83	3.14	0.99	82	1.6	77	0.179	99	99	1.7	0	374	349	375	396	379	375	677	200	72	61	71	62	72	-0.031	7.48	0.02
247	39.677	39.585	0.16	0.16	1.25	83	3.14	0.98	82	1.6	76	0.177	100	100	1.7	0	373	350	375	395	379	374	677	200	72	61	71	62	72	-0.031	7.41	0.01
248	39.836	39.745	0.16	0.16	1.25	83	3.14	0.98	82	1.6	76	0.178	98	99	1.7	0	373	350	375	395	378	374	676	200	72	61	71	62	72	-0.031	7.39	0.02
249	39.997	39.906	0.16	0.16	1.26	83	3.14	0.98	82	1.6	77	0.178	100	100	1.6	-0.1	372	350	375	394	377	374	674	200	72	61	71	62	72	-0.030	7.47	0.02
250	40.157	40.067	0.16	0.16	1.26	83	3.15	0.98	82	1.6	77	0.177	99	100	1.6	0	372	350	375	394	376	373	673	200	72	61	71	62	72	-0.031	7.5	0.02
251	40.319	40.227	0.16	0.16	1.25	83	3.14	0.98	82	1.6	77	0.180	100	99	1.7	0.1	371	350	375	393	376	373	672	199	72	61	71	62	72	-0.031	7.4	0.02
252	40.479	40.387	0.16	0.16	1.25	83	3.15	0.99	82	1.6	77	0.178	99	99	1.7	0	370	351	374	393	375	373	671	199	72	61	71	62	72	-0.031	7.42	0.02
253	40.639	40.548	0.16	0.16	1.25	83	3.15	0.98	82	1.6	76	0.178	99	100	1.6	-0.1	370	351	374	392	374	372	670	198	72	61	71	62	72	-0.030	7.32	0.02
254	40.799	40.708	0.16	0.16	1.25	83	3.14	0.98	82	1.6	77	0.178	99	99	1.6	0	369	351	374	391	374	372	669	198	72	61	71	62	72	-0.030	7.37	0.02
255	40.959	40.868	0.16	0.16	1.26	83	3.14	0.99	82	1.6	77	0.177	99	100	1.6	0	369	351	374	391	373	372	668	198	72	61	71	62	72	-0.030	7.31	0.02
256	41.121	41.029	0.16	0.16	1.26	83	3.14	0.98	82	1.6	77	0.179	100	100	1.6	0	368	351	374	390	372	371	668	198	72	61	71	62	72	-0.030	7.33	0.02
257	41.281	41.190	0.16	0.16	1.25	83	3.14	0.98	82	1.6	77	0.179	99	100	1.6	0	368	352	374	390	371	371	667	198	72	61	71	62	72	-0.030	7.27	0.02
258	41.441	41.350	0.16	0.16	1.26	83	3.15	0.99	82	1.6	77	0.179	99	99	1.6	0	367	352	374	389	370	370	666	198	72	61	71	62	72	-0.030	7.21	0.02
259	41.601	41.510	0.16	0.16	1.26	83	3.14	0.98	82	1.6	77	0.177	99	100	1.6	0	367	352	374	389	370	370	664	198	72	61	71	62	72	-0.027	7.24	0.02
260	41.762	41.671	0.16	0.16	1.25	83	3.14	0.98	82	1.6	77	0.179	99	100	1.5	-0.1	366	352	373	388	369	370	663	197	72	61	71	62	72	-0.028	7.22	0.03
261	41.923	41.831	0.16	0.16	1.26	83	3.15	0.98	82	1.6	77	0.176	100	100	1.6	0.1	366	353	373	387	368	369	662	197	72	61	71	62	72	-0.029	7.22	0.03
262	42.084	41.991	0.16	0.16	1.26	83	3.16	0.98	82	1.6	77	0.175	100	100	1.5	-0.1	365	353	373	387	368	369	662	197	72	61	71	62	72	-0.029	7.23	0.03
263	42.244	42.153	0.16	0.16	1.26	83	3.15	0.98	82	1.6	77	0.177	99	101	1.5	0	365	353	373	386	367	369	661	197	72	61	71	62	72	-0.029	7.23	0.02
264	42.404	42.313	0.16	0.16	1.26	83	3.14	0.98	82	1.6	76	0.176	99	100	1.5	0	364	353	373	386	366	368	660	196	72	61	71	62	72	-0.029	7.2	0.03
265	42.564	42.473	0.16	0.16	1.26	83	3.15	0.98	82	1.6	76	0.179	99	99	1.5	0	364	354	373	385	366	368	660	196	72	61	71	62	72	-0.029	7.21	0.03
266	42.726	42.635	0.16	0.16	1.26	83	3.14	0.98	82	1.6	77	0.178	100	101	1.5	0	363	354	373	385	365	368	659	196	72	61	71	62	72	-0.029	7.2	0.02

Wood Heater Test Data

u

Run: 6

Manufacturer: Kuma Stoves
Model: K-251
Tracking No.: 2464
Project No.: 0123WM014E
Test Date: 09-May-23
Beginning Clock Time: 11:12

Total Sampling Time: 388 min
Recording Interval: 1 min
Tunnel Diameter: 6
Background Sample Volume: 58.621 cubic feet

PM Control Modules: 335,336
Dilution Tunnel MW(dry): 29.00 lb/lb-mole
Dilution Tunnel MW(wet): 28.78 lb/lb-mole
Dilution Tunnel H2O: 2.00 percent
Dilution Tunnel Static: -0.500 "H2O
Tunnel Area: 0.19635 ft2
Pitot Tube Cp: 0.99

Avg. Tunnel Velocity: 24.90 ft/sec.
Initial Tunnel Flow: 284.9 scfm
Average Tunnel Flow: 282.6 scfm
Post-Test Leak Check (1st Hr): 0.001 cfm @ 3 in. Hg
Post-Test Leak Check (1): 0.002 cfm @ 3 in. Hg
Post-Test Leak Check (2): 0.000 cfm @ 5 in. Hg
Average Test Piece Fuel Moisture: 20.37 Dry Basis %

Technician Signature:_____

Meter Box Y Factor: 1.007 (1) 1.015 (2) 1.012 (Amb)

Export to PDF

Barometric Pressure:

Begin	Middle	End	Average
30.14	30.09	30.03	30.09

Room Air Velocity, fpm
<50

OMNI Equipment Numbers: _____

Velocity Traverse Data

	Pt.1	Pt.2	Pt.3	Pt.4	Pt.5	Pt.6	Pt.7	Pt.8	Center	
Initial dP	0.132	0.164	0.158	0.112	0.106	0.166	0.170	0.130	0.181	"H2O
Temp:	80	80	80	80	80	80	80	80	80	°F

V_{strav} 25.11 ft/sec V_{scent} 28.43 ft/sec F_p 0.883

qwq

	Particulate Sampling Data														Fuel Weight (lb)		Temperature Data (°F)													Stack Gas Data		
Elapsed Time (min)	Gas Meter 1 (ft^3)	Gas Meter 2 (ft^3)	Sample Rate 1 (cfm)	Sample Rate 2 (cfm)	Orifice dH 1 ("H_2O)	Meter 1 Temp (°F)	Meter 1 Vacuum ("Hg)	Orifice dH 2 ("H_2O)	Meter 2 Temp (°F)	Meter 2 Vacuum ("Hg)	Dilution Tunnel (°F)	Dilution Tunnel Center dP	Pro. Rate 1	Pro. Rate 2	Scale Reading	Weight Change	Firebox Top	Firebox Bottom	Firebox Back	Firebox Left	Firebox Right	Avg. Stove Surface (Tot = ΔT)	Catalyst Exit	Stack	Filter 1	Dryer Exit 1	Filter 2	Dryer Exit 2	Ambient	Draft ("H_2O)	CO_2 (%)	CO (%)
267	42.886	42.794	0.16	0.16	1.26	83	3.15	0.98	82	1.6	77	0.178	99	99	1.4	-0.1	363	354	373	384	364	368	658	196	72	61	71	62	72	-0.029	7.18	0.03
268	43.046	42.954	0.16	0.16	1.25	83	3.15	0.98	82	1.6	77	0.174	100	100	1.4	0	362	354	373	384	364	367	657	196	72	61	71	62	72	-0.029	7.19	0.03
269	43.206	43.115	0.16	0.16	1.25	83	3.15	0.98	82	1.6	77	0.178	99	100	1.4	0	362	355	373	383	363	367	656	196	72	61	71	62	72	-0.029	7.13	0.03
270	43.367	43.276	0.16	0.16	1.25	83	3.15	0.98	82	1.6	77	0.176	100	100	1.4	0	361	355	373	382	362	367	655	196	72	61	71	62	72	-0.029	7.18	0.03
271	43.528	43.436	0.16	0.16	1.26	83	3.14	0.98	82	1.6	77	0.176	100	100	1.4	0	361	355	372	382	362	366	654	196	72	61	71	62	72	-0.028	7.1	0.03
272	43.689	43.597	0.16	0.16	1.26	83	3.15	0.98	82	1.6	77	0.177	100	100	1.4	0	360	356	373	381	361	366	653	196	72	61	71	62	72	-0.028	7.16	0.03
273	43.849	43.757	0.16	0.16	1.25	83	3.15	0.98	82	1.6	77	0.179	99	99	1.4	0	360	356	373	381	360	366	652	196	72	61	71	62	72	-0.029	7.1	0.02
274	44.009	43.917	0.16	0.16	1.25	83	3.15	0.98	82	1.6	77	0.178	99	99	1.4	0	359	356	373	380	360	366	651	195	72	61	71	62	72	-0.029	7.04	0.02
275	44.170	44.078	0.16	0.16	1.26	83	3.15	0.98	82	1.6	77	0.175	100	101	1.3	-0.1	359	357	372	380	359	365	650	195	72	61	71	62	72	-0.029	6.94	0.02
276	44.331	44.239	0.16	0.16	1.26	83	3.15	0.98	82	1.6	77	0.178	100	100	1.3	0	358	357	373	379	358	365	649	195	72	61	71	62	72	-0.029	7	0.03
277	44.491	44.399	0.16	0.16	1.25	83	3.15	0.99	82	1.6	77	0.176	100	100	1.3	0	358	357	373	379	358	365	648	194	72	61	71	62	72	-0.029	6.9	0.03
278	44.652	44.559	0.16	0.16	1.25	83	3.14	0.99	82	1.6	77	0.175	100	100	1.3	0	357	358	373	378	357	365	647	194	72	61	71	62	72	-0.029	7.05	0.03
279	44.812	44.721	0.16	0.16	1.25	83	3.14	0.98	82	1.6	77	0.178	99	101	1.3	0	356	358	373	378	356	364	646	194	72	61	71	62	72	-0.029	7.05	0.02
280	44.972	44.880	0.16	0.16	1.26	83	3.14	0.98	82	1.6	77	0.177	99	99	1.3	0	355	358	373	377	356	364	645	194	72	61	71	62	72	-0.030	7.01	0.02
281	45.133	45.041	0.16	0.16	1.25	83	3.15	0.98	82	1.6	77	0.177	100	100	1.3	0	355	359	372	377	355	364	644	193	72	61	71	62	72	-0.030	6.96	0.02
282	45.294	45.202	0.16	0.16	1.26	83	3.15	0.98	82	1.6	77	0.178	100	100	1.3	0	354	359	372	376	355	363	643	193	72	61	71	62	72	-0.030	6.92	0.03
283	45.454	45.362	0.16	0.16	1.25	83	3.14	0.98	82	1.6	76	0.178	99	99	1.3	0	354	359	372	376	354	363	643	193	72	61	71	62	72	-0.030	6.92	0.02
284	45.614	45.522	0.16	0.16	1.25	83	3.14	0.98	82	1.6	76	0.180	98	99	1.3	0	353	359	371	375	354	362	642	193	72	61	71	62	72	-0.030	7	0.02
285	45.775	45.683	0.16	0.16	1.25	83	3.15	0.98	83	1.6	77	0.177	100	100	1.3	0	353	360	372	375	353	363	641	192	72	61	71	62	72	-0.029	6.98	0.02
286	45.935	45.844	0.16	0.16	1.25	83	3.14	0.98	82	1.6	77	0.177	99	100	1.2	-0.1	353	360	371	374	353	362	641	193	72	61	71	62	72	-0.030	7.02	0.02
287	46.096	46.003	0.16	0.16	1.25	83	3.14	0.98	82	1.6	77	0.178	100	99	1.2	0	352	360	371	374	353	362	640	192	72	61	71	62	72	-0.030	7.08	0.02
288	46.257	46.164	0.16	0.16	1.25	83	3.15	0.98	82	1.6	77	0.177	100	100	1.2	0	351	361	371	373	352	362	639	192	72	61	71	62	72	-0.029	7.05	0.01
289	46.417	46.325	0.16	0.16	1.25	83	3.15	0.98	82	1.6	77	0.180	98	99	1.2	0	351	361	371	373	352	362	638	192	72	61	71	62	72	-0.030	7.09	0.01
290	46.577	46.485	0.16	0.16	1.25	83	3.15	0.98	83	1.6	77	0.179	99	99	1.2	0	350	361	370	372	351	361	637	192	72	61	72	62	72	-0.030	7.05	0.01
291	46.738	46.646	0.16	0.16	1.26	83	3.15	0.98	83	1.6	77	0.177	100	100	1.2	0	350	362	370	372	351	361	635	191	72	61	72	62	72	-0.029	7.03	0.01
292	46.899	46.807	0.16	0.16	1.25	83	3.15	0.98	83	1.6	77	0.178	100	100	1.2	0	349	362	370	372	350	361	634	191	72	61	72	62	72	-0.029	6.84	0.01
293	47.059	46.966	0.16	0.16	1.25	83	3.15	0.98	83	1.6	77	0.177	99	99	1.2	0	348	362	370	371	350	360	632	191	72	61	72	62	72	-0.030	6.83	0.01
294	47.219	47.127	0.16	0.16	1.25	83	3.14	0.98	83	1.6	77	0.178	99	100	1.2	0	347	362	369	370	350	360	630	191	72	61	72	62	72	-0.029	6.79	0.01
295	47.379	47.288	0.16	0.16	1.25	83	3.15	0.98	83	1.6	77	0.175	100	101	1.1	-0.1	346	362	369	370	349	359	628	190	72	61	72	63	72	-0.029	6.79	0.01
296	47.540	47.448	0.16	0.16	1.26	83	3.15	0.98	83	1.6	77	0.178	100	99	1.1	0	345	362	369	369	349	359	627	190	72	61	72	62	72	-0.029	6.85	0.01
297	47.701	47.608	0.16	0.16	1.26	83	3.14	0.98	83	1.6	77	0.179	99	99	1.1	0	345	363	369	369	348	359	626	190	72	61	72	62	72	-0.029	6.86	0.01
298	47.862	47.769	0.16	0.16	1.25	83	3.15	0.98	83	1.6	77	0.178	100	100	1.1	0	344	363	369	368	348	358	625	190	72	61	72	62	72	-0.027	6.93	0.01
299	48.022	47.930	0.16	0.16	1.25	83	3.15	0.98	83	1.6	77	0.179	99	99	1.1	0	344	363	368	368	348	358	624	189	72	61	72	62	72	-0.027	6.92	0.01
300	48.182	48.089	0.16	0.16	1.25	83	3.14	0.98	83	1.6	76	0.177	99	99	1.1	0	343	363	368	367	347	358	623	189	72	61	72	63	72	-0.028	7	0.01
301	48.342	48.250	0.16	0.16	1.25	83	3.14	0.98	83	1.6	77	0.176	100	100	1.0	-0.1	342	363	368	366	347	357	622	189	72	61	72	63	72	-0.028	6.89	0.01
302	48.504	48.411	0.16	0.16	1.25	83	3.14	0.98	83	1.6	77	0.176	101	100	1.0	0	342	363	368	366	347	357	621	189	72	61	72	63	72	-0.028	6.99	0.01
303	48.664	48.571	0.16	0.16	1.25	83	3.15	0.98	83	1.6	77	0.177	99	99	1.0	0	341	364	368	365	347	357	619	189	72	61	72	63	72	-0.028	6.94	0.01
304	48.824	48.731	0.16	0.16	1.25	83	3.14	0.98	83	1.6	77	0.179	99	99	1.0	0	340	364	368	364	346	356	618	188	72	61	72	63	72	-0.026	7.07	0.01
305	48.984	48.893	0.16	0.16	1.25	83	3.14	0.98	83	1.6	77	0.178	99	100	1.0	0	340	364	368	364	346	356	618	188	72	61	72	63	72	-0.025	7.07	0.01
306	49.145	49.052	0.16	0.16	1.25	83	3.14	0.98	83	1.6	77	0.178	100	98	1.0	0	340	364	368	363	346	356	617	188	72	61	72	63	72	-0.025	7.31	0.02
307	49.306	49.213	0.16	0.16	1.25	83	3.15	0.98	83	1.6	77	0.179	99	99	1.0	0	339	364	368	362	345	356	618	188	72	61	72	63	72	-0.026	7.23	0.02
308	49.466	49.374	0.16	0.16	1.25	83	3.15	0.98	83	1.6	76	0.177	99	100	1.0	0	339	364	367	362	345	355	618	188	72	61	72	63	72	-0.026	7.18	0.02
309	49.626	49.534	0.16	0.16	1.25	83	3.15	0.98	83	1.6	77	0.178	99	99	1.0	0	339	365	367	361	345	355	618	188	72	61	72	63	72	-0.025	7.27	0.02
310	49.787	49.694	0.16	0.16	1.26	83	3.14	0.98	83	1.6	76	0.176	100	100	1.0	0	338	365	367	360	345	355	618	188	72	61	72	63	72	-0.026	7.28	0
311	49.947	49.855	0.16	0.16	1.25	83	3.14	0.98	83	1.6	76	0.177	99	100	0.9	-0.1	337	365	367	360	344	355	616	187	72	61	72	63	72	-0.025	7.31	0

Wood Heater Test Data

u

Run: 6

Manufacturer: Kuma Stoves
Model: K-251
Tracking No.: 2464
Project No.: 0123WM014E
Test Date: 09-May-23
Beginning Clock Time: 11:12

Total Sampling Time: 388 min
Recording Interval: 1 min
Tunnel Diameter: 6
Background Sample Volume: 58.621 cubic feet

PM Control Modules: 335,336
Dilution Tunnel MW(dry): 29.00 lb/lb-mole
Dilution Tunnel MW(wet): 28.78 lb/lb-mole
Dilution Tunnel H2O: 2.00 percent
Dilution Tunnel Static: -0.500 "H2O
Tunnel Area: 0.19635 ft2
Pitot Tube Cp: 0.99

Avg. Tunnel Velocity: 24.90 ft/sec.
Initial Tunnel Flow: 284.9 scfm
Average Tunnel Flow: 282.6 scfm
Post-Test Leak Check (1st Hr): 0.001 cfm @ 3 in. Hg
Post-Test Leak Check (1): 0.002 cfm @ 3 in. Hg
Post-Test Leak Check (2): 0.000 cfm @ 5 in. Hg
Average Test Piece Fuel Moisture: 20.37 Dry Basis %

Technician Signature:_____

Meter Box Y Factor: 1.007 (1) 1.015 (2) 1.012 (Amb)

Export to PDF

Barometric Pressure:

Begin	Middle	End	Average
30.14	30.09	30.03	30.09

Room Air Velocity, fpm
<50

OMNI Equipment Numbers: _____

Velocity Traverse Data

	Pt.1	Pt.2	Pt.3	Pt.4	Pt.5	Pt.6	Pt.7	Pt.8	Center	
Initial dP	0.132	0.164	0.158	0.112	0.106	0.166	0.170	0.130	0.181	"H2O
Temp:	80	80	80	80	80	80	80	80	80	°F

V_{strav} 25.11 ft/sec V_{scent} 28.43 ft/sec F_p 0.883

qwq

Elapsed Time (min)	Particulate Sampling Data: Gas Meter 1 (ft^3)	Gas Meter 2 (ft^3)	Sample Rate 1 (cfm)	Sample Rate 2 (cfm)	Orifice dH 1 ("H_2O)	Meter 1 Temp (°F)	Meter 1 Vacuum ("Hg)	Orifice dH 2 ("H_2O)	Meter 2 Temp (°F)	Meter 2 Vacuum ("Hg)	Dilution Tunnel (°F)	Dilution Tunnel Center dP	Pro. Rate 1	Pro. Rate 2	Fuel Weight (lb): Scale Reading	Weight Change	Temperature Data (°F): Firebox Top	Firebox Bottom	Firebox Back	Firebox Left	Firebox Right	Avg. Stove Surface (Tot = ΔT)	Catalyst Exit	Stack	Filter 1	Dryer Exit 1	Filter 2	Dryer Exit 2	Ambient	Stack Gas Data: Draft ("H_2O)	CO_2 (%)	CO (%)
312	50.109	50.016	0.16	0.16	1.26	83	3.14	0.98	83	1.6	76	0.177	100	100	0.9	0	336	365	366	359	344	354	615	187	72	61	72	63	72	-0.025	7.15	0
313	50.269	50.175	0.16	0.16	1.25	83	3.14	0.98	83	1.6	77	0.177	99	99	0.9	0	336	365	366	359	344	354	614	186	72	61	72	63	72	-0.025	7.18	0
314	50.429	50.336	0.16	0.16	1.25	83	3.14	0.98	83	1.6	76	0.179	99	99	0.9	0	335	365	365	358	344	353	613	186	72	61	72	63	72	-0.025	7.16	0
315	50.589	50.497	0.16	0.16	1.25	83	3.15	0.98	83	1.6	77	0.177	99	100	0.9	0	334	365	365	357	344	353	613	186	72	61	72	63	72	-0.025	7.09	0
316	50.749	50.657	0.16	0.16	1.25	83	3.14	0.98	83	1.6	77	0.178	99	99	0.9	0	334	366	364	357	344	353	612	185	72	61	72	63	72	-0.025	7.06	0
317	50.911	50.817	0.16	0.16	1.25	83	3.15	0.98	83	1.6	77	0.179	100	99	0.8	-0.1	333	366	364	356	344	353	612	185	72	61	72	63	72	-0.025	7.06	0
318	51.071	50.979	0.16	0.16	1.25	83	3.15	0.98	83	1.6	77	0.177	99	101	0.8	0	333	366	363	356	343	352	612	185	72	61	72	63	72	-0.025	6.98	0
319	51.231	51.138	0.16	0.16	1.25	83	3.14	0.98	83	1.6	76	0.179	99	98	0.9	0.1	332	367	363	355	343	352	612	185	72	61	72	63	72	-0.025	6.89	0
320	51.391	51.299	0.16	0.16	1.25	83	3.15	0.98	83	1.6	76	0.175	100	100	0.8	-0.1	332	367	362	355	343	352	612	185	72	61	72	63	72	-0.025	6.93	0
321	51.552	51.460	0.16	0.16	1.25	83	3.14	0.98	83	1.6	77	0.177	100	100	0.8	0	332	367	362	354	343	352	612	185	72	61	72	63	72	-0.025	6.93	0
322	51.713	51.620	0.16	0.16	1.25	83	3.14	0.98	83	1.6	76	0.177	100	99	0.8	0	331	368	362	354	343	352	612	185	72	61	72	63	72	-0.025	6.96	0
323	51.873	51.780	0.16	0.16	1.25	83	3.15	0.98	83	1.6	77	0.177	99	99	0.8	0	331	368	361	353	342	351	612	185	72	61	72	63	72	-0.025	6.97	0
324	52.034	51.941	0.16	0.16	1.24	83	3.15	0.98	83	1.6	77	0.177	100	100	0.8	0	331	369	360	353	342	351	612	185	72	61	72	63	72	-0.025	7	0
325	52.193	52.102	0.16	0.16	1.25	83	3.14	0.97	83	1.6	77	0.179	98	99	0.7	-0.1	330	369	360	352	342	351	612	184	72	61	72	63	72	-0.025	6.94	0
326	52.354	52.262	0.16	0.16	1.25	83	3.14	0.98	83	1.6	77	0.176	100	100	0.8	0.1	330	369	359	351	341	350	612	184	72	61	72	63	72	-0.025	6.87	0
327	52.515	52.422	0.16	0.16	1.25	83	3.15	0.98	83	1.6	77	0.176	100	100	0.7	-0.1	330	370	359	351	341	350	612	185	72	61	72	63	72	-0.025	6.87	0
328	52.676	52.583	0.16	0.16	1.25	83	3.15	0.98	83	1.6	77	0.179	99	99	0.7	0	330	370	359	350	341	350	612	185	72	61	72	63	72	-0.025	6.9	0
329	52.836	52.743	0.16	0.16	1.25	83	3.15	0.98	83	1.6	77	0.177	99	99	0.7	0	329	371	358	350	340	350	612	185	72	61	72	63	72	-0.025	6.92	0
330	52.996	52.903	0.16	0.16	1.25	83	3.15	0.98	83	1.6	77	0.178	99	99	0.7	0	329	371	358	349	340	349	612	184	72	61	72	63	72	-0.025	6.95	0
331	53.156	53.065	0.16	0.16	1.25	83	3.14	0.98	83	1.6	77	0.178	99	100	0.7	0	329	372	357	348	340	349	612	184	72	61	72	63	72	-0.025	6.98	0
332	53.317	53.224	0.16	0.16	1.25	83	3.14	0.98	83	1.6	77	0.176	100	99	0.7	0	329	372	357	348	340	349	612	184	72	61	72	63	72	-0.025	6.94	0
333	53.478	53.385	0.16	0.16	1.25	83	3.14	0.98	83	1.6	77	0.176	100	100	0.7	0	329	373	357	347	339	349	612	184	72	61	72	63	72	-0.025	7	0
334	53.638	53.546	0.16	0.16	1.25	83	3.14	0.98	83	1.6	77	0.177	99	100	0.6	-0.1	329	373	357	347	339	349	612	184	72	61	72	63	72	-0.025	7.03	0
335	53.798	53.706	0.16	0.16	1.25	83	3.14	0.98	83	1.6	77	0.175	100	100	0.6	0	329	374	357	346	339	349	612	184	72	61	72	63	72	-0.025	7.06	0
336	53.958	53.866	0.16	0.16	1.25	83	3.14	0.98	83	1.6	77	0.179	99	99	0.7	0.1	329	374	357	346	339	349	613	184	72	61	72	63	72	-0.025	7.05	0
337	54.120	54.027	0.16	0.16	1.26	83	3.14	0.98	83	1.6	77	0.176	101	100	0.7	0	329	375	357	345	339	349	613	184	72	61	72	63	72	-0.025	7.09	0
338	54.280	54.188	0.16	0.16	1.25	83	3.15	0.98	83	1.6	77	0.177	99	100	0.6	-0.1	329	375	357	344	338	349	613	185	72	61	72	63	72	-0.025	7.01	0
339	54.440	54.348	0.16	0.16	1.25	83	3.15	0.98	83	1.6	77	0.177	99	99	0.6	0	329	376	356	344	338	349	613	185	72	61	72	63	72	-0.025	6.89	0.01
340	54.601	54.508	0.16	0.16	1.25	83	3.15	0.98	83	1.6	77	0.177	100	99	0.6	0	329	376	356	343	338	348	613	185	72	61	72	63	72	-0.025	6.78	0.01
341	54.761	54.669	0.16	0.16	1.25	83	3.15	0.98	83	1.6	77	0.178	99	100	0.6	0	329	377	355	342	338	348	613	184	72	61	72	63	72	-0.025	6.67	0
342	54.922	54.829	0.16	0.16	1.25	83	3.15	0.98	83	1.6	77	0.179	99	99	0.6	0	329	377	355	342	338	348	612	184	72	61	72	63	72	-0.025	6.68	0
343	55.083	54.990	0.16	0.16	1.25	83	3.15	0.98	83	1.6	77	0.177	100	100	0.6	0	329	377	355	341	337	348	612	184	72	61	72	63	72	-0.025	6.41	0
344	55.243	55.151	0.16	0.16	1.25	83	3.15	0.98	83	1.6	77	0.180	98	99	0.5	-0.1	328	378	354	340	337	347	611	185	72	61	72	63	72	-0.025	6.39	0
345	55.403	55.311	0.16	0.16	1.25	83	3.14	0.98	83	1.6	77	0.179	99	99	0.5	0	328	378	354	340	337	347	610	184	72	61	72	63	72	-0.026	6.31	0
346	55.563	55.471	0.16	0.16	1.25	83	3.15	0.98	83	1.6	77	0.176	100	100	0.5	0	327	378	353	339	336	347	608	184	72	61	72	63	72	-0.025	6.31	0
347	55.724	55.632	0.16	0.16	1.26	83	3.14	0.98	83	1.6	77	0.178	100	100	0.5	0	327	379	352	338	336	346	607	184	72	61	72	63	72	-0.026	6.24	0
348	55.885	55.792	0.16	0.16	1.25	83	3.14	0.97	83	1.6	77	0.178	100	99	0.5	0	326	379	351	338	336	346	605	184	72	61	72	63	72	-0.026	6.29	0
349	56.045	55.952	0.16	0.16	1.24	83	3.15	0.98	83	1.6	77	0.180	98	99	0.5	0	326	379	350	337	335	345	604	184	72	61	72	63	72	-0.025	6.22	0
350	56.205	56.113	0.16	0.16	1.25	83	3.15	0.98	83	1.6	76	0.178	99	100	0.5	0	326	379	350	336	335	345	603	183	72	61	72	63	72	-0.026	6.16	0
351	56.366	56.274	0.16	0.16	1.25	83	3.15	0.97	83	1.6	77	0.177	100	100	0.4	-0.1	325	379	349	335	334	344	602	183	72	61	72	63	72	-0.025	6.16	0
352	56.526	56.434	0.16	0.16	1.25	83	3.14	0.98	83	1.6	77	0.178	99	99	0.4	0	325	379	348	335	334	344	601	183	72	61	72	63	72	-0.025	6.19	0
353	56.687	56.594	0.16	0.16	1.25	83	3.15	0.98	83	1.6	77	0.176	100	100	0.4	0	324	379	347	334	334	344	601	183	72	61	72	63	72	-0.025	6.17	0
354	56.848	56.755	0.16	0.16	1.24	83	3.15	0.98	83	1.6	77	0.178	100	100	0.4	0	324	380	346	333	333	343	600	183	72	61	72	63	72	-0.026	6.2	0
355	57.008	56.915	0.16	0.16	1.25	83	3.15	0.98	83	1.6	77	0.178	99	99	0.4	0	324	380	346	333	333	343	599	183	72	61	72	63	72	-0.025	6.15	0
356	57.168	57.076	0.16	0.16	1.25	83	3.15	0.98	83	1.6	77	0.178	99	100	0.4	0	323	380	345	332	332	342	598	182	72	61	72	63	72	-0.025	6.15	0

Wood Heater Test Data

u

Run: 6

Manufacturer: Kuma Stoves
Model: K-251
Tracking No.: 2464
Project No.: 0123WM014E
Test Date: 09-May-23
Beginning Clock Time: 11:12

Total Sampling Time: 388 min
Recording Interval: 1 min
Tunnel Diameter: 6
Background Sample Volume: 58.621 cubic feet

PM Control Modules: 335,336
Dilution Tunnel MW(dry): 29.00 lb/lb-mole
Dilution Tunnel MW(wet): 28.78 lb/lb-mole
Dilution Tunnel H2O: 2.00 percent
Dilution Tunnel Static: -0.500 "H2O
Tunnel Area: 0.19635 ft2
Pitot Tube Cp: 0.99

Avg. Tunnel Velocity: 24.90 ft/sec.
Initial Tunnel Flow: 284.9 scfm
Average Tunnel Flow: 282.6 scfm
Post-Test Leak Check (1st Hr): 0.001 cfm @ 3 in. Hg
Post-Test Leak Check (1): 0.002 cfm @ 3 in. Hg
Post-Test Leak Check (2): 0.000 cfm @ 5 in. Hg
Average Test Piece Fuel Moisture: 20.37 Dry Basis %

Technician Signature:_____

Export to PDF

Meter Box Y Factor: 1.007 (1) 1.015 (2) 1.012 (Amb)

Barometric Pressure:

Begin	Middle	End	Average
30.14	30.09	30.03	30.09

Room Air Velocity, fpn
<50

OMNI Equipment Numbers: _____

Velocity Traverse Data

	Pt.1	Pt.2	Pt.3	Pt.4	Pt.5	Pt.6	Pt.7	Pt.8	Center	
Initial dP	0.132	0.164	0.158	0.112	0.106	0.166	0.170	0.130	0.181	"H2O
Temp:	80	80	80	80	80	80	80	80	80	°F

V_{strav} 25.11 ft/sec V_{scent} 28.43 ft/sec F_p 0.883

qwq

	Particulate Sampling Data														Fuel Weight (lb)		Temperature Data (°F)													Stack Gas Data		
Elapsed Time (min)	Gas Meter 1 (ft^3)	Gas Meter 2 (ft^3)	Sample Rate 1 (cfm)	Sample Rate 2 (cfm)	Orifice dH 1 ("H_2O)	Meter 1 Temp (°F)	Meter 1 Vacuum ("Hg)	Orifice dH 2 ("H_2O)	Meter 2 Temp (°F)	Meter 2 Vacuum ("Hg)	Dilution Tunnel (°F)	Dilution Tunnel Center dP	Pro. Rate 1	Pro. Rate 2	Scale Reading	Weight Change	Firebox Top	Firebox Bottom	Firebox Back	Firebox Left	Firebox Right	Avg. Stove Surface (Tot = ΔT)	Catalyst Exit	Stack	Filter 1	Dryer Exit 1	Filter 2	Dryer Exit 2	Ambient	Draft ("H_2O)	CO_2 (%)	CO (%)
357	57.329	57.237	0.16	0.16	1.25	83	3.14	0.98	83	1.6	77	0.177	100	100	0.4	0	323	380	344	331	332	342	598	182	72	61	72	63	72	-0.025	6.11	0
358	57.490	57.397	0.16	0.16	1.25	83	3.14	0.98	83	1.6	77	0.177	100	99	0.4	0	322	380	343	330	331	341	597	182	72	61	72	63	72	-0.025	6.13	0
359	57.650	57.557	0.16	0.16	1.25	83	3.15	0.98	83	1.6	77	0.175	100	100	0.4	0	322	380	343	330	331	341	596	182	72	61	72	63	73	-0.025	6.08	0
360	57.810	57.718	0.16	0.16	1.25	83	3.15	0.98	83	1.6	77	0.176	100	100	0.3	-0.1	322	380	342	329	330	341	594	182	72	61	72	63	72	-0.025	5.89	0
361	57.970	57.879	0.16	0.16	1.25	83	3.14	0.98	83	1.6	77	0.177	99	100	0.3	0	321	380	341	329	330	340	593	181	72	61	72	63	72	-0.025	5.84	0
362	58.131	58.038	0.16	0.16	1.25	83	3.14	0.98	83	1.6	77	0.176	100	99	0.3	0	320	380	340	328	330	340	591	181	72	61	72	63	72	-0.025	5.84	0
363	58.292	58.200	0.16	0.16	1.25	83	3.15	0.98	83	1.6	77	0.178	100	100	0.3	0	320	380	340	327	329	339	589	181	72	61	72	63	72	-0.025	5.8	0
364	58.452	58.360	0.16	0.16	1.25	83	3.14	0.98	83	1.6	77	0.179	99	99	0.3	0	319	380	339	326	329	339	587	181	72	61	72	63	72	-0.025	5.83	0.01
365	58.612	58.520	0.16	0.16	1.25	84	3.15	0.98	83	1.6	77	0.177	99	99	0.3	0	319	381	338	326	328	338	586	181	72	61	72	63	72	-0.025	5.83	0.01
366	58.773	58.681	0.16	0.16	1.25	83	3.15	0.98	83	1.6	77	0.178	100	100	0.3	0	318	381	337	325	328	338	585	181	72	61	72	63	72	-0.025	5.87	0.01
367	58.933	58.842	0.16	0.16	1.25	84	3.15	0.98	83	1.6	77	0.177	99	100	0.3	0	317	381	337	324	327	337	584	181	72	61	72	63	72	-0.025	5.83	0.01
368	59.095	59.002	0.16	0.16	1.25	84	3.15	0.98	83	1.6	77	0.176	101	100	0.3	0	317	381	336	323	327	337	583	180	72	61	72	63	72	-0.025	5.91	0.01
369	59.255	59.162	0.16	0.16	1.25	84	3.15	0.98	83	1.6	77	0.177	99	99	0.3	0	316	381	335	323	326	336	582	180	72	61	72	63	73	-0.025	5.87	0.01
370	59.415	59.323	0.16	0.16	1.25	84	3.15	0.98	83	1.6	77	0.178	99	100	0.3	0	316	381	334	322	326	336	581	180	72	61	72	63	72	-0.025	5.9	0.01
371	59.575	59.483	0.16	0.16	1.25	84	3.15	0.98	83	1.6	77	0.178	99	99	0.3	0	316	381	334	321	325	335	581	180	72	61	72	63	72	-0.025	5.97	0
372	59.736	59.644	0.16	0.16	1.25	84	3.14	0.98	83	1.6	77	0.178	99	100	0.2	-0.1	315	381	333	321	325	335	580	179	72	61	72	63	72	-0.025	6	0
373	59.897	59.805	0.16	0.16	1.25	84	3.15	0.98	83	1.6	77	0.179	99	99	0.2	0	315	381	333	320	324	335	580	179	72	61	72	63	72	-0.025	5.97	0
374	60.057	59.965	0.16	0.16	1.24	84	3.14	0.97	83	1.6	76	0.177	99	99	0.2	0	314	381	332	319	324	334	579	179	73	61	72	63	72	-0.025	5.85	0
375	60.217	60.125	0.16	0.16	1.25	84	3.15	0.98	83	1.6	77	0.177	99	99	0.2	0	313	381	332	319	323	334	578	178	73	61	72	63	72	-0.025	5.91	0
376	60.377	60.286	0.16	0.16	1.25	84	3.15	0.98	83	1.6	77	0.177	99	100	0.2	0	313	381	331	318	323	333	576	178	72	61	72	63	73	-0.025	5.91	0
377	60.538	60.447	0.16	0.16	1.25	84	3.15	0.97	83	1.6	77	0.177	100	100	0.2	0	312	381	331	317	322	333	574	178	73	61	72	63	73	-0.024	5.96	0
378	60.700	60.607	0.16	0.16	1.25	84	3.16	0.98	83	1.6	77	0.175	101	100	0.2	0	311	381	330	317	322	332	573	177	73	61	72	63	73	-0.025	6.02	0
379	60.860	60.767	0.16	0.16	1.25	84	3.14	0.98	83	1.6	77	0.177	99	99	0.2	0	310	381	329	316	321	331	571	177	73	61	72	63	73	-0.024	6.03	0
380	61.020	60.928	0.16	0.16	1.25	84	3.14	0.98	83	1.6	77	0.177	99	100	0.1	-0.1	310	381	329	315	321	331	570	177	73	61	72	63	73	-0.025	6.07	0
381	61.180	61.088	0.16	0.16	1.25	84	3.15	0.98	83	1.6	77	0.178	99	99	0.1	0	309	381	328	315	320	331	569	177	73	61	72	63	73	-0.024	6.02	0
382	61.340	61.249	0.16	0.16	1.26	84	3.16	0.98	83	1.6	77	0.177	99	100	0.1	0	309	381	328	314	320	330	568	177	72	61	72	63	73	-0.025	6.04	0
383	61.502	61.410	0.16	0.16	1.25	84	3.14	0.98	83	1.6	77	0.177	100	100	0.1	0	308	381	328	314	320	330	568	177	73	61	72	63	73	-0.024	6.05	0
384	61.662	61.570	0.16	0.16	1.24	84	3.15	0.97	83	1.6	77	0.176	99	100	0.1	0	308	382	327	313	319	330	568	177	73	61	72	63	73	-0.025	6.11	0.01
385	61.822	61.730	0.16	0.16	1.25	84	3.15	0.98	83	1.6	77	0.179	99	99	0.1	0	308	382	327	312	319	330	568	176	73	61	72	63	73	-0.024	6.15	0.01
386	61.982	61.891	0.16	0.16	1.25	84	3.14	0.98	83	1.6	77	0.176	99	100	0.1	0	308	382	326	312	318	329	568	176	73	62	72	63	73	-0.024	6.2	0.01
387	62.143	62.051	0.16	0.16	1.25	84	3.14	0.98	83	1.6	77	0.176	100	100	0.1	0	308	382	326	311	318	329	568	177	73	61	72	63	73	-0.025	6.18	0.01
388	62.304	62.211	0.16	0.16	1.25	84	3.16	0.98	83	1.6	77	0.178	99	99	0.0	-0.1	308	382	326	311	318	329	569	177	73	62	72	63	73	-0.024	6.16	0.01

Wood Heater Lab Data - ASTM E2780 / ASTM E2515

Manufacturer: Kuma Stoves
Model: K-251
Tracking No.: 2464
Project No.: 0123WM014E
Run #: 6
Date: 5/9/23

Equipment Numbers:

TRAIN 1 (First Hour emissions)

Sample Component	Reagent	Filter, Probe or Dish #	Weights		
			Final, mg	Tare, mg	Particulate, mg
B. Front filter catch	Filter	E911	118.5	116.6	1.9
C. Rear filter catch	Filter	E912	115.6	115.6	0.0
D. Probe catch*	Probe	14	114546.8	114546.4	0.4
E. Filter seals catch*	Seals	S484	3317.5	3317.3	0.2

Sub-Total Total Particulate, mg: 2.5

TRAIN 1 (Post First Hour Change-out)

Sample Component	Reagent	Filter, Probe or Dish #	Weights		
			Final, mg	Tare, mg	Particulate, mg
B. Front filter catch	Filter	E913	119.3	117.4	1.9
C. Rear filter catch	Filter	E914	117.3	117.2	0.1
D. Probe catch*	Probe	71	117766.6	117766.1	0.5
E. Filter seals catch*	Seals	S485	3402.8	3402.8	0.0

Sub-Total Total Particulate, mg: 2.5

Train 1 Aggregate Total Particulate, mg: **5.0**

TRAIN 2

Sample Component	Reagent	Filter, Probe or Dish #	Weights		
			Final, mg	Tare, mg	Particulate, mg
A. Front filter catch	Filter	E915	120.8	117.0	3.8
B. Rear filter catch	Filter	E916	117.9	117.5	0.4
C. Probe catch*	Probe	82	116286.6	116286.5	0.1
D. Filter seals catch*	Seals	S486	3454.7	3454.7	0.0

Total Particulate, mg: **4.3**

AMBIENT

Sample Component	Reagent	Filter # or Probe #	Weights		
			Final, mg	Tare, mg	Particulate, mg
A. Front filter catch*	Filter	E917	115.9	115.8	0.1

Total Particulate, mg: **0.1**

*Particulate catch that results in a negative number, is assumed to be zero for probes and seals, negative numbers for filters are assumed to be part of the seal weight.

Component	Equations:
A. Front filter catch	Final (mg) - Tare (mg) = Particulate, mg
B. Rear filter catch	Final (mg) - Tare (mg) = Particulate, mg
C. Probe catch	Final (mg) - Tare (mg) = Particulate, mg

Technician Signature:_____

Wood Heater Test Results - ASTM E2780 / ASTM E2515

Manufacturer: Kuma Stoves
Model: K-251
Project No.: 0123WM014E
Tracking No.: 2464
Run: 6
Test Date: 05/09/23

Technician Signature:_____

Burn Rate	**1.04**	**kg/hr dry**
Average Tunnel Temperature	79	degrees Fahrenheit
Average Gas Velocity in Dilution Tunnel - vs	24.90	feet/second
Average Gas Flow Rate in Dilution Tunnel - Qsd	16956.9	dscf/hour
Average Delta p	0.178	inches H20
Total Time of Test	388	minutes

	AMBIENT		SAMPLE TRAIN 1		SAMPLE TRAIN 2		FIRST HOUR FILTER (TRAIN 1)	
Total Sample Volume - Vm	58.621	cubic feet	62.304	cubic feet	62.211	cubic feet	9.599	cubic feet
Average Gas Meter Temperature	72	degrees Fahrenheit	81	degrees Fahrenheit	81	degrees Fahrenheit	74	degrees Fahrenheit
Total Sample Volume (Standard Conditions) - Vmstd	59.237	dscf	61.746	dscf	62.123	dscf	9.630	dscf
Total Particulates - m_n	0.1	mg	5	mg	4.3	mg	2.5	mg
Particulate Concentration (dry-standard) - C_r/C_s	0.000002	grams/dscf	0.00008	grams/dscf	0.00007	grams/dscf	0.00026	grams/dscf
Total Particulate Emissions - E_T	0.19	grams	8.69	grams	7.40	grams	4.40	grams
Particulate Emission Rate	0.03	grams/hour	1.34	grams/hour	1.15	grams/hour	4.40	grams/hour
Emissions Factor			1.29	g/kg	1.10	g/kg	2.01	g/kg
Difference from Average Total Particulate Emissions			0.64	grams	0.64	grams		

Final Average Results		
Complete Test Run		
Total Particulate Emissions - E_T	8.05	grams
Particulate Emission Rate	**1.24**	**grams/hour**
Emissions Factor	1.19	grams/kg
First Hour Emissions		
Total Particulate Emissions - E_T	4.40	grams
Particulate Emission Rate	4.40	grams/hour
Emissions Factor	2.01	grams/kg
7.5% of Average Total Particulate Emissions	0.60	grams

Quality Checks	Requirement	Measured / Observed: First Hour	Train 1	Train 2	Complies?
Filter Temps, °F	< 90	71	73	72	OK
Filter Face Velocity, fpm	< 30	8.68	8.73	8.68	OK
Dryer Exit Temp, °F	< 80	57	62	63	OK
Leakage Rate, cfm < 4% of avg sample rate or < 0.01 cfm, lesser of the two	0.01	0.001	0.002	0.000	OK
Neg. Probe Weight	=> 0	0.4	0.5	0.1	OK
Pro-Rate Variation	< 90 for < 10% of θ	0.00%	0.00%	0.00%	OK
	> 110 for < 10% of θ	0.00%	0.00%	0.00%	OK
	# Readings < 80%	0	0	0	OK
	# Readings > 120%	0	0	0	OK
Ambient Temp, °F (min / max)	< 55	69			OK
	> 90	73			OK
Train Precision One of *A* or *B* must	(*A*) Within 7.5%	8.0%			OK
	(*B*) Within 0.5 g/kg	0.19			
Stove Surface ΔT	Within 125 °F	101			OK
Room Air Velocity	< 50 fpm	<50			OK

Wood Heater Lab Data - ASTM E2780 / ASTM E2515

Manufacturer: Kuma Stoves
Model: K-251
Tracking No.: 2464
Project No.: 0123WM014E
Run #: 6
Date: 5/9/23

Equipment Numbers:

Uncorrected

TRAIN 1 (First Hour emissions)

Sample Component	Reagent	Filter, Probe or Dish #	Weights		
			Final, mg	Tare, mg	Particulate, mg
B. Front filter catch	Filter	E911	118.5	116.6	1.9
C. Rear filter catch	Filter	E912	115.6	115.6	0.0
D. Probe catch*	Probe	14	114546.8	114546.4	0.4
E. Filter seals catch*	Seals	S484	3317.5	3317.3	0.2

Sub-Total Total Particulate, mg: 2.5

TRAIN 1 (Post First Hour Change-out)

Sample Component	Reagent	Filter, Probe or Dish #	Weights		
			Final, mg	Tare, mg	Particulate, mg
B. Front filter catch	Filter	E913	119.3	117.4	1.9
C. Rear filter catch	Filter	E914	117.3	117.2	0.1
D. Probe catch*	Probe	71	117766.6	117766.1	0.5
E. Filter seals catch*	Seals	S485	3402.8	3402.8	0.0

Sub-Total Total Particulate, mg: 2.5

Train 1 Aggregate Total Particulate, mg: **5.0**

TRAIN 2

Sample Component	Reagent	Filter, Probe or Dish #	Weights		
			Final, mg	Tare, mg	Particulate, mg
A. Front filter catch	Filter	E915	120.8	117.0	3.8
B. Rear filter catch	Filter	E916	117.9	117.5	0.4
C. Probe catch*	Probe	82	116286.6	116286.5	0.1
D. Filter seals catch*	Seals	S486	3454.7	3454.7	0.0

Total Particulate, mg: **4.3**

AMBIENT

Sample Component	Reagent	Filter # or Probe #	Weights		
			Final, mg	Tare, mg	Particulate, mg
A. Front filter catch*	Filter	E917	115.9	115.8	0.1

Total Particulate, mg: **0.1**

*Particulate catch that results in a negative number, is assumed to be zero for probes and seals, negative numbers for filters are assumed to be part of the seal weight.

Component	Equations:
A. Front filter catch	Final (mg) - Tare (mg) = Particulate, mg
B. Rear filter catch	Final (mg) - Tare (mg) = Particulate, mg
C. Probe catch	Final (mg) - Tare (mg) = Particulate, mg

Technician Signature:_____

Wood Heater Test Results - ASTM E2780 / ASTM E2515

Manufacturer: Kuma Stoves
Model: K-251
Project No.: 0123WM014E
Tracking No.: 2464
Run: 6
Test Date: 05/09/23

Technician Signature:_____

Uncorrected

Burn Rate	**1.04**	**kg/hr dry**
Average Tunnel Temperature	79	degrees Fahrenheit
Average Gas Velocity in Dilution Tunnel - vs	24.90	feet/second
Average Gas Flow Rate in Dilution Tunnel - Qsd	16956.9	dscf/hour
Average Delta p	0.178	inches H20
Total Time of Test	388	minutes

	AMBIENT		SAMPLE TRAIN 1		SAMPLE TRAIN 2		FIRST HOUR FILTER (TRAIN 1)	
Total Sample Volume - Vm	58.621	cubic feet	62.304	cubic feet	62.211	cubic feet	9.599	cubic feet
Average Gas Meter Temperature	72	degrees Fahrenheit	81	degrees Fahrenheit	81	degrees Fahrenheit	74	degrees Fahrenheit
Total Sample Volume (Standard Conditions) - Vmstd	59.237	dscf	61.746	dscf	62.123	dscf	9.630	dscf
Total Particulates - m_n	0.1	mg	5	mg	4.3	mg	2.5	mg
Particulate Concentration (dry-standard) - C_r/C_s	0.000002	grams/dscf	0.00008	grams/dscf	0.00007	grams/dscf	0.00026	grams/dscf
Total Particulate Emissions - E_T	0.19	grams	8.69	grams	7.40	grams	4.40	grams
Particulate Emission Rate	0.03	grams/hour	1.34	grams/hour	1.15	grams/hour	4.40	grams/hour
Emissions Factor			1.29	g/kg	1.10	g/kg	2.01	g/kg
Difference from Average Total Particulate Emissions			0.64	grams	0.64	grams		

Final Average Results		
Complete Test Run		
Total Particulate Emissions - E_T	8.05	grams
Particulate Emission Rate	**1.24**	**grams/hour**
Emissions Factor	1.19	grams/kg
First Hour Emissions		
Total Particulate Emissions - E_T	4.40	grams
Particulate Emission Rate	4.40	grams/hour
Emissions Factor	2.01	grams/kg
7.5% of Average Total Particulate Emissions	0.60	grams

Quality Checks	Requirement	Measured / Observed: First Hour	Train 1	Train 2	Complies?
Filter Temps, °F	< 90	71	73	72	OK
Filter Face Velocity, fpm	< 30	8.68	8.73	8.68	OK
Dryer Exit Temp, °F	< 80	57	62	63	OK
Leakage Rate, cfm < 4% of avg sample rate or < 0.01 cfm, lesser of the two	0.01	0.001	0.002	0.000	OK
Neg. Probe Weight	=> 0	0.4	0.5	0.1	OK
Pro-Rate Variation	< 90 for < 10% of θ	0.00%	0.00%	0.00%	OK
	> 110 for < 10% of θ	0.00%	0.00%	0.00%	OK
	# Readings < 80%	0	0	0	OK
	# Readings > 120%	0	0	0	OK
Ambient Temp, °F (min / max)	< 55	69			OK
	> 90	73			OK
Train Precision One of *A* or *B* must	(*A*) Within 7.5%	8.0%			OK
	(*B*) Within 0.5 g/kg	0.19			
Stove Surface ΔT	Within 125 °F	101			OK
Room Air Velocity	< 50 fpm	<50			OK

VERSION:	2.4	4/15/2010			
Manufacturer:	Kuma Stoves		Appliance Type:	Cat	(Cat, Non-Cat, Pellet)
Model:	K-251				
Date:	5/9/2023		Temp. Units	F	(F or C)
Run:	6		Weight Units	lb	(kg or lb)
Control #:	2464				
Test Duration:	388				
Output Category:	II		Fuel Data		
				D. Fir	
Wood Moisture (% wet):	16.92		HHV	19,810	kJ/kg
Load Weight (lb wet):	17.90		%C	48.73	
Burn Rate (dry kg/h):	1.04		%H	6.87	
Total Particulate Emissions:	8.05 g		%O	43.9	
			%Ash	0.5	

Default Fuel Values

	D. Fir	Oak
HHV (kJ/kg)	19,810	19,887
%C	48.73	50
%H	6.87	6.6
%O	43.9	42.9
%Ash	0.5	0.5

Note 1: For other fuels, use the heating value and fuel composition determined by analysis of fuel sample in accordance with Clause 9.2.

Note 2: In cases where the "Fuel Weight Remaining" is the same for three or more readings in a row, a "divide by zero error" will occur in the calculation sheet. In such cases, adjust the weight values by interpolation between the first occurence and the next reading showing a decrease in weight.

	Averages	0.10	9.32	#DIV/0!	253.67	71.51
					Temp. (ºF)	
Elapsed Time (min)	Fuel Weight Remaining (lb)	Flue Gas Composition (%) CO	CO_2	O_2	Flue Gas	Room Temp
0	17.90	0.58	1.20		376.0	70.0
1	17.80	0.26	1.50		364.0	70.0
2	17.60	0.88	3.11		322.0	70.0
3	17.50	0.45	6.75		313.0	70.0
4	17.40	0.02	7.45		299.0	70.0
5	17.40	0.03	8.43		297.0	70.0
6	17.30	0.03	8.73		300.0	69.0
7	17.30	0.03	8.80		305.0	69.0
8	17.20	0.04	9.04		308.0	70.0
9	17.20	0.03	8.90		311.0	69.0
10	17.10	0.02	8.75		314.0	69.0
11	17.00	0.03	9.19		316.0	69.0
12	16.90	0.02	8.81		318.0	69.0
13	16.90	0.01	8.74		318.0	69.0
14	16.80	0.00	8.39		319.0	69.0
15	16.70	0.00	8.46		318.0	69.0
16	16.60	0.00	8.69		319.0	69.0
17	16.50	0.01	9.53		323.0	69.0
18	16.40	0.08	10.75		328.0	69.0

19	16.20	0.02	9.47		329.0	69.0
20	16.10	0.02	9.27		331.0	69.0
21	16.10	0.03	9.80		332.0	69.0
22	16.00	0.02	9.37		332.0	69.0
23	16.00	0.05	9.34		331.0	69.0
24	15.90	0.06	9.72		332.0	69.0
25	15.80	0.02	9.70		333.0	69.0
26	15.70	0.05	9.76		332.0	69.0
27	15.60	0.07	10.09		333.0	69.0
28	15.60	0.12	10.86		337.0	69.0
29	15.50	0.21	12.84		341.0	69.0
30	15.40	0.10	12.17		343.0	69.0
31	15.30	0.05	11.91		342.0	69.0
32	15.10	0.16	12.69		345.0	69.0
33	15.00	0.37	13.53		347.0	69.0
34	14.90	0.17	13.29		347.0	69.0
35	14.80	0.30	12.99		347.0	69.0
36	14.60	0.60	13.80		351.0	69.0
37	14.50	0.74	13.77		353.0	69.0
38	14.40	0.82	13.70		355.0	69.0
39	14.30	0.87	13.44		356.0	70.0
40	14.20	0.83	12.51		358.0	70.0
41	14.10	0.98	13.90		359.0	69.0
42	14.00	0.70	14.14		360.0	70.0
43	13.80	0.77	14.10		360.0	70.0
44	13.70	0.64	13.82		359.0	70.0
45	13.60	0.39	13.86		359.0	70.0
46	13.50	0.30	14.05		359.0	70.0
47	13.30	0.37	14.16		358.0	70.0
48	13.20	0.40	14.22		358.0	70.0
49	13.10	0.36	14.09		358	70
50	13.00	0.29	14.14		357	70
51	12.90	0.21	14.13		356	70
52	12.70	0.15	14.04		355	70
53	12.50	0.13	13.77		353	70
54	12.40	0.12	13.8		352	70
55	12.30	0.09	13.97		352	70
56	12.20	0.14	13.92		350	70
57	12.10	0.2	13.95		351	70

58	12.00	0.26	13.95		352	70
59	11.90	0.23	13.95		352	70
60	11.70	0.24	14.08		353	70
61	11.60	0.22	13.88		351	70
62	11.60	0.27	13.95		351	70
63	11.50	0.34	14.19		351	70
64	11.30	0.47	14.11		352	70
65	11.20	0.51	14.28		353	70
66	11.10	0.68	14.44		353	70
67	11.00	0.6	14.38		353	70
68	11.00	0.48	14.47		354	70
69	10.80	0.45	14.3		353	70
70	10.70	0.69	14.31		352	70
71	10.60	0.65	14.11		353	71
72	10.50	0.76	14.19		352	71
73	10.30	0.86	14.3		352	71
74	10.20	0.85	14.35		351	71
75	10.10	0.66	14.12		348	71
76	10.00	0.77	14.01		347	71
77	9.90	0.83	13.98		346	71
78	9.70	0.56	14.03		345	71
79	9.60	0.5	13.77		343	71
80	9.50	0.32	13.67		342	71
81	9.40	0.28	13.69		340	71
82	9.30	0.24	13.64		337	71
83	9.20	0.15	13.55		336	71
84	9.10	0.06	13.57		334	71
85	9.00	0.03	13.52		332	71
86	8.90	0.02	13.19		332	71
87	8.80	0.02	13.11		331	71
88	8.70	0.01	12.97		329	71
89	8.60	0.01	12.93		328	71
90	8.50	0.01	12.87		326	71
91	8.50	0	12.81		325	71
92	8.40	0.01	12.73		323	71
93	8.30	0	12.78		322	71
94	8.20	0.02	12.81		321	71
95	8.10	0.01	12.66		321	72
96	8.00	0	12.49		319	72

97	7.90	0	12.14		317	71
98	7.90	0	11.9		317	71
99	7.70	0.01	11.78		316	72
100	7.60	0.01	11.64		315	71
101	7.60	0.01	11.51		313	72
102	7.50	0.01	11.6		312	71
103	7.40	0.01	11.69		311	71
104	7.30	0.01	11.51		311	72
105	7.20	0.01	11.42		310	72
106	7.10	0	11.64		308	71
107	7.10	0	11.56		307	72
108	7.00	0	11.58		306	72
109	7.00	0	11.53		305	72
110	6.90	0.12	12.01		302	72
111	6.80	0.21	12.91		304	72
112	6.70	0.24	13.3		308	72
113	6.70	0.32	13.81		311	72
114	6.70	0.53	14.05		316	72
115	6.60	0.7	14.43		320	72
116	6.50	0.89	14.35		323	72
117	6.40	0.95	14.36		326	72
118	6.30	0.9	14.24		327	72
119	6.20	0.72	14.25		328	72
120	6.20	0.27	13.75		330	72
121	6.10	0.49	13.9		330	71
122	6.00	0.4	14		330	72
123	5.90	0.35	13.66		330	72
124	5.70	0.32	13.54		330	72
125	5.60	0.32	13.38		329	72
126	5.60	0.49	13.53		333	72
127	5.70	0.07	11.85		336	72
128	5.70	0.06	11.67		333	72
129	5.60	0.06	11.97		330	72
130	5.60	0.04	11.75		326	72
131	5.50	0.04	11.69		322	72
132	5.50	0.04	11.69		320	72
133	5.40	0.04	11.7		316	72
134	5.30	0.05	11.54		314	72
135	5.20	0.04	11.37		312	72

136	5.10	0.05	11.26		310	72
137	5.00	0.05	11.14		308	72
138	5.00	0.05	11.02		306	72
139	4.90	0.05	11.12		303	72
140	4.80	0.05	11.03		301	72
141	4.80	0.05	10.8		298	72
142	4.70	0.05	10.82		296	72
143	4.60	0.05	10.81		294	72
144	4.60	0.05	10.8		293	72
145	4.50	0.05	10.68		292	72
146	4.50	0.05	10.59		290	72
147	4.40	0.04	10.71		287	72
148	4.40	0.05	10.55		286	72
149	4.30	0.04	10.59		285	72
150	4.30	0.04	10.48		283	72
151	4.20	0.04	10.53		281	72
152	4.20	0.05	10.56		281	72
153	4.20	0.04	10.51		280	72
154	4.10	0.04	10.45		278	72
155	4.10	0.03	10.16		278	72
156	4.00	0.04	10.29		276	72
157	3.90	0.04	10.27		274	72
158	4.00	0.03	10.16		272	72
159	3.90	0.03	9.93		271	72
160	3.80	0.03	10.11		270	72
161	3.80	0.03	10.1		270	72
162	3.70	0.03	10.01		269	72
163	3.70	0.03	9.96		267	72
164	3.70	0.03	9.92		266	72
165	3.60	0.03	10		265	72
166	3.60	0.04	10.02		263	72
167	3.60	0.03	9.82		262	72
168	3.50	0.04	9.95		261	72
169	3.50	0.04	9.85		261	72
170	3.50	0.04	9.83		260	72
171	3.40	0.04	9.77		259	72
172	3.30	0.03	9.57		258	72
173	3.30	0.02	9.83		256	72
174	3.30	0.02	9.61		256	72

175	3.20	0.02	9.6		254	72
176	3.20	0.02	9.63		252	72
177	3.20	0.02	9.66		251	72
178	3.20	0.02	9.59		249	72
179	3.10	0.02	9.58		249	72
180	3.10	0.02	9.51		247	72
181	3.00	0.02	9.56		246	72
182	3.00	0.02	9.51		245	72
183	3.00	0.03	9.57		245	72
184	2.90	0.03	9.57		244	72
185	2.90	0.03	9.44		244	72
186	2.90	0.03	9.31		242	72
187	2.90	0.02	8.9		241	72
188	2.80	0.02	8.8		240	72
189	2.80	0.01	8.86		239	72
190	2.80	0.01	8.79		238	72
191	2.70	0.01	8.72		236	72
192	2.70	0.01	8.61		234	72
193	2.70	0.01	8.6		233	72
194	2.70	0.01	8.55		232	72
195	2.70	0.01	8.4		230	72
196	2.70	0.01	8.43		229	72
197	2.60	0.01	8.37		227	72
198	2.60	0.01	8.38		226	72
199	2.60	0.01	8.47		225	72
200	2.60	0	8.5		224	72
201	2.60	0	8.57		223	72
202	2.50	0	8.49		222	72
203	2.50	0	8.56		221	72
204	2.50	0	8.53		219	72
205	2.50	0	8.49		219	72
206	2.40	0.01	8.45		218	72
207	2.40	0	8.31		217	72
208	2.40	0	8.27		217	72
209	2.40	0	8.25		216	72
210	2.40	0	8.26		215	72
211	2.30	0.01	8.3		215	72
212	2.30	0.01	8.24		214	72
213	2.30	0.01	8.28		213	72

214	2.30	0	8.19		212	72
215	2.20	0	8.24		212	72
216	2.20	0	8.25		211	72
217	2.20	0	8.23		211	72
218	2.20	0	8.18		210	72
219	2.20	0	8.18		210	72
220	2.10	0	8.13		209	72
221	2.10	0	8.13		208	72
222	2.10	0	8.05		207	72
223	2.10	0	8.08		207	72
224	2.10	0	8.01		207	72
225	2.00	0	7.96		206	72
226	2.00	0	7.91		206	72
227	2.00	0	7.88		206	72
228	2.00	0	7.92		205	72
229	2.00	0.01	7.88		204	72
230	2.00	0.01	7.9		204	72
231	1.90	0.01	7.95		204	72
232	1.90	0.01	7.89		204	72
233	1.90	0.01	7.92		203	72
234	1.90	0.01	7.89		203	72
235	1.90	0.01	7.92		203	72
236	1.80	0.01	7.76		202	72
237	1.80	0.01	7.56		202	72
238	1.80	0.01	7.53		202	72
239	1.80	0.01	7.52		201	72
240	1.80	0.01	7.55		201	72
241	1.80	0.01	7.53		201	72
242	1.70	0.01	7.53		201	72
243	1.70	0.02	7.55		201	72
244	1.70	0.01	7.51		200	72
245	1.70	0.02	7.57		200	72
246	1.70	0.02	7.48		200	72
247	1.70	0.01	7.41		200	72
248	1.70	0.02	7.39		200	72
249	1.60	0.02	7.47		200	72
250	1.60	0.02	7.5		200	72
251	1.70	0.02	7.4		199	72
252	1.70	0.02	7.42		199	72

253	1.60	0.02	7.32		198	72
254	1.60	0.02	7.37		198	72
255	1.60	0.02	7.31		198	72
256	1.60	0.02	7.33		198	72
257	1.60	0.02	7.27		198	72
258	1.60	0.02	7.21		198	72
259	1.60	0.02	7.24		198	72
260	1.50	0.03	7.22		197	72
261	1.60	0.03	7.22		197	72
262	1.50	0.03	7.23		197	72
263	1.50	0.02	7.23		197	72
264	1.50	0.03	7.2		196	72
265	1.50	0.03	7.21		196	72
266	1.50	0.02	7.2		196	72
267	1.40	0.03	7.18		196	72
268	1.40	0.03	7.19		196	72
269	1.40	0.03	7.13		196	72
270	1.40	0.03	7.18		196	72
271	1.40	0.03	7.1		196	72
272	1.40	0.03	7.16		196	72
273	1.40	0.02	7.1		196	72
274	1.40	0.02	7.04		195	72
275	1.30	0.02	6.94		195	72
276	1.30	0.03	7		195	72
277	1.30	0.03	6.9		194	72
278	1.30	0.03	7.05		194	72
279	1.30	0.02	7.05		194	72
280	1.30	0.02	7.01		194	72
281	1.30	0.02	6.96		193	72
282	1.30	0.03	6.92		193	72
283	1.30	0.02	6.92		193	72
284	1.30	0.02	7		193	72
285	1.30	0.02	6.98		192	72
286	1.20	0.02	7.02		193	72
287	1.20	0.02	7.08		192	72
288	1.20	0.01	7.05		192	72
289	1.20	0.01	7.09		192	72
290	1.20	0.01	7.05		192	72
291	1.20	0.01	7.03		191	72

292	1.20	0.01	6.84		191	72
293	1.20	0.01	6.83		191	72
294	1.20	0.01	6.79		191	72
295	1.10	0.01	6.79		190	72
296	1.10	0.01	6.85		190	72
297	1.10	0.01	6.86		190	72
298	1.10	0.01	6.93		190	72
299	1.10	0.01	6.92		189	72
300	1.10	0.01	7		189	72
301	1.00	0.01	6.89		189	72
302	1.00	0.01	6.99		189	72
303	1.00	0.01	6.94		189	72
304	1.00	0.01	7.07		188	72
305	1.00	0.01	7.07		188	72
306	1.00	0.02	7.31		188	72
307	1.00	0.02	7.23		188	72
308	1.00	0.02	7.18		188	72
309	1.00	0.02	7.27		188	72
310	1.00	0	7.28		188	72
311	0.90	0	7.31		187	72
312	0.90	0	7.15		187	72
313	0.90	0	7.18		186	72
314	0.90	0	7.16		186	72
315	0.90	0	7.09		186	72
316	0.90	0	7.06		185	72
317	0.80	0	7.06		185	72
318	0.80	0	6.98		185	72
319	0.90	0	6.89		185	72
320	0.80	0	6.93		185	72
321	0.80	0	6.93		185	72
322	0.80	0	6.96		185	72
323	0.80	0	6.97		185	72
324	0.80	0	7		185	72
325	0.70	0	6.94		184	72
326	0.80	0	6.87		184	72
327	0.70	0	6.87		185	72
328	0.70	0	6.9		185	72
329	0.70	0	6.92		185	72
330	0.70	0	6.95		184	72

331	0.70	0	6.98		184	72
332	0.70	0	6.94		184	72
333	0.70	0	7		184	72
334	0.60	0	7.03		184	72
335	0.60	0	7.06		184	72
336	0.70	0	7.05		184	72
337	0.70	0	7.09		184	72
338	0.60	0	7.01		185	72
339	0.60	0.01	6.89		185	72
340	0.60	0.01	6.78		185	72
341	0.60	0	6.67		184	72
342	0.60	0	6.68		184	72
343	0.60	0	6.41		184	72
344	0.50	0	6.39		185	72
345	0.50	0	6.31		184	72
346	0.50	0	6.31		184	72
347	0.50	0	6.24		184	72
348	0.50	0	6.29		184	72
349	0.50	0	6.22		184	72
350	0.50	0	6.16		183	72
351	0.40	0	6.16		183	72
352	0.40	0	6.19		183	72
353	0.40	0	6.17		183	72
354	0.40	0	6.2		183	72
355	0.40	0	6.15		183	72
356	0.40	0	6.15		182	72
357	0.40	0	6.11		182	72
358	0.40	0	6.13		182	72
359	0.40	0	6.08		182	73
360	0.30	0	5.89		182	72
361	0.30	0	5.84		181	72
362	0.30	0	5.84		181	72
363	0.30	0	5.8		181	72
364	0.30	0.01	5.83		181	72
365	0.30	0.01	5.83		181	72
366	0.30	0.01	5.87		181	72
367	0.30	0.01	5.83		181	72
368	0.30	0.01	5.91		180	72
369	0.30	0.01	5.87		180	73

370	0.30	0.01	5.9		180	72
371	0.30	0	5.97		180	72
372	0.20	0	6		179	72
373	0.20	0	5.97		179	72
374	0.20	0	5.85		179	72
375	0.20	0	5.91		178	72
376	0.20	0	5.91		178	73
377	0.20	0	5.96		178	73
378	0.20	0	6.02		177	73
379	0.20	0	6.03		177	73
380	0.10	0	6.07		177	73
381	0.10	0	6.02		177	73
382	0.10	0	6.04		177	73
383	0.10	0	6.05		177	73
384	0.10	0.01	6.11		177	73
385	0.10	0.01	6.15		176	73
386	0.10	0.01	6.2		176	73
387	0.10	0.01	6.18		177	73
388	0.00	0.01	6.16		177	73

OMNI-Test Laboratories, Inc.

Manufacturer:	Kuma Stoves
Model:	K-251
Date:	05/09/23
Run:	6
Control #:	2464
Test Duration:	388
Output Category:	II

Technicians: _____

_____

_____

Test Results in Accordance with CSA B415.1-10

	HHV Basis	LHV Basis
Overall Efficiency	80.0%	86.5%
Combustion Efficiency	98.9%	98.9%
Heat Transfer Efficiency	81%	87.5%

Output Rate (kJ/h)	16,544	15,694	**(Btu/h)**
Burn Rate (kg/h)	1.04	2.30	**(lb/h)**
Input (kJ/h)	20,670	19,608	**(Btu/h)**

Test Load Weight (dry kg)	6.75	14.87	**dry lb**
MC wet (%)	16.92		
MC dry (%)	20.37		
Particulate (g)	8.05		
CO (g)	126		
Test Duration (h)	6.47		

Emissions	**Particulate**	**CO**
g/MJ Output	0.08	1.18
g/kg Dry Fuel	1.19	18.70
g/h	1.24	19.51
lb/MM Btu Output	0.17	2.74

Air/Fuel Ratio (A/F)	11.83

VERSION: **2.4** **4/15/2010**

OMNI-Test Laboratories, Inc. **ASTM E2780 Wood Heater Run Sheets**

Client: Kuma Project Number: 0123WM014E Run Number: 6
Model: K-251 Tracking Number: 2464 Date: 05/09/2023
Test Crew: Tony Tong
OMNI Equipment ID numbers: 00637, 00709, 00283/4

ASTM E2515 Lab Sheet

Assembled By: Tony Tong

Date/Time in Dessicator: 05/09/23, 1800

	Weighing #1	Weighing #2	Weighing #3	Weighing #4	Weighing #5
Date/Time:	05/11/23 14:35	05/16/23 8:30	05/18/23 7:30		
R/H %:	15.1	3.7	22.3		
Temp:	72.6	75.0	76.1		
200 mg Audit:	200.2	200.2	200.1		
2 g Audit:	2000.3	2000.3	2000.4		
100 g Audit:	99998.0	99997.8	99997.8		
Initials:	TT	TT	TT		

Train	Element	ID #	Tare (mg)	Weight (mg)	Weight (mg)	Weight (mg)	Weight (mg)	Weight (mg)
A (First Hour)	Front Filter	E911	116.6	118.7	118.5			
	Rear Filter	E912	115.6	115.6	115.6			
	Probe	14	114546.4	114547.6	114546.9	114546.8		
	O-Ring Set	S484	3317.3	3317.6	3317.5			
A (Remainder)	Front Filter	E913	117.4	119.3	119.3			
	Rear Filter	E914	117.2	117.4	117.3			
	Probe	71	117766.1	117766.5	117766.4			
	O-Ring Set	S485	3402.8	3402.9	3402.8			
B	Front Filter	E915	117.0	120.8	120.8			
	Rear Filter	E916	117.5	118.0	117.9			
	Probe	82	116286.5	116286.7	116286.6			
	O-Ring Set	S486	3454.7	3454.8	3454.7			
BG	Filter	E917	115.8	115.9	115.9			

Technician Signature: Tony Tong Date: 05/18/23

OMNI-Test Laboratories, Inc.

ASTM E2780 Wood Heater Run Sheets

Client: Kuma Project Number: 0123WM014E Run Number: 6
Model: K-251 Tracking Number: 2464 Date: 05/09/2023
Test Crew: ~~Tony Tong, Kilsey Triggs~~
OMNI Equipment ID numbers: ~~00335, 00336~~, 00594, 00185, 00322

Wood Heater Run Notes

Air Control Settings

Primary:

Air control set to stop (closed)

Secondary: Fixed

Tertiary/Pilot: N/A

Fan: ~~Fan off for first 30 mins then turned to~~ low ~~for the remainder of test.~~

Preburn Notes

Time	Notes
10:11	~~Reading~~ Recording Preburn data @ 7.7 lbs at low burn ~~setting~~
11:11	Preburn ended

Test Notes

Sketch test fuel configuration:

Start up procedures & Timeline:

Bypass: Used to load fuel only
Fuel loaded by: 50
Door closed at: 60
Primary air:

Notes:

Time	Notes
11:12	Loaded by 50 sec
11:14	Air open, gradually closed by 3 min 40 sec.
12:12	First hour filters change.
1740	Test done

Technician Signature: Tony Tong Date: 05/09/23

OMNI-Test Laboratories, Inc.

ASTM E2780 Wood Heater Run Sheets

Client: Kuma Project Number: 0123WM014E Run Number: 6
Model: K-251 Tracking Number: 2464 Date: 05/09/2023
Test Crew: Tony Tong / Riley Triggs
OMNI Equipment ID numbers: 00594, 00440, 00716, 00721, 00255

Wood Heater Supplemental Data

Start Time: 11:12 Booth #: E1

Stop Time:

Stack Gas Leak Check:

Initial: good Final: ✓

Sample Train Leak Check:

1st hour A: 0.007 @ 3.0" Hg
B: 0.00 @ 5.0" Hg
A remainder 0.002 2.7

Calibrations: Span Gas CO_2: 16.84% CO: 4.38% CO: 500 ppm

	Pre Test		Post Test	
	Zero	Span	Zero	Span
Time	9:03	9:05	1748	1750
CO_2 %	0.00	16.83	0.02	16.60
CO %	0.00	4.39	-0.086	4.20
CO ppm	0.0	493 250		

Air Velocity (ft/min): Initial: <50 Final:

Scale Audit (lbs): Initial: 10 Final: 10.0

Pitot Tube Leak Test: Initial: good Final: ✓

Stack Diameter (in): 6

Induced Draft: 0.000

% Smoke Capture: 100

Flue Pipe Cleaned Prior to First Test in Series:

Date: 04/04/23 Initials: TT

	Initial	Middle	Ending
P_b (in/Hg)	30.14	30.09	30.03
RH (%)	46	43	41
Ambient (°F)	69	72	73

Tunnel Traverse

Microtector Reading	dP (in H_2O)	T(°F)
1	~~0.074~~	80 0.132
2	~~0.092~~	80 0.064
3	0.158	80 0.158
4	0.112	80
5	0.106	80
6	0.166	80
7	0.170	80
8	0.130	80
Center:		
	~~0.099~~ 0.181	80

Background Filter Volume: 58.621

Tunnel Static Pressure (in H_2O):	
Beginning of Test	End of Test
-0.50	-0.58

Technician Signature: Tony Tong Date: 05/09/23

OMNI-Test Laboratories, Inc.

ASTM E2780 Wood Heater Run Sheets

Client: Kuma Project Number: 0123WM014E Run Number: 6
Model: K-251 Tracking Number: 2464 Date: 05/09/2023
Test Crew: Tom Tong
OMNI Equipment ID numbers: 00340, 00431, T61, 00353

Wood Heater Fuel Data

Fuel: Douglas fir, untreated and air dried, standard grade or better dimensional lumber

Pre-Burn Fuel

Calibration: Cal Value (1) = 12% Actual Reading 12.1
Cal Value (2) = 22% Actual Reading 22.1

Piece:	Length:	Reading:	Piece:	Length:	Reading:
1	12 in	22.1	7	16 in	23.8
2	12 in	24.5	8	in	
3	12 in	24.5	9	in	
4	12 in	22.2	10	in	
5	16 in	19.1	11	in	
6	16 in	24.8	12	in	

Total Pre-Burn Fuel Weight: 10.1 lbs Pre-Burn Fuel Average Moisture:

Time (clock): 8:20 Room Temperature (F): 68 Initials: TT

Test Fuel

Firebox Volume (ft³): 2.56
Load Weight Range (lb): ~~(16.13, 19.76)~~ (3.6, 4.5)
Test Fuel Piece Length (in): 17.25"
Total Wet Fuel Load Weight (lb): ~~18.0~~ lbs 19.9 lb

Fuel Type & Amount: 2 x 4: 4 4 x 4: 2 7.7 lbs
Weight (with spacers): 8.7 lbs Weight (with spacers): 9.3 lbs

Piece:	Weight (lbs):	Moisture Readings (%DB):				Fuel Type:
1	1.7	23.8	23.8	20.6		2x4
2	1.8	23.1	23.8	20.0		2x4
3	1.7	22.2	23.8	19.1		2x4
4	1.8	21.9	19.5	24.8		2x4
5	4.2	20.4	21.4	21.9		4x4
6	4.7	20.6	21.2	22.2		4x4
7						

Dry Weight = 14.87 lb = 6.74 Kg

1.0 Kg/hr @ 6:45

Spacer Moisture Readings (%DB)

11.3	11.5	11.1	11.3	10.9	8.7	9.4	10.2
10.9	10.9	10.1	11.8	10.6	11.6	11.4	11.2
10.3	11.1	10.9	11.1				

Time (clock): 8:50 Room Temperature (F): 68 Initials: TT

Technician Signature: Tom Tong Date: 05/09/23

Run 7

Low Burn (Category I)

Wood Heater Preburn Data - ASTM E2780

Run:	7

Technician Signatu

Manufacturer:	Kuma Stoves
Model:	K-251
Tracking No.:	2464
Project No.:	0123WM014E
Test Date:	5/11/23
Beginning Clock Time:	10:35

Preburn Fuel Data

8 pieces @ 12 inches
_____ pieces @ _____ inches
_____ pieces @ _____ inches

Fuel Moisture Readings (% DB):

23.8	22.7	22.1	22.8	23.2	22.4	23.3
22.2						

Avg Preburn Moisture (% DB) **22.81**

Coal Bed Range (lb):	**3.6** (min)	**4.5** (max)

			Temperatures (°F)								
Elapsed Time (min)	Scale (lb)	Stack Draft (in H_2O)	FB Top	FB Bottom	FB Back	FB Left	FB Right	Cat Exit	Avg. FB	Stack	Ambient
0	8.3	-0.069	644	369	306	450	421	3218	438.2	469	74
1	8.2	-0.06	646	370	307	451	422	3218	439.2	409	74
2	8.1	-0.057	640	371	308	452	424	3218	438.8	359	74
3	8	-0.055	629	373	308	452	424	3218	437.3	331	74
4	7.9	-0.052	615	374	308	451	425	3218	434.7	311	74
5	7.9	-0.05	600	375	306	450	425	3218	431.2	293	74
6	7.8	-0.048	583	376	305	448	424	3218	427.3	279	74
7	7.8	-0.047	567	377	304	446	424	3218	423.4	269	73
8	7.7	-0.046	551	377	301	444	423	3218	419.1	260	73
9	7.7	-0.044	536	377	299	441	421	3218	414.8	253	73
10	7.7	-0.043	522	377	295	439	419	3218	410.5	245	73
11	7.6	-0.042	508	377	293	436	417	3218	406.3	239	73
12	7.6	-0.041	496	377	292	433	415	3218	402.6	233	73
13	7.5	-0.04	485	377	288	430	413	3218	398.6	229	73
14	7.5	-0.04	475	376	287	427	411	3218	395.2	225	73
15	7.4	-0.039	465	375	285	425	409	3218	391.8	221	73
16	7.4	-0.039	457	375	282	422	407	3218	388.6	217	73
17	7.4	-0.038	450	374	280	419	405	3218	385.4	215	73
18	7.3	-0.038	443	373	277	417	403	3218	382.4	212	73
19	7.3	-0.037	436	373	276	414	401	3218	379.9	210	73
20	7.3	-0.037	431	372	274	411	398	3218	377.1	208	73
21	7.2	-0.036	425	371	273	409	396	3218	374.9	207	73
22	7.2	-0.036	421	370	271	406	394	3218	372.5	205	73
23	7.1	-0.036	417	369	269	404	392	3218	370.4	204	73
24	7.1	-0.036	415	368	268	402	390	3218	368.7	203	73
25	7	-0.035	413	367	267	400	388	3218	367.2	203	73
26	7	-0.035	411	366	266	398	387	3218	365.7	202	73
27	6.9	-0.035	410	365	265	396	385	3218	364.2	202	73
28	6.9	-0.034	409	364	264	395	383	3218	362.9	202	73
29	6.8	-0.034	408	363	263	393	381	3218	361.7	201	73
30	6.8	-0.034	408	362	263	392	379	3218	360.8	200	73
31	6.8	-0.035	408	361	261	390	378	3218	359.7	201	73
32	6.7	-0.034	409	360	261	389	377	3218	359	201	73
33	6.6	-0.034	410	359	260	387	375	3218	358.3	201	73
34	6.6	-0.036	411	358	261	386	374	3218	357.8	202	73
35	6.5	-0.034	412	357	260	385	373	3218	357.2	203	73
36	6.5	-0.034	413	355	259	384	372	3218	356.6	203	73
37	6.4	-0.035	425	354	280	384	371	3218	362.8	204	73
38	6.4	-0.034	433	353	284	383	371	3218	365.1	206	73
39	6.3	-0.036	441	352	288	383	371	3218	367	207	73
40	6.2	-0.035	448	351	291	382	371	3218	368.8	209	73
41	6.2	-0.035	455	350	295	382	370	3218	370.4	210	74
42	6.1	-0.035	462	349	297	381	370	3218	371.8	212	74

Wood Heater Preburn Data - ASTM E2780

Run:	7

Technician Signatu

Manufacturer:	Kuma Stoves
Model:	K-251
Tracking No.:	2464
Project No.:	0123WM014E
Test Date:	5/11/23
Beginning Clock Time:	10:35

Preburn Fuel Data

8 pieces @ 12 inches
_____ pieces @ _____ inches
_____ pieces @ _____ inches

Fuel Moisture Readings (% DB):

23.8	22.7	22.1	22.8	23.2	22.4	23.3
22.2						

Avg Preburn Moisture (% DB) **22.81**

Coal Bed Range (lb):	3.6 (min)	4.5 (max)

			Temperatures (°F)								
Elapsed Time (min)	Scale (lb)	Stack Draft (in H_2O)	FB Top	FB Bottom	FB Back	FB Left	FB Right	Cat Exit	Avg. FB	Stack	Ambient
43	6.1	-0.037	469	348	300	381	369	3218	373.3	214	74
44	6	-0.036	475	347	302	380	369	3218	374.7	215	74
45	6	-0.036	480	346	304	380	369	3218	375.7	214	74
46	5.9	-0.036	495	345	306	379	368	3218	378.9	216	74
47	5.9	-0.036	518	344	308	379	368	3218	383.2	220	74
48	5.8	-0.037	540	343	309	378	367	3218	387.4	225	74
49	5.7	-0.038	563	342	310	376	366	3218	391.4	229	74
50	5.7	-0.039	584	341	311	375	365	3218	395.2	233	74
51	5.6	-0.04	603	340	311	374	364	3218	398.5	237	74
52	5.5	-0.039	621	340	312	373	362	3218	401.5	241	74
53	5.5	-0.04	637	339	312	372	361	3218	404.2	244	74
54	5.4	-0.04	651	338	312	371	360	3218	406.6	245	74
55	5.4	-0.041	663	337	313	370	360	3218	408.8	257	74
56	5.2	-0.041	674	337	314	370	359	3218	410.6	263	74
57	5.1	-0.041	684	336	315	369	358	3218	412.4	265	74
58	5.1	-0.041	693	335	315	369	358	3218	413.9	266	74
59	5	-0.041	700	335	316	368	357	3218	415.3	268	74
60	5	-0.04	706	334	317	368	356	3218	416.3	268	74
61	4.9	-0.04	711	334	317	368	356	3218	417.3	267	74
62	4.9	-0.041	715	333	318	368	356	3218	418.2	267	75
63	4.8	-0.04	719	333	320	368	356	3218	419	267	75
64	4.8	-0.04	721	332	321	368	356	3218	419.4	266	75
65	4.7	-0.04	721	332	321	368	355	3218	419.5	265	75
66	4.7	-0.04	718	331	322	368	355	3218	419.2	264	75
67	4.7	-0.039	715	331	323	369	355	3218	418.7	263	75
68	4.6	-0.039	709	331	324	369	355	3218	417.8	263	75
69	4.6	-0.039	703	331	325	369	356	3218	416.7	261	75
70	4.6	-0.038	695	331	326	370	356	3218	415.4	260	75
71	4.5	-0.038	686	331	327	370	356	3218	413.7	258	75
72	4.5	-0.037	676	331	328	370	356	3218	412.2	256	75
73	4.5	-0.037	667	331	329	370	357	3218	410.7	254	75
74	4.5	-0.037	657	331	330	371	357	3218	408.9	252	75
75	4.4	-0.037	647	331	330	371	357	3218	407.3	250	75
76	4.4	-0.036	638	331	331	371	358	3218	405.8	248	75
77	4.4	-0.036	629	331	332	371	358	3218	404.3	245	75
78	4.4	-0.036	620	332	333	372	358	3218	402.9	244	75
79	4.3	-0.035	612	332	333	372	359	3218	401.5	242	75
80	4.3	-0.035	604	332	334	372	359	3218	400.1	240	75
81	4.3	-0.034	595	332	335	372	359	3218	398.8	238	75
82	4.3	-0.034	587	333	335	372	359	3218	397.3	236	75
83	4.2	-0.034	579	333	336	373	360	3218	396.1	234	75
84	4.2	-0.034	571	333	336	373	360	3218	394.7	232	75
85	4.2	-0.033	563	334	337	373	360	3218	393.3	231	75

Wood Heater Preburn Data - ASTM E2780

Run: 7

Technician Signatu

Manufacturer: Kuma Stoves
Model: K-251
Tracking No.: 2464
Project No.: 0123WM014E
Test Date: 5/11/23
Beginning Clock Time: 10:35

Preburn Fuel Data

8 pieces @ 12 inches
_____ pieces @ _____ inches
_____ pieces @ _____ inches

Fuel Moisture Readings (% DB):

23.8	22.7	22.1	22.8	23.2	22.4	23.3
22.2						

Avg Preburn Moisture (% DB) **22.81**

Coal Bed Range (lb):	**3.6** (min)	**4.5** (max)

			Temperatures (°F)								
Elapsed Time (min)	Scale (lb)	Stack Draft (in H_2O)	FB Top	FB Bottom	FB Back	FB Left	FB Right	Cat Exit	Avg. FB	Stack	Ambient
86	4.2	-0.032	556	334	338	373	360	3218	392.1	229	75
87	4.2	-0.032	549	335	338	372	360	3218	390.8	226	75
88	4.2	-0.032	542	335	339	372	360	3218	389.6	225	75
89	4.1	-0.032	535	335	339	372	360	3218	388.3	223	75
90	4.1	-0.032	528	336	339	372	360	3218	387.2	222	75

Wood Heater Test Fuel Data - ASTM E2780

Manufacturer :	Kuma Stoves
Model :	K-251
Tracking No. :	2464
Project No. :	0123WM014E
Test Date :	5/11/2023
Run No. :	7

Moisture Meter Cal	
Cal Block	Measured
12.0	12.0
22.0	22.0

Firebox Volume :	2.56	ft3
% 2 x 4 Required :	35 - 65	%
Ideal Fuel Weight :	17.92	lb.
Minimum Fuel Weight :	16.13	lb.
Maximum Fuel Weight :	19.71	lb.

Fuel Piece Data

PC #	Weight, lb	Size	Length, In	Moisture Readings, Dry Basis %			Average MC, % db	Dry Weight, lb.	Volume, ft3	Wet Weights, lb 4 x 4	Wet Weights, lb 2 x 4	Dry Weights, lb 4 x 4	Dry Weights, lb 2 x 4
1	1.80	2x4	17.25	24.2	22.5	19.3	22.0	1.48	0.0524		1.8		1.48
2	1.70	2x4	17.25	21.7	23.8	21.5	22.3	1.39	0.0524		1.7		1.39
3	1.70	2x4	17.25	23.1	22.1	23.5	22.9	1.38	0.0524		1.7		1.38
4	1.50	2x4	17.25	20.4	22.3	20.5	21.1	1.24	0.0524		1.5		1.24
5	4.50	4x4	17.25	20.1	21.6	19.8	20.5	3.73	0.1223	4.5		3.73	
6	4.70	4x4	17.25	22.7	19.8	19.5	20.7	3.90	0.1223	4.7		3.90	
7													
8													
9													

Spacer Data

Moisture Readings, Dry Basis % (One reading per spacer)								
12.5	10.0	11.0	11.1	10.2	11.5	10.6	11.1	
10.9	12.4	11.4	10.7	10.6	11.1	11.1	11.0	
10.9	11.2	8.5	11.3					

Avg : 11.0

Assembled Crib Fuel Load with Spacers Attatched

PC #	Weight, lb with Spacers	Size	4 x 4s	2 x 4s
1	2.20	2x4		2.2000
2	2.10	2x4		2.1000
3	2.10	2x4		2.1000
4	2.00	2x4		2.0000
5	4.70	4x4	4.70	
6	4.80	4x4	4.80	
7				
8				
9				

Combined Mass of 4 x 4s	9.5	lb
Combined Mass of 2 x 4s	8.4	lb
Total Wet Mass of Fuel Load	**17.9**	lb

Fuel Load Properties

Type	Number of Pieces	Wet Weight, lb.	Dry Weight, lb.	Fuel Loading Density, lb/ft³ Wet Basis	Fuel Loading Density, lb/ft³ Dry Basis	Dry Fuel Density, lb/ft³	Wet Fuel Density, lb/ft³	Moisture, % Dry Basis	Moisture, % Wet Basis
2 x 4	4	6.7	5.49	6.99	5.83	28.88	35.01	19.98	16.65
4 x 4	2	9.2	7.63						
Spacers	20	2.0	1.80						
Totals		17.9	14.92						

Compliance Checks

	Fuel Load, Wet Lb.	Load Density, lb/ft³ of FB vol	Fuel Density, lb/ft³	% of Fuel load mass which is 2x4	Fuel Load Peices Mositure, % db
Measured	17.9	6.99	28.88	47	21.6
Required	16.1 - 19.7	6.3 - 7.7	25 - 36	35 - 65	19 -25
Complies ?	Yes	Yes	Yes	Yes	Yes

Wood Heater Test Data

u

Run: 7

Manufacturer: Kuma Stoves
Model: K-251
Tracking No.: 2464
Project No.: 0123WM014E
Test Date: 11-May-23
Beginning Clock Time: 12:06

Total Sampling Time: 563 min
Recording Interval: 1 min
Tunnel Diameter: 6
Background Sample Volume: 95.509 cubic feet

PM Control Modules: 335,336
Dilution Tunnel MW(dry): 29.00 lb/lb-mole
Dilution Tunnel MW(wet): 28.78 lb/lb-mole
Dilution Tunnel H2O: 2.00 percent
Dilution Tunnel Static: -0.500 "H2O
Tunnel Area: 0.19635 ft2
Pitot Tube Cp: 0.99

Avg. Tunnel Velocity: 25.28 ft/sec.
Initial Tunnel Flow: 286.0 scfm
Average Tunnel Flow: 284.4 scfm
Post-Test Leak Check (1st Hr): 0.001 cfm @ 14 in. Hg
Post-Test Leak Check (1): 0.000 cfm @ 9 in. Hg
Post-Test Leak Check (2): 0.000 cfm @ 14 in. Hg
Average Test Piece Fuel Moisture: 19.98 Dry Basis %

Technician Signature:_____

Meter Box Y Factor: 1.007 (1) 1.015 (2) 1.012 (Amb)

Export to PDF

Barometric Pressure:

Begin	Middle	End	Average
30.13	30.05	30.05	30.08

Room Air Velocity, fpn
<50

OMNI Equipment Numbers: _____

Velocity Traverse Data

	Pt.1	Pt.2	Pt.3	Pt.4	Pt.5	Pt.6	Pt.7	Pt.8	Center	
Initial dP	0.134	0.160	0.156	0.110	0.138	0.154	0.174	0.124	0.174	"H2O
Temp:	83	83	83	83	83	83	83	83	83	°F

V_{strav} 25.35 ft/sec V_{scent} 27.95 ft/sec F_p 0.907

qwq

	Particulate Sampling Data														Fuel Weight (lb)		Temperature Data (°F)													Stack Gas Data		
Elapsed Time (min)	Gas Meter 1 (ft^3)	Gas Meter 2 (ft^3)	Sample Rate 1 (cfm)	Sample Rate 2 (cfm)	Orifice dH 1 ("H_2O)	Meter 1 Temp (°F)	Meter 1 Vacuum ("Hg)	Orifice dH 2 ("H_2O)	Meter 2 Temp (°F)	Meter 2 Vacuum ("Hg)	Dilution Tunnel (°F)	Dilution Tunnel Center dP	Pro. Rate 1	Pro. Rate 2	Scale Reading	Weight Change	Firebox Top	Firebox Bottom	Firebox Back	Firebox Left	Firebox Right	Avg. Stove Surface (Tot = ΔT)	Catalyst Exit	Stack	Filter 1	Dryer Exit 1	Filter 2	Dryer Exit 2	Ambient	Draft ("H_2O)	CO_2 (%)	CO (%)
Tot / Avg	**90.51**	**90.80**	**0.16**	**0.16**	**1.24**	**87.60**	**3.12**	**0.96**	**87.46**	**1.60**	**84.03**	**0.17**	**100.01**	**100.01**		-17.9	469	312	311	335	337	**93**	773	214	77	60	77	61	77	(0.03)	9.12	0.23
Minimum			0.15	0.15	1.20	77.00	2.69	0.95	77.00	1.60	81.00	0.17	96.80	95.83	0.00	-0.100	319	293	244	272	283	293	573	162	73	49	73	52	74	(0.05)	1.65	0.07
Max			0.16	0.16	1.30	90.00	3.20	1.01	90.00	1.60	108.00	0.18	102.10	102.23	17.90	0.000	675	338	356	397	385	411	1010	350	79	65	79	66	78	(0.02)	12.98	1.03
0	0.000	0.000			1.20	77	2.69	0.96	77	1.6	87	0.177			17.9		521	334	340	374	362	386	831	305	73	56	73	57	75	-0.038	3.53	0.7
1	0.150	0.149	0.15	0.15	1.25	77	2.76	1.01	77	1.6	108	0.174	97	96	17.9	0	503	337	342	374	364	384	794	350	74	50	73	52	75	-0.047	1.65	0.39
2	0.309	0.311	0.16	0.16	1.29	77	2.81	1.00	77	1.6	90	0.175	101	102	17.9	0	488	338	344	374	363	381	734	276	74	49	73	52	75	-0.036	4.09	1.03
3	0.470	0.471	0.16	0.16	1.28	77	2.79	0.99	77	1.6	90	0.175	102	101	17.8	-0.1	480	336	344	372	363	379	700	314	74	49	74	52	75	-0.049	4.8	0.36
4	0.631	0.633	0.16	0.16	1.28	77	2.79	0.99	77	1.6	87	0.176	101	102	17.7	-0.1	477	336	343	370	361	377	700	284	74	49	74	52	75	-0.040	7.93	0.1
5	0.792	0.793	0.16	0.16	1.27	77	2.78	0.98	77	1.6	85	0.176	101	100	17.7	0	473	337	341	368	360	376	699	257	74	49	74	52	75	-0.040	5.5	0.08
6	0.952	0.954	0.16	0.16	1.27	77	2.78	0.98	77	1.6	85	0.178	100	100	17.6	-0.1	468	337	339	365	358	373	693	245	74	49	74	52	75	-0.039	5.3	0.07
7	1.111	1.115	0.16	0.16	1.26	77	2.78	0.97	77	1.6	84	0.178	99	100	17.6	0	463	337	337	362	356	371	683	239	74	49	74	52	75	-0.039	5.36	0.07
8	1.271	1.275	0.16	0.16	1.27	77	2.76	0.97	77	1.6	84	0.178	100	100	17.6	0	457	337	335	359	354	368	673	235	74	49	74	52	75	-0.039	5.35	0.07
9	1.432	1.435	0.16	0.16	1.27	77	2.77	0.98	77	1.6	84	0.176	101	100	17.5	-0.1	453	337	332	356	351	366	663	232	74	50	74	52	75	-0.038	5.5	0.07
10	1.592	1.595	0.16	0.16	1.26	77	2.77	0.97	77	1.6	84	0.176	100	100	17.5	0	448	337	330	353	349	363	655	230	74	50	74	52	75	-0.037	5.61	0.08
11	1.751	1.756	0.16	0.16	1.26	78	2.76	0.97	78	1.6	83	0.179	99	100	17.5	0	445	337	327	349	346	361	649	229	74	50	74	52	75	-0.038	5.58	0.08
12	1.910	1.915	0.16	0.16	1.26	78	2.77	0.97	78	1.6	83	0.177	99	99	17.4	-0.1	441	336	325	346	344	358	645	228	75	50	74	52	75	-0.038	5.37	0.09
13	2.070	2.076	0.16	0.16	1.26	78	2.77	0.97	78	1.6	84	0.177	100	100	17.4	0	439	336	323	343	341	356	642	226	75	50	74	52	74	-0.037	5.37	0.1
14	2.231	2.236	0.16	0.16	1.25	78	2.77	0.96	78	1.6	83	0.176	101	100	17.3	-0.1	435	336	320	340	339	354	639	226	75	50	74	52	75	-0.037	5.41	0.1
15	2.391	2.396	0.16	0.16	1.25	78	2.76	0.97	78	1.6	84	0.176	100	100	17.3	0	432	335	318	337	336	352	635	225	75	51	74	52	74	-0.037	5.59	0.1
16	2.550	2.556	0.16	0.16	1.26	78	2.76	0.97	78	1.6	83	0.177	99	100	17.3	0	430	334	316	335	334	350	633	225	75	51	74	52	75	-0.037	5.6	0.1
17	2.709	2.717	0.16	0.16	1.26	78	2.76	0.96	78	1.6	83	0.177	99	100	17.2	-0.1	427	334	313	332	332	348	630	226	75	51	74	53	74	-0.037	5.75	0.1
18	2.870	2.876	0.16	0.16	1.25	79	2.75	0.96	79	1.6	83	0.178	100	98	17.2	0	425	333	311	329	329	345	628	226	75	51	74	53	74	-0.037	5.69	0.1
19	3.029	3.036	0.16	0.16	1.25	79	2.76	0.96	79	1.6	83	0.178	99	99	17.1	-0.1	423	332	309	327	327	344	627	225	75	51	74	53	74	-0.037	5.95	0.1
20	3.188	3.197	0.16	0.16	1.25	79	2.76	0.96	79	1.6	83	0.175	100	101	17.1	0	421	331	307	325	325	342	626	226	75	52	74	53	74	-0.037	6.12	0.1
21	3.348	3.356	0.16	0.16	1.25	79	2.76	0.97	79	1.6	82	0.176	100	99	17.0	-0.1	420	330	305	322	323	340	627	227	75	52	74	53	74	-0.037	6.24	0.1
22	3.508	3.516	0.16	0.16	1.25	79	2.75	0.97	79	1.6	83	0.176	100	100	17.0	0	419	330	303	320	321	339	628	227	75	52	74	53	74	-0.038	6.31	0.1
23	3.668	3.677	0.16	0.16	1.25	79	2.75	0.96	79	1.6	83	0.177	100	100	16.9	-0.1	419	329	301	318	319	337	631	229	75	52	74	53	74	-0.038	6.33	0.11
24	3.827	3.836	0.16	0.16	1.25	80	2.76	0.96	80	1.6	83	0.177	99	99	16.9	0	418	328	299	316	317	336	634	229	75	53	75	54	74	-0.038	6.52	0.12
25	3.987	3.996	0.16	0.16	1.25	80	2.76	0.96	80	1.6	83	0.177	100	99	16.8	-0.1	418	327	297	314	315	334	638	230	75	53	75	54	74	-0.038	6.56	0.12
26	4.147	4.157	0.16	0.16	1.30	80	2.81	0.96	80	1.6	83	0.177	100	100	16.8	0	418	326	295	312	313	333	641	230	75	53	75	54	74	-0.038	6.63	0.12
27	4.309	4.319	0.16	0.16	1.29	80	2.8	0.99	80	1.6	83	0.174	102	101	16.7	-0.1	419	325	294	311	311	332	644	231	75	53	75	54	74	-0.038	6.51	0.12
28	4.472	4.480	0.16	0.16	1.28	80	2.81	0.99	80	1.6	83	0.177	101	100	16.7	0	419	324	292	309	310	331	646	231	75	53	75	54	74	-0.038	6.5	0.13
29	4.633	4.643	0.16	0.16	1.28	80	2.8	0.99	80	1.6	83	0.177	100	101	16.6	-0.1	419	323	291	307	308	330	648	231	75	53	75	54	74	-0.039	6.47	0.13
30	4.795	4.806	0.16	0.16	1.28	80	2.79	0.99	80	1.6	83	0.177	101	101	16.6	0	419	322	289	306	306	328	649	231	75	54	75	55	74	-0.038	6.45	0.13
31	4.957	4.968	0.16	0.16	1.28	81	2.8	0.99	81	1.6	82	0.177	101	100	16.5	-0.1	415	321	287	305	305	327	651	231	75	54	75	55	74	-0.039	6.57	0.13
32	5.118	5.130	0.16	0.16	1.29	81	2.81	0.99	81	1.6	82	0.177	100	100	16.5	0	413	320	285	304	304	325	652	230	75	54	75	55	74	-0.039	6.57	0.13
33	5.281	5.292	0.16	0.16	1.29	81	2.8	0.99	81	1.6	82	0.177	101	100	16.4	-0.1	411	319	283	303	303	324	652	229	75	54	75	55	74	-0.038	6.55	0.13
34	5.443	5.455	0.16	0.16	1.29	81	2.79	0.99	81	1.6	82	0.176	101	101	16.3	-0.1	409	318	282	302	302	323	653	228	75	54	75	55	74	-0.038	6.55	0.14
35	5.605	5.617	0.16	0.16	1.29	81	2.8	0.99	81	1.6	81	0.176	101	100	16.3	0	407	317	279	301	301	321	654	228	75	54	75	55	74	-0.038	6.59	0.14
36	5.768	5.779	0.16	0.16	1.28	81	2.79	0.99	81	1.6	81	0.177	101	100	16.2	-0.1	406	316	278	300	300	320	654	227	75	55	75	55	74	-0.038	6.61	0.14
37	5.930	5.942	0.16	0.16	1.28	81	2.81	0.99	81	1.6	81	0.176	101	101	16.2	0	404	316	276	299	299	319	655	226	75	55	75	56	74	-0.037	6.72	0.14
38	6.091	6.105	0.16	0.16	1.27	82	2.78	0.99	82	1.6	81	0.176	100	101	16.1	-0.1	403	315	274	298	298	318	656	226	75	55	75	56	74	-0.038	6.73	0.14
39	6.252	6.267	0.16	0.16	1.27	82	2.77	0.99	82	1.6	81	0.177	100	100	16.1	0	402	314	272	297	297	316	657	226	75	55	75	56	74	-0.038	6.83	0.14
40	6.413	6.429	0.16	0.16	1.27	82	2.78	0.99	82	1.6	81	0.179	99	99	16.0	-0.1	401	313	271	296	296	315	658	225	75	55	75	56	74	-0.038	6.9	0.15

Wood Heater Test Data

u

Run: 7

Manufacturer: Kuma Stoves
Model: K-251
Tracking No.: 2464
Project No.: 0123WM014E
Test Date: 11-May-23
Beginning Clock Time: 12:06

Total Sampling Time: 563 min
Recording Interval: 1 min
Tunnel Diameter: 6
Background Sample Volume: 95.509 cubic feet

PM Control Modules: 335,336
Dilution Tunnel MW(dry): 29.00 lb/lb-mole
Dilution Tunnel MW(wet): 28.78 lb/lb-mole
Dilution Tunnel H2O: 2.00 percent
Dilution Tunnel Static: -0.500 "H2O
Tunnel Area: 0.19635 ft2
Pitot Tube Cp: 0.99

Avg. Tunnel Velocity: 25.28 ft/sec.
Initial Tunnel Flow: 286.0 scfm
Average Tunnel Flow: 284.4 scfm
Post-Test Leak Check (1st Hr): 0.001 cfm @ 14 in. Hg
Post-Test Leak Check (1): 0.000 cfm @ 9 in. Hg
Post-Test Leak Check (2): 0.000 cfm @ 14 in. Hg
Average Test Piece Fuel Moisture: 19.98 Dry Basis %

Technician Signature:_____

Meter Box Y Factor: 1.007 (1) 1.015 (2) 1.012 (Amb)

Export to PDF

Barometric Pressure:	Begin	Middle	End	Average
	30.13	30.05	30.05	30.08

Room Air Velocity, fpn
<50

OMNI Equipment Numbers: _____

Velocity Traverse Data

	Pt.1	Pt.2	Pt.3	Pt.4	Pt.5	Pt.6	Pt.7	Pt.8	Center	
Initial dP	0.134	0.160	0.156	0.110	0.138	0.154	0.174	0.124	0.174	"H2O
Temp:	83	83	83	83	83	83	83	83	83	°F

V_{strav} 25.35 ft/sec V_{scent} 27.95 ft/sec F_p 0.907

qwq

	Particulate Sampling Data														Fuel Weight (lb)		Temperature Data (°F)													Stack Gas Data		
Elapsed Time (min)	Gas Meter 1 (ft^3)	Gas Meter 2 (ft^3)	Sample Rate 1 (cfm)	Sample Rate 2 (cfm)	Orifice dH 1 ("H_2O)	Meter 1 Temp (°F)	Meter 1 Vacuum ("Hg)	Orifice dH 2 ("H_2O)	Meter 2 Temp (°F)	Meter 2 Vacuum ("Hg)	Dilution Tunnel (°F)	Dilution Tunnel Center dP	Pro. Rate 1	Pro. Rate 2	Scale Reading	Weight Change	Firebox Top	Firebox Bottom	Firebox Back	Firebox Left	Firebox Right	Avg. Stove Surface (Tot = ΔT)	Catalyst Exit	Stack	Filter 1	Dryer Exit 1	Filter 2	Dryer Exit 2	Ambient	Draft ("H_2O)	CO_2 (%)	CO (%)
41	6.575	6.590	0.16	0.16	1.27	82	2.77	0.99	82	1.6	81	0.178	100	99	16.0	0	401	312	269	295	295	314	660	225	75	55	75	56	74	-0.038	6.94	0.15
42	6.737	6.753	0.16	0.16	1.27	82	2.78	0.99	82	1.6	81	0.176	101	101	15.9	-0.1	400	312	267	294	294	313	662	224	75	55	75	56	74	-0.037	7	0.15
43	6.898	6.915	0.16	0.16	1.26	82	2.79	0.99	82	1.6	81	0.177	100	100	15.9	0	400	311	266	294	293	313	663	224	75	55	75	56	74	-0.037	7.01	0.15
44	7.059	7.077	0.16	0.16	1.27	82	2.78	0.98	82	1.6	81	0.178	99	100	15.8	-0.1	400	310	264	293	293	312	665	224	75	56	75	56	74	-0.037	7.08	0.15
45	7.220	7.239	0.16	0.16	1.27	83	2.77	0.99	82	1.6	81	0.177	99	100	15.8	0	400	309	263	292	292	311	667	223	75	56	75	57	74	-0.037	7.12	0.15
46	7.381	7.401	0.16	0.16	1.27	83	2.77	0.98	83	1.6	81	0.177	99	100	15.7	-0.1	400	309	261	292	291	311	669	222	75	56	75	57	74	-0.037	7.18	0.15
47	7.542	7.563	0.16	0.16	1.27	83	2.79	0.96	83	1.6	81	0.178	99	99	15.7	0	400	308	260	291	291	310	671	222	75	56	75	57	74	-0.037	7.26	0.16
48	7.705	7.723	0.16	0.16	1.27	83	2.77	0.97	83	1.6	81	0.178	100	98	15.6	-0.1	401	308	259	290	290	310	674	223	75	56	75	57	74	-0.037	7.32	0.16
49	7.866	7.884	0.16	0.16	1.26	83	2.77	0.97	83	1.6	81	0.177	99	99	15.5	-0.1	401	307	258	290	290	309	677	223	75	56	75	57	74	-0.037	7.42	0.16
50	8.027	8.046	0.16	0.16	1.27	83	2.78	0.97	83	1.6	81	0.177	99	100	15.5	0	402	306	257	289	289	309	679	222	75	56	75	57	74	-0.037	7.55	0.17
51	8.188	8.206	0.16	0.16	1.26	83	2.78	0.96	83	1.6	81	0.176	100	99	15.4	-0.1	403	306	255	289	289	308	682	223	75	56	75	57	74	-0.037	7.57	0.17
52	8.349	8.367	0.16	0.16	1.27	83	2.77	0.97	83	1.6	81	0.177	99	99	15.4	0	405	305	255	288	288	308	686	223	75	56	75	57	74	-0.037	7.66	0.17
53	8.511	8.528	0.16	0.16	1.26	83	2.77	0.97	83	1.6	81	0.178	100	99	15.3	-0.1	406	305	253	288	287	308	689	224	75	57	75	57	74	-0.037	7.84	0.18
54	8.673	8.690	0.16	0.16	1.26	83	2.77	0.97	83	1.6	81	0.175	101	100	15.3	0	408	304	253	287	287	308	693	224	75	57	75	58	74	-0.037	7.82	0.18
55	8.835	8.850	0.16	0.16	1.27	83	2.78	0.97	83	1.6	81	0.176	100	99	15.2	-0.1	410	304	252	287	287	308	697	224	75	57	75	58	74	-0.037	8.01	0.18
56	8.996	9.011	0.16	0.16	1.26	83	2.78	0.97	83	1.6	81	0.177	99	99	15.2	0	412	303	251	287	286	308	701	226	75	57	75	58	74	-0.037	8.16	0.19
57	9.158	9.173	0.16	0.16	1.27	84	2.78	0.96	83	1.6	81	0.176	100	100	15.1	-0.1	415	303	250	286	286	308	706	227	75	57	75	58	74	-0.038	8.3	0.19
58	9.319	9.334	0.16	0.16	1.26	84	2.77	0.96	83	1.6	81	0.176	100	99	15.1	0	418	303	250	286	285	308	712	227	75	57	75	58	74	-0.038	8.28	0.19
59	9.480	9.494	0.16	0.16	1.27	84	2.78	0.97	84	1.6	81	0.177	99	98	15.0	-0.1	421	302	249	286	285	309	717	228	75	57	75	58	75	-0.038	8.29	0.19
60	9.642	9.655	0.16	0.16	1.27	84	2.77	0.97	84	1.6	81	0.179	99	98	14.9	-0.1	424	302	248	286	285	309	722	229	75	57	75	58	74	-0.038	8.42	0.2
61	9.802	9.817	0.16	0.16	1.26	84	3.18	0.97	84	1.6	81	0.178	98	99	14.9	0	427	302	248	286	285	310	727	231	73	57	75	58	75	-0.038	8.44	0.2
62	9.963	9.978	0.16	0.16	1.26	84	3.18	0.97	84	1.6	81	0.175	100	99	14.8	-0.1	430	301	247	286	284	310	732	231	74	57	75	58	74	-0.038	8.53	0.2
63	10.124	10.139	0.16	0.16	1.26	84	3.17	0.97	84	1.6	81	0.177	99	99	14.8	0	433	301	247	286	284	310	736	232	74	57	75	58	74	-0.038	8.75	0.21
64	10.285	10.300	0.16	0.16	1.26	84	3.18	0.97	84	1.6	81	0.176	100	99	14.7	-0.1	437	301	246	286	284	311	741	232	74	57	75	58	74	-0.038	8.85	0.22
65	10.446	10.462	0.16	0.16	1.26	84	3.19	0.96	84	1.6	81	0.175	100	100	14.6	-0.1	440	301	246	286	284	311	747	233	74	57	75	58	74	-0.038	8.81	0.24
66	10.608	10.622	0.16	0.16	1.26	84	3.18	0.97	84	1.6	82	0.176	100	99	14.6	0	445	300	246	287	284	312	754	234	74	58	75	58	74	-0.038	8.94	0.25
67	10.770	10.784	0.16	0.16	1.26	84	3.17	0.97	84	1.6	82	0.178	100	99	14.5	-0.1	449	300	246	287	284	313	760	234	74	58	75	58	74	-0.038	8.81	0.25
68	10.931	10.946	0.16	0.16	1.26	84	3.19	0.97	84	1.6	82	0.178	99	99	14.5	0	452	300	245	287	284	314	765	235	74	58	75	59	74	-0.039	8.79	0.25
69	11.092	11.106	0.16	0.16	1.26	84	3.19	0.97	84	1.6	81	0.178	99	98	14.4	-0.1	456	300	245	287	284	314	769	236	74	58	75	59	74	-0.039	8.84	0.25
70	11.253	11.267	0.16	0.16	1.26	84	3.17	0.97	84	1.6	81	0.177	99	99	14.4	0	459	299	245	288	284	315	772	236	74	58	75	59	74	-0.039	8.75	0.24
71	11.414	11.429	0.16	0.16	1.26	84	3.18	0.97	84	1.6	82	0.175	100	100	14.3	-0.1	462	299	244	288	283	315	774	237	74	58	75	59	74	-0.038	8.88	0.25
72	11.575	11.590	0.16	0.16	1.26	84	3.18	0.97	84	1.6	82	0.177	99	99	14.3	0	464	299	244	288	283	316	777	238	74	58	75	59	74	-0.039	9.09	0.25
73	11.738	11.751	0.16	0.16	1.26	85	3.17	0.97	84	1.6	82	0.175	101	100	14.2	-0.1	468	299	244	289	283	317	781	238	74	58	75	59	74	-0.039	9.14	0.25
74	11.899	11.912	0.16	0.16	1.25	85	3.17	0.97	85	1.6	82	0.176	99	99	14.1	-0.1	471	298	244	289	283	317	785	238	74	58	75	59	75	-0.039	9.2	0.25
75	12.060	12.075	0.16	0.16	1.26	85	3.19	0.96	85	1.6	82	0.178	99	100	14.1	0	474	298	244	290	283	318	789	239	74	58	75	59	75	-0.039	9.35	0.26
76	12.221	12.236	0.16	0.16	1.26	85	3.19	0.96	85	1.6	82	0.174	100	100	14.0	-0.1	478	298	244	290	283	319	794	240	75	58	75	59	75	-0.039	9.39	0.26
77	12.382	12.397	0.16	0.16	1.26	85	3.18	0.97	85	1.6	82	0.176	99	99	14.0	0	482	298	244	291	283	320	799	242	75	58	75	59	75	-0.039	9.55	0.26
78	12.543	12.557	0.16	0.16	1.26	85	3.19	0.97	85	1.6	82	0.177	99	98	13.9	-0.1	486	298	244	291	283	320	804	242	75	58	75	59	75	-0.039	9.59	0.26
79	12.705	12.720	0.16	0.16	1.26	85	3.19	0.97	85	1.6	82	0.176	100	100	13.8	-0.1	490	297	244	292	283	321	808	243	75	58	75	59	75	-0.039	9.66	0.26
80	12.868	12.881	0.16	0.16	1.27	85	3.2	0.97	85	1.6	82	0.179	100	98	13.8	0	494	297	244	292	283	322	814	244	75	58	75	59	75	-0.040	9.76	0.26
81	13.030	13.042	0.16	0.16	1.26	85	3.19	0.97	85	1.6	82	0.175	100	99	13.7	-0.1	499	297	245	293	284	324	819	245	75	58	75	59	75	-0.039	9.83	0.26
82	13.191	13.203	0.16	0.16	1.27	85	3.18	0.97	85	1.6	82	0.178	99	99	13.7	0	503	297	245	293	284	324	825	247	75	58	75	59	75	-0.040	9.96	0.27
83	13.353	13.365	0.16	0.16	1.27	85	3.2	0.97	85	1.6	82	0.176	100	100	13.6	-0.1	508	297	245	294	284	326	830	247	75	58	75	59	75	-0.040	9.98	0.27
84	13.514	13.526	0.16	0.16	1.27	85	3.19	0.97	85	1.6	82	0.176	99	99	13.5	-0.1	512	297	246	295	284	327	836	248	75	58	75	59	75	-0.040	10.1	0.27

Wood Heater Test Data

u

Run: 7

Manufacturer: Kuma Stoves
Model: K-251
Tracking No.: 2464
Project No.: 0123WM014E
Test Date: 11-May-23
Beginning Clock Time: 12:06

Total Sampling Time: 563 min
Recording Interval: 1 min
Tunnel Diameter: 6
Background Sample Volume: 95.509 cubic feet

PM Control Modules: 335,336
Dilution Tunnel MW(dry): 29.00 lb/lb-mole
Dilution Tunnel MW(wet): 28.78 lb/lb-mole
Dilution Tunnel H2O: 2.00 percent
Dilution Tunnel Static: -0.500 "H2O
Tunnel Area: 0.19635 ft2
Pitot Tube Cp: 0.99

Avg. Tunnel Velocity: 25.28 ft/sec.
Initial Tunnel Flow: 286.0 scfm
Average Tunnel Flow: 284.4 scfm
Post-Test Leak Check (1st Hr): 0.001 cfm @ 14 in. Hg
Post-Test Leak Check (1): 0.000 cfm @ 9 in. Hg
Post-Test Leak Check (2): 0.000 cfm @ 14 in. Hg
Average Test Piece Fuel Moisture: 19.98 Dry Basis %

Technician Signature:_____

Export to PDF

Meter Box Y Factor: 1.007 (1) 1.015 (2) 1.012 (Amb)

Barometric Pressure:	Begin	Middle	End	Average
	30.13	30.05	30.05	30.08

Room Air Velocity, fpn
<50

OMNI Equipment Numbers: _____

Velocity Traverse Data

	Pt.1	Pt.2	Pt.3	Pt.4	Pt.5	Pt.6	Pt.7	Pt.8	Center	
Initial dP	0.134	0.160	0.156	0.110	0.138	0.154	0.174	0.124	0.174	"H2O
Temp:	83	83	83	83	83	83	83	83	83	°F

V_{strav} 25.35 ft/sec V_{scent} 27.95 ft/sec F_p 0.907

qwq

	Particulate Sampling Data														Fuel Weight (lb)		Temperature Data (°F)													Stack Gas Data		
Elapsed Time (min)	Gas Meter 1 (ft^3)	Gas Meter 2 (ft^3)	Sample Rate 1 (cfm)	Sample Rate 2 (cfm)	Orifice dH 1 ("H_2O)	Meter 1 Temp (°F)	Meter 1 Vacuum ("Hg)	Orifice dH 2 ("H_2O)	Meter 2 Temp (°F)	Meter 2 Vacuum ("Hg)	Dilution Tunnel (°F)	Dilution Tunnel Center dP	Pro. Rate 1	Pro. Rate 2	Scale Reading	Weight Change	Firebox Top	Firebox Bottom	Firebox Back	Firebox Left	Firebox Right	Avg. Stove Surface (Tot = ΔT)	Catalyst Exit	Stack	Filter 1	Dryer Exit 1	Filter 2	Dryer Exit 2	Ambient	Draft ("H_2O)	CO_2 (%)	CO (%)
85	13.676	13.687	0.16	0.16	1.27	85	3.19	0.97	85	1.6	82	0.172	101	100	13.5	0	517	296	246	295	284	328	841	249	75	58	75	59	75	-0.040	10.11	0.27
86	13.838	13.849	0.16	0.16	1.26	85	3.2	0.97	85	1.6	82	0.176	100	100	13.4	-0.1	521	296	246	296	284	329	846	249	75	58	75	59	75	-0.041	10.33	0.27
87	14.000	14.011	0.16	0.16	1.27	85	3.19	0.97	85	1.6	82	0.177	100	99	13.3	-0.1	526	296	247	296	285	330	850	251	75	58	75	59	75	-0.041	10.19	0.27
88	14.162	14.172	0.16	0.16	1.26	85	3.2	0.97	85	1.6	83	0.175	100	99	13.3	0	530	296	247	297	285	331	855	251	75	58	75	60	75	-0.041	10.13	0.26
89	14.323	14.333	0.16	0.16	1.26	85	3.19	0.97	85	1.6	83	0.174	100	100	13.2	-0.1	534	296	247	298	285	332	859	252	75	58	75	60	75	-0.041	10.33	0.27
90	14.485	14.495	0.16	0.16	1.26	85	3.2	0.97	85	1.6	83	0.176	100	100	13.1	-0.1	538	295	248	298	285	333	863	253	75	58	75	60	75	-0.041	10.38	0.27
91	14.647	14.656	0.16	0.16	1.27	85	3.19	0.97	85	1.6	83	0.175	100	99	13.1	0	542	295	249	299	286	334	867	254	75	59	75	60	75	-0.041	10.49	0.27
92	14.808	14.817	0.16	0.16	1.27	85	3.19	0.97	85	1.6	83	0.177	99	99	13.0	-0.1	546	295	249	300	286	335	872	255	75	59	75	60	75	-0.041	10.61	0.28
93	14.971	14.979	0.16	0.16	1.26	85	3.2	0.97	85	1.6	83	0.175	101	100	13.0	0	550	295	250	301	286	336	876	256	75	59	75	60	75	-0.041	10.61	0.28
94	15.132	15.141	0.16	0.16	1.24	85	3.16	0.97	85	1.6	83	0.177	99	100	12.9	-0.1	554	295	251	302	286	338	881	256	75	59	75	60	75	-0.041	10.65	0.28
95	15.292	15.302	0.16	0.16	1.24	85	3.16	0.97	85	1.6	83	0.177	99	99	12.8	-0.1	558	295	251	302	287	339	885	257	75	59	75	60	75	-0.041	10.9	0.28
96	15.452	15.463	0.16	0.16	1.24	85	3.16	0.97	85	1.6	83	0.176	99	99	12.8	0	563	295	252	303	287	340	890	258	75	59	75	60	75	-0.041	11.05	0.29
97	15.613	15.625	0.16	0.16	1.24	85	3.17	0.97	85	1.6	83	0.177	99	100	12.7	-0.1	567	294	252	304	287	341	896	259	75	59	75	60	75	-0.041	11.15	0.29
98	15.773	15.787	0.16	0.16	1.24	86	3.16	0.97	85	1.6	83	0.176	99	100	12.6	-0.1	572	294	253	305	288	342	902	259	75	59	75	60	75	-0.041	11.29	0.29
99	15.934	15.948	0.16	0.16	1.24	86	3.17	0.97	85	1.6	83	0.176	99	99	12.6	0	577	294	254	306	288	344	908	261	75	59	75	60	75	-0.041	11.36	0.29
100	16.095	16.109	0.16	0.16	1.24	86	3.17	0.97	85	1.6	83	0.176	99	99	12.5	-0.1	581	294	254	307	289	345	913	261	75	59	75	60	75	-0.041	11.4	0.29
101	16.255	16.271	0.16	0.16	1.24	86	3.17	0.96	85	1.6	83	0.176	99	100	12.4	-0.1	586	294	255	308	289	346	918	263	75	59	75	60	75	-0.042	11.48	0.3
102	16.415	16.433	0.16	0.16	1.25	86	3.17	0.97	86	1.6	83	0.176	99	100	12.4	0	590	294	256	309	290	348	923	263	75	59	75	60	75	-0.042	11.46	0.3
103	16.576	16.594	0.16	0.16	1.24	86	3.16	0.97	86	1.6	84	0.178	99	99	12.3	-0.1	594	294	257	310	290	349	927	264	75	59	75	60	75	-0.042	11.44	0.29
104	16.737	16.755	0.16	0.16	1.24	86	3.16	0.97	86	1.6	84	0.175	100	99	12.2	-0.1	598	294	258	311	291	350	931	265	76	59	75	60	75	-0.042	11.39	0.29
105	16.897	16.917	0.16	0.16	1.24	86	3.17	0.96	86	1.6	84	0.175	99	100	12.2	0	602	294	259	313	291	352	934	266	76	59	75	60	75	-0.042	11.48	0.3
106	17.057	17.078	0.16	0.16	1.24	86	3.15	0.96	86	1.6	84	0.176	99	99	12.1	-0.1	605	294	260	313	292	353	937	266	76	59	75	60	75	-0.042	11.42	0.29
107	17.217	17.239	0.16	0.16	1.24	86	3.15	0.97	86	1.6	84	0.175	99	99	12.0	-0.1	608	293	261	315	292	354	940	267	76	59	75	60	75	-0.042	11.65	0.3
108	17.378	17.401	0.16	0.16	1.25	86	3.16	0.97	86	1.6	84	0.176	99	100	12.0	0	611	293	262	316	293	355	943	268	76	59	75	60	75	-0.043	11.7	0.3
109	17.540	17.563	0.16	0.16	1.25	86	3.17	0.97	86	1.6	84	0.176	100	100	11.9	-0.1	614	293	263	317	293	356	946	268	76	59	75	60	75	-0.043	11.7	0.3
110	17.700	17.724	0.16	0.16	1.24	86	3.16	0.97	86	1.6	84	0.175	99	99	11.8	-0.1	617	293	264	318	294	357	949	269	76	59	75	60	75	-0.043	11.59	0.29
111	17.860	17.885	0.16	0.16	1.24	86	3.16	0.97	86	1.6	84	0.176	99	99	11.8	0	620	293	265	319	294	358	952	270	76	59	75	60	75	-0.043	11.68	0.3
112	18.020	18.047	0.16	0.16	1.24	86	3.17	0.97	86	1.6	84	0.175	99	100	11.7	-0.1	623	293	266	320	295	359	955	270	76	59	75	60	75	-0.043	11.82	0.3
113	18.180	18.209	0.16	0.16	1.25	86	3.16	0.97	86	1.6	84	0.174	99	100	11.6	-0.1	626	293	267	322	296	361	958	271	76	59	76	60	75	-0.043	11.72	0.3
114	18.342	18.370	0.16	0.16	1.24	86	3.17	0.97	86	1.6	84	0.178	99	99	11.6	0	628	293	268	323	296	362	961	272	76	59	76	60	75	-0.043	11.95	0.3
115	18.502	18.531	0.16	0.16	1.24	86	3.16	0.97	86	1.6	84	0.175	99	99	11.5	-0.1	631	293	269	324	297	363	964	272	76	59	76	60	75	-0.043	12.04	0.3
116	18.662	18.694	0.16	0.16	1.24	86	3.17	0.97	86	1.6	84	0.175	99	101	11.4	-0.1	634	293	270	325	298	364	968	273	76	59	76	60	75	-0.043	12.23	0.3
117	18.822	18.855	0.16	0.16	1.24	86	3.16	0.96	86	1.6	84	0.175	99	99	11.3	-0.1	638	293	271	326	298	365	972	274	76	59	76	61	75	-0.043	12.35	0.31
118	18.983	19.016	0.16	0.16	1.25	86	3.16	0.97	86	1.6	85	0.175	100	99	11.3	0	642	293	271	327	299	366	978	274	76	59	76	61	75	-0.043	12.59	0.31
119	19.144	19.177	0.16	0.16	1.24	86	3.16	0.97	86	1.6	85	0.178	99	99	11.2	-0.1	646	293	273	329	300	368	983	276	76	59	76	61	75	-0.044	12.79	0.32
120	19.305	19.340	0.16	0.16	1.23	86	3.16	0.97	86	1.6	85	0.176	100	100	11.1	-0.1	651	293	274	330	301	370	989	277	76	59	76	61	75	-0.044	12.83	0.32
121	19.465	19.501	0.16	0.16	1.24	86	3.17	0.96	86	1.6	85	0.176	99	99	11.1	0	655	293	274	331	301	371	994	277	76	59	76	61	75	-0.044	12.98	0.32
122	19.625	19.662	0.16	0.16	1.25	86	3.17	0.97	86	1.6	85	0.175	99	99	11.0	-0.1	660	293	275	332	302	372	1000	278	76	59	76	61	75	-0.044	12.98	0.32
123	19.786	19.823	0.16	0.16	1.24	86	3.16	0.97	86	1.6	85	0.175	100	99	10.9	-0.1	664	293	276	333	303	374	1005	278	76	59	76	61	75	-0.044	12.96	0.32
124	19.947	19.986	0.16	0.16	1.24	86	3.16	0.97	86	1.6	85	0.175	100	101	10.8	-0.1	668	293	277	334	304	375	1008	280	76	59	76	61	75	-0.044	12.86	0.32
125	20.107	20.147	0.16	0.16	1.23	86	3.17	0.96	86	1.6	85	0.176	99	99	10.8	0	671	293	278	336	305	377	1010	280	76	59	76	61	75	-0.044	12.64	0.31
126	20.267	20.308	0.16	0.16	1.24	86	3.16	0.97	86	1.6	85	0.176	99	99	10.7	-0.1	673	293	279	337	306	378	1010	279	76	59	76	61	75	-0.044	12.4	0.31
127	20.427	20.469	0.16	0.16	1.24	86	3.17	0.97	86	1.6	85	0.175	99	99	10.6	-0.1	674	293	280	338	306	378	1010	279	76	59	76	61	75	-0.044	12.31	0.31
128	20.588	20.632	0.16	0.16	1.24	86	3.16	0.97	86	1.6	85	0.176	100	100	10.6	0	675	293	281	339	307	379	1009	279	76	59	76	61	75	-0.044	12.19	0.3

Wood Heater Test Data

u

Run: 7

Manufacturer: Kuma Stoves
Model: K-251
Tracking No.: 2464
Project No.: 0123WM014E
Test Date: 11-May-23
Beginning Clock Time: 12:06

Total Sampling Time: 563 min
Recording Interval: 1 min
Tunnel Diameter: 6
Background Sample Volume: 95.509 cubic feet

PM Control Modules: 335,336
Dilution Tunnel MW(dry): 29.00 lb/lb-mole
Dilution Tunnel MW(wet): 28.78 lb/lb-mole
Dilution Tunnel H2O: 2.00 percent
Dilution Tunnel Static: -0.500 "H2O
Tunnel Area: 0.19635 ft2
Pitot Tube Cp: 0.99

Avg. Tunnel Velocity: 25.28 ft/sec.
Initial Tunnel Flow: 286.0 scfm
Average Tunnel Flow: 284.4 scfm
Post-Test Leak Check (1st Hr): 0.001 cfm @ 14 in. Hg
Post-Test Leak Check (1): 0.000 cfm @ 9 in. Hg
Post-Test Leak Check (2): 0.000 cfm @ 14 in. Hg
Average Test Piece Fuel Moisture: 19.98 Dry Basis %

Technician Signature:_____

Meter Box Y Factor: 1.007 (1) 1.015 (2) 1.012 (Amb)

Export to PDF

Barometric Pressure:

Begin	Middle	End	Average
30.13	30.05	30.05	30.08

Room Air Velocity, fpn
<50

OMNI Equipment Numbers: _____

Velocity Traverse Data

	Pt.1	Pt.2	Pt.3	Pt.4	Pt.5	Pt.6	Pt.7	Pt.8	Center	
Initial dP	0.134	0.160	0.156	0.110	0.138	0.154	0.174	0.124	0.174	"H2O
Temp:	83	83	83	83	83	83	83	83	83	°F

V_{strav} 25.35 ft/sec V_{scent} 27.95 ft/sec F_p 0.907

qwq

	Particulate Sampling Data														Fuel Weight (lb)		Temperature Data (°F)													Stack Gas Data		
Elapsed Time (min)	Gas Meter 1 (ft^3)	Gas Meter 2 (ft^3)	Sample Rate 1 (cfm)	Sample Rate 2 (cfm)	Orifice dH 1 ("H_2O)	Meter 1 Temp (°F)	Meter 1 Vacuum ("Hg)	Orifice dH 2 ("H_2O)	Meter 2 Temp (°F)	Meter 2 Vacuum ("Hg)	Dilution Tunnel (°F)	Dilution Tunnel Center dP	Pro. Rate 1	Pro. Rate 2	Scale Reading	Weight Change	Firebox Top	Firebox Bottom	Firebox Back	Firebox Left	Firebox Right	Avg. Stove Surface (Tot = ΔT)	Catalyst Exit	Stack	Filter 1	Dryer Exit 1	Filter 2	Dryer Exit 2	Ambient	Draft ("H_2O)	CO_2 (%)	CO (%)
129	20.749	20.792	0.16	0.16	1.24	86	3.17	0.97	86	1.6	85	0.175	100	99	10.5	-0.1	675	293	282	340	308	380	1008	279	76	59	76	61	75	-0.044	12.04	0.29
130	20.910	20.954	0.16	0.16	1.23	86	3.16	0.97	86	1.6	85	0.174	100	100	10.4	-0.1	674	293	283	341	309	380	1006	278	76	59	76	61	75	-0.044	11.84	0.29
131	21.070	21.116	0.16	0.16	1.24	86	3.16	0.97	86	1.6	85	0.174	99	100	10.4	0	673	293	283	342	310	380	1003	277	76	59	76	61	75	-0.044	11.73	0.29
132	21.230	21.277	0.16	0.16	1.24	86	3.16	0.96	86	1.6	85	0.175	99	99	10.3	-0.1	672	293	284	343	311	381	1001	277	76	60	76	61	76	-0.043	11.63	0.28
133	21.391	21.438	0.16	0.16	1.24	86	3.16	0.97	86	1.6	86	0.176	100	99	10.2	-0.1	670	293	285	344	311	381	998	277	76	60	76	61	76	-0.043	11.58	0.28
134	21.552	21.599	0.16	0.16	1.24	86	3.16	0.97	86	1.6	86	0.176	100	99	10.2	0	668	293	286	345	312	381	996	276	76	60	76	61	76	-0.043	11.52	0.28
135	21.712	21.762	0.16	0.16	1.24	86	3.16	0.96	86	1.6	86	0.175	99	101	10.1	-0.1	666	293	287	346	313	381	994	275	76	60	76	61	75	-0.043	11.53	0.28
136	21.873	21.923	0.16	0.16	1.24	87	3.17	0.96	86	1.6	85	0.177	99	99	10.1	0	664	293	288	347	314	381	992	274	76	60	76	61	76	-0.043	11.54	0.28
137	22.033	22.082	0.16	0.16	1.24	87	3.16	0.95	86	1.6	86	0.175	99	98	10.0	-0.1	662	293	289	348	315	381	990	273	76	60	76	61	76	-0.043	11.45	0.28
138	22.193	22.243	0.16	0.16	1.24	87	3.16	0.96	86	1.6	85	0.175	99	99	9.9	-0.1	660	293	290	349	316	382	988	273	76	60	76	61	75	-0.043	11.5	0.28
139	22.354	22.404	0.16	0.16	1.24	87	3.17	0.96	86	1.6	86	0.176	99	99	9.9	0	658	293	291	350	316	382	986	272	77	60	76	61	76	-0.043	11.41	0.28
140	22.515	22.565	0.16	0.16	1.24	87	3.16	0.96	86	1.6	86	0.177	99	99	9.8	-0.1	656	293	292	350	317	382	984	271	77	60	76	61	76	-0.043	11.38	0.28
141	22.675	22.725	0.16	0.16	1.23	87	3.17	0.96	86	1.6	86	0.178	98	98	9.8	0	654	293	293	351	318	382	982	271	77	60	76	61	75	-0.042	11.34	0.28
142	22.836	22.887	0.16	0.16	1.24	87	3.16	0.96	86	1.6	86	0.174	100	100	9.7	-0.1	651	293	294	352	319	382	980	270	77	60	76	61	76	-0.043	11.19	0.27
143	22.996	23.047	0.16	0.16	1.24	87	3.16	0.96	86	1.6	86	0.174	99	99	9.7	0	649	293	294	353	319	382	977	269	77	60	76	61	76	-0.042	11.15	0.27
144	23.157	23.208	0.16	0.16	1.24	87	3.17	0.96	86	1.6	86	0.176	99	99	9.6	-0.1	647	293	296	354	320	382	974	268	77	60	76	61	76	-0.042	11.04	0.27
145	23.318	23.370	0.16	0.16	1.24	87	3.16	0.96	86	1.6	85	0.176	99	100	9.6	0	644	293	296	355	321	382	971	268	77	60	76	61	76	-0.042	11.04	0.27
146	23.478	23.531	0.16	0.16	1.24	87	3.17	0.95	87	1.6	86	0.174	99	100	9.5	-0.1	641	294	297	355	321	382	968	267	77	60	76	61	76	-0.041	11.01	0.27
147	23.639	23.691	0.16	0.16	1.24	87	3.17	0.96	86	1.6	86	0.174	100	99	9.4	-0.1	638	294	298	356	322	382	965	266	77	60	76	61	76	-0.042	10.93	0.26
148	23.799	23.852	0.16	0.16	1.24	87	3.17	0.96	87	1.6	85	0.175	99	99	9.4	0	636	293	299	357	323	382	962	265	77	60	76	61	76	-0.041	10.85	0.26
149	23.960	24.014	0.16	0.16	1.24	87	3.17	0.96	87	1.6	85	0.175	100	100	9.3	-0.1	633	294	300	358	323	382	959	264	77	60	76	61	76	-0.041	10.86	0.26
150	24.121	24.174	0.16	0.16	1.24	87	3.17	0.96	87	1.6	85	0.175	100	99	9.3	0	630	294	301	358	324	381	956	263	77	60	76	61	76	-0.041	10.79	0.26
151	24.281	24.335	0.16	0.16	1.23	87	3.16	0.96	87	1.6	85	0.176	99	99	9.2	-0.1	627	294	302	359	324	381	953	262	77	60	76	61	76	-0.041	10.83	0.26
152	24.441	24.497	0.16	0.16	1.24	87	3.17	0.96	87	1.6	85	0.176	99	100	9.2	0	624	294	302	360	325	381	951	261	77	60	76	61	76	-0.041	10.77	0.26
153	24.602	24.658	0.16	0.16	1.24	87	3.17	0.96	87	1.6	85	0.174	100	100	9.1	-0.1	622	294	303	360	325	381	949	260	77	60	76	61	76	-0.041	10.73	0.25
154	24.762	24.818	0.16	0.16	1.24	87	3.16	0.96	87	1.6	85	0.176	99	98	9.1	0	619	294	304	361	326	381	947	259	77	60	76	61	76	-0.041	10.7	0.25
155	24.924	24.979	0.16	0.16	1.24	87	3.17	0.96	87	1.6	85	0.174	101	100	9.0	-0.1	617	294	305	362	326	381	944	259	77	60	76	61	76	-0.041	10.67	0.25
156	25.084	25.141	0.16	0.16	1.23	87	3.17	0.96	87	1.6	85	0.176	99	100	9.0	0	614	294	306	362	327	381	942	258	77	60	76	61	76	-0.041	10.73	0.25
157	25.244	25.301	0.16	0.16	1.24	87	3.16	0.96	87	1.6	86	0.171	100	100	8.9	-0.1	612	295	307	363	327	381	940	258	77	60	76	61	76	-0.040	10.73	0.25
158	25.404	25.462	0.16	0.16	1.24	87	3.16	0.96	87	1.6	86	0.176	99	99	8.9	0	610	295	307	364	328	381	939	258	77	60	76	61	76	-0.040	10.81	0.25
159	25.565	25.623	0.16	0.16	1.24	87	3.16	0.96	87	1.6	85	0.174	100	100	8.8	-0.1	608	295	308	364	328	381	938	257	77	60	76	61	76	-0.040	10.75	0.25
160	25.727	25.784	0.16	0.16	1.24	87	3.17	0.96	87	1.6	86	0.175	100	99	8.8	0	606	295	309	365	329	381	937	256	77	60	76	61	76	-0.040	10.83	0.25
161	25.887	25.945	0.16	0.16	1.24	87	3.17	0.96	87	1.6	85	0.175	99	99	8.7	-0.1	605	295	309	365	329	381	936	255	77	60	76	61	76	-0.040	10.91	0.26
162	26.047	26.106	0.16	0.16	1.24	87	3.16	0.96	87	1.6	85	0.177	98	99	8.7	0	603	295	310	366	329	381	936	255	77	60	76	61	76	-0.040	10.86	0.26
163	26.207	26.267	0.16	0.16	1.24	87	3.16	0.96	87	1.6	85	0.175	99	99	8.6	-0.1	602	295	311	366	330	381	935	255	77	60	76	61	76	-0.040	10.89	0.25
164	26.368	26.428	0.16	0.16	1.24	87	3.16	0.96	87	1.6	85	0.175	100	99	8.6	0	601	295	311	367	330	381	935	254	77	60	76	61	76	-0.040	10.85	0.25
165	26.529	26.589	0.16	0.16	1.24	87	3.16	0.96	87	1.6	85	0.176	99	99	8.5	-0.1	600	295	312	367	331	381	934	254	77	60	76	61	76	-0.039	10.85	0.25
166	26.690	26.750	0.16	0.16	1.24	87	3.17	0.96	87	1.6	85	0.175	100	99	8.5	0	599	295	313	368	331	381	934	254	77	60	77	61	76	-0.040	10.96	0.26
167	26.850	26.911	0.16	0.16	1.24	87	3.17	0.96	87	1.6	85	0.177	98	99	8.4	-0.1	598	296	313	368	331	381	934	253	77	60	77	61	76	-0.039	10.93	0.26
168	27.010	27.071	0.16	0.16	1.24	87	3.16	0.96	87	1.6	86	0.175	99	99	8.4	0	598	296	314	369	332	382	934	253	77	60	77	61	76	-0.039	10.94	0.25
169	27.171	27.232	0.16	0.16	1.24	87	3.17	0.96	87	1.6	85	0.176	99	99	8.3	-0.1	597	296	314	369	332	382	934	253	77	60	77	61	76	-0.039	10.89	0.25
170	27.332	27.394	0.16	0.16	1.24	87	3.17	0.96	87	1.6	85	0.176	99	100	8.3	0	596	296	315	369	333	382	934	252	77	60	77	61	76	-0.039	10.92	0.25
171	27.493	27.555	0.16	0.16	1.24	87	3.17	0.96	87	1.6	85	0.175	100	99	8.2	-0.1	595	296	315	370	333	382	933	252	77	60	77	61	76	-0.039	10.96	0.25
172	27.653	27.715	0.16	0.16	1.23	87	3.18	0.96	87	1.6	85	0.176	99	98	8.2	0	594	296	316	370	333	382	933	251	77	60	77	61	76	-0.039	11.06	0.26

Wood Heater Test Data

u

Run: 7

Manufacturer: Kuma Stoves
Model: K-251
Tracking No.: 2464
Project No.: 0123WM014E
Test Date: 11-May-23
Beginning Clock Time: 12:06

Total Sampling Time: 563 min
Recording Interval: 1 min
Tunnel Diameter: 6
Background Sample Volume: 95.509 cubic feet

PM Control Modules: 335,336
Dilution Tunnel MW(dry): 29.00 lb/lb-mole
Dilution Tunnel MW(wet): 28.78 lb/lb-mole
Dilution Tunnel H2O: 2.00 percent
Dilution Tunnel Static: -0.500 "H2O
Tunnel Area: 0.19635 ft2
Pitot Tube Cp: 0.99

Avg. Tunnel Velocity: 25.28 ft/sec.
Initial Tunnel Flow: 286.0 scfm
Average Tunnel Flow: 284.4 scfm
Post-Test Leak Check (1st Hr): 0.001 cfm @ 14 in. Hg
Post-Test Leak Check (1): 0.000 cfm @ 9 in. Hg
Post-Test Leak Check (2): 0.000 cfm @ 14 in. Hg
Average Test Piece Fuel Moisture: 19.98 Dry Basis %

Technician Signature:_____

Meter Box Y Factor: 1.007 (1) 1.015 (2) 1.012 (Amb)

Barometric Pressure:

Begin	Middle	End	Average
30.13	30.05	30.05	30.08

Room Air Velocity, fpn
<50

OMNI Equipment Numbers: _____

Velocity Traverse Data

	Pt.1	Pt.2	Pt.3	Pt.4	Pt.5	Pt.6	Pt.7	Pt.8	Center	
Initial dP	0.134	0.160	0.156	0.110	0.138	0.154	0.174	0.124	0.174	"H2O
Temp:	83	83	83	83	83	83	83	83	83	°F

V_{strav} 25.35 ft/sec V_{scent} 27.95 ft/sec F_p 0.907

qwq

	Particulate Sampling Data														Fuel Weight (lb)		Temperature Data (°F)													Stack Gas Data		
Elapsed Time (min)	Gas Meter 1 (ft^3)	Gas Meter 2 (ft^3)	Sample Rate 1 (cfm)	Sample Rate 2 (cfm)	Orifice dH 1 ("H_2O)	Meter 1 Temp (°F)	Meter 1 Vacuum ("Hg)	Orifice dH 2 ("H_2O)	Meter 2 Temp (°F)	Meter 2 Vacuum ("Hg)	Dilution Tunnel (°F)	Dilution Tunnel Center dP	Pro. Rate 1	Pro. Rate 2	Scale Reading	Weight Change	Firebox Top	Firebox Bottom	Firebox Back	Firebox Left	Firebox Right	Avg. Stove Surface (Tot = ΔT)	Catalyst Exit	Stack	Filter 1	Dryer Exit 1	Filter 2	Dryer Exit 2	Ambient	Draft ("H_2O)	CO_2 (%)	CO (%)
173	27.814	27.877	0.16	0.16	1.24	87	3.16	0.96	87	1.6	85	0.176	99	100	8.1	-0.1	594	296	317	370	334	382	933	251	77	60	77	61	76	-0.039	10.94	0.25
174	27.974	28.038	0.16	0.16	1.24	87	3.16	0.96	87	1.6	85	0.174	99	100	8.1	0	593	296	317	371	334	382	932	250	77	60	77	61	76	-0.039	10.88	0.25
175	28.135	28.198	0.16	0.16	1.24	87	3.17	0.96	87	1.6	85	0.176	99	98	8.0	-0.1	592	297	318	371	334	382	931	251	77	60	77	61	76	-0.039	10.96	0.26
176	28.296	28.359	0.16	0.16	1.24	87	3.17	0.96	87	1.6	85	0.175	100	99	8.0	0	592	297	318	372	335	383	931	250	77	60	77	61	76	-0.039	10.95	0.26
177	28.456	28.521	0.16	0.16	1.23	87	3.17	0.96	87	1.6	85	0.176	99	100	7.9	-0.1	591	297	318	372	336	383	930	250	77	60	77	61	76	-0.039	10.92	0.26
178	28.616	28.681	0.16	0.16	1.24	87	3.17	0.96	87	1.6	85	0.173	100	99	7.9	0	591	297	319	372	336	383	929	249	77	60	77	61	76	-0.039	10.98	0.26
179	28.777	28.842	0.16	0.16	1.24	87	3.17	0.95	87	1.6	85	0.175	100	99	7.8	-0.1	590	297	320	373	336	383	929	249	77	60	77	61	76	-0.039	10.94	0.26
180	28.937	29.004	0.16	0.16	1.24	87	3.17	0.96	87	1.6	85	0.176	99	100	7.8	0	589	297	320	373	337	383	928	249	77	60	77	61	76	-0.039	11.01	0.26
181	29.099	29.165	0.16	0.16	1.24	87	3.17	0.96	87	1.6	85	0.173	101	100	7.7	-0.1	589	297	321	373	337	383	928	249	77	60	77	61	76	-0.038	11.07	0.26
182	29.259	29.325	0.16	0.16	1.23	87	3.17	0.96	87	1.6	85	0.174	99	99	7.7	0	588	297	321	374	338	384	928	248	77	60	77	61	76	-0.039	11.18	0.26
183	29.419	29.486	0.16	0.16	1.24	87	3.16	0.96	87	1.6	85	0.174	99	100	7.7	0	588	298	322	374	338	384	929	249	77	60	77	61	76	-0.039	11.16	0.26
184	29.579	29.648	0.16	0.16	1.24	87	3.16	0.96	87	1.6	85	0.176	99	100	7.6	-0.1	588	298	322	374	339	384	930	249	77	60	77	61	76	-0.039	11.29	0.26
185	29.740	29.808	0.16	0.16	1.24	87	3.16	0.96	87	1.6	85	0.175	100	99	7.6	0	589	298	323	374	339	385	931	249	77	60	77	61	76	-0.039	11.38	0.26
186	29.902	29.969	0.16	0.16	1.24	87	3.17	0.96	87	1.6	85	0.173	101	100	7.5	-0.1	589	298	323	375	339	385	932	249	77	60	77	61	76	-0.039	11.45	0.27
187	30.062	30.131	0.16	0.16	1.23	87	3.16	0.96	87	1.6	85	0.174	99	100	7.5	0	590	298	324	375	340	385	934	249	77	60	77	61	76	-0.039	11.57	0.27
188	30.222	30.292	0.16	0.16	1.24	87	3.16	0.96	87	1.6	85	0.174	99	100	7.4	-0.1	592	298	324	375	340	386	936	250	77	60	77	61	76	-0.039	11.76	0.28
189	30.382	30.452	0.16	0.16	1.24	87	3.17	0.96	87	1.6	85	0.178	98	98	7.3	-0.1	594	299	325	375	341	387	940	250	77	60	77	61	76	-0.039	11.84	0.28
190	30.543	30.613	0.16	0.16	1.24	88	3.17	0.96	87	1.6	85	0.175	99	99	7.3	0	596	299	326	376	341	388	943	251	77	60	77	61	76	-0.039	12.05	0.28
191	30.704	30.775	0.16	0.16	1.24	88	3.17	0.96	87	1.6	85	0.176	99	100	7.2	-0.1	598	299	326	376	341	388	946	251	77	60	77	61	76	-0.039	12.16	0.29
192	30.865	30.935	0.16	0.16	1.23	87	3.16	0.96	87	1.6	85	0.175	100	99	7.2	0	601	299	327	376	342	389	950	252	77	60	77	61	76	-0.039	12.22	0.29
193	31.025	31.096	0.16	0.16	1.24	88	3.17	0.96	87	1.6	85	0.175	99	99	7.1	-0.1	604	299	328	376	342	390	954	253	77	60	77	61	76	-0.039	12.52	0.29
194	31.185	31.258	0.16	0.16	1.24	88	3.17	0.96	87	1.6	85	0.173	99	100	7.1	0	607	299	328	377	343	391	959	253	77	60	77	61	77	-0.039	12.71	0.3
195	31.345	31.419	0.16	0.16	1.24	88	3.17	0.96	87	1.6	85	0.175	99	99	7.0	-0.1	611	299	329	377	343	392	964	254	77	60	77	61	77	-0.039	12.58	0.3
196	31.507	31.579	0.16	0.16	1.24	88	3.17	0.96	87	1.6	86	0.171	101	100	7.0	0	614	300	330	377	344	393	967	254	77	60	77	61	76	-0.039	12.39	0.3
197	31.667	31.740	0.16	0.16	1.24	88	3.16	0.96	87	1.6	86	0.176	99	99	6.9	-0.1	617	300	330	377	344	394	969	255	77	60	77	61	77	-0.039	12.26	0.29
198	31.828	31.902	0.16	0.16	1.23	88	3.18	0.96	87	1.6	86	0.172	100	101	6.8	-0.1	620	300	331	378	344	395	971	254	77	60	77	61	77	-0.039	12.36	0.3
199	31.988	32.062	0.16	0.16	1.24	88	3.16	0.96	87	1.6	86	0.175	99	99	6.8	0	623	300	332	378	345	396	974	255	77	60	77	61	77	-0.039	12.3	0.3
200	32.149	32.223	0.16	0.16	1.24	88	3.17	0.96	87	1.6	86	0.175	100	99	6.7	-0.1	625	300	333	378	345	396	975	254	77	60	77	61	77	-0.039	12.18	0.3
201	32.310	32.385	0.16	0.16	1.24	88	3.17	0.96	87	1.6	86	0.176	99	100	6.7	0	627	300	333	378	346	397	977	255	77	60	77	61	77	-0.039	12.14	0.29
202	32.471	32.546	0.16	0.16	1.24	88	3.17	0.95	87	1.6	86	0.175	100	99	6.6	-0.1	629	300	334	378	346	397	978	255	77	60	77	61	77	-0.039	12.28	0.3
203	32.631	32.706	0.16	0.16	1.23	88	3.17	0.96	87	1.6	86	0.176	99	98	6.6	0	630	301	335	379	347	398	979	255	77	60	77	61	77	-0.039	12.15	0.3
204	32.791	32.867	0.16	0.16	1.23	88	3.16	0.96	87	1.6	86	0.174	99	100	6.5	-0.1	631	301	335	379	347	399	979	256	77	60	77	61	77	-0.039	12.29	0.3
205	32.952	33.029	0.16	0.16	1.24	88	3.16	0.96	87	1.6	86	0.177	99	99	6.5	0	632	301	336	379	347	399	980	255	77	60	77	61	77	-0.039	12.37	0.3
206	33.112	33.189	0.16	0.16	1.24	88	3.16	0.96	87	1.6	86	0.175	99	99	6.4	-0.1	633	301	337	380	348	400	980	255	77	60	77	61	77	-0.039	11.99	0.3
207	33.274	33.350	0.16	0.16	1.24	88	3.16	0.96	87	1.6	86	0.176	100	99	6.4	0	633	301	337	380	348	400	980	254	77	60	77	61	77	-0.039	10.89	0.27
208	33.434	33.512	0.16	0.16	1.23	88	3.17	0.96	87	1.6	86	0.175	99	100	6.3	-0.1	632	301	338	380	349	400	978	255	77	60	77	61	77	-0.039	11.98	0.3
209	33.594	33.672	0.16	0.16	1.24	88	3.16	0.95	88	1.6	86	0.175	99	99	6.3	0	631	301	338	381	349	400	977	254	77	60	77	61	77	-0.039	12.13	0.3
210	33.754	33.833	0.16	0.16	1.24	88	3.16	0.96	87	1.6	86	0.175	99	99	6.2	-0.1	631	301	339	381	350	400	976	254	77	60	77	61	77	-0.039	12.18	0.3
211	33.915	33.994	0.16	0.16	1.24	88	3.16	0.96	87	1.6	86	0.175	100	99	6.2	0	630	301	339	382	350	400	975	254	77	60	77	61	77	-0.038	12.28	0.3
212	34.077	34.155	0.16	0.16	1.24	88	3.16	0.96	88	1.6	86	0.176	100	99	6.2	0	630	302	340	382	351	401	975	254	77	60	77	61	77	-0.039	12.22	0.3
213	34.237	34.316	0.16	0.16	1.23	88	3.17	0.96	88	1.6	86	0.175	99	99	6.1	-0.1	630	302	340	383	351	401	976	253	77	60	77	61	77	-0.039	12.17	0.29
214	34.397	34.477	0.16	0.16	1.24	88	3.17	0.96	88	1.6	86	0.174	99	99	6.1	0	630	302	341	383	352	402	976	254	77	60	77	61	77	-0.039	12.31	0.3
215	34.557	34.639	0.16	0.16	1.24	88	3.17	0.95	88	1.6	86	0.176	99	100	6.0	-0.1	629	302	341	383	352	401	975	253	77	60	77	61	77	-0.039	12.31	0.3
216	34.718	34.799	0.16	0.16	1.24	88	3.17	0.96	88	1.6	86	0.174	100	99	6.0	0	629	302	342	384	353	402	975	253	78	60	77	61	77	-0.039	12.36	0.3

Wood Heater Test Data

u

Run: 7

Manufacturer: Kuma Stoves
Model: K-251
Tracking No.: 2464
Project No.: 0123WM014E
Test Date: 11-May-23
Beginning Clock Time: 12:06

Total Sampling Time: 563 min
Recording Interval: 1 min
Tunnel Diameter: 6
Background Sample Volume: 95.509 cubic feet

PM Control Modules: 335,336
Dilution Tunnel MW(dry): 29.00 lb/lb-mole
Dilution Tunnel MW(wet): 28.78 lb/lb-mole
Dilution Tunnel H2O: 2.00 percent
Dilution Tunnel Static: -0.500 "H2O
Tunnel Area: 0.19635 ft2
Pitot Tube Cp: 0.99

Avg. Tunnel Velocity: 25.28 ft/sec.
Initial Tunnel Flow: 286.0 scfm
Average Tunnel Flow: 284.4 scfm
Post-Test Leak Check (1st Hr): 0.001 cfm @ 14 in. Hg
Post-Test Leak Check (1): 0.000 cfm @ 9 in. Hg
Post-Test Leak Check (2): 0.000 cfm @ 14 in. Hg
Average Test Piece Fuel Moisture: 19.98 Dry Basis %

Technician Signature:_____

Meter Box Y Factor: 1.007 (1) 1.015 (2) 1.012 (Amb)

Barometric Pressure:

Begin	Middle	End	Average
30.13	30.05	30.05	30.08

Room Air Velocity, fpn
<50

OMNI Equipment Numbers: _____

Velocity Traverse Data

	Pt.1	Pt.2	Pt.3	Pt.4	Pt.5	Pt.6	Pt.7	Pt.8	Center	
Initial dP	0.134	0.160	0.156	0.110	0.138	0.154	0.174	0.124	0.174	"H2O
Temp:	83	83	83	83	83	83	83	83	83	°F

V_{strav} 25.35 ft/sec V_{scent} 27.95 ft/sec F_p 0.907

qwq

	Particulate Sampling Data														Fuel Weight (lb)		Temperature Data (°F)													Stack Gas Data		
Elapsed Time (min)	Gas Meter 1 (ft^3)	Gas Meter 2 (ft^3)	Sample Rate 1 (cfm)	Sample Rate 2 (cfm)	Orifice dH 1 ("H_2O)	Meter 1 Temp (°F)	Meter 1 Vacuum ("Hg)	Orifice dH 2 ("H_2O)	Meter 2 Temp (°F)	Meter 2 Vacuum ("Hg)	Dilution Tunnel (°F)	Dilution Tunnel Center dP	Pro. Rate 1	Pro. Rate 2	Scale Reading	Weight Change	Firebox Top	Firebox Bottom	Firebox Back	Firebox Left	Firebox Right	Avg. Stove Surface (Tot = ΔT)	Catalyst Exit	Stack	Filter 1	Dryer Exit 1	Filter 2	Dryer Exit 2	Ambient	Draft ("H_2O)	CO_2 (%)	CO (%)
217	34.879	34.960	0.16	0.16	1.24	88	3.16	0.96	88	1.6	86	0.175	100	99	5.9	-0.1	628	302	342	385	353	402	974	253	78	60	77	61	77	-0.039	12.35	0.3
218	35.040	35.121	0.16	0.16	1.23	88	3.18	0.96	88	1.6	86	0.174	100	99	5.9	0	628	302	343	385	354	402	974	253	78	60	77	61	77	-0.039	12.29	0.3
219	35.200	35.283	0.16	0.16	1.24	88	3.17	0.96	88	1.6	86	0.174	99	100	5.8	-0.1	627	302	343	386	354	402	973	252	78	60	77	61	77	-0.039	12.28	0.3
220	35.360	35.443	0.16	0.16	1.24	88	3.17	0.96	88	1.6	86	0.173	99	99	5.8	0	627	302	343	386	355	403	973	253	78	60	77	61	77	-0.038	12.22	0.3
221	35.520	35.604	0.16	0.16	1.24	88	3.17	0.96	88	1.6	86	0.174	99	99	5.7	-0.1	626	302	344	387	355	403	972	252	78	60	77	61	77	-0.039	12.18	0.3
222	35.682	35.766	0.16	0.16	1.24	88	3.16	0.96	88	1.6	86	0.173	101	100	5.7	0	626	303	345	387	356	403	972	252	78	60	77	61	77	-0.039	12.28	0.3
223	35.842	35.927	0.16	0.16	1.24	88	3.16	0.96	88	1.6	86	0.175	99	99	5.6	-0.1	625	303	345	388	356	403	971	252	78	60	77	61	77	-0.039	12.29	0.3
224	36.003	36.087	0.16	0.16	1.24	88	3.16	0.96	88	1.6	86	0.175	100	99	5.6	0	625	303	345	388	357	404	971	252	78	60	77	61	77	-0.039	12.31	0.3
225	36.163	36.248	0.16	0.16	1.23	88	3.18	0.96	88	1.6	86	0.175	99	99	5.5	-0.1	625	303	346	389	357	404	971	253	78	60	77	61	77	-0.039	12.39	0.3
226	36.323	36.410	0.16	0.16	1.24	88	3.17	0.96	88	1.6	87	0.174	99	100	5.5	0	624	303	346	389	358	404	971	252	78	60	77	61	77	-0.039	12.33	0.3
227	36.484	36.570	0.16	0.16	1.24	88	3.16	0.96	88	1.6	86	0.174	100	99	5.4	-0.1	624	303	347	389	358	404	971	252	78	60	77	62	77	-0.039	12.42	0.3
228	36.645	36.731	0.16	0.16	1.24	88	3.16	0.96	88	1.6	86	0.174	100	99	5.4	0	624	303	347	390	359	405	972	253	78	60	77	62	77	-0.038	12.43	0.3
229	36.806	36.893	0.16	0.16	1.23	88	3.16	0.96	88	1.6	86	0.175	100	100	5.3	-0.1	624	303	348	390	359	405	972	252	78	60	77	62	77	-0.039	12.54	0.3
230	36.966	37.054	0.16	0.16	1.24	88	3.16	0.96	88	1.6	86	0.173	99	100	5.3	0	625	303	348	391	359	405	973	252	78	60	77	61	77	-0.039	12.51	0.3
231	37.126	37.214	0.16	0.16	1.23	88	3.17	0.96	88	1.6	86	0.175	99	99	5.2	-0.1	625	304	349	391	360	406	974	252	78	60	77	62	77	-0.038	12.44	0.3
232	37.287	37.376	0.16	0.16	1.24	88	3.17	0.96	88	1.6	86	0.175	100	100	5.2	0	626	304	349	391	360	406	975	253	78	60	77	62	77	-0.039	12.54	0.3
233	37.449	37.537	0.16	0.16	1.24	88	3.17	0.96	88	1.6	86	0.174	100	99	5.1	-0.1	627	304	349	392	361	407	977	253	78	60	77	62	77	-0.039	12.59	0.3
234	37.609	37.698	0.16	0.16	1.23	88	3.18	0.96	88	1.6	86	0.174	99	99	5.1	0	628	304	349	392	361	407	978	253	78	60	77	62	77	-0.039	12.48	0.3
235	37.769	37.859	0.16	0.16	1.23	88	3.18	0.96	88	1.6	86	0.173	99	100	5.0	-0.1	628	304	350	392	362	407	978	253	78	60	77	62	77	-0.039	12.4	0.3
236	37.929	38.021	0.16	0.16	1.23	88	3.16	0.96	88	1.6	86	0.176	99	100	5.0	0	628	304	350	393	362	407	978	253	78	60	77	62	77	-0.039	12.37	0.3
237	38.090	38.181	0.16	0.16	1.24	88	3.18	0.95	88	1.6	86	0.176	99	98	4.9	-0.1	628	304	350	393	363	408	978	253	78	60	77	62	77	-0.038	12.33	0.3
238	38.252	38.342	0.16	0.16	1.24	88	3.17	0.95	88	1.6	86	0.174	100	99	4.9	0	628	304	351	393	363	408	978	252	78	60	77	62	77	-0.039	12.37	0.3
239	38.412	38.503	0.16	0.16	1.23	88	3.18	0.96	88	1.6	87	0.174	99	100	4.8	-0.1	628	305	351	393	364	408	977	252	78	60	77	62	77	-0.038	12.36	0.3
240	38.572	38.665	0.16	0.16	1.24	88	3.16	0.96	88	1.6	86	0.174	99	100	4.8	0	627	305	352	394	364	408	976	251	78	60	77	62	77	-0.038	12.34	0.3
241	38.732	38.825	0.16	0.16	1.24	88	3.18	0.96	88	1.6	86	0.174	99	99	4.7	-0.1	627	305	352	394	365	409	975	251	78	60	77	62	77	-0.039	12.35	0.3
242	38.893	38.986	0.16	0.16	1.24	88	3.18	0.95	88	1.6	86	0.172	100	100	4.7	0	626	305	353	394	365	409	975	251	78	60	77	62	77	-0.038	12.38	0.3
243	39.055	39.148	0.16	0.16	1.23	88	3.17	0.95	88	1.6	86	0.173	101	100	4.6	-0.1	626	305	353	394	366	409	976	251	78	60	77	62	77	-0.038	12.44	0.3
244	39.215	39.309	0.16	0.16	1.23	88	3.16	0.95	88	1.6	86	0.174	99	99	4.6	0	627	305	353	394	366	409	977	250	78	60	77	62	77	-0.038	12.65	0.31
245	39.375	39.469	0.16	0.16	1.23	88	3.18	0.96	88	1.6	86	0.172	100	99	4.5	-0.1	627	305	354	394	367	409	979	250	78	60	77	62	77	-0.038	12.74	0.34
246	39.535	39.630	0.16	0.16	1.23	88	3.18	0.96	88	1.6	86	0.173	99	100	4.5	0	628	306	354	395	367	410	980	250	78	60	77	62	78	-0.039	12.8	0.34
247	39.696	39.792	0.16	0.16	1.24	88	3.17	0.96	88	1.6	86	0.173	100	100	4.4	-0.1	628	306	354	395	368	410	982	250	78	60	77	62	78	-0.038	12.72	0.35
248	39.857	39.952	0.16	0.16	1.24	88	3.17	0.96	88	1.6	86	0.174	100	99	4.4	0	628	306	354	395	368	410	983	250	78	60	77	62	78	-0.038	12.84	0.36
249	40.018	40.113	0.16	0.16	1.23	88	3.16	0.96	88	1.6	86	0.172	100	100	4.3	-0.1	629	306	355	395	369	411	983	250	78	60	77	62	78	-0.038	12.91	0.37
250	40.178	40.275	0.16	0.16	1.23	88	3.17	0.95	88	1.6	86	0.173	99	100	4.3	0	628	306	355	395	369	411	983	249	78	60	77	62	77	-0.038	12.76	0.4
251	40.338	40.436	0.16	0.16	1.24	88	3.16	0.95	88	1.6	86	0.175	99	99	4.3	0	628	306	355	395	370	411	983	249	78	60	77	62	78	-0.037	12.56	0.35
252	40.498	40.597	0.16	0.16	1.23	88	3.17	0.96	88	1.6	86	0.173	99	100	4.2	-0.1	627	307	355	396	371	411	982	248	78	60	77	62	78	-0.037	12.49	0.38
253	40.660	40.757	0.16	0.16	1.24	88	3.16	0.96	88	1.6	86	0.172	101	99	4.2	0	626	307	355	396	371	411	981	248	78	60	77	62	78	-0.037	12.43	0.37
254	40.820	40.919	0.16	0.16	1.23	88	3.16	0.96	88	1.6	86	0.173	99	100	4.1	-0.1	625	307	356	396	372	411	979	247	78	60	78	62	78	-0.037	12.21	0.37
255	40.981	41.080	0.16	0.16	1.23	88	3.17	0.96	88	1.6	86	0.175	100	99	4.1	0	623	307	356	396	373	411	977	247	78	60	78	62	78	-0.037	12.22	0.35
256	41.141	41.241	0.16	0.16	1.24	88	3.16	0.96	88	1.6	86	0.171	100	100	4.0	-0.1	621	307	355	396	373	410	975	246	78	60	78	62	78	-0.037	12.12	0.34
257	41.301	41.403	0.16	0.16	1.23	88	3.17	0.95	88	1.6	86	0.171	100	101	4.0	0	619	308	356	396	374	411	972	246	78	60	78	62	78	-0.037	12.06	0.33
258	41.462	41.564	0.16	0.16	1.24	88	3.17	0.95	88	1.6	86	0.174	100	99	4.0	0	617	308	356	397	374	410	970	244	78	60	78	62	78	-0.037	11.93	0.32
259	41.623	41.724	0.16	0.16	1.24	88	3.16	0.96	88	1.6	86	0.175	100	99	3.9	-0.1	615	308	356	397	375	410	967	244	78	60	78	62	78	-0.037	11.92	0.32
260	41.784	41.885	0.16	0.16	1.23	88	3.17	0.96	88	1.6	86	0.173	100	100	3.9	0	613	308	356	397	376	410	964	244	78	60	78	62	78	-0.036	11.87	0.31

Wood Heater Test Data

u

Run: 7

Manufacturer: Kuma Stoves
Model: K-251
Tracking No.: 2464
Project No.: 0123WM014E
Test Date: 11-May-23
Beginning Clock Time: 12:06

Total Sampling Time: 563 min
Recording Interval: 1 min
Tunnel Diameter: 6
Background Sample Volume: 95.509 cubic feet

PM Control Modules: 335,336
Dilution Tunnel MW(dry): 29.00 lb/lb-mole
Dilution Tunnel MW(wet): 28.78 lb/lb-mole
Dilution Tunnel H2O: 2.00 percent
Dilution Tunnel Static: -0.500 "H2O
Tunnel Area: 0.19635 ft2
Pitot Tube Cp: 0.99

Avg. Tunnel Velocity: 25.28 ft/sec.
Initial Tunnel Flow: 286.0 scfm
Average Tunnel Flow: 284.4 scfm
Post-Test Leak Check (1st Hr): 0.001 cfm @ 14 in. Hg
Post-Test Leak Check (1): 0.000 cfm @ 9 in. Hg
Post-Test Leak Check (2): 0.000 cfm @ 14 in. Hg
Average Test Piece Fuel Moisture: 19.98 Dry Basis %

Technician Signature:_____

Meter Box Y Factor: 1.007 (1) 1.015 (2) 1.012 (Amb)

Export to PDF

Barometric Pressure:	Begin	Middle	End	Average
	30.13	30.05	30.05	30.08

Room Air Velocity, fpn
<50

OMNI Equipment Numbers: _____

Velocity Traverse Data

	Pt.1	Pt.2	Pt.3	Pt.4	Pt.5	Pt.6	Pt.7	Pt.8	Center	
Initial dP	0.134	0.160	0.156	0.110	0.138	0.154	0.174	0.124	0.174	"H2O
Temp:	83	83	83	83	83	83	83	83	83	°F

V_{strav} 25.35 ft/sec V_{scent} 27.95 ft/sec F_p 0.907

qwq

	Particulate Sampling Data														Fuel Weight (lb)		Temperature Data (°F)													Stack Gas Data		
Elapsed Time (min)	Gas Meter 1 (ft^3)	Gas Meter 2 (ft^3)	Sample Rate 1 (cfm)	Sample Rate 2 (cfm)	Orifice dH 1 ("H_2O)	Meter 1 Temp (°F)	Meter 1 Vacuum ("Hg)	Orifice dH 2 ("H_2O)	Meter 2 Temp (°F)	Meter 2 Vacuum ("Hg)	Dilution Tunnel (°F)	Dilution Tunnel Center dP	Pro. Rate 1	Pro. Rate 2	Scale Reading	Weight Change	Firebox Top	Firebox Bottom	Firebox Back	Firebox Left	Firebox Right	Avg. Stove Surface (Tot = ΔT)	Catalyst Exit	Stack	Filter 1	Dryer Exit 1	Filter 2	Dryer Exit 2	Ambient	Draft ("H_2O)	CO_2 (%)	CO (%)
261	41.944	42.047	0.16	0.16	1.23	88	3.17	0.96	88	1.6	86	0.174	99	100	3.8	-0.1	611	308	356	397	376	410	961	243	78	60	78	62	78	-0.036	11.79	0.32
262	42.104	42.207	0.16	0.16	1.23	88	3.16	0.96	88	1.6	86	0.170	100	100	3.8	0	608	309	356	397	377	409	959	242	78	60	78	62	78	-0.036	11.83	0.31
263	42.265	42.368	0.16	0.16	1.24	88	3.17	0.96	88	1.6	86	0.172	100	100	3.8	0	606	309	356	397	377	409	957	241	78	60	78	62	78	-0.036	11.73	0.31
264	42.426	42.530	0.16	0.16	1.24	88	3.17	0.96	88	1.6	86	0.173	100	100	3.7	-0.1	604	309	356	397	378	409	954	240	78	60	78	62	78	-0.036	11.83	0.32
265	42.586	42.691	0.16	0.16	1.23	88	3.17	0.95	88	1.6	86	0.173	99	100	3.7	0	602	309	356	397	378	408	952	240	78	60	78	62	78	-0.036	11.66	0.31
266	42.746	42.851	0.16	0.16	1.23	88	3.16	0.96	88	1.6	86	0.173	99	99	3.7	0	600	309	356	397	379	408	950	239	78	60	78	62	78	-0.035	11.48	0.3
267	42.907	43.012	0.16	0.16	1.23	89	3.16	0.96	88	1.6	86	0.174	100	99	3.6	-0.1	597	310	356	397	380	408	947	238	78	60	78	62	78	-0.035	11.48	0.3
268	43.067	43.174	0.16	0.16	1.24	89	3.17	0.96	88	1.6	86	0.173	99	100	3.6	0	594	310	356	396	380	407	943	237	78	60	78	62	78	-0.035	11.22	0.29
269	43.229	43.335	0.16	0.16	1.23	88	3.16	0.96	88	1.6	86	0.174	100	99	3.6	0	591	310	356	397	381	407	938	236	78	60	78	62	78	-0.035	11.07	0.28
270	43.389	43.496	0.16	0.16	1.23	89	3.17	0.95	88	1.6	86	0.174	99	99	3.5	-0.1	587	310	356	396	381	406	933	235	78	60	78	62	78	-0.035	10.83	0.28
271	43.549	43.657	0.16	0.16	1.23	89	3.17	0.96	88	1.6	86	0.172	100	100	3.5	0	583	311	356	396	381	405	927	234	78	60	78	62	78	-0.035	10.64	0.28
272	43.709	43.818	0.16	0.16	1.23	89	3.17	0.96	88	1.6	86	0.173	99	100	3.5	0	578	311	356	396	382	405	920	233	78	60	78	62	78	-0.034	10.57	0.28
273	43.870	43.979	0.16	0.16	1.23	89	3.17	0.96	88	1.6	86	0.172	100	100	3.5	0	573	311	356	396	382	404	913	231	78	60	78	62	78	-0.034	10.23	0.27
274	44.032	44.141	0.16	0.16	1.23	89	3.17	0.95	88	1.6	86	0.173	101	100	3.4	-0.1	568	311	356	396	382	403	905	230	78	60	78	62	78	-0.034	10.06	0.26
275	44.192	44.302	0.16	0.16	1.23	89	3.17	0.96	88	1.6	86	0.172	100	100	3.4	0	562	312	356	395	383	402	897	229	78	60	78	62	78	-0.033	9.86	0.26
276	44.352	44.462	0.16	0.16	1.23	89	3.17	0.96	88	1.6	86	0.172	100	99	3.4	0	556	312	356	395	383	400	889	227	78	60	78	62	78	-0.033	9.86	0.26
277	44.512	44.623	0.16	0.16	1.23	89	3.17	0.96	88	1.6	86	0.173	99	100	3.4	0	551	312	356	395	383	399	881	225	78	60	78	62	78	-0.033	9.67	0.26
278	44.672	44.785	0.16	0.16	1.23	89	3.16	0.96	88	1.6	86	0.173	99	100	3.3	-0.1	545	312	356	395	384	398	873	223	78	60	78	62	78	-0.033	9.65	0.25
279	44.834	44.946	0.16	0.16	1.23	89	3.17	0.95	88	1.6	85	0.172	101	100	3.3	0	539	313	356	394	384	397	866	222	78	60	78	62	78	-0.032	9.48	0.25
280	44.994	45.107	0.16	0.16	1.23	89	3.17	0.96	88	1.6	85	0.173	99	100	3.3	0	533	313	355	394	384	396	858	220	78	60	78	62	78	-0.032	9.43	0.25
281	45.154	45.268	0.16	0.16	1.23	89	3.16	0.96	88	1.6	85	0.173	99	100	3.3	0	528	313	355	394	385	395	851	219	78	60	78	62	78	-0.032	9.27	0.25
282	45.315	45.429	0.16	0.16	1.23	89	3.17	0.96	88	1.6	85	0.171	100	100	3.3	0	522	313	355	393	385	394	844	218	78	60	78	62	78	-0.031	9.32	0.25
283	45.475	45.590	0.16	0.16	1.24	89	3.16	0.95	88	1.6	85	0.170	100	101	3.3	0	517	314	355	393	385	393	837	217	78	60	78	62	78	-0.031	9.22	0.25
284	45.637	45.751	0.16	0.16	1.23	89	3.17	0.96	89	1.6	86	0.174	100	99	3.2	-0.1	512	314	355	393	385	392	831	215	78	60	78	62	78	-0.031	9.19	0.24
285	45.797	45.912	0.16	0.16	1.24	89	3.17	0.96	89	1.6	85	0.173	99	99	3.2	0	507	314	355	392	385	391	826	214	78	60	78	62	78	-0.031	9.13	0.24
286	45.958	46.074	0.16	0.16	1.24	89	3.16	0.96	89	1.6	85	0.172	100	100	3.2	0	503	314	355	392	385	390	820	213	78	60	78	62	78	-0.030	9.14	0.24
287	46.118	46.234	0.16	0.16	1.23	89	3.16	0.96	89	1.6	85	0.175	99	98	3.2	0	498	315	355	391	385	389	815	212	78	60	78	62	78	-0.030	9.07	0.24
288	46.279	46.396	0.16	0.16	1.23	89	3.16	0.95	89	1.6	85	0.173	100	100	3.2	0	494	315	355	391	385	388	810	210	78	60	78	62	78	-0.030	9.1	0.25
289	46.439	46.558	0.16	0.16	1.23	89	3.16	0.96	89	1.6	85	0.172	100	100	3.2	0	490	315	354	390	385	387	806	210	78	60	78	62	78	-0.030	9.03	0.24
290	46.601	46.718	0.16	0.16	1.23	89	3.17	0.95	89	1.6	85	0.174	100	99	3.1	-0.1	486	315	354	390	385	386	802	208	78	60	78	62	78	-0.030	9.07	0.24
291	46.761	46.879	0.16	0.16	1.23	89	3.16	0.96	89	1.6	85	0.174	99	99	3.1	0	483	316	354	389	385	385	798	208	78	60	78	62	78	-0.030	9.06	0.25
292	46.921	47.040	0.16	0.16	1.24	89	3.18	0.96	89	1.6	85	0.174	99	99	3.1	0	479	316	354	389	385	385	794	206	78	60	78	62	78	-0.030	9.09	0.24
293	47.082	47.202	0.16	0.16	1.23	89	3.16	0.96	89	1.6	85	0.173	100	100	3.1	0	476	316	354	388	385	384	790	206	78	60	78	62	78	-0.030	9.01	0.25
294	47.242	47.363	0.16	0.16	1.24	89	3.17	0.96	89	1.6	85	0.173	99	99	3.1	0	473	317	353	388	385	383	787	205	78	60	78	62	78	-0.028	9.03	0.24
295	47.404	47.524	0.16	0.16	1.23	89	3.17	0.96	89	1.6	85	0.173	100	99	3.1	0	470	317	353	387	385	382	784	204	78	60	78	62	78	-0.029	8.99	0.24
296	47.565	47.686	0.16	0.16	1.23	89	3.16	0.96	89	1.6	85	0.172	100	100	3.0	-0.1	467	317	353	387	384	382	781	203	78	60	78	62	78	-0.029	8.96	0.24
297	47.725	47.847	0.16	0.16	1.23	89	3.17	0.96	89	1.6	85	0.172	100	100	3.0	0	464	318	353	386	384	381	778	202	78	60	78	62	78	-0.029	9	0.25
298	47.885	48.008	0.16	0.16	1.24	89	3.18	0.96	89	1.6	85	0.171	100	100	3.0	0	462	318	352	385	384	380	775	202	78	60	78	62	78	-0.029	8.91	0.24
299	48.046	48.168	0.16	0.16	1.24	89	3.16	0.95	89	1.6	85	0.172	100	99	3.0	0	459	318	352	385	384	380	773	201	78	60	78	62	78	-0.028	8.91	0.24
300	48.207	48.331	0.16	0.16	1.23	89	3.16	0.96	89	1.6	85	0.172	100	101	3.0	0	457	318	352	384	384	379	770	201	78	60	78	62	78	-0.028	8.87	0.24
301	48.368	48.491	0.16	0.16	1.23	89	3.17	0.96	89	1.6	85	0.172	100	99	3.0	0	454	319	352	383	383	378	767	200	78	60	78	62	78	-0.028	8.81	0.24
302	48.528	48.652	0.16	0.16	1.23	89	3.16	0.96	89	1.6	85	0.173	99	99	3.0	0	452	319	351	383	383	378	765	200	78	60	78	62	78	-0.028	8.86	0.24
303	48.689	48.814	0.16	0.16	1.23	89	3.16	0.96	89	1.6	85	0.172	100	100	2.9	-0.1	450	319	351	382	383	377	762	199	78	60	78	62	78	-0.028	8.73	0.24
304	48.849	48.975	0.16	0.16	1.23	89	3.16	0.96	89	1.6	85	0.171	100	100	2.9	0	448	319	351	381	383	376	760	198	78	60	78	62	78	-0.028	8.78	0.24

Wood Heater Test Data

u

Run: 7

Manufacturer: Kuma Stoves
Model: K-251
Tracking No.: 2464
Project No.: 0123WM014E
Test Date: 11-May-23
Beginning Clock Time: 12:06

Total Sampling Time: 563 min
Recording Interval: 1 min
Tunnel Diameter: 6
Background Sample Volume: 95.509 cubic feet

PM Control Modules: 335,336
Dilution Tunnel MW(dry): 29.00 lb/lb-mole
Dilution Tunnel MW(wet): 28.78 lb/lb-mole
Dilution Tunnel H2O: 2.00 percent
Dilution Tunnel Static: -0.500 "H2O
Tunnel Area: 0.19635 ft2
Pitot Tube Cp: 0.99

Avg. Tunnel Velocity: 25.28 ft/sec.
Initial Tunnel Flow: 286.0 scfm
Average Tunnel Flow: 284.4 scfm
Post-Test Leak Check (1st Hr): 0.001 cfm @ 14 in. Hg
Post-Test Leak Check (1): 0.000 cfm @ 9 in. Hg
Post-Test Leak Check (2): 0.000 cfm @ 14 in. Hg
Average Test Piece Fuel Moisture: 19.98 Dry Basis %

Technician Signature:_____

Meter Box Y Factor: 1.007 (1) 1.015 (2) 1.012 (Amb)

Export to PDF

Barometric Pressure:	Begin	Middle	End	Average
	30.13	30.05	30.05	30.08

Room Air Velocity, fpn
<50

OMNI Equipment Numbers: _____

Velocity Traverse Data

	Pt.1	Pt.2	Pt.3	Pt.4	Pt.5	Pt.6	Pt.7	Pt.8	Center	
Initial dP	0.134	0.160	0.156	0.110	0.138	0.154	0.174	0.124	0.174	"H2O
Temp:	83	83	83	83	83	83	83	83	83	°F

V_{strav} 25.35 ft/sec V_{scent} 27.95 ft/sec F_p 0.907

qwq

	Particulate Sampling Data														Fuel Weight (lb)		Temperature Data (°F)													Stack Gas Data		
Elapsed Time (min)	Gas Meter 1 (ft^3)	Gas Meter 2 (ft^3)	Sample Rate 1 (cfm)	Sample Rate 2 (cfm)	Orifice dH 1 ("H_2O)	Meter 1 Temp (°F)	Meter 1 Vacuum ("Hg)	Orifice dH 2 ("H_2O)	Meter 2 Temp (°F)	Meter 2 Vacuum ("Hg)	Dilution Tunnel (°F)	Dilution Tunnel Center dP	Pro. Rate 1	Pro. Rate 2	Scale Reading	Weight Change	Firebox Top	Firebox Bottom	Firebox Back	Firebox Left	Firebox Right	Avg. Stove Surface (Tot = ΔT)	Catalyst Exit	Stack	Filter 1	Dryer Exit 1	Filter 2	Dryer Exit 2	Ambient	Draft ("H_2O)	CO_2 (%)	CO (%)
305	49.011	49.136	0.16	0.16	1.23	89	3.17	0.96	89	1.6	85	0.170	101	100	2.9	0	446	320	351	381	382	376	758	197	78	60	78	62	78	-0.028	8.73	0.24
306	49.171	49.297	0.16	0.16	1.23	89	3.17	0.96	89	1.6	85	0.171	100	100	2.9	0	444	320	350	380	382	375	756	198	78	60	78	62	78	-0.028	8.76	0.24
307	49.332	49.459	0.16	0.16	1.23	89	3.16	0.96	89	1.6	85	0.171	100	101	2.9	0	442	320	350	379	382	375	754	197	78	60	78	62	78	-0.028	8.81	0.24
308	49.492	49.620	0.16	0.16	1.23	89	3.17	0.96	89	1.6	84	0.172	99	100	2.9	0	440	320	350	379	381	374	752	197	78	60	78	62	78	-0.028	8.91	0.25
309	49.653	49.781	0.16	0.16	1.23	89	3.17	0.96	89	1.6	84	0.171	100	100	2.9	0	439	320	350	378	381	374	751	196	78	60	78	62	78	-0.028	8.89	0.25
310	49.814	49.942	0.16	0.16	1.23	89	3.16	0.96	89	1.6	84	0.170	101	100	2.9	0	438	321	350	377	381	373	750	196	78	60	78	62	78	-0.027	8.92	0.25
311	49.975	50.104	0.16	0.16	1.24	89	3.17	0.96	89	1.6	84	0.172	100	100	2.8	-0.1	436	321	349	377	380	373	749	195	78	60	78	62	78	-0.027	8.84	0.25
312	50.136	50.265	0.16	0.16	1.23	89	3.17	0.96	89	1.6	84	0.172	100	100	2.8	0	435	321	349	376	380	372	748	195	78	60	78	62	78	-0.027	8.87	0.25
313	50.296	50.426	0.16	0.16	1.23	89	3.16	0.96	89	1.6	84	0.172	99	100	2.8	0	434	321	349	375	380	372	747	195	78	60	78	62	78	-0.027	8.8	0.25
314	50.456	50.587	0.16	0.16	1.24	89	3.17	0.96	89	1.6	84	0.173	99	99	2.8	0	432	321	349	375	379	371	745	194	78	60	78	62	78	-0.028	8.81	0.25
315	50.617	50.749	0.16	0.16	1.23	89	3.17	0.96	89	1.6	84	0.171	100	101	2.8	0	431	322	349	374	379	371	744	194	78	60	78	62	78	-0.027	8.69	0.24
316	50.778	50.909	0.16	0.16	1.24	89	3.17	0.96	89	1.6	84	0.172	100	99	2.8	0	430	322	348	373	378	370	743	193	78	60	78	62	78	-0.027	8.78	0.24
317	50.939	51.071	0.16	0.16	1.22	89	3.16	0.96	89	1.6	84	0.175	99	99	2.8	0	429	322	348	372	378	370	741	193	78	60	78	62	78	-0.027	8.73	0.24
318	51.099	51.233	0.16	0.16	1.23	89	3.16	0.96	89	1.6	84	0.169	100	101	2.7	-0.1	427	322	348	372	377	369	740	192	78	60	78	62	78	-0.027	8.71	0.25
319	51.260	51.393	0.16	0.16	1.23	89	3.16	0.95	89	1.6	84	0.171	100	99	2.7	0	426	323	348	371	377	369	739	192	78	60	78	62	78	-0.027	8.59	0.24
320	51.420	51.554	0.16	0.16	1.23	89	3.17	0.96	89	1.6	84	0.172	99	100	2.7	0	425	323	348	370	376	368	738	192	78	60	78	62	78	-0.027	8.63	0.24
321	51.582	51.716	0.16	0.16	1.24	89	3.17	0.96	89	1.6	84	0.170	101	101	2.7	0	424	323	348	370	376	368	736	191	78	60	78	62	78	-0.027	8.68	0.25
322	51.743	51.877	0.16	0.16	1.23	89	3.17	0.96	89	1.6	84	0.172	100	100	2.7	0	423	323	348	369	375	368	735	191	78	60	78	62	78	-0.027	8.64	0.24
323	51.903	52.038	0.16	0.16	1.23	89	3.15	0.96	89	1.6	84	0.170	100	100	2.7	0	422	324	348	368	375	367	733	190	78	60	78	62	78	-0.027	8.54	0.24
324	52.063	52.199	0.16	0.16	1.23	89	3.17	0.96	89	1.6	84	0.170	100	100	2.7	0	421	324	348	368	375	367	732	190	78	60	78	62	78	-0.027	8.59	0.24
325	52.224	52.362	0.16	0.16	1.23	89	3.17	0.96	89	1.6	84	0.171	100	101	2.7	0	420	324	348	367	374	367	731	190	78	60	78	62	78	-0.027	8.62	0.24
326	52.385	52.522	0.16	0.16	1.23	89	3.16	0.96	89	1.6	84	0.169	101	100	2.6	-0.1	419	324	348	366	374	366	729	190	78	60	78	62	78	-0.026	8.52	0.24
327	52.546	52.683	0.16	0.16	1.23	89	3.16	0.96	89	1.6	84	0.169	101	101	2.6	0	418	324	348	366	373	366	728	190	78	60	78	62	78	-0.027	8.59	0.24
328	52.707	52.844	0.16	0.16	1.23	89	3.17	0.96	89	1.6	84	0.171	100	100	2.6	0	417	325	348	365	373	366	727	189	78	60	78	62	78	-0.026	8.5	0.24
329	52.867	53.007	0.16	0.16	1.23	89	3.16	0.96	89	1.6	84	0.171	100	101	2.6	0	416	325	348	364	372	365	725	190	78	60	78	62	78	-0.026	8.58	0.24
330	53.028	53.167	0.16	0.16	1.23	89	3.17	0.96	89	1.6	84	0.172	100	99	2.6	0	415	325	348	364	372	365	724	189	78	60	78	62	78	-0.027	8.57	0.25
331	53.188	53.328	0.16	0.16	1.23	89	3.17	0.96	89	1.6	84	0.171	100	100	2.6	0	414	325	348	363	371	364	723	189	78	60	78	62	78	-0.026	8.67	0.24
332	53.350	53.490	0.16	0.16	1.23	89	3.16	0.95	89	1.6	84	0.169	102	101	2.6	0	413	325	348	362	371	364	723	189	78	60	78	62	78	-0.026	8.78	0.24
333	53.511	53.651	0.16	0.16	1.23	89	3.16	0.95	89	1.6	84	0.170	101	100	2.5	-0.1	413	325	348	362	370	364	722	188	78	60	78	62	78	-0.026	8.72	0.25
334	53.671	53.812	0.16	0.16	1.23	89	3.16	0.95	89	1.6	84	0.170	100	100	2.5	0	412	325	348	361	370	363	722	188	78	60	78	62	78	-0.026	8.74	0.25
335	53.831	53.974	0.16	0.16	1.23	89	3.16	0.95	89	1.6	84	0.170	100	101	2.5	0	412	326	348	360	369	363	722	188	78	60	78	62	78	-0.026	8.72	0.25
336	53.992	54.136	0.16	0.16	1.23	89	3.17	0.96	89	1.6	84	0.171	100	101	2.5	0	411	326	348	359	369	363	721	188	78	60	78	62	78	-0.026	8.75	0.24
337	54.153	54.296	0.16	0.16	1.24	89	3.16	0.95	89	1.6	84	0.171	100	99	2.5	0	411	326	348	359	369	363	721	188	78	60	78	62	78	-0.026	8.76	0.25
338	54.314	54.457	0.16	0.16	1.23	89	3.16	0.96	89	1.6	84	0.169	101	101	2.5	0	410	326	347	358	368	362	721	188	78	60	78	62	78	-0.026	8.73	0.24
339	54.475	54.618	0.16	0.16	1.23	89	3.16	0.96	89	1.6	84	0.170	101	100	2.5	0	410	326	347	357	368	362	720	187	78	60	78	62	78	-0.026	8.72	0.24
340	54.635	54.780	0.16	0.16	1.23	89	3.17	0.96	89	1.6	84	0.170	100	101	2.5	0	410	326	347	356	368	361	720	187	78	60	78	62	78	-0.026	8.72	0.24
341	54.795	54.941	0.16	0.16	1.23	89	3.17	0.96	89	1.6	84	0.171	100	100	2.4	-0.1	409	326	346	356	367	361	719	187	78	60	78	62	78	-0.026	8.67	0.24
342	54.956	55.102	0.16	0.16	1.23	89	3.16	0.96	89	1.6	84	0.170	101	100	2.4	0	409	326	346	355	367	361	718	188	78	60	78	62	78	-0.026	8.65	0.24
343	55.118	55.264	0.16	0.16	1.23	89	3.16	0.95	89	1.6	84	0.172	101	100	2.4	0	408	326	346	354	367	360	718	187	78	60	78	62	78	-0.026	8.54	0.24
344	55.278	55.425	0.16	0.16	1.23	89	3.17	0.95	89	1.6	84	0.171	100	100	2.4	0	408	326	346	353	367	360	717	188	78	60	78	62	78	-0.026	8.46	0.24
345	55.439	55.586	0.16	0.16	1.23	89	3.16	0.95	89	1.6	84	0.169	101	101	2.4	0	407	327	346	353	367	360	716	187	78	60	78	62	78	-0.026	8.48	0.23
346	55.599	55.747	0.16	0.16	1.23	89	3.16	0.96	89	1.6	84	0.170	100	100	2.4	0	407	327	346	352	367	360	715	187	78	60	78	62	78	-0.026	8.46	0.23
347	55.760	55.909	0.16	0.16	1.23	89	3.17	0.95	89	1.6	84	0.172	100	100	2.4	0	406	327	345	351	366	359	714	186	78	60	78	62	78	-0.026	8.36	0.23
348	55.921	56.070	0.16	0.16	1.23	89	3.17	0.95	89	1.6	84	0.171	100	100	2.4	0	405	327	345	350	366	359	713	186	78	60	78	62	78	-0.026	8.37	0.23

Wood Heater Test Data

u

Run: 7

Manufacturer: Kuma Stoves
Model: K-251
Tracking No.: 2464
Project No.: 0123WM014E
Test Date: 11-May-23
Beginning Clock Time: 12:06

Total Sampling Time: 563 min
Recording Interval: 1 min
Tunnel Diameter: 6
Background Sample Volume: 95.509 cubic feet

PM Control Modules: 335,336
Dilution Tunnel MW(dry): 29.00 lb/lb-mole
Dilution Tunnel MW(wet): 28.78 lb/lb-mole
Dilution Tunnel H2O: 2.00 percent
Dilution Tunnel Static: -0.500 "H2O
Tunnel Area: 0.19635 ft2
Pitot Tube Cp: 0.99

Avg. Tunnel Velocity: 25.28 ft/sec.
Initial Tunnel Flow: 286.0 scfm
Average Tunnel Flow: 284.4 scfm
Post-Test Leak Check (1st Hr): 0.001 cfm @ 14 in. Hg
Post-Test Leak Check (1): 0.000 cfm @ 9 in. Hg
Post-Test Leak Check (2): 0.000 cfm @ 14 in. Hg
Average Test Piece Fuel Moisture: 19.98 Dry Basis %

Technician Signature:_____

Meter Box Y Factor: 1.007 (1) 1.015 (2) 1.012 (Amb)

Export to PDF

Barometric Pressure:	Begin	Middle	End	Average
	30.13	30.05	30.05	30.08

Room Air Velocity, fpn
<50

OMNI Equipment Numbers: _____

Velocity Traverse Data

	Pt.1	Pt.2	Pt.3	Pt.4	Pt.5	Pt.6	Pt.7	Pt.8	Center	
Initial dP	0.134	0.160	0.156	0.110	0.138	0.154	0.174	0.124	0.174	"H2O
Temp:	83	83	83	83	83	83	83	83	83	°F

V_{strav} 25.35 ft/sec V_{scent} 27.95 ft/sec F_p 0.907

qwq

	Particulate Sampling Data														Fuel Weight (lb)		Temperature Data (°F)													Stack Gas Data		
Elapsed Time (min)	Gas Meter 1 (ft^3)	Gas Meter 2 (ft^3)	Sample Rate 1 (cfm)	Sample Rate 2 (cfm)	Orifice dH 1 ("H_2O)	Meter 1 Temp (°F)	Meter 1 Vacuum ("Hg)	Orifice dH 2 ("H_2O)	Meter 2 Temp (°F)	Meter 2 Vacuum ("Hg)	Dilution Tunnel (°F)	Dilution Tunnel Center dP	Pro. Rate 1	Pro. Rate 2	Scale Reading	Weight Change	Firebox Top	Firebox Bottom	Firebox Back	Firebox Left	Firebox Right	Avg. Stove Surface (Tot = ΔT)	Catalyst Exit	Stack	Filter 1	Dryer Exit 1	Filter 2	Dryer Exit 2	Ambient	Draft ("H_2O)	CO_2 (%)	CO (%)
349	56.082	56.231	0.16	0.16	1.23	89	3.18	0.96	89	1.6	84	0.170	101	100	2.4	0	404	327	344	350	366	358	712	186	78	60	78	62	78	-0.026	8.35	0.23
350	56.243	56.392	0.16	0.16	1.23	89	3.16	0.96	89	1.6	84	0.171	100	100	2.3	-0.1	404	327	344	349	366	358	710	186	78	60	78	62	78	-0.026	8.35	0.23
351	56.403	56.554	0.16	0.16	1.23	89	3.17	0.95	89	1.6	84	0.171	100	101	2.3	0	403	327	344	349	366	358	709	186	78	60	78	62	78	-0.026	8.3	0.23
352	56.564	56.715	0.16	0.16	1.24	89	3.16	0.96	89	1.6	84	0.170	101	100	2.3	0	402	327	343	348	366	357	708	185	78	60	78	62	78	-0.026	8.27	0.23
353	56.725	56.876	0.16	0.16	1.23	89	3.17	0.95	89	1.6	84	0.172	100	100	2.3	0	401	327	343	347	366	357	707	185	78	60	78	62	78	-0.025	8.24	0.23
354	56.886	57.038	0.16	0.16	1.23	89	3.17	0.96	89	1.6	84	0.169	101	101	2.3	0	401	327	342	347	366	357	706	185	78	60	78	62	78	-0.025	8.35	0.23
355	57.047	57.200	0.16	0.16	1.23	89	3.16	0.96	89	1.6	84	0.170	101	101	2.3	0	400	327	342	346	365	356	704	185	78	60	78	62	78	-0.025	8.24	0.23
356	57.207	57.360	0.16	0.16	1.23	89	3.17	0.95	89	1.6	84	0.170	100	100	2.3	0	399	327	342	345	365	356	703	185	78	60	78	62	78	-0.025	8.3	0.23
357	57.367	57.522	0.16	0.16	1.23	89	3.17	0.95	89	1.6	84	0.170	100	101	2.3	0	398	327	342	344	365	355	702	185	78	60	78	62	78	-0.026	8.26	0.23
358	57.528	57.684	0.16	0.16	1.23	89	3.16	0.95	89	1.6	84	0.172	100	100	2.3	0	398	327	341	344	365	355	701	185	78	60	78	62	78	-0.025	8.28	0.23
359	57.690	57.844	0.16	0.16	1.23	89	3.17	0.95	89	1.6	84	0.170	101	100	2.2	-0.1	397	327	341	343	365	355	700	185	78	60	78	62	78	-0.025	7.95	0.22
360	57.850	58.005	0.16	0.16	1.23	89	3.16	0.96	89	1.6	84	0.171	100	100	2.2	0	396	327	341	343	365	354	699	185	78	60	78	62	78	-0.025	7.93	0.22
361	58.011	58.167	0.16	0.16	1.23	90	3.16	0.96	89	1.6	84	0.171	100	101	2.2	0	395	327	340	342	365	354	698	184	79	60	78	62	78	-0.025	7.93	0.22
362	58.171	58.329	0.16	0.16	1.23	90	3.17	0.96	89	1.6	84	0.170	100	101	2.2	0	394	327	340	341	365	353	696	184	79	60	78	62	78	-0.025	7.91	0.22
363	58.332	58.489	0.16	0.16	1.24	90	3.16	0.96	89	1.6	84	0.170	100	100	2.2	0	393	327	340	341	364	353	694	183	79	60	78	62	78	-0.025	7.83	0.22
364	58.493	58.651	0.16	0.16	1.24	90	3.17	0.96	89	1.6	84	0.170	100	101	2.2	0	392	327	339	340	364	352	692	183	79	60	78	62	78	-0.025	7.76	0.22
365	58.655	58.812	0.16	0.16	1.23	90	3.16	0.96	89	1.6	84	0.170	101	100	2.2	0	391	327	339	340	364	352	690	183	79	60	78	62	78	-0.025	7.71	0.22
366	58.815	58.974	0.16	0.16	1.23	90	3.17	0.96	89	1.6	84	0.168	100	101	2.2	0	390	327	339	339	364	352	688	183	79	60	78	62	78	-0.025	7.61	0.22
367	58.976	59.135	0.16	0.16	1.23	90	3.17	0.96	89	1.6	84	0.170	100	100	2.2	0	389	327	338	338	364	351	686	182	79	60	78	62	78	-0.025	7.56	0.22
368	59.136	59.296	0.16	0.16	1.23	90	3.15	0.95	89	1.6	84	0.169	100	101	2.1	-0.1	388	327	338	338	363	351	685	182	79	60	78	62	78	-0.025	7.48	0.21
369	59.297	59.458	0.16	0.16	1.24	90	3.16	0.96	89	1.6	84	0.169	101	101	2.1	0	387	327	337	337	363	350	683	181	79	60	78	62	78	-0.025	7.48	0.22
370	59.459	59.619	0.16	0.16	1.23	90	3.17	0.96	89	1.6	83	0.168	102	101	2.1	0	385	327	337	336	363	350	681	181	78	60	78	62	78	-0.025	7.39	0.21
371	59.619	59.780	0.16	0.16	1.23	90	3.16	0.96	89	1.6	83	0.168	100	101	2.1	0	384	327	336	336	363	349	679	181	78	60	78	62	78	-0.025	7.43	0.22
372	59.779	59.941	0.16	0.16	1.23	90	3.16	0.96	89	1.6	84	0.171	100	100	2.1	0	383	327	336	335	362	349	677	180	78	60	78	62	78	-0.025	7.4	0.22
373	59.940	60.103	0.16	0.16	1.23	90	3.16	0.96	89	1.6	84	0.171	100	101	2.1	0	382	327	336	335	362	348	676	180	79	60	78	62	78	-0.025	7.41	0.21
374	60.101	60.264	0.16	0.16	1.23	90	3.16	0.96	89	1.6	84	0.170	100	100	2.1	0	381	327	335	334	362	348	674	180	79	60	78	62	78	-0.024	7.45	0.22
375	60.262	60.425	0.16	0.16	1.23	90	3.16	0.96	89	1.6	84	0.169	101	101	2.1	0	380	327	335	334	362	348	673	180	79	60	78	62	78	-0.025	7.22	0.21
376	60.423	60.587	0.16	0.16	1.23	90	3.16	0.96	89	1.6	84	0.171	100	101	2.1	0	379	327	335	333	361	347	671	180	79	60	78	62	78	-0.025	7.65	0.22
377	60.584	60.749	0.16	0.16	1.23	90	3.16	0.95	89	1.6	84	0.167	101	102	2.1	0	379	327	334	332	361	347	670	180	79	60	78	62	78	-0.025	7.8	0.23
378	60.744	60.910	0.16	0.16	1.23	90	3.16	0.96	89	1.6	84	0.169	100	101	2.1	0	378	326	334	331	361	346	669	180	79	60	78	62	78	-0.025	7.93	0.23
379	60.904	61.071	0.16	0.16	1.23	90	3.17	0.96	89	1.6	84	0.169	100	101	2.0	-0.1	378	326	333	331	360	346	670	179	79	60	78	62	78	-0.024	7.85	0.23
380	61.065	61.233	0.16	0.16	1.23	90	3.16	0.96	89	1.6	84	0.170	100	101	2.0	0	378	326	333	330	360	345	670	179	79	60	78	62	78	-0.024	7.9	0.23
381	61.227	61.394	0.16	0.16	1.23	90	3.16	0.95	89	1.6	84	0.170	101	100	2.0	0	377	326	332	329	359	345	670	179	79	60	78	62	78	-0.024	7.94	0.23
382	61.387	61.554	0.16	0.16	1.22	90	3.17	0.96	89	1.6	84	0.169	100	100	2.0	0	377	326	332	329	359	345	670	179	79	60	78	62	78	-0.024	7.97	0.23
383	61.548	61.716	0.16	0.16	1.23	90	3.16	0.96	89	1.6	84	0.171	100	101	2.0	0	377	326	332	328	358	344	670	179	79	60	78	62	78	-0.024	8.01	0.23
384	61.708	61.878	0.16	0.16	1.23	90	3.15	0.96	89	1.6	84	0.171	100	101	2.0	0	376	326	331	327	357	343	670	179	79	60	78	62	78	-0.025	7.97	0.23
385	61.869	62.039	0.16	0.16	1.24	90	3.17	0.95	89	1.6	84	0.170	100	100	2.0	0	376	326	331	327	357	343	670	178	79	60	78	62	78	-0.024	8.05	0.23
386	62.031	62.200	0.16	0.16	1.23	90	3.17	0.96	89	1.6	84	0.170	101	100	2.0	0	376	326	330	326	356	343	670	178	79	60	78	62	78	-0.024	8.07	0.23
387	62.191	62.362	0.16	0.16	1.23	90	3.17	0.95	90	1.6	84	0.170	100	101	2.0	0	376	326	330	326	355	343	670	178	79	61	78	62	78	-0.024	8.02	0.23
388	62.352	62.523	0.16	0.16	1.23	90	3.16	0.95	90	1.6	84	0.169	101	100	1.9	-0.1	375	326	330	325	355	342	670	178	79	61	78	62	78	-0.024	8.05	0.23
389	62.512	62.684	0.16	0.16	1.23	90	3.16	0.95	90	1.6	84	0.169	100	100	1.9	0	375	326	329	324	354	342	670	178	79	61	78	62	78	-0.024	8.07	0.23
390	62.673	62.845	0.16	0.16	1.23	90	3.17	0.96	90	1.6	84	0.169	101	100	1.9	0	375	326	329	324	354	342	670	178	79	61	78	62	78	-0.024	8.09	0.23
391	62.834	63.008	0.16	0.16	1.23	90	3.15	0.95	90	1.6	84	0.172	100	101	1.9	0	375	326	328	323	353	341	671	177	79	60	78	62	78	-0.024	8.07	0.23
392	62.995	63.169	0.16	0.16	1.23	90	3.17	0.95	90	1.6	84	0.170	100	100	1.9	0	375	326	328	323	353	341	670	178	79	61	78	62	78	-0.024	8.1	0.23

Wood Heater Test Data

u

Run: 7

Manufacturer: Kuma Stoves
Model: K-251
Tracking No.: 2464
Project No.: 0123WM014E
Test Date: 11-May-23
Beginning Clock Time: 12:06

Total Sampling Time: 563 min
Recording Interval: 1 min
Tunnel Diameter: 6
Background Sample Volume: 95.509 cubic feet

PM Control Modules: 335,336
Dilution Tunnel MW(dry): 29.00 lb/lb-mole
Dilution Tunnel MW(wet): 28.78 lb/lb-mole
Dilution Tunnel H2O: 2.00 percent
Dilution Tunnel Static: -0.500 "H2O
Tunnel Area: 0.19635 ft2
Pitot Tube Cp: 0.99

Avg. Tunnel Velocity: 25.28 ft/sec.
Initial Tunnel Flow: 286.0 scfm
Average Tunnel Flow: 284.4 scfm
Post-Test Leak Check (1st Hr): 0.001 cfm @ 14 in. Hg
Post-Test Leak Check (1): 0.000 cfm @ 9 in. Hg
Post-Test Leak Check (2): 0.000 cfm @ 14 in. Hg
Average Test Piece Fuel Moisture: 19.98 Dry Basis %

Technician Signature:_____

Export to PDF

Meter Box Y Factor: 1.007 (1) 1.015 (2) 1.012 (Amb)

Barometric Pressure:	Begin	Middle	End	Average
	30.13	30.05	30.05	30.08

Room Air Velocity, fpn
<50

OMNI Equipment Numbers: _____

Velocity Traverse Data

	Pt.1	Pt.2	Pt.3	Pt.4	Pt.5	Pt.6	Pt.7	Pt.8	Center	
Initial dP	0.134	0.160	0.156	0.110	0.138	0.154	0.174	0.124	0.174	"H2O
Temp:	83	83	83	83	83	83	83	83	83	°F

V_{strav} 25.35 ft/sec V_{scent} 27.95 ft/sec F_p 0.907

qwq

	Particulate Sampling Data														Fuel Weight (lb)		Temperature Data (°F)													Stack Gas Data		
Elapsed Time (min)	Gas Meter 1 (ft^3)	Gas Meter 2 (ft^3)	Sample Rate 1 (cfm)	Sample Rate 2 (cfm)	Orifice dH 1 ("H_2O)	Meter 1 Temp (°F)	Meter 1 Vacuum ("Hg)	Orifice dH 2 ("H_2O)	Meter 2 Temp (°F)	Meter 2 Vacuum ("Hg)	Dilution Tunnel (°F)	Dilution Tunnel Center dP	Pro. Rate 1	Pro. Rate 2	Scale Reading	Weight Change	Firebox Top	Firebox Bottom	Firebox Back	Firebox Left	Firebox Right	Avg. Stove Surface (Tot = ΔT)	Catalyst Exit	Stack	Filter 1	Dryer Exit 1	Filter 2	Dryer Exit 2	Ambient	Draft ("H_2O)	CO_2 (%)	CO (%)
393	63.156	63.329	0.16	0.16	1.23	90	3.16	0.96	90	1.6	84	0.169	101	100	1.9	0	375	326	328	322	352	341	670	178	79	61	78	62	78	-0.024	8.07	0.23
394	63.316	63.491	0.16	0.16	1.23	90	3.17	0.96	90	1.6	84	0.169	100	101	1.9	0	375	326	328	322	352	341	670	178	79	61	78	62	78	-0.024	8.15	0.23
395	63.477	63.653	0.16	0.16	1.23	90	3.16	0.96	90	1.6	84	0.170	100	101	1.9	0	375	326	328	321	351	340	670	178	79	61	78	62	78	-0.024	8.17	0.23
396	63.638	63.814	0.16	0.16	1.23	90	3.17	0.96	90	1.6	84	0.171	100	100	1.8	-0.1	375	326	327	321	351	340	670	178	79	61	78	62	78	-0.024	8.26	0.23
397	63.799	63.975	0.16	0.16	1.23	90	3.17	0.96	90	1.6	84	0.169	101	100	1.8	0	375	326	327	320	351	340	670	178	79	61	78	62	78	-0.024	8.2	0.23
398	63.960	64.137	0.16	0.16	1.22	90	3.16	0.96	90	1.6	84	0.168	101	101	1.8	0	375	326	327	320	350	340	671	178	79	61	78	62	78	-0.024	8.19	0.23
399	64.120	64.298	0.16	0.16	1.23	90	3.16	0.96	90	1.6	84	0.169	100	100	1.8	0	375	325	326	319	350	339	671	179	79	61	78	62	78	-0.024	8.3	0.23
400	64.281	64.459	0.16	0.16	1.23	90	3.17	0.96	90	1.6	84	0.170	100	100	1.8	0	375	325	326	319	349	339	671	178	79	61	78	62	78	-0.024	8.33	0.23
401	64.442	64.621	0.16	0.16	1.23	90	3.17	0.96	90	1.6	84	0.169	101	101	1.8	0	375	325	325	318	349	338	671	179	79	61	78	62	78	-0.024	8.28	0.23
402	64.603	64.783	0.16	0.16	1.24	90	3.16	0.96	90	1.6	84	0.170	100	101	1.8	0	375	325	325	318	349	338	671	178	79	61	78	62	78	-0.024	8.32	0.23
403	64.764	64.944	0.16	0.16	1.23	90	3.17	0.96	90	1.6	84	0.170	100	100	1.8	0	375	325	325	317	349	338	672	178	79	61	78	62	78	-0.024	8.34	0.23
404	64.925	65.105	0.16	0.16	1.23	90	3.17	0.96	90	1.6	83	0.168	101	101	1.8	0	375	325	324	317	348	338	672	178	79	61	78	62	78	-0.024	8.34	0.23
405	65.085	65.266	0.16	0.16	1.23	90	3.17	0.95	90	1.6	84	0.169	100	100	1.7	-0.1	375	325	324	317	348	338	672	178	79	61	78	62	78	-0.024	8.36	0.23
406	65.246	65.428	0.16	0.16	1.23	90	3.17	0.96	90	1.6	84	0.168	101	101	1.7	0	375	325	324	316	348	338	672	178	79	61	78	62	78	-0.024	8.37	0.23
407	65.407	65.589	0.16	0.16	1.23	90	3.16	0.96	90	1.6	84	0.169	101	100	1.7	0	375	325	324	316	348	338	672	178	79	61	78	62	78	-0.024	8.46	0.24
408	65.569	65.750	0.16	0.16	1.23	90	3.15	0.96	90	1.6	84	0.168	102	101	1.7	0	375	325	323	315	348	337	672	179	79	61	78	62	78	-0.024	8.39	0.24
409	65.729	65.912	0.16	0.16	1.23	90	3.16	0.96	90	1.6	84	0.170	100	101	1.7	0	375	325	323	315	347	337	672	178	79	61	78	62	78	-0.024	8.43	0.24
410	65.889	66.074	0.16	0.16	1.23	90	3.16	0.96	90	1.6	84	0.168	100	101	1.7	0	375	325	323	315	347	337	672	178	79	61	78	62	78	-0.024	8.36	0.24
411	66.050	66.235	0.16	0.16	1.23	90	3.17	0.96	90	1.6	84	0.170	100	100	1.7	0	375	325	322	314	347	337	672	178	79	61	78	62	78	-0.024	8.34	0.23
412	66.211	66.396	0.16	0.16	1.23	90	3.16	0.96	90	1.6	84	0.170	100	100	1.7	0	375	325	322	314	347	337	672	178	79	61	78	62	78	-0.024	8.3	0.23
413	66.372	66.558	0.16	0.16	1.23	90	3.16	0.95	90	1.6	84	0.170	100	101	1.7	0	375	324	322	313	347	336	672	179	79	61	78	62	78	-0.024	8.3	0.23
414	66.533	66.720	0.16	0.16	1.23	90	3.16	0.95	90	1.6	84	0.170	100	101	1.6	-0.1	375	324	321	313	347	336	672	178	79	61	78	62	78	-0.024	8.28	0.23
415	66.694	66.880	0.16	0.16	1.23	90	3.16	0.95	90	1.6	84	0.170	100	99	1.6	0	375	324	321	313	347	336	672	178	79	61	78	62	78	-0.024	8.2	0.23
416	66.855	67.042	0.16	0.16	1.23	90	3.17	0.96	90	1.6	84	0.170	100	101	1.6	0	375	324	321	312	347	336	671	178	79	61	78	62	78	-0.024	8.24	0.23
417	67.015	67.204	0.16	0.16	1.23	90	3.17	0.95	90	1.6	84	0.170	100	101	1.6	0	375	324	321	312	347	336	671	178	79	61	78	62	78	-0.024	8.17	0.23
418	67.176	67.365	0.16	0.16	1.23	90	3.17	0.95	90	1.6	84	0.168	101	101	1.6	0	375	324	320	312	347	336	671	178	79	61	78	62	78	-0.024	8.22	0.23
419	67.338	67.526	0.16	0.16	1.23	90	3.16	0.95	90	1.6	84	0.170	101	100	1.6	0	374	324	320	311	347	335	671	178	79	61	78	62	78	-0.024	8.13	0.23
420	67.499	67.688	0.16	0.16	1.23	90	3.16	0.96	90	1.6	84	0.168	101	101	1.6	0	374	324	320	311	347	335	670	178	79	61	78	62	78	-0.024	8.16	0.23
421	67.659	67.850	0.16	0.16	1.23	90	3.15	0.96	90	1.6	84	0.167	101	102	1.6	0	374	324	320	311	347	335	670	178	79	61	78	62	78	-0.024	8.22	0.23
422	67.819	68.011	0.16	0.16	1.23	90	3.17	0.96	90	1.6	84	0.167	101	101	1.5	-0.1	374	324	319	310	347	335	670	178	79	61	79	62	78	-0.024	8.1	0.22
423	67.980	68.172	0.16	0.16	1.23	90	3.16	0.96	90	1.6	84	0.170	100	100	1.5	0	374	324	319	310	347	335	669	178	79	61	79	62	78	-0.024	7.99	0.22
424	68.141	68.334	0.16	0.16	1.24	90	3.16	0.96	90	1.6	84	0.170	100	101	1.5	0	373	324	319	309	347	334	669	178	79	61	78	62	78	-0.024	8.03	0.22
425	68.303	68.496	0.16	0.16	1.23	90	3.15	0.96	90	1.6	84	0.168	102	101	1.5	0	373	324	319	309	347	334	668	178	79	61	79	62	78	-0.024	7.91	0.22
426	68.463	68.656	0.16	0.16	1.23	90	3.15	0.96	90	1.6	84	0.169	100	100	1.5	0	373	324	319	309	347	334	667	178	79	61	79	62	78	-0.024	7.87	0.22
427	68.624	68.818	0.16	0.16	1.23	90	3.16	0.96	90	1.6	84	0.168	101	101	1.5	0	372	324	319	309	347	334	666	178	79	61	78	62	78	-0.024	7.84	0.22
428	68.784	68.980	0.16	0.16	1.23	90	3.17	0.96	90	1.6	84	0.169	100	101	1.5	0	372	324	318	308	347	334	666	177	79	61	79	62	78	-0.024	7.82	0.22
429	68.945	69.141	0.16	0.16	1.23	90	3.17	0.95	90	1.6	84	0.169	101	100	1.5	0	371	324	318	308	347	334	664	177	79	61	79	62	78	-0.024	7.78	0.22
430	69.107	69.302	0.16	0.16	1.23	90	3.16	0.96	90	1.6	84	0.169	101	100	1.5	0	371	324	318	308	347	334	663	177	79	61	79	62	78	-0.025	7.71	0.22
431	69.268	69.464	0.16	0.16	1.23	90	3.16	0.96	90	1.6	84	0.168	101	101	1.5	0	370	323	318	307	347	333	662	177	79	61	79	62	78	-0.025	7.72	0.22
432	69.428	69.626	0.16	0.16	1.23	90	3.15	0.96	90	1.6	84	0.166	101	102	1.4	-0.1	370	323	318	307	347	333	661	177	79	61	79	62	78	-0.024	7.66	0.22
433	69.589	69.787	0.16	0.16	1.23	90	3.15	0.95	90	1.6	84	0.171	100	100	1.4	0	369	323	318	307	346	333	660	177	79	61	79	62	78	-0.024	7.61	0.22
434	69.750	69.948	0.16	0.16	1.23	90	3.15	0.96	90	1.6	84	0.169	101	100	1.4	0	368	323	317	306	346	332	659	177	79	61	79	62	78	-0.024	7.67	0.21
435	69.911	70.110	0.16	0.16	1.24	90	3.16	0.96	90	1.6	84	0.169	101	101	1.4	0	368	323	317	306	346	332	658	177	79	61	79	62	78	-0.024	7.9	0.22
436	70.073	70.272	0.16	0.16	1.23	90	3.15	0.96	90	1.6	84	0.168	102	101	1.4	0	368	323	317	305	346	332	657	177	79	61	79	63	78	-0.024	7.94	0.22

Wood Heater Test Data

u

Run: 7

Manufacturer: Kuma Stoves
Model: K-251
Tracking No.: 2464
Project No.: 0123WM014E
Test Date: 11-May-23
Beginning Clock Time: 12:06

Total Sampling Time: 563 min
Recording Interval: 1 min
Tunnel Diameter: 6
Background Sample Volume: 95.509 cubic feet

PM Control Modules: 335,336
Dilution Tunnel MW(dry): 29.00 lb/lb-mole
Dilution Tunnel MW(wet): 28.78 lb/lb-mole
Dilution Tunnel H2O: 2.00 percent
Dilution Tunnel Static: -0.500 "H2O
Tunnel Area: 0.19635 ft2
Pitot Tube Cp: 0.99

Avg. Tunnel Velocity: 25.28 ft/sec.
Initial Tunnel Flow: 286.0 scfm
Average Tunnel Flow: 284.4 scfm
Post-Test Leak Check (1st Hr): 0.001 cfm @ 14 in. Hg
Post-Test Leak Check (1): 0.000 cfm @ 9 in. Hg
Post-Test Leak Check (2): 0.000 cfm @ 14 in. Hg
Average Test Piece Fuel Moisture: 19.98 Dry Basis %

Technician Signature:_____

Meter Box Y Factor: 1.007 (1) 1.015 (2) 1.012 (Amb)

Barometric Pressure:

Begin	Middle	End	Average
30.13	30.05	30.05	30.08

Room Air Velocity, fpn
<50

OMNI Equipment Numbers: _____

Velocity Traverse Data

	Pt.1	Pt.2	Pt.3	Pt.4	Pt.5	Pt.6	Pt.7	Pt.8	Center	
Initial dP	0.134	0.160	0.156	0.110	0.138	0.154	0.174	0.124	0.174	"H2O
Temp:	83	83	83	83	83	83	83	83	83	°F

V_{strav} 25.35 ft/sec V_{scent} 27.95 ft/sec F_p 0.907

qwq

	Particulate Sampling Data														Fuel Weight (lb)		Temperature Data (°F)													Stack Gas Data		
Elapsed Time (min)	Gas Meter 1 (ft^3)	Gas Meter 2 (ft^3)	Sample Rate 1 (cfm)	Sample Rate 2 (cfm)	Orifice dH 1 ("H_2O)	Meter 1 Temp (°F)	Meter 1 Vacuum ("Hg)	Orifice dH 2 ("H_2O)	Meter 2 Temp (°F)	Meter 2 Vacuum ("Hg)	Dilution Tunnel (°F)	Dilution Tunnel Center dP	Pro. Rate 1	Pro. Rate 2	Scale Reading	Weight Change	Firebox Top	Firebox Bottom	Firebox Back	Firebox Left	Firebox Right	Avg. Stove Surface (Tot = ΔT)	Catalyst Exit	Stack	Filter 1	Dryer Exit 1	Filter 2	Dryer Exit 2	Ambient	Draft ("H_2O)	CO_2 (%)	CO (%)
437	70.234	70.433	0.16	0.16	1.22	90	3.16	0.95	90	1.6	84	0.170	100	100	1.4	0	367	323	316	305	346	331	657	177	79	61	79	63	78	-0.024	7.95	0.22
438	70.394	70.594	0.16	0.16	1.23	90	3.17	0.96	90	1.6	84	0.168	100	101	1.4	0	367	323	316	305	346	331	657	177	79	61	79	63	78	-0.024	7.93	0.22
439	70.554	70.756	0.16	0.16	1.23	90	3.17	0.96	90	1.6	84	0.171	100	100	1.4	0	367	323	316	305	346	331	657	176	79	61	79	63	78	-0.024	7.99	0.22
440	70.715	70.918	0.16	0.16	1.23	90	3.17	0.96	90	1.6	84	0.168	101	101	1.3	-0.1	366	323	316	304	346	331	657	176	79	61	79	63	78	-0.024	7.95	0.22
441	70.877	71.079	0.16	0.16	1.23	90	3.17	0.96	90	1.6	84	0.172	100	100	1.3	0	366	323	315	304	345	331	657	176	79	61	79	63	78	-0.024	8.03	0.22
442	71.038	71.240	0.16	0.16	1.23	90	3.17	0.96	90	1.6	84	0.167	101	101	1.3	0	366	323	315	304	345	331	657	176	79	61	79	63	78	-0.024	8.07	0.22
443	71.199	71.402	0.16	0.16	1.23	90	3.17	0.96	90	1.6	84	0.170	100	101	1.3	0	366	323	315	303	344	330	657	177	79	61	79	63	78	-0.024	8.08	0.22
444	71.359	71.564	0.16	0.16	1.23	90	3.17	0.96	90	1.6	84	0.170	100	101	1.3	0	366	323	314	303	344	330	657	176	79	61	79	63	78	-0.024	8.16	0.22
445	71.520	71.725	0.16	0.16	1.24	90	3.16	0.96	90	1.6	84	0.170	100	100	1.3	0	366	323	314	303	344	330	657	176	79	61	79	63	78	-0.024	8.16	0.22
446	71.681	71.886	0.16	0.16	1.23	90	3.17	0.96	90	1.6	83	0.168	101	101	1.3	0	365	323	313	303	343	329	657	176	79	61	79	63	78	-0.024	8.22	0.21
447	71.843	72.049	0.16	0.16	1.23	90	3.17	0.95	90	1.6	83	0.169	101	102	1.3	0	365	323	313	303	343	329	656	176	79	61	79	63	78	-0.024	8.28	0.2
448	72.003	72.210	0.16	0.16	1.23	90	3.16	0.96	90	1.6	84	0.168	100	101	1.2	-0.1	364	323	313	303	343	329	655	176	79	62	79	63	78	-0.024	8.63	0.19
449	72.164	72.371	0.16	0.16	1.23	90	3.15	0.96	90	1.6	84	0.169	101	100	1.2	0	363	323	313	303	342	329	653	175	79	62	79	63	78	-0.023	8.78	0.19
450	72.324	72.532	0.16	0.16	1.23	90	3.17	0.96	90	1.6	84	0.169	100	100	1.2	0	362	323	313	303	342	329	652	175	79	62	79	63	78	-0.024	8.88	0.18
451	72.485	72.695	0.16	0.16	1.23	90	3.15	0.96	90	1.6	84	0.168	101	102	1.2	0	362	323	312	303	341	328	651	175	79	62	79	63	78	-0.024	9.02	0.18
452	72.647	72.856	0.16	0.16	1.23	90	3.17	0.95	90	1.6	84	0.170	101	100	1.2	0	361	323	312	303	341	328	651	175	79	62	79	63	78	-0.024	9.07	0.18
453	72.808	73.017	0.16	0.16	1.23	90	3.16	0.96	90	1.6	84	0.169	101	100	1.2	0	361	323	312	303	341	328	651	175	79	62	79	63	78	-0.024	9.06	0.19
454	72.969	73.178	0.16	0.16	1.23	90	3.16	0.96	90	1.6	84	0.169	101	100	1.2	0	361	323	311	303	340	328	652	175	79	62	79	63	78	-0.024	8.95	0.19
455	73.129	73.341	0.16	0.16	1.23	90	3.17	0.96	90	1.6	84	0.169	100	102	1.1	-0.1	361	323	311	303	340	328	653	175	79	62	79	63	78	-0.024	9.09	0.19
456	73.290	73.501	0.16	0.16	1.23	90	3.17	0.96	90	1.6	84	0.169	101	100	1.1	0	361	323	310	303	339	327	654	174	79	62	79	63	78	-0.024	9.01	0.19
457	73.451	73.663	0.16	0.16	1.23	90	3.17	0.96	90	1.6	84	0.167	101	102	1.1	0	361	323	310	303	339	327	655	175	79	62	79	63	78	-0.024	9.02	0.19
458	73.612	73.825	0.16	0.16	1.24	90	3.17	0.96	90	1.6	84	0.169	101	101	1.1	0	361	323	309	303	339	327	656	175	79	62	79	63	78	-0.023	8.97	0.19
459	73.773	73.987	0.16	0.16	1.23	90	3.15	0.96	90	1.6	84	0.168	101	101	1.1	0	361	323	309	303	338	327	657	175	79	62	79	63	78	-0.023	8.79	0.19
460	73.934	74.147	0.16	0.16	1.23	90	3.17	0.96	90	1.6	84	0.168	101	100	1.1	0	361	323	309	303	338	327	658	175	79	62	79	63	78	-0.024	8.87	0.19
461	74.094	74.309	0.16	0.16	1.23	90	3.16	0.96	90	1.6	84	0.169	100	101	1.1	0	362	323	308	304	338	327	658	175	79	62	79	63	78	-0.024	8.76	0.2
462	74.255	74.471	0.16	0.16	1.23	90	3.16	0.96	90	1.6	84	0.170	100	101	1.0	-0.1	362	323	308	304	337	327	658	175	79	62	79	63	78	-0.024	8.58	0.19
463	74.416	74.633	0.16	0.16	1.24	90	3.16	0.96	90	1.6	84	0.169	101	101	1.0	0	362	323	307	304	337	327	659	175	79	62	79	63	78	-0.024	8.49	0.2
464	74.578	74.794	0.16	0.16	1.23	90	3.16	0.96	90	1.6	84	0.168	102	101	1.0	0	362	323	307	304	337	327	659	175	79	62	79	64	78	-0.024	8.32	0.2
465	74.739	74.955	0.16	0.16	1.23	90	3.16	0.96	90	1.6	84	0.169	101	100	1.0	0	362	323	307	304	336	326	660	175	79	62	79	64	78	-0.024	8.33	0.2
466	74.899	75.118	0.16	0.16	1.23	90	3.16	0.96	90	1.6	83	0.167	101	102	1.0	0	362	323	306	304	336	326	660	175	79	62	79	64	78	-0.023	8.18	0.2
467	75.060	75.279	0.16	0.16	1.23	90	3.15	0.95	90	1.6	84	0.169	101	100	1.0	0	362	323	306	305	336	326	659	174	79	62	79	64	78	-0.024	8.13	0.19
468	75.221	75.440	0.16	0.16	1.23	90	3.16	0.96	90	1.6	83	0.168	101	101	1.0	0	362	323	305	305	336	326	659	174	79	62	79	64	78	-0.023	7.96	0.2
469	75.382	75.601	0.16	0.16	1.23	90	3.17	0.96	90	1.6	84	0.170	100	100	1.0	0	362	323	305	305	335	326	658	174	79	62	79	64	78	-0.024	7.97	0.19
470	75.543	75.764	0.16	0.16	1.23	90	3.16	0.96	90	1.6	84	0.170	100	101	0.9	-0.1	362	323	304	305	335	326	657	174	79	62	79	64	78	-0.024	7.91	0.19
471	75.704	75.925	0.16	0.16	1.23	90	3.15	0.96	90	1.6	83	0.170	100	100	0.9	0	362	323	304	305	335	326	657	174	79	62	79	64	78	-0.024	7.9	0.2
472	75.865	76.086	0.16	0.16	1.23	90	3.16	0.96	90	1.6	83	0.171	100	100	0.9	0	361	323	304	305	334	325	656	174	79	62	79	64	78	-0.024	7.87	0.2
473	76.025	76.248	0.16	0.16	1.24	90	3.17	0.96	90	1.6	84	0.168	100	101	0.9	0	361	323	303	305	334	325	655	174	79	62	79	64	78	-0.024	7.8	0.2
474	76.186	76.410	0.16	0.16	1.23	90	3.16	0.96	90	1.6	83	0.170	100	101	0.9	0	361	323	303	305	334	325	654	174	79	62	79	64	78	-0.024	7.72	0.2
475	76.348	76.571	0.16	0.16	1.23	90	3.16	0.96	90	1.6	83	0.170	101	100	0.9	0	360	323	303	305	333	325	653	173	79	62	79	64	78	-0.023	7.72	0.2
476	76.509	76.732	0.16	0.16	1.23	90	3.15	0.96	90	1.6	83	0.170	100	100	0.9	0	360	323	302	305	333	325	652	173	79	63	79	64	78	-0.024	7.69	0.2
477	76.669	76.894	0.16	0.16	1.23	90	3.15	0.96	90	1.6	83	0.170	100	101	0.9	0	360	323	302	305	333	325	651	172	79	63	79	64	78	-0.023	7.63	0.21
478	76.830	77.056	0.16	0.16	1.23	90	3.15	0.96	90	1.6	84	0.171	100	100	0.9	0	359	323	302	305	332	324	650	172	79	63	79	64	78	-0.024	7.6	0.2
479	76.991	77.217	0.16	0.16	1.23	90	3.16	0.96	90	1.6	83	0.170	100	100	0.9	0	359	323	302	305	332	324	649	172	79	63	79	64	78	-0.024	7.52	0.2
480	77.152	77.378	0.16	0.16	1.23	90	3.17	0.96	90	1.6	83	0.167	101	101	0.8	-0.1	358	323	301	305	332	324	647	172	79	63	79	64	78	-0.024	7.26	0.19

Wood Heater Test Data

u

Run: 7

Manufacturer: Kuma Stoves
Model: K-251
Tracking No.: 2464
Project No.: 0123WM014E
Test Date: 11-May-23
Beginning Clock Time: 12:06

Total Sampling Time: 563 min
Recording Interval: 1 min
Tunnel Diameter: 6
Background Sample Volume: 95.509 cubic feet

PM Control Modules: 335,336
Dilution Tunnel MW(dry): 29.00 lb/lb-mole
Dilution Tunnel MW(wet): 28.78 lb/lb-mole
Dilution Tunnel H2O: 2.00 percent
Dilution Tunnel Static: -0.500 "H2O
Tunnel Area: 0.19635 ft2
Pitot Tube Cp: 0.99

Avg. Tunnel Velocity: 25.28 ft/sec.
Initial Tunnel Flow: 286.0 scfm
Average Tunnel Flow: 284.4 scfm
Post-Test Leak Check (1st Hr): 0.001 cfm @ 14 in. Hg
Post-Test Leak Check (1): 0.000 cfm @ 9 in. Hg
Post-Test Leak Check (2): 0.000 cfm @ 14 in. Hg
Average Test Piece Fuel Moisture: 19.98 Dry Basis %

Technician Signature:_____

Meter Box Y Factor: 1.007 (1) 1.015 (2) 1.012 (Amb)

Export to PDF

Barometric Pressure:	Begin	Middle	End	Average
	30.13	30.05	30.05	30.08

Room Air Velocity, fpn
<50

OMNI Equipment Numbers: _____

Velocity Traverse Data

	Pt.1	Pt.2	Pt.3	Pt.4	Pt.5	Pt.6	Pt.7	Pt.8	Center	
Initial dP	0.134	0.160	0.156	0.110	0.138	0.154	0.174	0.124	0.174	"H2O
Temp:	83	83	83	83	83	83	83	83	83	°F

V_{strav} 25.35 ft/sec V_{scent} 27.95 ft/sec F_p 0.907

qwq

	Particulate Sampling Data														Fuel Weight (lb)		Temperature Data (°F)													Stack Gas Data		
Elapsed Time (min)	Gas Meter 1 (ft^3)	Gas Meter 2 (ft^3)	Sample Rate 1 (cfm)	Sample Rate 2 (cfm)	Orifice dH 1 ("H_2O)	Meter 1 Temp (°F)	Meter 1 Vacuum ("Hg)	Orifice dH 2 ("H_2O)	Meter 2 Temp (°F)	Meter 2 Vacuum ("Hg)	Dilution Tunnel (°F)	Dilution Tunnel Center dP	Pro. Rate 1	Pro. Rate 2	Scale Reading	Weight Change	Firebox Top	Firebox Bottom	Firebox Back	Firebox Left	Firebox Right	Avg. Stove Surface (Tot = ΔT)	Catalyst Exit	Stack	Filter 1	Dryer Exit 1	Filter 2	Dryer Exit 2	Ambient	Draft ("H_2O)	CO_2 (%)	CO (%)
481	77.314	77.541	0.16	0.16	1.23	90	3.17	0.96	90	1.6	83	0.169	101	102	0.8	0	357	323	301	304	331	323	645	172	79	63	79	64	78	-0.023	7.25	0.18
482	77.475	77.702	0.16	0.16	1.23	90	3.17	0.95	90	1.6	83	0.168	101	101	0.8	0	357	323	301	304	331	323	643	172	79	63	79	64	78	-0.023	7.32	0.18
483	77.635	77.863	0.16	0.16	1.23	90	3.17	0.95	90	1.6	84	0.169	100	100	0.8	0	356	323	301	304	331	323	641	171	79	63	79	64	78	-0.023	7.3	0.18
484	77.796	78.025	0.16	0.16	1.23	90	3.16	0.96	90	1.6	84	0.169	101	101	0.8	0	355	323	301	304	330	323	639	171	79	63	79	64	78	-0.024	7.24	0.18
485	77.957	78.187	0.16	0.16	1.23	90	3.16	0.96	90	1.6	83	0.167	101	102	0.8	0	354	323	301	304	330	322	637	171	79	63	79	64	78	-0.023	7.19	0.18
486	78.118	78.348	0.16	0.16	1.22	90	3.17	0.95	90	1.6	83	0.168	101	101	0.8	0	353	323	300	303	329	322	635	171	79	63	79	64	78	-0.024	7.22	0.18
487	78.279	78.509	0.16	0.16	1.23	90	3.17	0.95	90	1.6	83	0.170	100	100	0.8	0	353	322	300	303	329	321	634	171	79	63	79	64	78	-0.024	7.2	0.18
488	78.440	78.671	0.16	0.16	1.23	90	3.17	0.96	90	1.6	83	0.170	100	101	0.8	0	352	322	299	303	329	321	632	171	79	63	79	64	78	-0.023	7.19	0.18
489	78.601	78.833	0.16	0.16	1.23	90	3.16	0.96	90	1.6	83	0.171	100	100	0.7	-0.1	351	322	299	303	328	321	631	171	79	63	79	64	78	-0.024	7.19	0.18
490	78.762	78.994	0.16	0.16	1.23	90	3.15	0.96	90	1.6	83	0.169	101	100	0.7	0	350	322	299	302	328	320	630	170	79	63	79	64	78	-0.023	7.18	0.18
491	78.923	79.156	0.16	0.16	1.24	90	3.17	0.96	90	1.6	83	0.169	101	101	0.7	0	350	321	299	302	327	320	628	171	79	63	79	64	78	-0.023	7.08	0.18
492	79.084	79.317	0.16	0.16	1.23	90	3.16	0.96	90	1.6	83	0.170	100	100	0.7	0	349	321	299	302	327	320	627	170	79	63	79	64	78	-0.023	7.13	0.18
493	79.245	79.480	0.16	0.16	1.23	90	3.17	0.96	90	1.6	83	0.170	100	101	0.7	0	348	321	298	301	327	319	626	169	79	63	79	64	78	-0.023	7.1	0.18
494	79.406	79.641	0.16	0.16	1.23	90	3.16	0.96	90	1.6	83	0.169	101	100	0.7	0	347	320	298	301	326	318	625	169	79	63	79	64	78	-0.023	7.19	0.18
495	79.566	79.802	0.16	0.16	1.23	90	3.16	0.96	90	1.6	83	0.170	100	100	0.7	0	347	320	297	301	326	318	623	168	79	63	79	64	78	-0.023	7.11	0.18
496	79.727	79.964	0.16	0.16	1.23	90	3.17	0.96	90	1.6	83	0.168	101	101	0.7	0	346	320	297	300	326	318	622	168	79	63	79	64	78	-0.023	7.08	0.18
497	79.889	80.126	0.16	0.16	1.23	90	3.17	0.96	90	1.6	83	0.170	101	101	0.7	0	345	320	297	300	325	317	621	167	79	63	79	64	78	-0.023	7.11	0.18
498	80.050	80.287	0.16	0.16	1.23	90	3.15	0.96	90	1.6	83	0.167	101	101	0.7	0	345	319	296	300	325	317	620	168	79	63	79	65	78	-0.023	6.96	0.17
499	80.211	80.449	0.16	0.16	1.23	90	3.16	0.96	90	1.6	83	0.168	101	101	0.7	0	344	319	296	299	324	316	618	167	79	63	79	65	78	-0.023	7	0.17
500	80.372	80.611	0.16	0.16	1.23	90	3.17	0.96	90	1.6	83	0.169	101	101	0.6	-0.1	343	319	296	299	324	316	617	167	79	63	79	65	78	-0.023	7	0.17
501	80.532	80.773	0.16	0.16	1.24	90	3.17	0.95	90	1.6	83	0.169	100	101	0.6	0	343	318	295	299	324	316	616	167	79	63	79	65	78	-0.023	7	0.17
502	80.693	80.934	0.16	0.16	1.23	90	3.15	0.96	90	1.6	83	0.169	101	100	0.6	0	342	318	295	298	323	315	614	168	79	63	79	65	78	-0.023	6.87	0.17
503	80.855	81.095	0.16	0.16	1.23	90	3.15	0.96	90	1.6	83	0.170	101	100	0.6	0	341	318	295	298	323	315	613	167	79	63	79	65	78	-0.023	6.88	0.17
504	81.016	81.258	0.16	0.16	1.23	90	3.17	0.96	90	1.6	83	0.170	100	101	0.6	0	341	317	294	297	322	314	612	168	79	63	79	65	78	-0.023	6.87	0.17
505	81.177	81.419	0.16	0.16	1.23	90	3.17	0.96	90	1.6	83	0.168	101	101	0.6	0	340	317	293	297	322	314	611	168	79	63	79	65	78	-0.023	6.82	0.17
506	81.337	81.580	0.16	0.16	1.23	90	3.15	0.96	90	1.6	83	0.169	100	100	0.6	0	339	317	293	296	321	313	611	167	79	63	78	65	78	-0.023	6.87	0.17
507	81.498	81.742	0.16	0.16	1.23	90	3.16	0.96	90	1.6	83	0.169	101	101	0.6	0	339	317	293	296	321	313	609	166	79	63	78	65	78	-0.023	6.83	0.17
508	81.659	81.904	0.16	0.16	1.23	90	3.16	0.96	90	1.6	83	0.168	101	101	0.6	0	338	316	292	295	321	312	608	166	79	63	78	65	78	-0.023	6.78	0.17
509	81.821	82.065	0.16	0.16	1.24	90	3.15	0.96	90	1.6	83	0.170	101	100	0.6	0	337	316	292	295	320	312	607	166	79	63	78	65	78	-0.023	6.72	0.16
510	81.982	82.227	0.16	0.16	1.23	90	3.16	0.96	90	1.6	83	0.170	100	101	0.6	0	336	316	291	295	320	312	606	166	79	64	78	65	78	-0.023	6.69	0.17
511	82.142	82.388	0.16	0.16	1.23	90	3.15	0.96	90	1.6	83	0.169	100	100	0.5	-0.1	336	316	291	294	319	311	604	166	79	64	78	65	78	-0.023	6.74	0.17
512	82.303	82.551	0.16	0.16	1.23	90	3.16	0.96	90	1.6	83	0.168	101	102	0.5	0	335	315	291	294	319	311	603	165	79	64	78	65	78	-0.023	6.7	0.17
513	82.464	82.712	0.16	0.16	1.23	90	3.17	0.96	90	1.6	83	0.170	100	100	0.5	0	334	315	290	293	319	310	602	165	79	64	78	65	78	-0.023	6.74	0.17
514	82.625	82.873	0.16	0.16	1.23	90	3.16	0.96	90	1.6	83	0.171	100	100	0.5	0	333	315	290	293	318	310	601	165	79	64	78	65	78	-0.022	6.84	0.17
515	82.787	83.035	0.16	0.16	1.23	90	3.16	0.96	90	1.6	83	0.167	102	102	0.5	0	333	315	290	292	318	310	601	165	79	64	78	65	78	-0.022	6.93	0.17
516	82.947	83.197	0.16	0.16	1.23	90	3.17	0.96	90	1.6	83	0.169	100	101	0.5	0	332	315	289	292	317	309	599	165	79	64	78	65	78	-0.023	6.85	0.17
517	83.108	83.358	0.16	0.16	1.23	90	3.17	0.96	90	1.6	83	0.169	101	100	0.5	0	332	314	289	292	317	309	598	164	79	64	78	65	78	-0.023	6.89	0.17
518	83.269	83.519	0.16	0.16	1.24	90	3.16	0.96	90	1.6	83	0.166	102	101	0.5	0	331	314	289	291	316	308	597	165	79	64	78	65	78	-0.022	7.46	0.17
519	83.429	83.681	0.16	0.16	1.23	90	3.15	0.96	90	1.6	83	0.171	99	100	0.5	0	331	314	288	291	316	308	597	164	79	64	78	65	78	-0.022	7.87	0.16
520	83.591	83.843	0.16	0.16	1.23	90	3.16	0.96	90	1.6	82	0.168	101	101	0.4	-0.1	331	314	288	290	316	308	598	165	79	64	78	65	78	-0.022	7.95	0.15
521	83.752	84.004	0.16	0.16	1.23	90	3.16	0.96	90	1.6	83	0.168	101	101	0.4	0	330	313	287	290	315	307	598	165	79	64	78	65	78	-0.022	7.72	0.15
522	83.913	84.166	0.16	0.16	1.23	90	3.17	0.96	90	1.6	83	0.169	101	101	0.4	0	330	313	287	290	315	307	599	164	79	64	78	65	78	-0.022	7.58	0.15
523	84.074	84.328	0.16	0.16	1.23	90	3.16	0.96	90	1.6	82	0.169	101	101	0.4	0	329	313	287	289	315	307	599	164	79	64	78	65	78	-0.022	7.43	0.15
524	84.234	84.490	0.16	0.16	1.24	90	3.15	0.96	90	1.6	83	0.170	100	101	0.4	0	329	313	287	289	314	306	598	164	79	64	78	65	78	-0.022	7.46	0.15

Wood Heater Test Data

u

Run: 7

Manufacturer: Kuma Stoves
Model: K-251
Tracking No.: 2464
Project No.: 0123WM014E
Test Date: 11-May-23
Beginning Clock Time: 12:06

Total Sampling Time: 563 min
Recording Interval: 1 min
Tunnel Diameter: 6
Background Sample Volume: 95.509 cubic feet

PM Control Modules: 335,336
Dilution Tunnel MW(dry): 29.00 lb/lb-mole
Dilution Tunnel MW(wet): 28.78 lb/lb-mole
Dilution Tunnel H2O: 2.00 percent
Dilution Tunnel Static: -0.500 "H2O
Tunnel Area: 0.19635 ft2
Pitot Tube Cp: 0.99

Avg. Tunnel Velocity: 25.28 ft/sec.
Initial Tunnel Flow: 286.0 scfm
Average Tunnel Flow: 284.4 scfm
Post-Test Leak Check (1st Hr): 0.001 cfm @ 14 in. Hg
Post-Test Leak Check (1): 0.000 cfm @ 9 in. Hg
Post-Test Leak Check (2): 0.000 cfm @ 14 in. Hg
Average Test Piece Fuel Moisture: 19.98 Dry Basis %

Technician Signature:_____

Meter Box Y Factor: 1.007 (1) 1.015 (2) 1.012 (Amb)

Export to PDF

Barometric Pressure:	Begin	Middle	End	Average
	30.13	30.05	30.05	30.08

Room Air Velocity, fpn
<50

OMNI Equipment Numbers: _____

Velocity Traverse Data

	Pt.1	Pt.2	Pt.3	Pt.4	Pt.5	Pt.6	Pt.7	Pt.8	Center	
Initial dP	0.134	0.160	0.156	0.110	0.138	0.154	0.174	0.124	0.174	"H2O
Temp:	83	83	83	83	83	83	83	83	83	°F

V_{strav} 25.35 ft/sec V_{scent} 27.95 ft/sec F_p 0.907

qwq

	Particulate Sampling Data														Fuel Weight (lb)		Temperature Data (°F)													Stack Gas Data		
Elapsed Time (min)	Gas Meter 1 (ft^3)	Gas Meter 2 (ft^3)	Sample Rate 1 (cfm)	Sample Rate 2 (cfm)	Orifice dH 1 ("H_2O)	Meter 1 Temp (°F)	Meter 1 Vacuum ("Hg)	Orifice dH 2 ("H_2O)	Meter 2 Temp (°F)	Meter 2 Vacuum ("Hg)	Dilution Tunnel (°F)	Dilution Tunnel Center dP	Pro. Rate 1	Pro. Rate 2	Scale Reading	Weight Change	Firebox Top	Firebox Bottom	Firebox Back	Firebox Left	Firebox Right	Avg. Stove Surface (Tot = ΔT)	Catalyst Exit	Stack	Filter 1	Dryer Exit 1	Filter 2	Dryer Exit 2	Ambient	Draft ("H_2O)	CO_2 (%)	CO (%)
525	84.395	84.651	0.16	0.16	1.23	90	3.15	0.96	90	1.6	83	0.170	100	100	0.4	0	329	313	287	289	314	306	598	163	79	64	78	65	78	-0.023	7.47	0.16
526	84.558	84.813	0.16	0.16	1.23	90	3.16	0.95	90	1.6	82	0.168	102	101	0.4	0	329	312	286	288	313	306	597	163	79	64	78	65	78	-0.022	7.34	0.17
527	84.718	84.975	0.16	0.16	1.23	90	3.15	0.96	90	1.6	82	0.172	99	100	0.4	0	329	312	286	288	313	306	597	164	79	64	78	65	78	-0.022	7.27	0.17
528	84.879	85.136	0.16	0.16	1.23	90	3.17	0.95	90	1.6	82	0.170	100	100	0.4	0	329	312	286	288	313	306	598	164	79	64	78	65	78	-0.022	7.27	0.18
529	85.040	85.298	0.16	0.16	1.23	90	3.15	0.96	90	1.6	82	0.169	101	101	0.4	0	329	311	285	287	313	305	598	164	79	64	78	65	78	-0.023	7.15	0.18
530	85.200	85.459	0.16	0.16	1.23	90	3.16	0.96	90	1.6	83	0.169	100	100	0.4	0	329	311	285	287	312	305	598	164	79	64	78	65	78	-0.023	7.13	0.17
531	85.362	85.622	0.16	0.16	1.24	90	3.17	0.96	90	1.6	83	0.170	101	101	0.3	-0.1	330	311	285	287	312	305	598	164	79	64	78	66	78	-0.023	7.13	0.18
532	85.523	85.783	0.16	0.16	1.23	90	3.15	0.96	90	1.6	82	0.168	101	101	0.3	0	330	311	284	286	311	304	598	164	79	64	78	65	78	-0.023	7.1	0.18
533	85.684	85.944	0.16	0.16	1.23	90	3.15	0.96	90	1.6	82	0.168	101	101	0.3	0	330	310	284	286	311	304	598	164	79	64	78	66	78	-0.023	6.95	0.17
534	85.845	86.106	0.16	0.16	1.23	90	3.17	0.96	90	1.6	82	0.168	101	101	0.3	0	330	310	284	286	311	304	598	164	79	64	78	66	78	-0.023	6.98	0.18
535	86.005	86.268	0.16	0.16	1.23	90	3.15	0.96	90	1.6	82	0.169	100	101	0.3	0	329	309	283	285	310	303	597	164	79	64	78	66	78	-0.023	6.9	0.17
536	86.166	86.430	0.16	0.16	1.23	90	3.16	0.95	90	1.6	82	0.167	101	101	0.3	0	329	309	283	285	310	303	596	164	79	64	78	66	78	-0.023	6.92	0.17
537	86.328	86.591	0.16	0.16	1.23	90	3.16	0.96	90	1.6	82	0.168	101	101	0.3	0	329	309	283	284	310	303	596	164	79	64	78	66	78	-0.023	6.87	0.17
538	86.489	86.752	0.16	0.16	1.23	90	3.17	0.96	90	1.6	82	0.168	101	101	0.3	0	329	308	282	284	309	302	594	164	79	64	78	66	78	-0.022	6.79	0.17
539	86.650	86.915	0.16	0.16	1.23	90	3.15	0.96	90	1.6	82	0.168	101	102	0.3	0	328	308	282	284	309	302	593	164	79	64	78	66	78	-0.023	6.8	0.17
540	86.810	87.076	0.16	0.16	1.23	90	3.17	0.95	90	1.6	82	0.168	100	101	0.3	0	328	308	282	283	309	302	592	164	79	64	78	66	78	-0.022	6.8	0.17
541	86.971	87.237	0.16	0.16	1.23	90	3.16	0.96	90	1.6	82	0.168	101	101	0.2	-0.1	328	307	281	283	308	301	591	164	79	64	78	66	78	-0.023	6.81	0.17
542	87.132	87.399	0.16	0.16	1.23	90	3.16	0.96	90	1.6	82	0.171	100	100	0.2	0	327	307	281	282	308	301	590	164	79	64	78	66	78	-0.022	6.67	0.17
543	87.294	87.562	0.16	0.16	1.22	90	3.17	0.96	90	1.6	82	0.170	101	101	0.2	0	327	307	281	282	308	301	589	164	79	64	78	66	78	-0.023	6.62	0.17
544	87.455	87.723	0.16	0.16	1.23	90	3.15	0.96	90	1.6	82	0.170	100	100	0.2	0	326	306	280	281	307	300	588	163	79	64	78	66	78	-0.023	6.63	0.17
545	87.616	87.884	0.16	0.16	1.23	90	3.17	0.96	90	1.6	82	0.169	101	100	0.2	0	326	306	280	281	307	300	587	164	79	64	78	66	78	-0.023	6.51	0.16
546	87.776	88.046	0.16	0.16	1.23	90	3.16	0.96	90	1.6	82	0.167	101	101	0.2	0	325	306	279	281	307	300	585	163	79	64	78	66	78	-0.023	6.47	0.16
547	87.937	88.208	0.16	0.16	1.23	90	3.15	0.96	90	1.6	82	0.169	101	101	0.2	0	324	305	279	280	307	299	584	163	79	64	78	66	78	-0.022	6.51	0.16
548	88.098	88.369	0.16	0.16	1.24	90	3.15	0.96	90	1.6	82	0.168	101	101	0.2	0	324	305	278	280	307	299	583	162	79	64	78	66	78	-0.022	6.5	0.16
549	88.260	88.531	0.16	0.16	1.23	90	3.15	0.96	90	1.6	82	0.169	101	101	0.2	0	323	305	278	279	306	298	582	162	79	64	78	66	78	-0.022	6.45	0.16
550	88.421	88.693	0.16	0.16	1.23	90	3.16	0.96	90	1.6	82	0.172	100	100	0.2	0	323	304	277	279	306	298	580	162	79	65	78	66	78	-0.023	6.49	0.16
551	88.581	88.855	0.16	0.16	1.23	90	3.17	0.95	90	1.6	82	0.168	100	101	0.2	0	322	304	277	278	306	297	579	162	79	65	78	66	78	-0.022	6.48	0.16
552	88.742	89.016	0.16	0.16	1.23	90	3.17	0.96	90	1.6	82	0.166	101	101	0.2	0	322	304	276	277	306	297	578	162	79	65	78	66	78	-0.022	6.47	0.16
553	88.903	89.178	0.16	0.16	1.23	90	3.16	0.96	90	1.6	82	0.168	101	101	0.1	-0.1	321	303	275	277	306	296	577	162	79	65	78	66	78	-0.022	6.46	0.16
554	89.064	89.340	0.16	0.16	1.24	90	3.15	0.96	90	1.6	82	0.169	101	101	0.1	0	321	303	274	277	306	296	576	162	79	65	78	66	78	-0.023	6.47	0.16
555	89.226	89.502	0.16	0.16	1.23	90	3.17	0.96	90	1.6	82	0.168	101	101	0.1	0	320	303	274	276	306	296	575	162	79	65	78	66	77	-0.023	6.53	0.16
556	89.387	89.663	0.16	0.16	1.23	90	3.17	0.96	90	1.6	81	0.172	100	99	0.1	0	320	302	273	276	306	295	574	162	79	65	78	66	78	-0.023	6.58	0.16
557	89.548	89.825	0.16	0.16	1.23	90	3.17	0.96	90	1.6	82	0.170	100	101	0.1	0	320	302	273	275	306	295	573	162	79	65	78	66	78	-0.022	6.87	0.17
558	89.708	89.987	0.16	0.16	1.24	90	3.15	0.96	90	1.6	82	0.171	99	100	0.1	0	319	302	272	275	306	295	573	162	79	65	78	66	78	-0.022	7.3	0.18
559	89.869	90.149	0.16	0.16	1.24	90	3.17	0.95	90	1.6	82	0.170	100	101	0.1	0	320	301	272	274	306	295	574	162	79	65	78	66	77	-0.022	7.36	0.19
560	90.031	90.310	0.16	0.16	1.23	90	3.16	0.96	90	1.6	81	0.168	101	100	0.1	0	320	301	271	274	306	294	575	162	79	65	78	66	77	-0.022	7.37	0.19
561	90.192	90.471	0.16	0.16	1.24	90	3.17	0.96	90	1.6	82	0.171	100	100	0.1	0	321	301	270	273	306	294	577	162	78	65	78	66	77	-0.022	7.39	0.19
562	90.353	90.634	0.16	0.16	1.23	90	3.16	0.95	90	1.6	81	0.171	100	101	0.1	0	321	300	269	273	306	294	578	163	78	65	78	66	77	-0.022	7.43	0.19
563	90.513	90.796	0.16	0.16	1.23	90	3.15	0.95	90	1.6	81	0.169	100	101	0.0	-0.1	321	300	268	272	306	293	579	163	78	65	78	66	77	-0.022	7.35	0.19

Wood Heater Lab Data - ASTM E2780 / ASTM E2515

Manufacturer: Kuma Stoves
Model: K-251
Tracking No.: 2464
Project No.: 0123WM014E
Run #: 7
Date: 5/11/23

Equipment Numbers:

TRAIN 1 (First Hour emissions)

Sample Component	Reagent	Filter, Probe or Dish #	Weights		
			Final, mg	Tare, mg	Particulate, mg
B. Front filter catch	Filter	E918	117.7	117.1	0.6
C. Rear filter catch	Filter	E919	117.5	117.8	-0.3
D. Probe catch*	Probe	6	115346.2	115345.7	0.5
E. Filter seals catch*	Seals	S503	4101.6	4101.2	0.4

Sub-Total Total Particulate, mg: 1.2

TRAIN 1 (Post First Hour Change-out)

Sample Component	Reagent	Filter, Probe or Dish #	Weights		
			Final, mg	Tare, mg	Particulate, mg
B. Front filter catch	Filter	E920	122.3	117.1	5.2
C. Rear filter catch	Filter	E949	119.5	119.0	0.5
D. Probe catch*	Probe	20	114254.7	114254.4	0.3
E. Filter seals catch*	Seals	S488	3346.1	3345.4	0.7

Sub-Total Total Particulate, mg: 6.7

Train 1 Aggregate Total Particulate, mg: **7.9**

TRAIN 2

Sample Component	Reagent	Filter, Probe or Dish #	Weights		
			Final, mg	Tare, mg	Particulate, mg
A. Front filter catch	Filter	E950	123.9	116.8	7.1
B. Rear filter catch	Filter	E951	117.7	117.0	0.7
C. Probe catch*	Probe	69	117372.4	117371.9	0.5
D. Filter seals catch*	Seals	S502	3418.7	3418.6	0.1

Total Particulate, mg: **8.4**

AMBIENT

Sample Component	Reagent	Filter # or Probe #	Weights		
			Final, mg	Tare, mg	Particulate, mg
A. Front filter catch*	Filter	E952	118.5	118.5	0.0

Total Particulate, mg: **0.0**

*Particulate catch that results in a negative number, is assumed to be zero for probes and seals, negative numbers for filters are assumed to be part of the seal weight.

Component	Equations:
A. Front filter catch	Final (mg) - Tare (mg) = Particulate, mg
B. Rear filter catch	Final (mg) - Tare (mg) = Particulate, mg
C. Probe catch	Final (mg) - Tare (mg) = Particulate, mg

Technician Signature:_____

Wood Heater Test Results - ASTM E2780 / ASTM E2515

Manufacturer: Kuma Stoves
Model: K-251
Project No.: 0123WM014E
Tracking No.: 2464
Run: 7
Test Date: 05/11/23

Technician Signature:_____

Burn Rate	**0.72**	**kg/hr dry**
Average Tunnel Temperature	84	degrees Fahrenheit
Average Gas Velocity in Dilution Tunnel - vs	25.28	feet/second
Average Gas Flow Rate in Dilution Tunnel - Qsd	17066.7	dscf/hour
Average Delta p	0.173	inches H20
Total Time of Test	563	minutes

	AMBIENT		SAMPLE TRAIN 1		SAMPLE TRAIN 2		FIRST HOUR FILTER (TRAIN 1)	
Total Sample Volume - Vm	95.509	cubic feet	90.513	cubic feet	90.796	cubic feet	9.642	cubic feet
Average Gas Meter Temperature	77	degrees Fahrenheit	88	degrees Fahrenheit	87	degrees Fahrenheit	80	degrees Fahrenheit
Total Sample Volume (Standard Conditions) - Vmstd	95.519	dscf	88.576	dscf	89.522	dscf	9.563	dscf
Total Particulates - m_n	0	mg	7.9	mg	8.4	mg	1.2	mg
Particulate Concentration (dry-standard) - C_r/C_s	0.000000	grams/dscf	0.00009	grams/dscf	0.00009	grams/dscf	0.00013	grams/dscf
Total Particulate Emissions - E_T	0.00	grams	14.28	grams	15.03	grams	2.14	grams
Particulate Emission Rate	0.00	grams/hour	1.52	grams/hour	1.60	grams/hour	2.14	grams/hour
Emissions Factor			2.11	g/kg	2.22	g/kg	1.89	g/kg
Difference from Average Total Particulate Emissions			0.37	grams	0.37	grams		

Final Average Results		
Complete Test Run		
Total Particulate Emissions - E_T	14.65	grams
Particulate Emission Rate	**1.56**	**grams/hour**
Emissions Factor	2.17	grams/kg
First Hour Emissions		
Total Particulate Emissions - E_T	2.14	grams
Particulate Emission Rate	2.14	grams/hour
Emissions Factor	1.89	grams/kg
7.5% of Average Total Particulate Emissions	1.10	grams

Quality Checks	Requirement	Measured / Observed: First Hour	Train 1	Train 2	Complies?
Filter Temps, °F	< 90	75	79	79	OK
Filter Face Velocity, fpm	< 30	8.73	8.73	8.73	OK
Dryer Exit Temp, °F	< 80	57	65	66	OK
Leakage Rate, cfm < 4% of avg sample rate or < 0.01 cfm, lesser of the two	0.01	0.001	0.000	0.000	OK
Neg. Probe Weight	=> 0	0.5	0.3	0.5	OK
Pro-Rate Variation	< 90 for < 10% of θ	0.00%	0.00%	0.00%	OK
	> 110 for < 10% of θ	0.00%	0.00%	0.00%	OK
	# Readings < 80%	0	0	0	OK
	# Readings > 120%	0	0	0	OK
Ambient Temp, °F (min / max)	< 55	74			OK
	> 90	78			OK
Train Precision	(*A*) Within 7.5%	2.5%			OK
One of *A* or *B* must	(*B*) Within 0.5 g/kg	0.11			
Stove Surface ΔT	Within 125 °F	93			OK
Room Air Velocity	< 50 fpm	<50			OK

Wood Heater Lab Data - ASTM E2780 / ASTM E2515

Manufacturer:	Kuma Stoves	Equipment Numbers:	
Model:	K-251		
Tracking No.:	2464		
Project No.:	0123WM014E		
Run #:	7		
Date:	5/11/23		

Uncorrected

TRAIN 1 (First Hour emissions)

Sample Component	Reagent	Filter, Probe or Dish #	Weights		
			Final, mg	Tare, mg	Particulate, mg
B. Front filter catch	Filter	E918	117.7	117.1	0.6
C. Rear filter catch	Filter	E919	117.5	117.8	0.0
D. Probe catch*	Probe	6	115346.2	115345.7	0.5
E. Filter seals catch*	Seals	S503	4101.6	4101.2	0.4

Sub-Total	Total Particulate, mg:	1.5

TRAIN 1 (Post First Hour Change-out)

Sample Component	Reagent	Filter, Probe or Dish #	Weights		
			Final, mg	Tare, mg	Particulate, mg
B. Front filter catch	Filter	E920	122.3	117.1	5.2
C. Rear filter catch	Filter	E949	119.5	119.0	0.5
D. Probe catch*	Probe	20	114254.7	114254.4	0.3
E. Filter seals catch*	Seals	S488	3346.1	3345.4	0.7

Sub-Total	Total Particulate, mg:	6.7
Train 1 Aggregate	Total Particulate, mg:	**8.2**

TRAIN 2

Sample Component	Reagent	Filter, Probe or Dish #	Weights		
			Final, mg	Tare, mg	Particulate, mg
A. Front filter catch	Filter	E950	123.9	116.8	7.1
B. Rear filter catch	Filter	E951	117.7	117.0	0.7
C. Probe catch*	Probe	69	117372.4	117371.9	0.5
D. Filter seals catch*	Seals	S502	3418.7	3418.6	0.1

Total Particulate, mg:	**8.4**

AMBIENT

Sample Component	Reagent	Filter # or Probe #	Weights		
			Final, mg	Tare, mg	Particulate, mg
A. Front filter catch*	Filter	E952	118.5	118.5	0.0

Total Particulate, mg:	**0.0**

*Particulate catch that results in a negative number, is assumed to be zero for probes and seals, negative numbers for filters are assumed to be part of the seal weight.

Component	Equations:
A. Front filter catch	Final (mg) - Tare (mg) = Particulate, mg
B. Rear filter catch	Final (mg) - Tare (mg) = Particulate, mg
C. Probe catch	Final (mg) - Tare (mg) = Particulate, mg

Technician Signature:_____

Wood Heater Test Results - ASTM E2780 / ASTM E2515

Manufacturer: Kuma Stoves
Model: K-251
Project No.: 0123WM014E
Tracking No.: 2464
Run: 7
Test Date: 05/11/23

Technician Signature:_____

Burn Rate	**0.72**	**kg/hr dry**
Average Tunnel Temperature	84	degrees Fahrenheit
Average Gas Velocity in Dilution Tunnel - vs	25.28	feet/second
Average Gas Flow Rate in Dilution Tunnel - Qsd	17066.7	dscf/hour
Average Delta p	0.173	inches H20
Total Time of Test	563	minutes

Uncorrected

	AMBIENT		SAMPLE TRAIN 1		SAMPLE TRAIN 2		FIRST HOUR FILTER (TRAIN 1)	
Total Sample Volume - Vm	95.509	cubic feet	90.513	cubic feet	90.796	cubic feet	9.642	cubic feet
Average Gas Meter Temperature	77	degrees Fahrenheit	88	degrees Fahrenheit	87	degrees Fahrenheit	80	degrees Fahrenheit
Total Sample Volume (Standard Conditions) - Vmstd	95.519	dscf	88.576	dscf	89.522	dscf	9.563	dscf
Total Particulates - m_n	0	mg	8.2	mg	8.4	mg	1.5	mg
Particulate Concentration (dry-standard) - C_r/C_s	0.000000	grams/dscf	0.00009	grams/dscf	0.00009	grams/dscf	0.00016	grams/dscf
Total Particulate Emissions - E_T	0.00	grams	14.83	grams	15.03	grams	2.68	grams
Particulate Emission Rate	0.00	grams/hour	1.58	grams/hour	1.60	grams/hour	2.68	grams/hour
Emissions Factor			2.19	g/kg	2.22	g/kg	2.36	g/kg
Difference from Average Total Particulate Emissions			0.10	grams	0.10	grams		

Final Average Results		
Complete Test Run		
Total Particulate Emissions - E_T	14.93	grams
Particulate Emission Rate	**1.59**	**grams/hour**
Emissions Factor	2.21	grams/kg
First Hour Emissions		
Total Particulate Emissions - E_T	2.68	grams
Particulate Emission Rate	2.68	grams/hour
Emissions Factor	2.36	grams/kg
7.5% of Average Total Particulate Emissions	1.12	grams

Quality Checks	Requirement	Measured / Observed: First Hour	Train 1	Train 2	Complies?
Filter Temps, °F	< 90	75	79	79	OK
Filter Face Velocity, fpm	< 30	8.73	8.73	8.73	OK
Dryer Exit Temp, °F	< 80	57	65	66	OK
Leakage Rate, cfm < 4% of avg sample rate or < 0.01 cfm, lesser of the two	0.01	0.001	0.000	0.000	OK
Neg. Probe Weight	=> 0	0.5	0.3	0.5	OK
Pro-Rate Variation	< 90 for < 10% of θ	0.00%	0.00%	0.00%	OK
	> 110 for < 10% of θ	0.00%	0.00%	0.00%	OK
	# Readings < 80%	0	0	0	OK
	# Readings > 120%	0	0	0	OK
Ambient Temp, °F (min / max)	< 55	74			OK
	> 90	78			OK
Train Precision One of *A* or *B* must	(*A*) Within 7.5%	0.7%			OK
	(*B*) Within 0.5 g/kg	0.03			
Stove Surface ΔT	Within 125 °F	93			OK
Room Air Velocity	< 50 fpm	<50			OK

VERSION:	2.4	4/15/2010			
Manufacturer:	Kuma Stoves		Appliance Type:	Cat	(Cat, Non-Cat, Pellet)
Model:	K-251				
Date:	5/11/2023		Temp. Units	F	(F or C)
Run:	7		Weight Units	lb	(kg or lb)
Control #:	2464				
Test Duration:	563				
Output Category:	I		Fuel Data		
				D. Fir	
Wood Moisture (% wet):	16.65		HHV	19,810	kJ/kg
Load Weight (lb wet):	17.90		%C	48.73	
Burn Rate (dry kg/h):	0.72		%H	6.87	
Total Particulate Emissions:	14.65 g		%O	43.9	
			%Ash	0.5	

Default Fuel Values

	D. Fir	Oak
HHV (kJ/kg)	19,810	19,887
%C	48.73	50
%H	6.87	6.6
%O	43.9	42.9
%Ash	0.5	0.5

Note 1: For other fuels, use the heating value and fuel composition determined by analysis of fuel sample in accordance with Clause 9.2.

Note 2: In cases where the "Fuel Weight Remaining" is the same for three or more readings in a row, a "divide by zero error" will occur in the calculation sheet. In such cases, adjust the weight values by interpolation between the first occurence and the next reading showing a decrease in weight.

	Averages	0.23	9.12	#DIV/0!	213.99	76.87
					Temp. (ºF)	
Elapsed Time (min)	Fuel Weight Remaining (lb)	Flue Gas Composition (%) CO	CO_2	O_2	Flue Gas	Room Temp
0	17.90	0.70	3.53		305.0	75.0
1	17.90	0.39	1.65		350.0	75.0
2	17.90	1.03	4.09		276.0	75.0
3	17.80	0.36	4.80		314.0	75.0
4	17.70	0.10	7.93		284.0	75.0
5	17.70	0.08	5.50		257.0	75.0
6	17.60	0.07	5.30		245.0	75.0
7	17.60	0.07	5.36		239.0	75.0
8	17.60	0.07	5.35		235.0	75.0
9	17.50	0.07	5.50		232.0	75.0
10	17.50	0.08	5.61		230.0	75.0
11	17.50	0.08	5.58		229.0	75.0
12	17.40	0.09	5.37		228.0	75.0
13	17.40	0.10	5.37		226.0	74.0
14	17.30	0.10	5.41		226.0	75.0
15	17.30	0.10	5.59		225.0	74.0
16	17.30	0.10	5.60		225.0	75.0
17	17.20	0.10	5.75		226.0	74.0
18	17.20	0.10	5.69		226.0	74.0

19	17.10	0.10	5.95		225.0	74.0
20	17.10	0.10	6.12		226.0	74.0
21	17.00	0.10	6.24		227.0	74.0
22	17.00	0.10	6.31		227.0	74.0
23	16.90	0.11	6.33		229.0	74.0
24	16.90	0.12	6.52		229.0	74.0
25	16.80	0.12	6.56		230.0	74.0
26	16.80	0.12	6.63		230.0	74.0
27	16.70	0.12	6.51		231.0	74.0
28	16.70	0.13	6.50		231.0	74.0
29	16.60	0.13	6.47		231.0	74.0
30	16.60	0.13	6.45		231.0	74.0
31	16.50	0.13	6.57		231.0	74.0
32	16.50	0.13	6.57		230.0	74.0
33	16.40	0.13	6.55		229.0	74.0
34	16.30	0.14	6.55		228.0	74.0
35	16.30	0.14	6.59		228.0	74.0
36	16.20	0.14	6.61		227.0	74.0
37	16.20	0.14	6.72		226.0	74.0
38	16.10	0.14	6.73		226.0	74.0
39	16.10	0.14	6.83		226.0	74.0
40	16.00	0.15	6.90		225.0	74.0
41	16.00	0.15	6.94		225.0	74.0
42	15.90	0.15	7.00		224.0	74.0
43	15.90	0.15	7.01		224.0	74.0
44	15.80	0.15	7.08		224.0	74.0
45	15.80	0.15	7.12		223.0	74.0
46	15.70	0.15	7.18		222.0	74.0
47	15.70	0.16	7.26		222.0	74.0
48	15.60	0.16	7.32		223.0	74.0
49	15.50	0.16	7.42		223	74
50	15.50	0.17	7.55		222	74
51	15.40	0.17	7.57		223	74
52	15.40	0.17	7.66		223	74
53	15.30	0.18	7.84		224	74
54	15.30	0.18	7.82		224	74
55	15.20	0.18	8.01		224	74
56	15.20	0.19	8.16		226	74
57	15.10	0.19	8.3		227	74

58	15.10	0.19	8.28		227	74
59	15.00	0.19	8.29		228	75
60	14.90	0.2	8.42		229	74
61	14.90	0.2	8.44		231	75
62	14.80	0.2	8.53		231	74
63	14.80	0.21	8.75		232	74
64	14.70	0.22	8.85		232	74
65	14.60	0.24	8.81		233	74
66	14.60	0.25	8.94		234	74
67	14.50	0.25	8.81		234	74
68	14.50	0.25	8.79		235	74
69	14.40	0.25	8.84		236	74
70	14.40	0.24	8.75		236	74
71	14.30	0.25	8.88		237	74
72	14.30	0.25	9.09		238	74
73	14.20	0.25	9.14		238	74
74	14.10	0.25	9.2		238	75
75	14.10	0.26	9.35		239	75
76	14.00	0.26	9.39		240	75
77	14.00	0.26	9.55		242	75
78	13.90	0.26	9.59		242	75
79	13.80	0.26	9.66		243	75
80	13.80	0.26	9.76		244	75
81	13.70	0.26	9.83		245	75
82	13.70	0.27	9.96		247	75
83	13.60	0.27	9.98		247	75
84	13.50	0.27	10.1		248	75
85	13.50	0.27	10.11		249	75
86	13.40	0.27	10.33		249	75
87	13.30	0.27	10.19		251	75
88	13.30	0.26	10.13		251	75
89	13.20	0.27	10.33		252	75
90	13.10	0.27	10.38		253	75
91	13.10	0.27	10.49		254	75
92	13.00	0.28	10.61		255	75
93	13.00	0.28	10.61		256	75
94	12.90	0.28	10.65		256	75
95	12.80	0.28	10.9		257	75
96	12.80	0.29	11.05		258	75

97	12.70	0.29	11.15		259	75
98	12.60	0.29	11.29		259	75
99	12.60	0.29	11.36		261	75
100	12.50	0.29	11.4		261	75
101	12.40	0.3	11.48		263	75
102	12.40	0.3	11.46		263	75
103	12.30	0.29	11.44		264	75
104	12.20	0.29	11.39		265	75
105	12.20	0.3	11.48		266	75
106	12.10	0.29	11.42		266	75
107	12.00	0.3	11.65		267	75
108	12.00	0.3	11.7		268	75
109	11.90	0.3	11.7		268	75
110	11.80	0.29	11.59		269	75
111	11.80	0.3	11.68		270	75
112	11.70	0.3	11.82		270	75
113	11.60	0.3	11.72		271	75
114	11.60	0.3	11.95		272	75
115	11.50	0.3	12.04		272	75
116	11.40	0.3	12.23		273	75
117	11.30	0.31	12.35		274	75
118	11.30	0.31	12.59		274	75
119	11.20	0.32	12.79		276	75
120	11.10	0.32	12.83		277	75
121	11.10	0.32	12.98		277	75
122	11.00	0.32	12.98		278	75
123	10.90	0.32	12.96		278	75
124	10.80	0.32	12.86		280	75
125	10.80	0.31	12.64		280	75
126	10.70	0.31	12.4		279	75
127	10.60	0.31	12.31		279	75
128	10.60	0.3	12.19		279	75
129	10.50	0.29	12.04		279	75
130	10.40	0.29	11.84		278	75
131	10.40	0.29	11.73		277	75
132	10.30	0.28	11.63		277	76
133	10.20	0.28	11.58		277	76
134	10.20	0.28	11.52		276	76
135	10.10	0.28	11.53		275	75

136	10.10	0.28	11.54		274	76
137	10.00	0.28	11.45		273	76
138	9.90	0.28	11.5		273	75
139	9.90	0.28	11.41		272	76
140	9.80	0.28	11.38		271	76
141	9.80	0.28	11.34		271	75
142	9.70	0.27	11.19		270	76
143	9.70	0.27	11.15		269	76
144	9.60	0.27	11.04		268	76
145	9.60	0.27	11.04		268	76
146	9.50	0.27	11.01		267	76
147	9.40	0.26	10.93		266	76
148	9.40	0.26	10.85		265	76
149	9.30	0.26	10.86		264	76
150	9.30	0.26	10.79		263	76
151	9.20	0.26	10.83		262	76
152	9.20	0.26	10.77		261	76
153	9.10	0.25	10.73		260	76
154	9.10	0.25	10.7		259	76
155	9.00	0.25	10.67		259	76
156	9.00	0.25	10.73		258	76
157	8.90	0.25	10.73		258	76
158	8.90	0.25	10.81		258	76
159	8.80	0.25	10.75		257	76
160	8.80	0.25	10.83		256	76
161	8.70	0.26	10.91		255	76
162	8.70	0.26	10.86		255	76
163	8.60	0.25	10.89		255	76
164	8.60	0.25	10.85		254	76
165	8.50	0.25	10.85		254	76
166	8.50	0.26	10.96		254	76
167	8.40	0.26	10.93		253	76
168	8.40	0.25	10.94		253	76
169	8.30	0.25	10.89		253	76
170	8.30	0.25	10.92		252	76
171	8.20	0.25	10.96		252	76
172	8.20	0.26	11.06		251	76
173	8.10	0.25	10.94		251	76
174	8.10	0.25	10.88		250	76

175	8.00	0.26	10.96		251	76
176	8.00	0.26	10.95		250	76
177	7.90	0.26	10.92		250	76
178	7.90	0.26	10.98		249	76
179	7.80	0.26	10.94		249	76
180	7.80	0.26	11.01		249	76
181	7.70	0.26	11.07		249	76
182	7.70	0.26	11.18		248	76
183	7.70	0.26	11.16		249	76
184	7.60	0.26	11.29		249	76
185	7.60	0.26	11.38		249	76
186	7.50	0.27	11.45		249	76
187	7.50	0.27	11.57		249	76
188	7.40	0.28	11.76		250	76
189	7.30	0.28	11.84		250	76
190	7.30	0.28	12.05		251	76
191	7.20	0.29	12.16		251	76
192	7.20	0.29	12.22		252	76
193	7.10	0.29	12.52		253	76
194	7.10	0.3	12.71		253	77
195	7.00	0.3	12.58		254	77
196	7.00	0.3	12.39		254	76
197	6.90	0.29	12.26		255	77
198	6.80	0.3	12.36		254	77
199	6.80	0.3	12.3		255	77
200	6.70	0.3	12.18		254	77
201	6.70	0.29	12.14		255	77
202	6.60	0.3	12.28		255	77
203	6.60	0.3	12.15		255	77
204	6.50	0.3	12.29		256	77
205	6.50	0.3	12.37		255	77
206	6.40	0.3	11.99		255	77
207	6.40	0.27	10.89		254	77
208	6.30	0.3	11.98		255	77
209	6.30	0.3	12.13		254	77
210	6.20	0.3	12.18		254	77
211	6.20	0.3	12.28		254	77
212	6.20	0.3	12.22		254	77
213	6.10	0.29	12.17		253	77

214	6.10	0.3	12.31		254	77
215	6.00	0.3	12.31		253	77
216	6.00	0.3	12.36		253	77
217	5.90	0.3	12.35		253	77
218	5.90	0.3	12.29		253	77
219	5.80	0.3	12.28		252	77
220	5.80	0.3	12.22		253	77
221	5.70	0.3	12.18		252	77
222	5.70	0.3	12.28		252	77
223	5.60	0.3	12.29		252	77
224	5.60	0.3	12.31		252	77
225	5.50	0.3	12.39		253	77
226	5.50	0.3	12.33		252	77
227	5.40	0.3	12.42		252	77
228	5.40	0.3	12.43		253	77
229	5.30	0.3	12.54		252	77
230	5.30	0.3	12.51		252	77
231	5.20	0.3	12.44		252	77
232	5.20	0.3	12.54		253	77
233	5.10	0.3	12.59		253	77
234	5.10	0.3	12.48		253	77
235	5.00	0.3	12.4		253	77
236	5.00	0.3	12.37		253	77
237	4.90	0.3	12.33		253	77
238	4.90	0.3	12.37		252	77
239	4.80	0.3	12.36		252	77
240	4.80	0.3	12.34		251	77
241	4.70	0.3	12.35		251	77
242	4.70	0.3	12.38		251	77
243	4.60	0.3	12.44		251	77
244	4.60	0.31	12.65		250	77
245	4.50	0.34	12.74		250	77
246	4.50	0.34	12.8		250	78
247	4.40	0.35	12.72		250	78
248	4.40	0.36	12.84		250	78
249	4.30	0.37	12.91		250	78
250	4.30	0.4	12.76		249	77
251	4.30	0.35	12.56		249	78
252	4.20	0.38	12.49		248	78

253	4.20	0.37	12.43		248	78
254	4.10	0.37	12.21		247	78
255	4.10	0.35	12.22		247	78
256	4.00	0.34	12.12		246	78
257	4.00	0.33	12.06		246	78
258	4.00	0.32	11.93		244	78
259	3.90	0.32	11.92		244	78
260	3.90	0.31	11.87		244	78
261	3.80	0.32	11.79		243	78
262	3.80	0.31	11.83		242	78
263	3.80	0.31	11.73		241	78
264	3.70	0.32	11.83		240	78
265	3.70	0.31	11.66		240	78
266	3.70	0.3	11.48		239	78
267	3.60	0.3	11.48		238	78
268	3.60	0.29	11.22		237	78
269	3.60	0.28	11.07		236	78
270	3.50	0.28	10.83		235	78
271	3.50	0.28	10.64		234	78
272	3.50	0.28	10.57		233	78
273	3.50	0.27	10.23		231	78
274	3.40	0.26	10.06		230	78
275	3.40	0.26	9.86		229	78
276	3.40	0.26	9.86		227	78
277	3.40	0.26	9.67		225	78
278	3.30	0.25	9.65		223	78
279	3.30	0.25	9.48		222	78
280	3.30	0.25	9.43		220	78
281	3.30	0.25	9.27		219	78
282	3.30	0.25	9.32		218	78
283	3.30	0.25	9.22		217	78
284	3.20	0.24	9.19		215	78
285	3.20	0.24	9.13		214	78
286	3.20	0.24	9.14		213	78
287	3.20	0.24	9.07		212	78
288	3.20	0.25	9.1		210	78
289	3.20	0.24	9.03		210	78
290	3.10	0.24	9.07		208	78
291	3.10	0.25	9.06		208	78

292	3.10	0.24	9.09		206	78
293	3.10	0.25	9.01		206	78
294	3.10	0.24	9.03		205	78
295	3.10	0.24	8.99		204	78
296	3.00	0.24	8.96		203	78
297	3.00	0.25	9		202	78
298	3.00	0.24	8.91		202	78
299	3.00	0.24	8.91		201	78
300	3.00	0.24	8.87		201	78
301	3.00	0.24	8.81		200	78
302	3.00	0.24	8.86		200	78
303	2.90	0.24	8.73		199	78
304	2.90	0.24	8.78		198	78
305	2.90	0.24	8.73		197	78
306	2.90	0.24	8.76		198	78
307	2.90	0.24	8.81		197	78
308	2.90	0.25	8.91		197	78
309	2.90	0.25	8.89		196	78
310	2.90	0.25	8.92		196	78
311	2.80	0.25	8.84		195	78
312	2.80	0.25	8.87		195	78
313	2.80	0.25	8.8		195	78
314	2.80	0.25	8.81		194	78
315	2.80	0.24	8.69		194	78
316	2.80	0.24	8.78		193	78
317	2.80	0.24	8.73		193	78
318	2.70	0.25	8.71		192	78
319	2.70	0.24	8.59		192	78
320	2.70	0.24	8.63		192	78
321	2.70	0.25	8.68		191	78
322	2.70	0.24	8.64		191	78
323	2.70	0.24	8.54		190	78
324	2.70	0.24	8.59		190	78
325	2.70	0.24	8.62		190	78
326	2.60	0.24	8.52		190	78
327	2.60	0.24	8.59		190	78
328	2.60	0.24	8.5		189	78
329	2.60	0.24	8.58		190	78
330	2.60	0.25	8.57		189	78

331	2.60	0.24	8.67		189	78
332	2.60	0.24	8.78		189	78
333	2.50	0.25	8.72		188	78
334	2.50	0.25	8.74		188	78
335	2.50	0.25	8.72		188	78
336	2.50	0.24	8.75		188	78
337	2.50	0.25	8.76		188	78
338	2.50	0.24	8.73		188	78
339	2.50	0.24	8.72		187	78
340	2.50	0.24	8.72		187	78
341	2.40	0.24	8.67		187	78
342	2.40	0.24	8.65		188	78
343	2.40	0.24	8.54		187	78
344	2.40	0.24	8.46		188	78
345	2.40	0.23	8.48		187	78
346	2.40	0.23	8.46		187	78
347	2.40	0.23	8.36		186	78
348	2.40	0.23	8.37		186	78
349	2.40	0.23	8.35		186	78
350	2.30	0.23	8.35		186	78
351	2.30	0.23	8.3		186	78
352	2.30	0.23	8.27		185	78
353	2.30	0.23	8.24		185	78
354	2.30	0.23	8.35		185	78
355	2.30	0.23	8.24		185	78
356	2.30	0.23	8.3		185	78
357	2.30	0.23	8.26		185	78
358	2.30	0.23	8.28		185	78
359	2.20	0.22	7.95		185	78
360	2.20	0.22	7.93		185	78
361	2.20	0.22	7.93		184	78
362	2.20	0.22	7.91		184	78
363	2.20	0.22	7.83		183	78
364	2.20	0.22	7.76		183	78
365	2.20	0.22	7.71		183	78
366	2.20	0.22	7.61		183	78
367	2.20	0.22	7.56		182	78
368	2.10	0.21	7.48		182	78
369	2.10	0.22	7.48		181	78

370	2.10	0.21	7.39		181	78
371	2.10	0.22	7.43		181	78
372	2.10	0.22	7.4		180	78
373	2.10	0.21	7.41		180	78
374	2.10	0.22	7.45		180	78
375	2.10	0.21	7.22		180	78
376	2.10	0.22	7.65		180	78
377	2.10	0.23	7.8		180	78
378	2.10	0.23	7.93		180	78
379	2.00	0.23	7.85		179	78
380	2.00	0.23	7.9		179	78
381	2.00	0.23	7.94		179	78
382	2.00	0.23	7.97		179	78
383	2.00	0.23	8.01		179	78
384	2.00	0.23	7.97		179	78
385	2.00	0.23	8.05		178	78
386	2.00	0.23	8.07		178	78
387	2.00	0.23	8.02		178	78
388	1.90	0.23	8.05		178	78
389	1.90	0.23	8.07		178	78
390	1.90	0.23	8.09		178	78
391	1.90	0.23	8.07		177	78
392	1.90	0.23	8.1		178	78
393	1.90	0.23	8.07		178	78
394	1.90	0.23	8.15		178	78
395	1.90	0.23	8.17		178	78
396	1.80	0.23	8.26		178	78
397	1.80	0.23	8.2		178	78
398	1.80	0.23	8.19		178	78
399	1.80	0.23	8.3		179	78
400	1.80	0.23	8.33		178	78
401	1.80	0.23	8.28		179	78
402	1.80	0.23	8.32		178	78
403	1.80	0.23	8.34		178	78
404	1.80	0.23	8.34		178	78
405	1.70	0.23	8.36		178	78
406	1.70	0.23	8.37		178	78
407	1.70	0.24	8.46		178	78
408	1.70	0.24	8.39		179	78

409	1.70	0.24	8.43		178	78
410	1.70	0.24	8.36		178	78
411	1.70	0.23	8.34		178	78
412	1.70	0.23	8.3		178	78
413	1.70	0.23	8.3		179	78
414	1.60	0.23	8.28		178	78
415	1.60	0.23	8.2		178	78
416	1.60	0.23	8.24		178	78
417	1.60	0.23	8.17		178	78
418	1.60	0.23	8.22		178	78
419	1.60	0.23	8.13		178	78
420	1.60	0.23	8.16		178	78
421	1.60	0.23	8.22		178	78
422	1.50	0.22	8.1		178	78
423	1.50	0.22	7.99		178	78
424	1.50	0.22	8.03		178	78
425	1.50	0.22	7.91		178	78
426	1.50	0.22	7.87		178	78
427	1.50	0.22	7.84		178	78
428	1.50	0.22	7.82		177	78
429	1.50	0.22	7.78		177	78
430	1.50	0.22	7.71		177	78
431	1.50	0.22	7.72		177	78
432	1.40	0.22	7.66		177	78
433	1.40	0.22	7.61		177	78
434	1.40	0.21	7.67		177	78
435	1.40	0.22	7.9		177	78
436	1.40	0.22	7.94		177	78
437	1.40	0.22	7.95		177	78
438	1.40	0.22	7.93		177	78
439	1.40	0.22	7.99		176	78
440	1.30	0.22	7.95		176	78
441	1.30	0.22	8.03		176	78
442	1.30	0.22	8.07		176	78
443	1.30	0.22	8.08		177	78
444	1.30	0.22	8.16		176	78
445	1.30	0.22	8.16		176	78
446	1.30	0.21	8.22		176	78
447	1.30	0.2	8.28		176	78

448	1.20	0.19	8.63		176	78
449	1.20	0.19	8.78		175	78
450	1.20	0.18	8.88		175	78
451	1.20	0.18	9.02		175	78
452	1.20	0.18	9.07		175	78
453	1.20	0.19	9.06		175	78
454	1.20	0.19	8.95		175	78
455	1.10	0.19	9.09		175	78
456	1.10	0.19	9.01		174	78
457	1.10	0.19	9.02		175	78
458	1.10	0.19	8.97		175	78
459	1.10	0.19	8.79		175	78
460	1.10	0.19	8.87		175	78
461	1.10	0.2	8.76		175	78
462	1.00	0.19	8.58		175	78
463	1.00	0.2	8.49		175	78
464	1.00	0.2	8.32		175	78
465	1.00	0.2	8.33		175	78
466	1.00	0.2	8.18		175	78
467	1.00	0.19	8.13		174	78
468	1.00	0.2	7.96		174	78
469	1.00	0.19	7.97		174	78
470	0.90	0.19	7.91		174	78
471	0.90	0.2	7.9		174	78
472	0.90	0.2	7.87		174	78
473	0.90	0.2	7.8		174	78
474	0.90	0.2	7.72		174	78
475	0.90	0.2	7.72		173	78
476	0.90	0.2	7.69		173	78
477	0.90	0.21	7.63		172	78
478	0.90	0.2	7.6		172	78
479	0.90	0.2	7.52		172	78
480	0.80	0.19	7.26		172	78
481	0.80	0.18	7.25		172	78
482	0.80	0.18	7.32		172	78
483	0.80	0.18	7.3		171	78
484	0.80	0.18	7.24		171	78
485	0.80	0.18	7.19		171	78
486	0.80	0.18	7.22		171	78

487	0.80	0.18	7.2		171	78
488	0.80	0.18	7.19		171	78
489	0.70	0.18	7.19		171	78
490	0.70	0.18	7.18		170	78
491	0.70	0.18	7.08		171	78
492	0.70	0.18	7.13		170	78
493	0.70	0.18	7.1		169	78
494	0.70	0.18	7.19		169	78
495	0.70	0.18	7.11		168	78
496	0.70	0.18	7.08		168	78
497	0.70	0.18	7.11		167	78
498	0.70	0.17	6.96		168	78
499	0.70	0.17	7		167	78
500	0.60	0.17	7		167	78
501	0.60	0.17	7		167	78
502	0.60	0.17	6.87		168	78
503	0.60	0.17	6.88		167	78
504	0.60	0.17	6.87		168	78
505	0.60	0.17	6.82		168	78
506	0.60	0.17	6.87		167	78
507	0.60	0.17	6.83		166	78
508	0.60	0.17	6.78		166	78
509	0.60	0.16	6.72		166	78
510	0.60	0.17	6.69		166	78
511	0.50	0.17	6.74		166	78
512	0.50	0.17	6.7		165	78
513	0.50	0.17	6.74		165	78
514	0.50	0.17	6.84		165	78
515	0.50	0.17	6.93		165	78
516	0.50	0.17	6.85		165	78
517	0.50	0.17	6.89		164	78
518	0.50	0.17	7.46		165	78
519	0.50	0.16	7.87		164	78
520	0.40	0.15	7.95		165	78
521	0.40	0.15	7.72		165	78
522	0.40	0.15	7.58		164	78
523	0.40	0.15	7.43		164	78
524	0.40	0.15	7.46		164	78
525	0.40	0.16	7.47		163	78

526	0.40	0.17	7.34		163	78
527	0.40	0.17	7.27		164	78
528	0.40	0.18	7.27		164	78
529	0.40	0.18	7.15		164	78
530	0.40	0.17	7.13		164	78
531	0.30	0.18	7.13		164	78
532	0.30	0.18	7.1		164	78
533	0.30	0.17	6.95		164	78
534	0.30	0.18	6.98		164	78
535	0.30	0.17	6.9		164	78
536	0.30	0.17	6.92		164	78
537	0.30	0.17	6.87		164	78
538	0.30	0.17	6.79		164	78
539	0.30	0.17	6.8		164	78
540	0.30	0.17	6.8		164	78
541	0.20	0.17	6.81		164	78
542	0.20	0.17	6.67		164	78
543	0.20	0.17	6.62		164	78
544	0.20	0.17	6.63		163	78
545	0.20	0.16	6.51		164	78
546	0.20	0.16	6.47		163	78
547	0.20	0.16	6.51		163	78
548	0.20	0.16	6.5		162	78
549	0.20	0.16	6.45		162	78
550	0.20	0.16	6.49		162	78
551	0.20	0.16	6.48		162	78
552	0.20	0.16	6.47		162	78
553	0.10	0.16	6.46		162	78
554	0.10	0.16	6.47		162	78
555	0.10	0.16	6.53		162	77
556	0.10	0.16	6.58		162	78
557	0.10	0.17	6.87		162	78
558	0.10	0.18	7.3		162	78
559	0.10	0.19	7.36		162	77
560	0.10	0.19	7.37		162	77
561	0.10	0.19	7.39		162	77
562	0.10	0.19	7.43		163	77
563	0.00	0.19	7.35		163	77

OMNI-Test Laboratories, Inc.

Manufacturer:	Kuma Stoves
Model:	K-251
Date:	05/11/23
Run:	7
Control #:	2464
Test Duration:	563
Output Category:	I

Technicians: _____

_____

_____

Test Results in Accordance with CSA B415.1-10

	HHV Basis	LHV Basis
Overall Efficiency	81.9%	88.5%
Combustion Efficiency	98.2%	98.2%
Heat Transfer Efficiency	83%	90.1%

Output Rate (kJ/h)	11,704	11,102	**(Btu/h)**
Burn Rate (kg/h)	0.72	1.59	**(lb/h)**
Input (kJ/h)	14,291	13,557	**(Btu/h)**

Test Load Weight (dry kg)	6.77	14.92	**dry lb**
MC wet (%)	16.65		
MC dry (%)	19.98		
Particulate (g)	14.65		
CO (g)	191		
Test Duration (h)	9.38		

Emissions	**Particulate**	**CO**
g/MJ Output	0.13	1.74
g/kg Dry Fuel	2.16	28.23
g/h	1.56	20.37
lb/MM Btu Output	0.31	4.04

Air/Fuel Ratio (A/F)	11.91

VERSION: **2.4** **4/15/2010**

OMNI-Test Laboratories, Inc.

ASTM E2780 Wood Heater Run Sheets

Client: Kuma Project Number: 0123WM014E Run Number: 7
Model: K-251 Tracking Number: 2464 Date: 05/11/2023
Test Crew: Tony Tong
OMNI Equipment ID numbers: 0063, 00709, 00283 A

ASTM E2515 Lab Sheet

Assembled By: Tony Tong

Date/Time in Dessicator: 5-11-23 21:58

	Weighing #1	Weighing #2	Weighing #3	Weighing #4	Weighing #5
Date/Time:	5-15-23	05/16/23 17:00	05/18/23 7:30	05/22/23 8:00	
R/H %:	18.4	17.8	22.3	12.7	
Temp:	74.6 °F	76.2	76.1	72.3	
200 mg Audit:		200.0	200.1	200.1	
2 g Audit:	0.20003	2000.2 mg	2000.4	2000.4	
100 g Audit:	0.99998	99998.0 mg	99997.8	99997.9	
Initials:	K	TT	TT	TT	

Train	Element	ID #	Tare (mg)	Weight (mg)	Weight (mg)	Weight (mg)	Weight (mg)	Weight (mg)
A (First Hour)	Front Filter	E918	117.1	117.7	117.7			
	Rear Filter	E919	117.8	117.5	117.5			
	Probe	6	115345.7	115345.9	115346.3	115346.2		
	O-Ring Set	~~5503~~ ~~5487~~	4101.2 ~~4123.0~~	4102.6	4103.2	4101.8	4101.6	
A (Remainder)	Front Filter	E920	117.1	122.4	122.3			
	Rear Filter	E949	119.0	119.6	119.5			
	Probe	20	114254.4 ~~114254.4~~	114254.9	114254.7			
	O-Ring Set	5488	3345.4	3347.5	3348.6	3346.3	3346.1	
B	Front Filter	E950	116.8	123.9	123.9			
	Rear Filter	E951	117.0	117.8	117.7			
	Probe	69	117371.9	117372.4	117372.4			
	O-Ring Set	5502	3418.6	3419.9	3420.7	3418.9	3418.7	
BG	Filter	E952	118.5	118.4	118.5			

Technician Signature: Tony Tong Date: 05/23/2023

OMNI-Test Laboratories, Inc.

ASTM E2780 Wood Heater Run Sheets

Client: Kuma Project Number: 0123WM014E Run Number: 7
Model: K-251 Tracking Number: 2464 Date: 05/11/2023
Test Crew: ~~Tony Tony~~, Riley Tiegs
OMNI Equipment ID numbers: 00335, 00336, 00594, 00185, 00322

Wood Heater Run Notes

Air Control Settings

Primary:

Push air control all the way to the ~~stop~~

Secondary: Fixed

Tertiary/Pilot: N/A

Fan: ~~Fan off for~~ first 30 min, ~~then set to~~ low.

Preburn Notes

Time	Notes
10:35	Recording preburn @ ~~8.5~~ 8.3 lbs with low ~~air~~ burn setting

Test Notes

Sketch test fuel configuration:

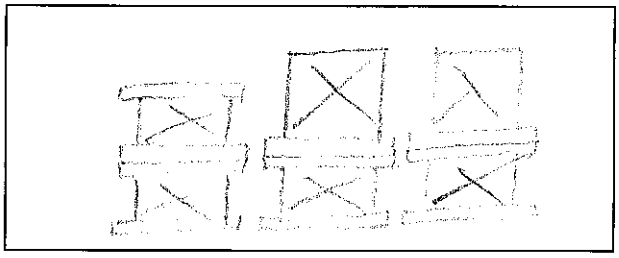

Start up procedures & Timeline:

Bypass: Open for Loading
Fuel loaded by: 55 sec
Door closed at: 65 sec
Primary air: Fully open, 2 min, 30s.

Notes:

	Time	Notes
12:06	Ø	test Start, fan off
	55s	Loaded
	65s	Door Closed
	30 m	FAN ON (LOW)
13:06		First hour filters change.

Technician Signature: Tony Tony Date: 05/11/23

OMNI-Test Laboratories, Inc.

ASTM E2780 Wood Heater Run Sheets

Client: Kuma Project Number: 0123WM014E Run Number: 7
Model: K-251 Tracking Number: 2464 Date: 05/11/2023
Test Crew: Tony Tong Riley Tiegs
OMNI Equipment ID numbers: 00594, 00410, 00716, 00721, 00255

Wood Heater Supplemental Data

Start Time: 12:06 Booth #: E1

Stop Time:

Stack Gas Leak Check:

Initial: good Final: good

Sample Train Leak Check:

A: 0.001 @ 13.9 "Hg
B: 0.000 @ 8.5 "Hg
Ambient Ø @ 13.6" Hg

Calibrations: Span Gas CO_2: 16.84% CO: 4.38% CO: 500 ppm

	Pre Test		Post Test	
	Zero	Span	Zero	Span
Time	10:40	10:42		21:45
CO_2 %	0.00	16.84	-0.002 ~~16.74~~ IK	16.74
CO %	0.00	4.40	0.00 4.345	4.345
CO ppm	0.0	494	-7	484

Air Velocity (ft/min): Initial: <50 Final: <50
Scale Audit (lbs): Initial: 10 Final: 10.0
Pitot Tube Leak Test: Initial: good Final: good
Stack Diameter (in): 6
Induced Draft: 0.000
% Smoke Capture: 100
Flue Pipe Cleaned Prior to First Test in Series:
Date: 04/04/23 Initials: TT

	Initial	Middle	Ending
P_b (in/Hg)	30.13	30.05	30.05
RH (%)	43	40	35
Ambient (°F)	75	78	77

Tunnel Traverse

Microtector Reading	dP (in H_2O)	T(°F)
1	.134	83
2	.160	83
3	.156	83
4	.110	83
5	IK ~~.138~~ .138	83
6	~~.144~~ .154	83
7	.174	83
8	.124	83
Center:		
	.174	83

Background Filter Volume: 95.509

Tunnel Static Pressure (in H_2O):	
Beginning of Test	End of Test
-0.50	-0.48

Technician Signature: Tony Tong Date: 05/11/23

OMNI-Test Laboratories, Inc.

ASTM E2780 Wood Heater Run Sheets

Client: Kuma Project Number: 0123WM014E Run Number: 7
Model: K-251 Tracking Number: 2464 Date: 05/11/2023
Test Crew: Tony Tong
OMNI Equipment ID numbers: 00340, 00431, T61, 00353

Wood Heater Fuel Data

Fuel: Douglas fir, untreated and air dried, standard grade or better dimensional lumber

Pre-Burn Fuel

Calibration: Cal Value (1) = 12% Actual Reading 12.9
Cal Value (2) = 22% Actual Reading 22.9

Piece:	Length:	Reading:	Piece:	Length:	Reading:
1	12 in	23.8	7	12 in	23.3
2	12 in	22.7	8	12 in	22.2
3	12 in	22.1	9	in	
4	12 in	22.8	10	in	
5	12 in	23.2	11	in	
6	12 in	22.4	12	in	

Total Pre-Burn Fuel Weight: 10.1 Pre-Burn Fuel Average Moisture:

Time (clock): 9:00 Room Temperature (F): 75 Initials: TT

Test Fuel

Firebox Volume (ft³): 2.56
Load Weight Range (lb): (16.13, 19.71)
Test Fuel Piece Length (in): 17.25"
Total Wet Fuel Load Weight (lb): ~~18.0 lbs~~ (3.6, 4.5)

17.9 lb.

Fuel Type & Amount: 2 x 4: 4 4 x 4: 2
Weight (with spacers): 8.3 lbs Weight (with spacers): 9.7 lbs

14.92 Dry
6.77 Kg dry

6150

Piece:	Weight (lbs):	Moisture Readings (%DB):				Fuel Type:
1	1.8	24.2	22.5	19.3		2x4
2	1.7	21.7	23.8	21.5		2x4
3	1.7	23.1	22.1	23.5		2x4
4	1.5	20.4	22.3	20.5		2x4
5	4.5	20.1	21.6	19.8		4x4
6	4.7	22.7	19.8	19.5		4x4
7						

Spacer Moisture Readings (%DB)

12.5	10.0	11.0	11.1	10.2	11.5	10.6	11.1
10.9	12.4	11.4	10.7	10.6	11.1	11.1	11.0
10.9	11.2	8.5	11.3				

Time (clock): 9:20 Room Temperature (F): 75 Initials: TT

Technician Signature: Tony Tong Date: 05/11/23

Run 8

Medium Low Burn (Category II)

Wood Heater Preburn Data - ASTM E2780

Run:	8

Technician Signatu

Manufacturer:	Kuma Stoves
Model:	K-251
Tracking No.:	2464
Project No.:	0123WM014E
Test Date:	5/16/23
Beginning Clock Time:	10:46

Preburn Fuel Data

4 pieces @ 12 inches
3 pieces @ 16 inches
_____ pieces @ _____ inches

Fuel Moisture Readings (% DB):

20.0	19.3	22.5	21.9	19.7	19.5	20.0

Avg Preburn Moisture (% DB): **20.41**

Coal Bed Range (lb):	3.4 (min)	4.2 (max)

			Temperatures (°F)								
Elapsed Time (min)	Scale (lb)	Stack Draft (in H_2O)	FB Top	FB Bottom	FB Back	FB Left	FB Right	Cat Exit	Avg. FB	Stack	Ambient
0	7.9	-0.068	767	379	437	497	459	3218	507.8	486	81
1	7.8	-0.067	770	381	437	497	461	3218	509.1	436	81
2	7.7	-0.064	770	382	437	497	462	3218	509.5	413	81
3	7.6	-0.062	765	382	437	497	463	3218	508.9	396	81
4	7.5	-0.062	759	383	437	496	464	3218	507.8	386	81
5	7.4	-0.06	753	383	437	495	464	3218	506.4	378	81
6	7.3	-0.06	746	383	437	494	465	3218	504.8	371	81
7	7.2	-0.059	739	383	436	493	465	3218	503.3	368	81
8	7.1	-0.059	732	383	436	492	465	3218	501.7	364	81
9	7	-0.059	726	382	436	492	464	3218	500.2	361	81
10	6.9	-0.059	723	382	436	491	464	3218	499.1	361	82
11	6.8	-0.059	721	382	436	491	464	3218	498.7	360	82
12	6.7	-0.058	721	381	435	490	464	3218	498.5	360	81
13	6.6	-0.059	722	380	436	490	464	3218	498.3	359	81
14	6.5	-0.059	722	379	436	490	464	3218	498.1	361	81
15	6.4	-0.059	724	379	436	489	465	3218	498.5	360	81
16	6.2	-0.059	726	378	436	489	465	3218	498.8	359	82
17	6.1	-0.058	730	377	436	489	465	3218	499.3	359	82
18	6	-0.057	733	376	436	488	465	3218	499.7	358	82
19	5.9	-0.057	737	376	437	488	465	3218	500.3	359	82
20	5.8	-0.058	740	375	437	488	465	3218	500.8	357	81
21	5.7	-0.062	744	374	437	487	465	3218	501.3	360	81
22	5.6	-0.059	747	373	437	487	465	3218	501.8	359	82
23	5.5	-0.058	749	372	438	487	465	3218	502.1	359	82
24	5.4	-0.057	752	371	438	487	465	3218	502.5	357	81
25	5.3	-0.058	754	370	439	487	465	3218	502.8	357	81
26	5.2	-0.057	754	369	439	487	465	3218	502.8	355	82
27	5.2	-0.057	753	368	440	486	465	3218	502.5	360	82
28	5.1	-0.057	751	367	440	486	466	3218	502	366	82
29	5.1	-0.057	749	366	441	487	466	3218	501.5	368	82
30	5	-0.056	745	365	441	487	466	3218	500.6	367	82
31	5	-0.056	740	364	442	487	466	3218	499.6	364	82
32	4.8	-0.055	734	364	442	487	466	3218	498.6	362	82
33	4.8	-0.055	728	363	443	487	466	3218	497.5	360	81
34	4.7	-0.054	723	362	443	486	467	3218	496.2	357	81
35	4.7	-0.054	717	362	444	486	467	3218	495	357	81
36	4.6	-0.054	713	361	444	486	467	3218	494.1	353	81
37	4.5	-0.053	708	360	444	486	467	3218	493.2	349	81
38	4.5	-0.054	704	360	444	486	467	3218	492.2	347	81
39	4.4	-0.053	699	359	445	485	467	3218	491.1	345	81
40	4.3	-0.053	694	359	445	485	468	3218	490	343	81
41	4.3	-0.053	689	358	445	484	468	3218	488.7	339	81
42	4.2	-0.052	683	358	445	484	468	3218	487.4	337	81

Wood Heater Preburn Data - ASTM E2780

Run: 8

Technician Signatu

Manufacturer: Kuma Stoves
Model: K-251
Tracking No.: 2464
Project No.: 0123WM014E
Test Date: 5/16/23
Beginning Clock Time: 10:46

Preburn Fuel Data

4 pieces @ 12 inches
3 pieces @ 16 inches
pieces @ inches

Fuel Moisture Readings (% DB):

20.0	19.3	22.5	21.9	19.7	19.5	20.0

Avg Preburn Moisture (% DB): **20.41**

Coal Bed Range (lb):	3.4 (min)	4.2 (max)

			Temperatures (°F)								
Elapsed Time (min)	Scale (lb)	Stack Draft (in H_2O)	FB Top	FB Bottom	FB Back	FB Left	FB Right	Cat Exit	Avg. FB	Stack	Ambient
43	4.2	-0.051	677	357	445	483	468	3218	485.9	336	81
44	4.1	-0.05	670	356	445	482	468	3218	484.3	332	81
45	4.1	-0.049	663	356	445	482	468	3218	482.6	329	81
46	4.1	-0.05	656	355	445	481	467	3218	480.9	326	81
47	4	-0.049	650	355	444	479	467	3218	479.1	324	81
48	4	-0.049	643	354	444	478	467	3218	477.4	321	81
49	4	-0.049	636	354	444	477	467	3218	475.5	319	81
50	3.9	-0.049	629	354	443	476	466	3218	473.6	317	81
51	3.9	-0.048	622	354	443	475	466	3218	471.8	315	81
52	3.9	-0.048	615	354	443	474	465	3218	469.9	313	81
53	3.8	-0.047	608	354	442	472	464	3218	468.1	310	81
54	3.8	-0.047	602	354	442	471	464	3218	466.5	307	81
55	3.8	-0.046	595	354	442	470	463	3218	464.8	305	81
56	3.8	-0.047	588	355	442	468	463	3218	463.2	303	81
57	3.9	-0.046	582	355	441	467	462	3218	461.5	300	81
58	3.8	-0.046	576	356	441	466	462	3218	460	298	81
59	3.8	-0.045	570	356	441	464	461	3218	458.4	295	81
60	3.8	-0.045	564	357	440	463	460	3218	457	293	81
61	3.7	-0.044	559	358	440	461	460	3218	455.5	292	81
62	3.7	-0.045	554	358	439	460	459	3218	454.1	290	81
63	3.7	-0.044	549	359	439	458	458	3218	452.6	288	81
64	3.7	-0.043	545	359	438	456	457	3218	451.1	287	81
65	3.7	-0.044	540	360	438	455	456	3218	449.8	286	81
66	3.7	-0.044	537	360	437	453	455	3218	448.5	284	81
67	3.7	-0.044	533	361	437	452	454	3218	447.2	283	81
68	3.6	-0.044	530	361	436	450	453	3218	446.1	282	80
69	3.6	-0.043	526	362	436	448	452	3218	444.9	281	81
70	3.6	-0.044	523	362	435	447	451	3218	443.7	280	80

Wood Heater Test Fuel Data - ASTM E2780

Manufacturer :	Kuma Stoves
Model :	K-251
Tracking No. :	2464
Project No. :	0123WM014E
Test Date :	5/16/2023
Run No. :	8

Moisture Meter Cal	
Cal Block	Measured
12.0	12.0
22.0	22.0

Firebox Volume :	2.56	ft3
% 2 x 4 Required :	35 - 65	%
Ideal Fuel Weight :	17.92	lb.
Minimum Fuel Weight :	16.13	lb.
Maximum Fuel Weight :	19.71	lb.

Fuel Piece Data

PC #	Weight, lb	Size	Length, In	Moisture Readings, Dry Basis %			Average MC, % db	Dry Weight, lb.	Volume, ft3	Wet Weights, lb 4 x 4	Wet Weights, lb 2 x 4	Dry Weights, lb 4 x 4	Dry Weights, lb 2 x 4
1	1.60	2x4	17.25	20.0	20.9	19.8	20.2	1.33	0.0524		1.6		1.33
2	1.60	2x4	17.25	20.3	20.3	22.1	20.9	1.32	0.0524		1.6		1.32
3	1.60	2x4	17.25	20.0	19.4	21.9	20.4	1.33	0.0524		1.6		1.33
4	1.50	2x4	17.25	19.3	19.1	19.8	19.4	1.26	0.0524		1.5		1.26
5	4.20	4x4	17.25	21.0	21.3	24.4	22.2	3.44	0.1223	4.2		3.44	
6	4.20	4x4	17.25	22.8	23.1	20.4	22.1	3.44	0.1223	4.2		3.44	
7													
8													
9													

Spacer Data

Moisture Readings, Dry Basis % (One reading per spacer)								
11.1	10.6	11.3	12.0	12.1	12.5	12.8	11.2	12.8
13.8	11.7	11.1	14.0	12.8	11.6	10.2	8.2	13.8
12.8	7.9							

Avg : 11.7

Assembled Crib Fuel Load with Spacers Attatched

PC #	Weight, lb with Spacers	Size	4 x 4s	2 x 4s
1	2.00	2x4		2.0000
2	2.00	2x4		2.0000
3	2.00	2x4		2.0000
4	1.90	2x4		1.9000
5	4.50	4x4	4.50	
6	4.40	4x4	4.40	
7				
8				
9				

Combined Mass of 4 x 4s	8.9	lb
Combined Mass of 2 x 4s	7.9	lb
Total Wet Mass of Fuel Load	**16.8**	lb

Fuel Load Properties

Type	Number of Pieces	Wet Weight, lb.	Dry Weight, lb.	Fuel Loading Density, lb/ft³ Wet Basis	Fuel Loading Density, lb/ft³ Dry Basis	Dry Fuel Density, lb/ft³	Wet Fuel Density, lb/ft³	Moisture, % Dry Basis	Moisture, % Wet Basis
2 x 4	4	6.3	5.24	6.56	5.47	26.67	32.36	20.05	16.70
4 x 4	2	8.4	6.88						
Spacers	20	2.1	1.88						
Totals		16.8	13.99						

Compliance Checks

	Fuel Load, Wet Lb.	Load Density, lb/ft³ of FB vol	Fuel Density, lb/ft³	% of Fuel load mass which is 2x4	Fuel Load Peices Mositure, % db
Measured	16.8	6.56	26.67	47	20.9
Required	16.1 - 19.7	6.3 - 7.7	25 - 36	35 - 65	19 -25
Complies ?	Yes	Yes	Yes	Yes	Yes

Wood Heater Test Data

u

Run: 8

Manufacturer: Kuma Stoves
Model: K-251
Tracking No.: 2464
Project No.: 0123WM014E
Test Date: 16-May-23
Beginning Clock Time: 11:58

Total Sampling Time: 329 min
Recording Interval: 1 min
Tunnel Diameter: 6
Background Sample Volume: 49.001 cubic feet

PM Control Modules: 335,336
Dilution Tunnel MW(dry): 29.00 lb/lb-mole
Dilution Tunnel MW(wet): 28.78 lb/lb-mole
Dilution Tunnel H2O: 2.00 percent
Dilution Tunnel Static: -0.480 "H2O
Tunnel Area: 0.19635 ft2
Pitot Tube Cp: 0.99

Avg. Tunnel Velocity: 24.60 ft/sec.
Initial Tunnel Flow: 273.0 scfm
Average Tunnel Flow: 270.9 scfm
Post-Test Leak Check (1st Hr): 0.000 cfm @ 11 in. Hg
Post-Test Leak Check (1): 0.000 cfm @ 11 in. Hg
Post-Test Leak Check (2): 0.000 cfm @ 10 in. Hg
Average Test Piece Fuel Moisture: 20.05 Dry Basis %

Technician Signature:_____

Meter Box Y Factor: 1.007 (1) 1.015 (2) 1.012 (Amb)

Export to PDF

Barometric Pressure:

Begin	Middle	End	Average
30.12	30.06	30.01	30.06

Room Air Velocity, fpn
<50

OMNI Equipment Numbers: _____

Velocity Traverse Data

	Pt.1	Pt.2	Pt.3	Pt.4	Pt.5	Pt.6	Pt.7	Pt.8	Center	
Initial dP	0.120	0.148	0.148	0.110	0.110	0.144	0.154	0.138	0.166	"H2O
Temp:	95	95	95	96	96	96	96	96	96	°F

V_{strav} 24.77 ft/sec V_{scent} 27.63 ft/sec F_p 0.896

qwq

	Particulate Sampling Data														Fuel Weight (lb)		Temperature Data (°F)													Stack Gas Data		
Elapsed Time (min)	Gas Meter 1 (ft^3)	Gas Meter 2 (ft^3)	Sample Rate 1 (cfm)	Sample Rate 2 (cfm)	Orifice dH 1 ("H_2O)	Meter 1 Temp (°F)	Meter 1 Vacuum ("Hg)	Orifice dH 2 ("H_2O)	Meter 2 Temp (°F)	Meter 2 Vacuum ("Hg)	Dilution Tunnel (°F)	Dilution Tunnel Center dP	Pro. Rate 1	Pro. Rate 2	Scale Reading	Weight Change	Firebox Top	Firebox Bottom	Firebox Back	Firebox Left	Firebox Right	Avg. Stove Surface (Tot = ΔT)	Catalyst Exit	Stack	Filter 1	Dryer Exit 1	Filter 2	Dryer Exit 2	Ambient	Draft ("H_2O)	CO_2 (%)	CO (%)
Tot / Avg	**52.80**	**52.79**	**0.16**	**0.16**	**1.22**	**90.93**	**2.45**	**0.95**	**90.92**	**1.50**	**95.58**	**0.16**	**99.99**	**99.99**		-16.8	566	332	392	426	406	**54**	878	310	81	71	81	71	82	(0.05)	10.03	0.24
Minimum			0.15	0.15	0.94	82.00	2.07	0.84	83.00	1.50	92.00	0.16	98.42	98.37	0.00	-0.300	439	307	328	376	368	390	687	250	78	67	78	67	80	(0.07)	1.72	0.07
Max			0.16	0.16	1.28	93.00	2.53	0.98	93.00	1.60	131.00	0.17	102.45	101.72	16.80	0.100	767	367	435	489	457	469	1172	411	83	76	81	75	83	(0.04)	15.53	1.88
0	0.000	0.000			0.94	82	2.07	0.84	83	1.5	125	0.160			16.8		517	365	435	446	455	444	781	411	78	72	78	72	80	-0.066	1.93	0.49
1	0.149	0.152	0.15	0.15	1.25	82	2.19	0.94	83	1.5	131	0.160	98	100	16.7	-0.1	506	367	435	445	457	442	754	383	80	70	79	69	80	-0.054	1.72	0.4
2	0.311	0.311	0.16	0.16	1.28	82	2.2	0.98	83	1.5	102	0.166	102	100	16.4	-0.3	494	367	434	443	456	439	709	314	80	69	79	68	80	-0.049	4.41	0.97
3	0.472	0.472	0.16	0.16	1.26	82	2.19	0.97	83	1.5	97	0.166	101	101	16.3	-0.1	490	367	433	440	454	437	687	303	80	69	79	68	80	-0.051	5.83	0.2
4	0.633	0.632	0.16	0.16	1.26	83	2.18	0.97	83	1.5	95	0.166	101	100	16.3	0	489	367	430	437	452	435	687	303	80	69	79	68	80	-0.051	6.11	0.1
5	0.793	0.791	0.16	0.16	1.26	83	2.18	0.97	83	1.5	94	0.166	100	100	16.3	0	490	367	427	433	448	433	691	306	80	69	79	67	80	-0.052	6.56	0.09
6	0.953	0.952	0.16	0.16	1.25	83	2.18	0.97	83	1.5	93	0.166	100	101	16.2	-0.1	491	367	423	429	445	431	694	309	80	69	79	67	80	-0.052	7.44	0.07
7	1.113	1.111	0.16	0.16	1.26	83	2.18	0.96	83	1.5	93	0.163	101	100	16.2	0	493	367	419	425	441	429	700	314	80	69	79	67	80	-0.053	8.17	0.07
8	1.274	1.270	0.16	0.16	1.25	83	2.18	0.96	83	1.5	93	0.163	102	100	16.2	0	499	367	414	421	437	428	710	318	80	69	79	67	80	-0.053	8.57	0.08
9	1.434	1.431	0.16	0.16	1.25	83	2.18	0.96	83	1.5	94	0.165	101	101	16.2	0	507	366	410	417	433	427	727	322	80	69	80	67	80	-0.054	8.47	0.09
10	1.594	1.589	0.16	0.16	1.25	83	2.18	0.96	83	1.5	93	0.165	100	99	16.1	-0.1	515	366	405	413	428	425	744	326	80	69	80	67	80	-0.054	7.69	0.1
11	1.754	1.749	0.16	0.16	1.25	83	2.17	0.96	83	1.5	93	0.165	100	101	16.1	0	521	366	400	409	424	424	757	328	80	69	80	67	80	-0.054	8.02	0.1
12	1.914	1.909	0.16	0.16	1.25	83	2.18	0.96	83	1.5	93	0.166	100	100	16.0	-0.1	526	365	396	405	420	422	765	331	80	69	80	67	80	-0.054	8.01	0.1
13	2.074	2.068	0.16	0.16	1.24	83	2.17	0.96	83	1.5	93	0.164	101	100	15.9	-0.1	531	365	391	402	415	421	778	334	80	69	80	67	80	-0.055	9.46	0.1
14	2.233	2.227	0.16	0.16	1.24	83	2.17	0.96	84	1.5	92	0.166	99	99	15.8	-0.1	538	364	387	400	411	420	794	339	80	69	80	67	80	-0.056	9.48	0.11
15	2.393	2.387	0.16	0.16	1.24	83	2.17	0.95	84	1.5	93	0.167	100	100	15.7	-0.1	545	363	382	397	407	419	809	341	80	69	80	67	80	-0.056	9.45	0.12
16	2.553	2.546	0.16	0.16	1.24	84	2.17	0.95	84	1.5	94	0.164	101	100	15.6	-0.1	551	363	378	395	404	418	820	345	80	69	80	67	80	-0.057	9.57	0.12
17	2.713	2.706	0.16	0.16	1.24	84	2.17	0.95	84	1.5	94	0.165	100	100	15.5	-0.1	557	361	374	393	400	417	832	349	81	69	80	67	80	-0.058	10.81	0.11
18	2.873	2.865	0.16	0.16	1.23	84	2.16	0.96	84	1.5	94	0.167	100	99	15.4	-0.1	564	360	370	391	397	416	850	354	81	70	80	67	80	-0.058	11.9	0.12
19	3.032	3.024	0.16	0.16	1.24	84	2.17	0.95	84	1.5	94	0.166	99	99	15.3	-0.1	572	359	367	389	393	416	869	357	81	70	80	67	80	-0.058	12.15	0.12
20	3.191	3.184	0.16	0.16	1.24	84	2.16	0.95	84	1.5	94	0.165	100	100	15.2	-0.1	582	358	363	387	390	416	890	360	81	70	80	68	80	-0.058	12.1	0.1
21	3.352	3.343	0.16	0.16	1.23	84	2.16	0.95	85	1.5	95	0.167	101	99	15.1	-0.1	591	357	360	385	388	416	909	365	81	70	80	68	80	-0.060	12.81	0.1
22	3.511	3.502	0.16	0.16	1.23	84	2.16	0.95	85	1.5	95	0.166	100	99	14.9	-0.2	601	356	357	384	385	417	929	369	81	70	80	68	80	-0.060	12.72	0.11
23	3.671	3.662	0.16	0.16	1.23	85	2.17	0.95	85	1.5	95	0.164	101	101	14.8	-0.1	617	355	354	383	383	418	952	372	81	70	80	68	80	-0.060	12.01	0.16
24	3.830	3.821	0.16	0.16	1.24	85	2.17	0.95	85	1.5	96	0.163	100	100	14.7	-0.1	630	354	351	382	381	420	975	376	81	70	80	68	80	-0.060	11.77	0.14
25	3.990	3.980	0.16	0.16	1.24	85	2.16	0.95	85	1.5	96	0.164	101	100	14.6	-0.1	639	353	348	381	379	420	998	379	81	70	80	68	80	-0.061	11.94	0.13
26	4.150	4.140	0.16	0.16	1.23	85	2.17	0.95	85	1.5	96	0.165	100	100	14.5	-0.1	645	352	346	381	377	420	1015	379	81	71	80	68	80	-0.061	12.04	0.11
27	4.309	4.299	0.16	0.16	1.24	85	2.17	0.95	85	1.5	96	0.163	100	100	14.4	-0.1	650	351	343	380	376	420	1022	380	81	71	80	68	80	-0.060	11.86	0.11
28	4.468	4.459	0.16	0.16	1.24	85	2.16	0.95	85	1.5	97	0.164	100	101	14.3	-0.1	654	350	341	380	374	420	1027	381	81	71	80	69	80	-0.060	12.55	0.11
29	4.628	4.619	0.16	0.16	1.23	85	2.17	0.95	86	1.5	97	0.165	100	100	14.1	-0.2	657	349	340	380	373	420	1034	384	81	71	80	69	80	-0.060	13.69	0.11
30	4.788	4.778	0.16	0.16	1.23	85	2.17	0.95	86	1.5	97	0.164	101	100	14.0	-0.1	661	348	338	381	372	420	1042	386	81	71	80	69	80	-0.061	14.34	0.18
31	4.948	4.937	0.16	0.16	1.23	86	2.17	0.95	86	1.5	97	0.163	101	100	13.8	-0.2	669	347	336	381	371	421	1054	391	82	71	80	69	80	-0.062	14.47	0.34
32	5.107	5.097	0.16	0.16	1.23	86	2.17	0.95	86	1.5	97	0.167	99	100	13.7	-0.1	676	347	335	382	370	422	1066	394	82	71	80	69	80	-0.063	14.68	0.66
33	5.266	5.256	0.16	0.16	1.23	86	2.17	0.95	86	1.5	98	0.165	100	100	13.6	-0.1	682	346	333	383	369	423	1078	397	82	72	81	69	80	-0.062	14.94	1.04
34	5.427	5.417	0.16	0.16	1.23	86	2.17	0.95	86	1.5	98	0.165	101	101	13.4	-0.2	688	345	332	385	369	424	1089	398	82	72	81	69	80	-0.063	14.9	1.25
35	5.587	5.576	0.16	0.16	1.23	86	2.17	0.95	86	1.5	98	0.165	100	100	13.3	-0.1	694	344	331	387	368	425	1101	401	82	72	81	69	80	-0.063	14.67	1.71
36	5.746	5.735	0.16	0.16	1.23	86	2.17	0.95	86	1.5	98	0.163	100	100	13.1	-0.2	702	343	330	389	368	426	1113	404	82	72	81	70	80	-0.063	14.66	1.79
37	5.905	5.896	0.16	0.16	1.23	87	2.18	0.95	87	1.5	99	0.163	100	102	13.0	-0.1	708	343	329	391	368	428	1122	406	82	72	81	70	80	-0.063	14.44	1.88
38	6.066	6.055	0.16	0.16	1.23	87	2.17	0.95	87	1.5	99	0.165	101	100	12.8	-0.2	712	342	329	393	368	429	1126	406	82	72	81	70	80	-0.062	14.47	1.85
39	6.226	6.214	0.16	0.16	1.23	87	2.18	0.95	87	1.5	99	0.163	101	100	12.7	-0.1	715	341	329	396	368	430	1127	406	82	72	81	70	80	-0.064	14.24	1.88
40	6.385	6.375	0.16	0.16	1.23	87	2.17	0.95	87	1.5	98	0.166	99	101	12.5	-0.2	718	340	328	398	369	431	1129	407	82	72	81	70	80	-0.064	14.14	1.76

Wood Heater Test Data

u

Run: 8

Manufacturer: Kuma Stoves
Model: K-251
Tracking No.: 2464
Project No.: 0123WM014E
Test Date: 16-May-23
Beginning Clock Time: 11:58

Total Sampling Time: 329 min
Recording Interval: 1 min
Tunnel Diameter: 6
Background Sample Volume: 49.001 cubic feet

PM Control Modules: 335,336
Dilution Tunnel MW(dry): 29.00 lb/lb-mole
Dilution Tunnel MW(wet): 28.78 lb/lb-mole
Dilution Tunnel H2O: 2.00 percent
Dilution Tunnel Static: -0.480 "H2O
Tunnel Area: 0.19635 ft2
Pitot Tube Cp: 0.99

Avg. Tunnel Velocity: 24.60 ft/sec.
Initial Tunnel Flow: 273.0 scfm
Average Tunnel Flow: 270.9 scfm
Post-Test Leak Check (1st Hr): 0.000 cfm @ 11 in. Hg
Post-Test Leak Check (1): 0.000 cfm @ 11 in. Hg
Post-Test Leak Check (2): 0.000 cfm @ 10 in. Hg
Average Test Piece Fuel Moisture: 20.05 Dry Basis %

Technician Signature:_____

Meter Box Y Factor: 1.007 (1) 1.015 (2) 1.012 (Amb)

Export to PDF

Barometric Pressure:

Begin	Middle	End	Average
30.12	30.06	30.01	30.06

Room Air Velocity, fpn
<50

OMNI Equipment Numbers: _____

Velocity Traverse Data

	Pt.1	Pt.2	Pt.3	Pt.4	Pt.5	Pt.6	Pt.7	Pt.8	Center	
Initial dP	0.120	0.148	0.148	0.110	0.110	0.144	0.154	0.138	0.166	"H2O
Temp:	95	95	95	96	96	96	96	96	96	°F

V_{strav} 24.77 ft/sec V_{scent} 27.63 ft/sec F_p 0.896

qwq

	Particulate Sampling Data														Fuel Weight (lb)		Temperature Data (°F)													Stack Gas Data		
Elapsed Time (min)	Gas Meter 1 (ft^3)	Gas Meter 2 (ft^3)	Sample Rate 1 (cfm)	Sample Rate 2 (cfm)	Orifice dH 1 ("H_2O)	Meter 1 Temp (°F)	Meter 1 Vacuum ("Hg)	Orifice dH 2 ("H_2O)	Meter 2 Temp (°F)	Meter 2 Vacuum ("Hg)	Dilution Tunnel (°F)	Dilution Tunnel Center dP	Pro. Rate 1	Pro. Rate 2	Scale Reading	Weight Change	Firebox Top	Firebox Bottom	Firebox Back	Firebox Left	Firebox Right	Avg. Stove Surface (Tot = ΔT)	Catalyst Exit	Stack	Filter 1	Dryer Exit 1	Filter 2	Dryer Exit 2	Ambient	Draft ("H_2O)	CO_2 (%)	CO (%)
41	6.544	6.534	0.16	0.16	1.23	87	2.17	0.95	87	1.5	99	0.165	100	100	12.3	-0.2	719	340	328	401	369	431	1129	405	82	73	81	70	80	-0.064	14.16	1.58
42	6.704	6.693	0.16	0.16	1.23	87	2.17	0.95	87	1.5	99	0.165	100	100	12.2	-0.1	719	339	328	404	369	432	1126	404	82	73	81	70	80	-0.063	14.16	1.48
43	6.865	6.854	0.16	0.16	1.23	87	2.17	0.95	87	1.5	99	0.165	101	101	12.1	-0.1	720	338	328	407	370	433	1123	403	82	73	81	70	80	-0.062	14.27	1.39
44	7.025	7.013	0.16	0.16	1.23	87	2.17	0.95	87	1.5	99	0.164	101	100	11.9	-0.2	720	338	328	409	370	433	1122	402	82	74	81	71	80	-0.064	14.22	1.32
45	7.184	7.173	0.16	0.16	1.23	87	2.17	0.95	88	1.5	99	0.163	100	101	11.7	-0.2	722	337	329	412	371	434	1122	402	82	74	81	71	80	-0.063	14.33	1.32
46	7.344	7.334	0.16	0.16	1.23	87	2.18	0.95	88	1.5	99	0.164	101	101	11.7	0	725	336	329	415	371	435	1126	404	82	74	81	71	81	-0.063	14.23	1.52
47	7.505	7.493	0.16	0.16	1.24	88	2.17	0.95	88	1.5	99	0.164	101	100	11.5	-0.2	728	336	329	417	372	436	1130	405	83	74	81	71	81	-0.063	14.29	1.58
48	7.665	7.653	0.16	0.16	1.23	88	2.17	0.96	88	1.5	99	0.162	101	101	11.4	-0.1	730	335	330	420	373	438	1133	404	83	74	81	71	81	-0.064	14.5	1.46
49	7.824	7.814	0.16	0.16	1.23	88	2.16	0.95	88	1.5	99	0.163	100	101	11.2	-0.2	732	334	330	423	373	438	1135	404	83	74	81	71	81	-0.063	14.55	1.48
50	7.984	7.973	0.16	0.16	1.23	88	2.16	0.95	88	1.5	99	0.163	101	100	11.1	-0.1	733	334	331	426	374	440	1137	404	83	75	81	72	81	-0.063	14.65	1.25
51	8.144	8.133	0.16	0.16	1.23	88	2.17	0.95	88	1.5	99	0.163	101	101	11.0	-0.1	735	333	332	428	376	441	1140	404	82	75	81	72	81	-0.062	14.68	1.1
52	8.305	8.294	0.16	0.16	1.22	88	2.17	0.95	88	1.5	99	0.164	101	101	10.8	-0.2	738	332	333	430	377	442	1143	403	82	75	81	72	81	-0.062	14.83	1.41
53	8.465	8.453	0.16	0.16	1.23	88	2.17	0.95	88	1.5	99	0.165	100	100	10.7	-0.1	738	332	333	433	378	443	1142	404	82	75	81	72	81	-0.061	14.89	0.98
54	8.625	8.613	0.16	0.16	1.23	88	2.16	0.95	88	1.5	99	0.162	101	101	10.6	-0.1	740	331	334	435	379	444	1138	403	82	75	81	72	81	-0.060	14.93	0.98
55	8.785	8.774	0.16	0.16	1.23	88	2.17	0.95	88	1.5	99	0.164	100	101	10.4	-0.2	741	330	335	437	380	445	1137	403	82	75	81	72	81	-0.062	14.92	0.74
56	8.945	8.934	0.16	0.16	1.24	89	2.17	0.95	89	1.5	99	0.164	100	100	10.3	-0.1	744	329	336	439	381	446	1138	401	82	75	81	72	81	-0.061	14.94	0.51
57	9.106	9.093	0.16	0.16	1.23	89	2.17	0.95	89	1.5	99	0.164	101	100	10.2	-0.1	751	329	337	441	382	448	1146	401	82	75	81	72	81	-0.062	13.11	0.33
58	9.266	9.254	0.16	0.16	1.22	89	2.17	0.96	89	1.5	100	0.164	100	101	10.2	0	755	328	339	442	383	449	1150	401	82	75	81	73	81	-0.062	14.62	0.21
59	9.426	9.414	0.16	0.16	1.23	89	2.16	0.95	89	1.5	100	0.165	100	100	10.0	-0.2	756	328	340	444	385	451	1145	399	82	75	81	73	81	-0.060	14.48	0.16
60	9.586	9.573	0.16	0.16	1.24	89	2.17	0.95	89	1.5	100	0.161	101	101	9.9	-0.1	756	327	341	446	386	451	1140	399	82	75	81	73	81	-0.061	14.4	0.14
61	9.746	9.734	0.16	0.16	1.24	89	2.52	0.95	89	1.5	99	0.164	100	101	9.8	-0.1	755	326	342	447	387	451	1138	398	79	75	81	73	81	-0.060	14.49	0.15
62	9.907	9.894	0.16	0.16	1.24	89	2.53	0.95	89	1.5	100	0.163	101	101	9.6	-0.2	755	326	343	449	387	452	1137	398	79	75	81	73	81	-0.060	14.83	0.27
63	10.068	10.054	0.16	0.16	1.23	89	2.52	0.95	89	1.5	99	0.164	101	100	9.5	-0.1	754	325	344	450	388	452	1135	396	79	75	81	73	82	-0.061	14.82	0.26
64	10.228	10.214	0.16	0.16	1.23	89	2.53	0.95	89	1.5	100	0.163	101	101	9.3	-0.2	751	324	345	451	389	452	1131	396	79	75	81	73	82	-0.061	14.97	0.29
65	10.388	10.375	0.16	0.16	1.23	89	2.53	0.95	89	1.5	100	0.164	100	101	9.2	-0.1	751	324	346	453	390	453	1129	396	79	75	81	73	81	-0.061	14.98	0.28
66	10.548	10.535	0.16	0.16	1.23	89	2.52	0.95	89	1.5	99	0.165	100	100	9.1	-0.1	751	323	348	454	391	453	1130	395	79	75	81	73	81	-0.060	15	0.34
67	10.709	10.695	0.16	0.16	1.23	89	2.53	0.95	89	1.5	99	0.164	101	100	9.0	-0.1	753	323	349	455	392	454	1133	396	80	75	81	74	81	-0.061	15.2	0.24
68	10.869	10.856	0.16	0.16	1.22	90	2.53	0.95	90	1.5	99	0.166	99	100	8.9	-0.1	757	322	350	457	393	456	1138	398	80	75	81	74	82	-0.062	15.35	0.42
69	11.029	11.016	0.16	0.16	1.23	90	2.53	0.95	90	1.5	100	0.164	100	100	8.8	-0.1	760	321	351	458	393	457	1144	398	80	75	81	74	82	-0.060	15.45	0.48
70	11.189	11.176	0.16	0.16	1.23	90	2.52	0.95	90	1.5	99	0.164	100	100	8.7	-0.1	762	321	352	459	395	458	1150	399	80	75	81	74	81	-0.060	15.52	0.74
71	11.350	11.337	0.16	0.16	1.23	90	2.52	0.96	90	1.6	99	0.165	100	100	8.6	-0.1	764	320	353	461	396	459	1156	401	80	75	81	74	81	-0.062	15.53	0.9
72	11.511	11.497	0.16	0.16	1.23	90	2.53	0.95	90	1.5	100	0.164	101	100	8.4	-0.2	765	320	355	462	397	460	1160	400	80	75	81	74	81	-0.061	15.47	0.9
73	11.671	11.657	0.16	0.16	1.23	90	2.52	0.96	90	1.5	100	0.164	100	100	8.3	-0.1	764	319	356	464	398	460	1162	400	80	75	81	74	81	-0.061	15.38	0.77
74	11.831	11.819	0.16	0.16	1.23	90	2.53	0.96	90	1.5	100	0.164	100	101	8.2	-0.1	765	318	357	465	399	461	1165	399	80	76	81	74	82	-0.061	15.33	0.89
75	11.992	11.979	0.16	0.16	1.23	90	2.52	0.95	90	1.5	100	0.162	101	101	8.1	-0.1	765	318	359	467	401	462	1169	399	80	76	81	74	82	-0.061	15.14	0.72
76	12.152	12.139	0.16	0.16	1.23	90	2.53	0.95	90	1.5	100	0.163	100	100	8.0	-0.1	765	317	360	468	402	462	1171	398	80	76	81	74	82	-0.060	15.18	0.74
77	12.313	12.300	0.16	0.16	1.23	90	2.53	0.95	90	1.6	100	0.161	102	102	7.9	-0.1	766	317	362	470	404	464	1172	398	80	76	81	74	82	-0.061	15.24	0.6
78	12.474	12.461	0.16	0.16	1.23	90	2.52	0.95	90	1.5	100	0.165	100	100	7.7	-0.2	767	316	364	471	405	465	1172	397	80	76	81	75	82	-0.060	15.1	0.48
79	12.634	12.621	0.16	0.16	1.23	90	2.53	0.95	90	1.5	100	0.164	100	100	7.6	-0.1	767	316	365	473	406	465	1170	396	80	76	81	75	82	-0.060	15.02	0.37
80	12.794	12.781	0.16	0.16	1.23	90	2.53	0.95	90	1.5	100	0.163	100	100	7.5	-0.1	766	315	367	474	407	466	1168	395	81	76	81	75	82	-0.060	14.86	0.31
81	12.955	12.942	0.16	0.16	1.23	90	2.53	0.95	90	1.5	100	0.162	101	101	7.4	-0.1	765	315	368	475	409	466	1164	394	81	76	81	75	82	-0.060	14.65	0.23
82	13.116	13.102	0.16	0.16	1.23	90	2.53	0.95	90	1.5	100	0.162	101	101	7.3	-0.1	765	314	370	477	410	467	1160	392	81	76	81	75	82	-0.060	14.59	0.2
83	13.277	13.263	0.16	0.16	1.23	90	2.53	0.95	90	1.5	99	0.165	100	100	7.2	-0.1	764	314	372	478	411	468	1156	391	81	76	81	75	82	-0.060	14.62	0.17
84	13.437	13.424	0.16	0.16	1.23	90	2.53	0.95	90	1.5	100	0.163	100	101	7.1	-0.1	763	314	373	479	412	468	1152	391	81	76	81	75	82	-0.060	14.47	0.17

Wood Heater Test Data

u

Run: 8

Manufacturer: Kuma Stoves
Model: K-251
Tracking No.: 2464
Project No.: 0123WM014E
Test Date: 16-May-23
Beginning Clock Time: 11:58

Total Sampling Time: 329 min
Recording Interval: 1 min
Tunnel Diameter: 6
Background Sample Volume: 49.001 cubic feet

PM Control Modules: 335,336
Dilution Tunnel MW(dry): 29.00 lb/lb-mole
Dilution Tunnel MW(wet): 28.78 lb/lb-mole
Dilution Tunnel H2O: 2.00 percent
Dilution Tunnel Static: -0.480 "H2O
Tunnel Area: 0.19635 ft2
Pitot Tube Cp: 0.99

Avg. Tunnel Velocity: 24.60 ft/sec.
Initial Tunnel Flow: 273.0 scfm
Average Tunnel Flow: 270.9 scfm
Post-Test Leak Check (1st Hr): 0.000 cfm @ 11 in. Hg
Post-Test Leak Check (1): 0.000 cfm @ 11 in. Hg
Post-Test Leak Check (2): 0.000 cfm @ 10 in. Hg
Average Test Piece Fuel Moisture: 20.05 Dry Basis %

Technician Signature:_____

Meter Box Y Factor: 1.007 (1) 1.015 (2) 1.012 (Amb)

Barometric Pressure:

Begin	Middle	End	Average
30.12	30.06	30.01	30.06

Room Air Velocity, fpn
<50

OMNI Equipment Numbers: _____

Export to PDF

Velocity Traverse Data

	Pt.1	Pt.2	Pt.3	Pt.4	Pt.5	Pt.6	Pt.7	Pt.8	Center	
Initial dP	0.120	0.148	0.148	0.110	0.110	0.144	0.154	0.138	0.166	"H2O
Temp:	95	95	95	96	96	96	96	96	96	°F

V_{strav} 24.77 ft/sec V_{scent} 27.63 ft/sec F_p 0.896

qwq

	Particulate Sampling Data														Fuel Weight (lb)		Temperature Data (°F)													Stack Gas Data		
Elapsed Time (min)	Gas Meter 1 (ft^3)	Gas Meter 2 (ft^3)	Sample Rate 1 (cfm)	Sample Rate 2 (cfm)	Orifice dH 1 ("H_2O)	Meter 1 Temp (°F)	Meter 1 Vacuum ("Hg)	Orifice dH 2 ("H_2O)	Meter 2 Temp (°F)	Meter 2 Vacuum ("Hg)	Dilution Tunnel (°F)	Dilution Tunnel Center dP	Pro. Rate 1	Pro. Rate 2	Scale Reading	Weight Change	Firebox Top	Firebox Bottom	Firebox Back	Firebox Left	Firebox Right	Avg. Stove Surface (Tot = ΔT)	Catalyst Exit	Stack	Filter 1	Dryer Exit 1	Filter 2	Dryer Exit 2	Ambient	Draft ("H_2O)	CO_2 (%)	CO (%)
85	13.597	13.584	0.16	0.16	1.23	90	2.53	0.95	91	1.5	100	0.165	100	100	7.0	-0.1	761	313	375	480	413	468	1148	391	81	76	81	75	82	-0.059	14.42	0.18
86	13.757	13.744	0.16	0.16	1.23	90	2.53	0.95	91	1.5	100	0.162	101	101	6.9	-0.1	760	313	377	481	414	469	1142	389	81	75	81	75	82	-0.058	14.33	0.11
87	13.919	13.905	0.16	0.16	1.23	91	2.53	0.95	91	1.5	100	0.162	102	101	6.8	-0.1	757	313	378	482	415	469	1136	387	81	75	81	75	81	-0.059	14.11	0.11
88	14.079	14.066	0.16	0.16	1.23	91	2.53	0.95	91	1.6	100	0.163	100	101	6.7	-0.1	755	313	380	483	416	469	1131	385	81	74	81	75	82	-0.059	13.74	0.09
89	14.239	14.226	0.16	0.16	1.23	91	2.53	0.96	91	1.5	99	0.162	100	100	6.6	-0.1	751	312	382	484	417	469	1124	382	81	74	81	74	82	-0.058	13.35	0.09
90	14.400	14.386	0.16	0.16	1.23	91	2.53	0.95	91	1.5	99	0.165	100	100	6.5	-0.1	746	312	383	485	418	469	1115	380	81	73	81	74	82	-0.058	12.87	0.08
91	14.560	14.547	0.16	0.16	1.24	91	2.52	0.95	91	1.5	99	0.162	100	101	6.4	-0.1	741	312	385	486	419	469	1105	377	81	73	81	74	82	-0.058	12.82	0.09
92	14.722	14.708	0.16	0.16	1.23	91	2.53	0.95	91	1.5	99	0.162	102	101	6.3	-0.1	735	312	387	486	419	468	1095	376	81	73	81	74	82	-0.058	12.59	0.08
93	14.882	14.868	0.16	0.16	1.23	91	2.53	0.95	91	1.5	99	0.164	100	100	6.1	-0.2	727	312	389	487	420	467	1086	372	81	72	81	74	82	-0.057	12.46	0.07
94	15.043	15.030	0.16	0.16	1.23	91	2.53	0.95	91	1.5	99	0.164	100	101	6.1	0	720	312	390	488	421	466	1076	369	81	72	81	73	82	-0.057	12.11	0.07
95	15.203	15.190	0.16	0.16	1.23	91	2.53	0.95	91	1.5	99	0.166	99	99	6.1	0	713	312	392	488	421	465	1067	366	81	72	81	73	82	-0.056	12.1	0.08
96	15.364	15.350	0.16	0.16	1.23	91	2.53	0.95	91	1.5	99	0.164	100	100	6.0	-0.1	706	311	393	488	422	464	1057	362	81	71	81	73	82	-0.057	11.83	0.09
97	15.525	15.512	0.16	0.16	1.22	91	2.53	0.95	91	1.5	99	0.163	101	101	5.9	-0.1	702	311	395	489	422	464	1049	360	81	71	81	73	82	-0.056	11.72	0.09
98	15.686	15.672	0.16	0.16	1.23	91	2.53	0.95	91	1.5	98	0.164	100	100	5.8	-0.1	697	311	396	489	423	463	1042	358	81	71	81	72	82	-0.055	11.68	0.09
99	15.847	15.832	0.16	0.16	1.23	91	2.53	0.96	91	1.5	98	0.164	100	100	5.8	0	691	311	397	489	423	462	1036	356	81	70	81	72	82	-0.056	11.67	0.09
100	16.007	15.993	0.16	0.16	1.23	91	2.52	0.95	91	1.5	97	0.165	99	100	5.7	-0.1	687	311	398	489	423	462	1031	353	81	70	81	72	82	-0.055	11.78	0.09
101	16.168	16.154	0.16	0.16	1.23	91	2.53	0.95	91	1.5	98	0.164	100	100	5.6	-0.1	683	311	398	489	423	461	1026	352	81	70	81	72	82	-0.055	11.74	0.09
102	16.328	16.315	0.16	0.16	1.23	91	2.53	0.95	91	1.5	98	0.165	99	100	5.5	-0.1	678	311	399	489	423	460	1022	351	81	70	81	71	82	-0.054	11.81	0.09
103	16.490	16.475	0.16	0.16	1.23	91	2.53	0.95	91	1.5	98	0.164	101	100	5.5	0	673	311	399	489	423	459	1019	349	81	70	81	71	83	-0.055	11.7	0.09
104	16.651	16.637	0.16	0.16	1.22	91	2.53	0.95	91	1.5	98	0.163	101	101	5.4	-0.1	669	310	400	489	423	458	1016	347	81	69	81	71	83	-0.054	11.76	0.09
105	16.811	16.797	0.16	0.16	1.23	91	2.53	0.96	91	1.5	98	0.165	99	99	5.3	-0.1	665	310	400	489	423	457	1012	346	81	69	81	71	83	-0.053	11.81	0.1
106	16.971	16.958	0.16	0.16	1.23	91	2.53	0.96	91	1.5	98	0.164	100	100	5.3	0	662	310	400	489	423	457	1010	345	81	69	81	71	83	-0.054	11.74	0.1
107	17.132	17.119	0.16	0.16	1.23	91	2.53	0.95	91	1.5	98	0.163	101	101	5.2	-0.1	659	310	401	489	423	456	1008	343	81	69	81	70	83	-0.053	11.79	0.09
108	17.294	17.280	0.16	0.16	1.23	91	2.53	0.95	91	1.5	98	0.164	101	100	5.1	-0.1	657	309	401	489	423	456	1006	343	81	69	81	70	83	-0.052	11.94	0.08
109	17.455	17.440	0.16	0.16	1.23	91	2.52	0.95	91	1.5	98	0.164	100	100	5.1	0	655	309	401	489	423	455	1004	343	81	69	81	70	83	-0.052	11.85	0.09
110	17.615	17.601	0.16	0.16	1.24	91	2.52	0.95	91	1.5	98	0.164	100	100	5.0	-0.1	653	309	402	488	424	455	1001	340	81	68	81	70	83	-0.053	12.15	0.09
111	17.776	17.762	0.16	0.16	1.23	91	2.53	0.95	92	1.5	98	0.163	101	101	4.9	-0.1	651	308	402	488	424	455	999	340	81	68	81	70	83	-0.051	12.26	0.09
112	17.936	17.923	0.16	0.16	1.23	91	2.53	0.96	92	1.5	98	0.165	99	100	4.9	0	650	308	402	487	424	454	997	339	81	68	81	70	83	-0.053	12.24	0.09
113	18.097	18.083	0.16	0.16	1.23	91	2.52	0.95	92	1.5	98	0.164	100	100	4.8	-0.1	648	308	403	487	424	454	997	338	81	68	81	69	83	-0.053	12.41	0.09
114	18.259	18.245	0.16	0.16	1.23	91	2.53	0.95	92	1.5	98	0.162	102	101	4.8	0	647	308	403	486	425	454	998	338	81	68	81	69	83	-0.052	12.28	0.09
115	18.420	18.406	0.16	0.16	1.23	91	2.53	0.95	92	1.5	98	0.164	100	100	4.7	-0.1	646	308	403	486	425	454	998	337	81	68	81	69	83	-0.052	12.41	0.09
116	18.580	18.566	0.16	0.16	1.23	91	2.53	0.95	92	1.5	98	0.164	100	100	4.6	-0.1	645	308	404	486	426	454	999	336	81	68	81	69	83	-0.052	12.2	0.09
117	18.741	18.727	0.16	0.16	1.23	91	2.53	0.95	92	1.5	98	0.165	100	100	4.6	0	644	307	404	485	426	453	1000	334	81	68	81	69	83	-0.051	12.31	0.09
118	18.902	18.888	0.16	0.16	1.23	91	2.52	0.95	92	1.5	98	0.165	100	100	4.5	-0.1	643	307	404	485	427	453	1000	334	81	68	81	69	83	-0.052	12.24	0.09
119	19.063	19.049	0.16	0.16	1.23	91	2.53	0.96	92	1.5	97	0.163	101	100	4.4	-0.1	643	307	405	484	428	453	999	333	81	68	81	69	82	-0.051	12.06	0.09
120	19.224	19.210	0.16	0.16	1.23	91	2.53	0.96	92	1.5	97	0.162	101	101	4.4	0	642	307	405	484	429	453	1000	333	81	68	81	69	82	-0.052	12.01	0.09
121	19.385	19.371	0.16	0.16	1.23	91	2.53	0.95	92	1.5	97	0.164	100	100	4.4	0	642	307	405	483	429	453	1000	332	81	68	81	69	83	-0.052	12	0.09
122	19.546	19.532	0.16	0.16	1.24	92	2.53	0.95	92	1.5	97	0.163	100	100	4.3	-0.1	641	308	405	483	430	453	998	332	81	68	81	69	83	-0.051	11.92	0.09
123	19.706	19.692	0.16	0.16	1.23	92	2.53	0.96	92	1.5	97	0.163	100	100	4.2	-0.1	640	308	406	482	431	453	997	331	81	67	81	69	82	-0.051	11.91	0.08
124	19.867	19.854	0.16	0.16	1.23	92	2.53	0.96	92	1.6	97	0.165	100	100	4.2	0	639	308	406	481	432	453	994	330	81	67	81	69	82	-0.051	11.76	0.09
125	20.029	20.015	0.16	0.16	1.23	92	2.53	0.95	92	1.5	97	0.164	101	100	4.1	-0.1	638	307	406	481	432	453	992	329	81	67	81	69	82	-0.051	11.72	0.09
126	20.190	20.176	0.16	0.16	1.23	92	2.53	0.96	92	1.5	97	0.164	100	100	4.1	0	638	307	407	480	433	453	990	328	81	67	81	69	83	-0.050	11.85	0.09
127	20.351	20.337	0.16	0.16	1.22	92	2.53	0.95	92	1.5	97	0.164	100	100	4.0	-0.1	636	308	407	480	434	453	988	327	81	67	81	69	83	-0.052	11.74	0.09
128	20.511	20.499	0.16	0.16	1.24	92	2.53	0.96	92	1.5	97	0.165	99	100	4.0	0	635	308	407	479	434	453	986	326	81	67	81	69	83	-0.050	11.72	0.09

Wood Heater Test Data

u

Run: 8

Manufacturer: Kuma Stoves
Model: K-251
Tracking No.: 2464
Project No.: 0123WM014E
Test Date: 16-May-23
Beginning Clock Time: 11:58

Total Sampling Time: 329 min
Recording Interval: 1 min
Tunnel Diameter: 6
Background Sample Volume: 49.001 cubic feet

PM Control Modules: 335,336
Dilution Tunnel MW(dry): 29.00 lb/lb-mole
Dilution Tunnel MW(wet): 28.78 lb/lb-mole
Dilution Tunnel H2O: 2.00 percent
Dilution Tunnel Static: -0.480 "H2O
Tunnel Area: 0.19635 ft2
Pitot Tube Cp: 0.99

Avg. Tunnel Velocity: 24.60 ft/sec.
Initial Tunnel Flow: 273.0 scfm
Average Tunnel Flow: 270.9 scfm
Post-Test Leak Check (1st Hr): 0.000 cfm @ 11 in. Hg
Post-Test Leak Check (1): 0.000 cfm @ 11 in. Hg
Post-Test Leak Check (2): 0.000 cfm @ 10 in. Hg
Average Test Piece Fuel Moisture: 20.05 Dry Basis %

Technician Signature:_____

Meter Box Y Factor: 1.007 (1) 1.015 (2) 1.012 (Amb)

Export to PDF

Barometric Pressure:

Begin	Middle	End	Average
30.12	30.06	30.01	30.06

Room Air Velocity, fpn
<50

OMNI Equipment Numbers: _____

Velocity Traverse Data

	Pt.1	Pt.2	Pt.3	Pt.4	Pt.5	Pt.6	Pt.7	Pt.8	Center	
Initial dP	0.120	0.148	0.148	0.110	0.110	0.144	0.154	0.138	0.166	"H2O
Temp:	95	95	95	96	96	96	96	96	96	°F

V_{strav} 24.77 ft/sec V_{scent} 27.63 ft/sec F_p 0.896

qwq

	Particulate Sampling Data														Fuel Weight (lb)		Temperature Data (°F)													Stack Gas Data		
Elapsed Time (min)	Gas Meter 1 (ft^3)	Gas Meter 2 (ft^3)	Sample Rate 1 (cfm)	Sample Rate 2 (cfm)	Orifice dH 1 ("H_2O)	Meter 1 Temp (°F)	Meter 1 Vacuum ("Hg)	Orifice dH 2 ("H_2O)	Meter 2 Temp (°F)	Meter 2 Vacuum ("Hg)	Dilution Tunnel (°F)	Dilution Tunnel Center dP	Pro. Rate 1	Pro. Rate 2	Scale Reading	Weight Change	Firebox Top	Firebox Bottom	Firebox Back	Firebox Left	Firebox Right	Avg. Stove Surface (Tot = ΔT)	Catalyst Exit	Stack	Filter 1	Dryer Exit 1	Filter 2	Dryer Exit 2	Ambient	Draft ("H_2O)	CO_2 (%)	CO (%)
129	20.672	20.659	0.16	0.16	1.23	92	2.52	0.96	92	1.5	97	0.165	100	99	4.0	0	633	308	408	479	435	453	984	326	81	67	81	69	83	-0.049	11.51	0.09
130	20.833	20.820	0.16	0.16	1.24	92	2.53	0.95	92	1.5	97	0.164	100	100	3.9	-0.1	632	308	408	479	436	453	982	325	81	67	81	69	83	-0.050	11.5	0.1
131	20.995	20.981	0.16	0.16	1.23	92	2.53	0.96	92	1.5	97	0.164	101	100	3.9	0	630	308	409	478	437	452	980	325	81	67	81	69	83	-0.050	11.53	0.09
132	21.156	21.142	0.16	0.16	1.23	92	2.53	0.95	92	1.5	97	0.164	100	100	3.8	-0.1	629	308	409	478	437	452	977	324	81	67	81	69	83	-0.048	11.38	0.1
133	21.317	21.303	0.16	0.16	1.23	92	2.52	0.95	92	1.5	97	0.165	100	100	3.7	-0.1	627	308	410	478	438	452	972	324	81	67	81	69	83	-0.051	11.28	0.09
134	21.477	21.464	0.16	0.16	1.23	92	2.53	0.95	92	1.5	97	0.165	99	100	3.7	0	625	309	410	477	439	452	966	323	81	67	81	69	83	-0.050	11.12	0.09
135	21.639	21.626	0.16	0.16	1.23	92	2.52	0.95	92	1.5	97	0.165	100	100	3.7	0	623	309	411	477	439	452	960	322	81	67	81	69	82	-0.051	11.02	0.09
136	21.800	21.786	0.16	0.16	1.23	92	2.52	0.95	92	1.5	96	0.162	101	100	3.6	-0.1	622	309	411	476	440	452	955	321	81	67	81	69	83	-0.048	10.93	0.1
137	21.961	21.947	0.16	0.16	1.23	92	2.52	0.95	92	1.5	97	0.163	100	100	3.6	0	620	309	412	476	440	451	950	320	81	67	81	69	83	-0.050	10.84	0.1
138	22.122	22.108	0.16	0.16	1.23	92	2.53	0.95	92	1.5	97	0.165	100	100	3.5	-0.1	618	310	412	475	440	451	946	319	81	67	81	69	83	-0.050	10.79	0.09
139	22.283	22.270	0.16	0.16	1.23	92	2.53	0.95	92	1.5	96	0.162	101	101	3.5	0	616	310	413	475	440	451	942	318	81	67	81	69	82	-0.050	10.77	0.09
140	22.443	22.430	0.16	0.16	1.23	92	2.52	0.95	92	1.5	96	0.163	100	100	3.4	-0.1	614	310	413	474	440	450	939	317	81	67	81	69	83	-0.049	10.65	0.09
141	22.604	22.591	0.16	0.16	1.23	92	2.52	0.95	92	1.5	96	0.163	100	100	3.4	0	612	310	413	473	440	450	936	316	81	67	81	69	83	-0.049	10.52	0.09
142	22.766	22.753	0.16	0.16	1.22	92	2.52	0.95	92	1.6	96	0.166	100	100	3.3	-0.1	610	310	414	473	440	449	933	316	81	67	81	69	83	-0.049	10.63	0.1
143	22.927	22.914	0.16	0.16	1.23	92	2.53	0.95	92	1.6	96	0.163	100	100	3.3	0	608	310	414	472	440	449	930	316	81	67	81	69	83	-0.049	10.59	0.1
144	23.088	23.074	0.16	0.16	1.23	92	2.53	0.95	92	1.5	97	0.165	100	99	3.3	0	607	311	414	471	440	449	928	315	81	67	81	69	83	-0.049	10.73	0.1
145	23.249	23.235	0.16	0.16	1.23	92	2.53	0.95	92	1.5	97	0.163	100	100	3.2	-0.1	606	311	414	471	440	448	926	315	81	67	81	69	83	-0.048	10.7	0.1
146	23.409	23.397	0.16	0.16	1.23	92	2.53	0.95	92	1.6	96	0.164	99	101	3.2	0	605	311	414	470	440	448	925	315	81	67	81	69	83	-0.051	10.95	0.1
147	23.570	23.557	0.16	0.16	1.23	92	2.52	0.95	92	1.5	96	0.163	100	100	3.1	-0.1	605	311	415	469	440	448	925	315	81	67	81	69	82	-0.049	11.15	0.12
148	23.732	23.718	0.16	0.16	1.23	92	2.53	0.96	92	1.5	96	0.163	101	100	3.1	0	605	312	415	468	440	448	926	314	81	67	81	69	82	-0.048	11.15	0.12
149	23.893	23.880	0.16	0.16	1.23	92	2.53	0.95	92	1.5	96	0.163	100	101	3.0	-0.1	605	312	415	468	440	448	927	314	81	67	81	69	83	-0.048	11.06	0.1
150	24.054	24.041	0.16	0.16	1.23	92	2.52	0.95	92	1.5	96	0.164	100	100	3.0	0	605	312	415	467	439	448	925	312	81	67	81	69	83	-0.048	10.64	0.11
151	24.215	24.201	0.16	0.16	1.23	92	2.53	0.95	92	1.5	96	0.164	100	99	3.0	0	606	312	415	466	439	448	925	311	81	67	81	69	83	-0.048	10.38	0.12
152	24.376	24.363	0.16	0.16	1.24	92	2.53	0.95	92	1.5	96	0.163	100	101	3.0	0	607	312	415	465	439	448	925	311	81	67	81	69	83	-0.048	9.91	0.13
153	24.537	24.524	0.16	0.16	1.23	92	2.53	0.95	92	1.6	96	0.164	100	100	3.0	0	606	313	415	465	439	448	922	311	81	67	81	69	83	-0.048	9.73	0.13
154	24.699	24.685	0.16	0.16	1.23	92	2.52	0.95	92	1.5	96	0.165	100	100	3.0	0	604	313	415	464	439	447	916	310	81	67	81	69	83	-0.047	9.56	0.13
155	24.859	24.846	0.16	0.16	1.22	92	2.53	0.95	92	1.5	96	0.163	100	100	2.9	-0.1	602	313	415	463	438	446	912	309	81	68	81	69	83	-0.048	9.95	0.14
156	25.020	25.008	0.16	0.16	1.23	92	2.53	0.95	92	1.5	96	0.165	100	100	2.9	0	600	313	415	462	438	446	908	307	81	68	81	69	83	-0.048	10	0.14
157	25.181	25.169	0.16	0.16	1.23	92	2.53	0.95	92	1.5	96	0.164	100	100	2.8	-0.1	597	313	415	461	438	445	905	306	81	68	81	69	83	-0.047	9.91	0.14
158	25.342	25.329	0.16	0.16	1.23	92	2.52	0.95	92	1.5	96	0.164	100	99	2.8	0	593	314	415	460	437	444	902	305	81	68	81	69	83	-0.047	9.91	0.14
159	25.503	25.490	0.16	0.16	1.23	92	2.53	0.95	92	1.5	96	0.161	101	101	2.7	-0.1	590	314	415	459	437	443	900	304	81	68	81	69	83	-0.047	9.96	0.14
160	25.665	25.652	0.16	0.16	1.23	92	2.53	0.95	92	1.6	96	0.163	101	101	2.7	0	588	314	415	458	437	442	897	303	81	68	81	69	83	-0.047	9.83	0.13
161	25.826	25.812	0.16	0.16	1.23	92	2.53	0.95	92	1.5	96	0.163	100	100	2.6	-0.1	584	314	415	457	436	441	894	302	81	68	81	69	83	-0.047	9.56	0.13
162	25.986	25.974	0.16	0.16	1.23	92	2.53	0.95	92	1.5	96	0.165	99	100	2.6	0	581	314	415	456	436	440	890	300	81	68	81	69	83	-0.047	9.46	0.13
163	26.147	26.135	0.16	0.16	1.23	92	2.52	0.95	92	1.6	96	0.164	100	100	2.6	0	578	315	415	455	435	440	885	299	81	68	81	69	83	-0.046	9.18	0.13
164	26.308	26.296	0.16	0.16	1.23	92	2.53	0.95	92	1.5	96	0.163	100	100	2.5	-0.1	575	315	415	454	435	439	880	298	81	68	81	69	83	-0.046	9.01	0.13
165	26.470	26.457	0.16	0.16	1.22	92	2.53	0.95	92	1.5	95	0.164	101	100	2.5	0	571	315	415	453	435	438	874	296	81	68	81	69	83	-0.046	8.89	0.12
166	26.631	26.618	0.16	0.16	1.23	92	2.53	0.95	92	1.5	95	0.164	100	100	2.4	-0.1	567	316	415	452	434	437	868	293	81	68	81	69	83	-0.046	8.91	0.12
167	26.792	26.780	0.16	0.16	1.23	92	2.53	0.95	92	1.5	96	0.163	100	101	2.4	0	563	316	415	452	434	436	861	292	81	68	81	70	83	-0.045	8.74	0.12
168	26.952	26.940	0.16	0.16	1.23	92	2.52	0.95	92	1.5	95	0.163	100	100	2.4	0	560	316	415	451	434	435	856	291	81	68	81	70	83	-0.045	8.56	0.13
169	27.113	27.101	0.16	0.16	1.23	92	2.52	0.95	92	1.5	95	0.164	100	100	2.4	0	556	316	415	450	434	434	850	290	81	68	81	70	83	-0.045	8.66	0.12
170	27.274	27.263	0.16	0.16	1.23	92	2.52	0.95	92	1.5	95	0.162	101	101	2.4	0	552	317	414	448	433	433	845	289	81	68	81	70	83	-0.045	8.73	0.12
171	27.436	27.424	0.16	0.16	1.23	92	2.52	0.95	92	1.5	95	0.164	101	100	2.3	-0.1	549	317	414	448	433	432	841	288	81	68	81	70	83	-0.045	8.75	0.12
172	27.597	27.584	0.16	0.16	1.23	92	2.53	0.95	92	1.5	95	0.162	101	100	2.3	0	546	317	414	447	432	431	837	286	81	68	81	70	83	-0.044	8.76	0.12

Wood Heater Test Data

u

Run: 8

Manufacturer: Kuma Stoves
Model: K-251
Tracking No.: 2464
Project No.: 0123WM014E
Test Date: 16-May-23
Beginning Clock Time: 11:58

Total Sampling Time: 329 min
Recording Interval: 1 min
Tunnel Diameter: 6
Background Sample Volume: 49.001 cubic feet

PM Control Modules: 335,336
Dilution Tunnel MW(dry): 29.00 lb/lb-mole
Dilution Tunnel MW(wet): 28.78 lb/lb-mole
Dilution Tunnel H2O: 2.00 percent
Dilution Tunnel Static: -0.480 "H2O
Tunnel Area: 0.19635 ft2
Pitot Tube Cp: 0.99

Avg. Tunnel Velocity: 24.60 ft/sec.
Initial Tunnel Flow: 273.0 scfm
Average Tunnel Flow: 270.9 scfm
Post-Test Leak Check (1st Hr): 0.000 cfm @ 11 in. Hg
Post-Test Leak Check (1): 0.000 cfm @ 11 in. Hg
Post-Test Leak Check (2): 0.000 cfm @ 10 in. Hg
Average Test Piece Fuel Moisture: 20.05 Dry Basis %

Technician Signature:_____

Meter Box Y Factor: 1.007 (1) 1.015 (2) 1.012 (Amb)

Export to PDF

Barometric Pressure:

Begin	Middle	End	Average
30.12	30.06	30.01	30.06

Room Air Velocity, fpn
<50

OMNI Equipment Numbers: _____

Velocity Traverse Data

	Pt.1	Pt.2	Pt.3	Pt.4	Pt.5	Pt.6	Pt.7	Pt.8	Center	
Initial dP	0.120	0.148	0.148	0.110	0.110	0.144	0.154	0.138	0.166	"H2O
Temp:	95	95	95	96	96	96	96	96	96	°F

V_{strav} 24.77 ft/sec V_{scent} 27.63 ft/sec F_p 0.896

qwq

	Particulate Sampling Data														Fuel Weight (lb)		Temperature Data (°F)													Stack Gas Data		
Elapsed Time (min)	Gas Meter 1 (ft^3)	Gas Meter 2 (ft^3)	Sample Rate 1 (cfm)	Sample Rate 2 (cfm)	Orifice dH 1 ("H_2O)	Meter 1 Temp (°F)	Meter 1 Vacuum ("Hg)	Orifice dH 2 ("H_2O)	Meter 2 Temp (°F)	Meter 2 Vacuum ("Hg)	Dilution Tunnel (°F)	Dilution Tunnel Center dP	Pro. Rate 1	Pro. Rate 2	Scale Reading	Weight Change	Firebox Top	Firebox Bottom	Firebox Back	Firebox Left	Firebox Right	Avg. Stove Surface (Tot = ΔT)	Catalyst Exit	Stack	Filter 1	Dryer Exit 1	Filter 2	Dryer Exit 2	Ambient	Draft ("H_2O)	CO_2 (%)	CO (%)
173	27.758	27.745	0.16	0.16	1.23	92	2.53	0.95	92	1.5	95	0.161	101	101	2.3	0	542	317	414	445	432	430	833	285	81	68	81	70	83	-0.044	8.78	0.12
174	27.919	27.907	0.16	0.16	1.23	92	2.52	0.95	92	1.5	95	0.163	100	101	2.3	0	540	317	414	445	432	430	830	284	81	68	81	70	83	-0.044	8.81	0.12
175	28.079	28.068	0.16	0.16	1.23	92	2.52	0.95	92	1.5	95	0.166	99	99	2.2	-0.1	537	317	414	444	431	429	827	283	81	68	81	70	83	-0.045	8.76	0.12
176	28.241	28.228	0.16	0.16	1.23	92	2.52	0.95	92	1.5	95	0.165	100	99	2.2	0	534	317	414	443	431	428	823	282	81	68	81	70	83	-0.043	8.87	0.12
177	28.402	28.390	0.16	0.16	1.23	92	2.52	0.95	92	1.5	95	0.163	100	101	2.2	0	531	317	414	442	431	427	820	281	81	68	81	70	83	-0.043	8.75	0.12
178	28.563	28.551	0.16	0.16	1.22	92	2.52	0.95	92	1.5	95	0.164	100	100	2.2	0	529	317	414	441	430	426	817	280	81	68	81	70	83	-0.044	8.74	0.12
179	28.724	28.712	0.16	0.16	1.23	92	2.52	0.95	92	1.5	95	0.163	100	100	2.2	0	526	318	413	440	430	425	814	280	81	68	81	70	82	-0.043	8.79	0.13
180	28.885	28.873	0.16	0.16	1.23	92	2.52	0.95	92	1.5	94	0.163	100	100	2.1	-0.1	525	318	413	439	430	425	812	280	81	68	81	70	82	-0.043	8.67	0.13
181	29.046	29.034	0.16	0.16	1.23	92	2.53	0.95	92	1.5	94	0.163	100	100	2.1	0	523	318	413	438	429	424	811	278	81	68	81	70	82	-0.044	8.66	0.13
182	29.207	29.195	0.16	0.16	1.23	92	2.53	0.94	92	1.5	94	0.163	100	100	2.1	0	521	318	413	437	429	424	808	278	81	68	81	70	82	-0.044	8.6	0.12
183	29.369	29.355	0.16	0.16	1.23	92	2.52	0.95	92	1.5	94	0.165	100	99	2.1	0	519	319	412	436	429	423	806	277	81	68	81	70	82	-0.043	8.58	0.12
184	29.529	29.516	0.16	0.16	1.21	92	2.51	0.94	92	1.5	94	0.165	99	100	2.2	0.1	517	319	412	435	428	422	804	276	81	68	81	70	82	-0.043	8.54	0.12
185	29.689	29.676	0.16	0.16	1.22	92	2.51	0.94	92	1.5	93	0.163	99	99	2.2	0	515	319	412	435	428	422	802	276	81	68	81	70	83	-0.043	8.54	0.14
186	29.849	29.836	0.16	0.16	1.22	92	2.51	0.94	92	1.5	93	0.164	99	99	2.2	0	513	319	412	434	428	421	800	275	81	68	81	70	83	-0.043	8.6	0.14
187	30.010	29.997	0.16	0.16	1.22	92	2.51	0.94	92	1.5	94	0.163	100	100	2.1	-0.1	512	320	411	433	427	421	799	275	81	68	81	70	83	-0.043	8.49	0.15
188	30.171	30.158	0.16	0.16	1.21	92	2.52	0.94	92	1.5	94	0.163	100	100	2.1	0	511	320	411	432	427	420	798	276	81	68	81	70	83	-0.043	8.54	0.15
189	30.331	30.318	0.16	0.16	1.21	93	2.51	0.94	92	1.5	94	0.164	99	99	2.0	-0.1	511	320	411	431	426	420	797	275	81	68	81	70	83	-0.043	8.48	0.15
190	30.491	30.478	0.16	0.16	1.21	92	2.51	0.94	92	1.5	94	0.165	99	99	2.0	0	509	320	411	431	426	419	796	274	81	68	81	70	83	-0.043	8.5	0.15
191	30.651	30.639	0.16	0.16	1.22	92	2.51	0.94	92	1.5	94	0.164	99	100	2.0	0	508	321	410	430	425	419	795	274	81	68	81	70	83	-0.043	8.54	0.15
192	30.812	30.799	0.16	0.16	1.22	92	2.51	0.94	92	1.5	94	0.164	100	99	2.0	0	508	321	410	429	425	419	794	274	81	68	81	70	83	-0.042	8.54	0.15
193	30.973	30.960	0.16	0.16	1.22	93	2.51	0.94	92	1.5	94	0.163	100	100	2.0	0	507	321	410	428	424	418	793	275	81	69	81	70	83	-0.043	8.54	0.15
194	31.134	31.121	0.16	0.16	1.22	93	2.51	0.94	92	1.5	94	0.164	100	100	1.9	-0.1	506	321	410	428	424	418	793	274	81	69	81	70	83	-0.043	8.52	0.15
195	31.294	31.281	0.16	0.16	1.22	93	2.52	0.94	92	1.5	94	0.163	99	100	1.9	0	506	321	409	427	423	417	792	274	81	69	81	70	83	-0.042	8.48	0.15
196	31.454	31.441	0.16	0.16	1.22	93	2.52	0.94	92	1.5	94	0.165	99	99	1.9	0	505	321	409	426	423	417	790	273	81	69	81	70	83	-0.043	8.44	0.15
197	31.614	31.603	0.16	0.16	1.22	93	2.51	0.95	92	1.5	94	0.164	99	100	1.9	0	504	322	409	425	422	416	789	273	81	69	81	70	83	-0.042	8.39	0.15
198	31.776	31.763	0.16	0.16	1.22	93	2.51	0.94	92	1.5	94	0.164	100	99	1.9	0	503	322	409	425	422	416	788	272	81	69	81	70	83	-0.043	8.43	0.15
199	31.936	31.923	0.16	0.16	1.21	93	2.51	0.95	92	1.5	94	0.163	99	100	1.9	0	502	322	408	424	422	416	787	272	81	69	81	70	83	-0.042	8.5	0.16
200	32.097	32.084	0.16	0.16	1.22	93	2.51	0.94	92	1.5	94	0.166	99	99	1.9	0	501	322	408	423	421	415	786	271	81	69	81	70	83	-0.042	8.47	0.16
201	32.257	32.245	0.16	0.16	1.22	93	2.52	0.94	92	1.5	94	0.164	99	100	1.9	0	501	323	408	422	421	415	786	272	81	69	81	70	82	-0.042	8.38	0.15
202	32.417	32.405	0.16	0.16	1.22	93	2.51	0.94	92	1.5	94	0.165	99	99	1.8	-0.1	500	323	407	421	420	414	785	271	81	69	81	70	83	-0.043	8.33	0.15
203	32.579	32.566	0.16	0.16	1.22	93	2.51	0.94	92	1.5	94	0.164	100	100	1.8	0	500	323	407	421	420	414	784	271	81	69	81	70	83	-0.042	8.31	0.15
204	32.739	32.727	0.16	0.16	1.22	93	2.51	0.94	92	1.5	94	0.165	99	100	1.8	0	499	323	407	420	420	414	784	271	81	69	81	70	83	-0.042	8.25	0.16
205	32.899	32.887	0.16	0.16	1.22	93	2.51	0.94	92	1.5	94	0.164	99	99	1.8	0	498	323	407	419	419	413	783	270	81	69	81	70	83	-0.042	8.3	0.15
206	33.059	33.047	0.16	0.16	1.22	93	2.52	0.94	92	1.5	94	0.164	99	99	1.8	0	497	323	406	418	419	413	782	270	81	69	81	70	83	-0.042	8.26	0.15
207	33.220	33.209	0.16	0.16	1.22	93	2.51	0.94	92	1.5	94	0.162	100	101	1.8	0	496	324	406	418	419	413	780	270	81	69	81	70	83	-0.042	8.25	0.14
208	33.381	33.369	0.16	0.16	1.22	93	2.51	0.94	92	1.5	94	0.162	100	100	1.7	-0.1	495	324	406	417	418	412	779	269	81	69	81	70	83	-0.042	8.26	0.15
209	33.542	33.529	0.16	0.16	1.22	93	2.52	0.94	92	1.5	94	0.163	100	100	1.7	0	494	324	405	416	418	411	777	269	81	69	81	70	83	-0.042	8.24	0.14
210	33.702	33.690	0.16	0.16	1.22	93	2.51	0.94	92	1.5	94	0.164	99	100	1.7	0	493	324	405	415	418	411	776	269	81	69	81	70	83	-0.041	8.19	0.15
211	33.862	33.851	0.16	0.16	1.22	93	2.51	0.94	92	1.5	94	0.163	99	100	1.7	0	492	324	405	415	417	411	775	268	81	69	81	70	83	-0.042	8.17	0.15
212	34.023	34.011	0.16	0.16	1.22	93	2.52	0.94	92	1.5	94	0.165	99	99	1.7	0	491	324	404	414	417	410	773	268	81	69	81	70	83	-0.042	8.1	0.12
213	34.184	34.171	0.16	0.16	1.22	93	2.51	0.94	92	1.5	94	0.163	100	100	1.6	-0.1	489	324	404	413	417	409	771	267	81	69	81	70	83	-0.042	8.05	0.13
214	34.345	34.333	0.16	0.16	1.21	93	2.51	0.94	92	1.5	94	0.165	99	100	1.6	0	488	324	404	413	416	409	768	267	81	69	81	70	82	-0.042	8.06	0.12
215	34.505	34.493	0.16	0.16	1.22	93	2.51	0.94	92	1.5	94	0.166	98	99	1.6	0	487	324	404	412	416	409	766	266	81	69	81	70	82	-0.042	7.96	0.13
216	34.665	34.653	0.16	0.16	1.21	93	2.51	0.94	92	1.5	94	0.163	99	100	1.6	0	485	324	403	411	415	408	765	265	81	69	81	70	82	-0.042	8.03	0.12

Wood Heater Test Data

u

Run: 8

Manufacturer: Kuma Stoves
Model: K-251
Tracking No.: 2464
Project No.: 0123WM014E
Test Date: 16-May-23
Beginning Clock Time: 11:58

Total Sampling Time: 329 min
Recording Interval: 1 min
Tunnel Diameter: 6
Background Sample Volume: 49.001 cubic feet

PM Control Modules: 335,336
Dilution Tunnel MW(dry): 29.00 lb/lb-mole
Dilution Tunnel MW(wet): 28.78 lb/lb-mole
Dilution Tunnel H2O: 2.00 percent
Dilution Tunnel Static: -0.480 "H2O
Tunnel Area: 0.19635 ft2
Pitot Tube Cp: 0.99

Avg. Tunnel Velocity: 24.60 ft/sec.
Initial Tunnel Flow: 273.0 scfm
Average Tunnel Flow: 270.9 scfm
Post-Test Leak Check (1st Hr): 0.000 cfm @ 11 in. Hg
Post-Test Leak Check (1): 0.000 cfm @ 11 in. Hg
Post-Test Leak Check (2): 0.000 cfm @ 10 in. Hg
Average Test Piece Fuel Moisture: 20.05 Dry Basis %

Technician Signature:_____

Meter Box Y Factor: 1.007 (1) 1.015 (2) 1.012 (Amb)

Export to PDF

Barometric Pressure:	Begin	Middle	End	Average
	30.12	30.06	30.01	30.06

Room Air Velocity, fpn
<50

OMNI Equipment Numbers: _____

Velocity Traverse Data

	Pt.1	Pt.2	Pt.3	Pt.4	Pt.5	Pt.6	Pt.7	Pt.8	Center	
Initial dP	0.120	0.148	0.148	0.110	0.110	0.144	0.154	0.138	0.166	"H2O
Temp:	95	95	95	96	96	96	96	96	96	°F

V_{strav} 24.77 ft/sec V_{scent} 27.63 ft/sec F_p 0.896

qwq

	Particulate Sampling Data														Fuel Weight (lb)		Temperature Data (°F)													Stack Gas Data		
Elapsed Time (min)	Gas Meter 1 (ft^3)	Gas Meter 2 (ft^3)	Sample Rate 1 (cfm)	Sample Rate 2 (cfm)	Orifice dH 1 ("H_2O)	Meter 1 Temp (°F)	Meter 1 Vacuum ("Hg)	Orifice dH 2 ("H_2O)	Meter 2 Temp (°F)	Meter 2 Vacuum ("Hg)	Dilution Tunnel (°F)	Dilution Tunnel Center dP	Pro. Rate 1	Pro. Rate 2	Scale Reading	Weight Change	Firebox Top	Firebox Bottom	Firebox Back	Firebox Left	Firebox Right	Avg. Stove Surface (Tot = ΔT)	Catalyst Exit	Stack	Filter 1	Dryer Exit 1	Filter 2	Dryer Exit 2	Ambient	Draft ("H_2O)	CO_2 (%)	CO (%)
217	34.825	34.815	0.16	0.16	1.22	93	2.52	0.94	93	1.5	93	0.164	99	100	1.6	0	484	325	403	411	415	408	763	265	81	69	81	71	82	-0.041	8.05	0.12
218	34.986	34.975	0.16	0.16	1.22	93	2.51	0.94	93	1.5	93	0.163	100	99	1.6	0	483	325	403	410	414	407	761	264	81	69	81	71	82	-0.041	7.96	0.13
219	35.147	35.135	0.16	0.16	1.22	93	2.51	0.94	92	1.5	94	0.163	100	100	1.5	-0.1	482	325	403	410	414	407	760	264	81	69	81	71	83	-0.042	7.91	0.13
220	35.307	35.296	0.16	0.16	1.22	93	2.51	0.94	93	1.5	94	0.162	100	100	1.5	0	481	324	403	409	413	406	759	264	81	69	81	71	82	-0.042	7.87	0.15
221	35.468	35.457	0.16	0.16	1.22	93	2.52	0.94	93	1.5	93	0.162	100	100	1.5	0	480	325	403	409	413	406	759	264	81	69	81	71	82	-0.042	7.85	0.15
222	35.628	35.616	0.16	0.16	1.22	93	2.51	0.94	92	1.5	94	0.163	99	99	1.5	0	480	325	402	408	412	405	759	264	81	70	81	71	82	-0.041	7.85	0.14
223	35.789	35.777	0.16	0.16	1.22	93	2.51	0.94	93	1.5	93	0.164	100	100	1.5	0	479	325	402	407	412	405	759	264	81	70	81	71	82	-0.041	7.94	0.14
224	35.950	35.938	0.16	0.16	1.22	93	2.51	0.94	93	1.5	93	0.162	100	100	1.5	0	479	325	402	407	411	405	758	264	81	70	81	71	82	-0.042	7.83	0.14
225	36.110	36.098	0.16	0.16	1.21	93	2.51	0.94	93	1.5	93	0.163	99	99	1.5	0	478	326	402	406	411	405	757	264	81	70	81	71	82	-0.042	7.83	0.14
226	36.270	36.259	0.16	0.16	1.22	93	2.51	0.94	93	1.5	93	0.164	99	100	1.5	0	477	326	402	406	410	404	756	263	81	70	81	71	82	-0.041	7.78	0.13
227	36.431	36.420	0.16	0.16	1.22	93	2.51	0.94	93	1.5	93	0.163	100	100	1.4	-0.1	476	326	402	405	409	404	753	263	81	70	81	71	82	-0.042	7.75	0.13
228	36.591	36.580	0.16	0.16	1.22	93	2.51	0.94	93	1.5	93	0.163	99	99	1.4	0	475	327	401	404	409	403	751	262	81	70	81	71	82	-0.041	7.7	0.12
229	36.753	36.741	0.16	0.16	1.22	93	2.51	0.94	93	1.5	93	0.160	101	101	1.4	0	474	327	401	404	408	403	749	262	81	70	81	71	82	-0.042	7.63	0.12
230	36.913	36.902	0.16	0.16	1.21	93	2.52	0.94	93	1.5	94	0.162	100	100	1.4	0	472	328	401	403	408	402	746	262	81	70	81	71	82	-0.041	7.62	0.12
231	37.073	37.063	0.16	0.16	1.22	93	2.51	0.94	93	1.5	94	0.164	99	100	1.4	0	471	328	401	403	407	402	744	261	81	70	81	71	82	-0.042	7.62	0.12
232	37.233	37.222	0.16	0.16	1.22	93	2.51	0.94	93	1.5	94	0.163	99	99	1.4	0	470	329	401	402	407	402	742	261	81	70	81	71	82	-0.041	7.71	0.13
233	37.394	37.383	0.16	0.16	1.22	93	2.51	0.94	92	1.5	94	0.163	100	100	1.4	0	469	330	401	402	406	402	741	260	81	70	81	71	82	-0.041	7.71	0.12
234	37.555	37.544	0.16	0.16	1.22	93	2.51	0.94	93	1.5	93	0.163	100	100	1.4	0	468	330	401	401	406	401	740	260	81	70	81	71	82	-0.041	7.64	0.12
235	37.716	37.704	0.16	0.16	1.21	93	2.51	0.94	93	1.5	93	0.163	100	99	1.3	-0.1	467	331	401	401	405	401	738	260	81	70	81	71	82	-0.041	7.59	0.12
236	37.876	37.865	0.16	0.16	1.22	93	2.51	0.94	93	1.5	94	0.163	99	100	1.3	0	466	332	401	400	405	401	737	259	81	70	81	71	82	-0.041	7.63	0.12
237	38.036	38.026	0.16	0.16	1.22	93	2.51	0.94	93	1.5	94	0.162	100	100	1.3	0	465	333	401	399	404	400	736	258	81	70	81	71	82	-0.041	7.57	0.12
238	38.196	38.186	0.16	0.16	1.22	93	2.51	0.94	93	1.5	94	0.163	99	99	1.3	0	464	334	401	399	404	400	734	258	81	70	81	71	82	-0.041	7.57	0.12
239	38.358	38.347	0.16	0.16	1.22	93	2.51	0.94	93	1.5	93	0.163	101	100	1.3	0	463	334	401	398	403	400	733	258	81	70	81	71	82	-0.041	7.63	0.12
240	38.518	38.508	0.16	0.16	1.21	93	2.51	0.94	93	1.5	93	0.163	99	100	1.3	0	462	335	401	398	403	400	732	257	81	70	81	71	82	-0.041	7.59	0.12
241	38.678	38.668	0.16	0.16	1.22	93	2.51	0.94	93	1.5	93	0.163	99	99	1.3	0	461	336	402	397	402	400	731	257	81	70	81	71	82	-0.041	7.59	0.12
242	38.839	38.828	0.16	0.16	1.22	93	2.52	0.94	93	1.5	93	0.165	99	99	1.2	-0.1	460	337	402	397	402	400	730	257	81	70	81	71	82	-0.041	7.63	0.12
243	38.999	38.989	0.16	0.16	1.22	93	2.51	0.94	93	1.5	93	0.164	99	100	1.2	0	459	337	402	396	401	399	728	257	81	71	81	71	82	-0.041	7.73	0.12
244	39.161	39.150	0.16	0.16	1.22	93	2.51	0.94	93	1.5	93	0.163	101	100	1.2	0	458	338	402	395	401	399	727	257	81	71	81	71	82	-0.041	7.78	0.12
245	39.321	39.310	0.16	0.16	1.22	93	2.51	0.94	93	1.5	93	0.162	100	100	1.2	0	457	339	402	395	401	399	727	256	81	71	81	71	82	-0.041	7.81	0.12
246	39.481	39.471	0.16	0.16	1.22	93	2.51	0.94	93	1.5	93	0.164	99	100	1.2	0	457	340	402	395	400	399	727	256	81	71	81	71	82	-0.041	7.8	0.12
247	39.642	39.632	0.16	0.16	1.22	93	2.51	0.94	93	1.5	93	0.163	100	100	1.2	0	456	341	402	394	400	399	726	256	81	71	81	71	82	-0.041	7.84	0.11
248	39.802	39.792	0.16	0.16	1.22	93	2.51	0.94	93	1.5	93	0.162	100	100	1.1	-0.1	455	342	402	394	400	399	726	255	81	71	81	71	82	-0.040	7.84	0.12
249	39.963	39.952	0.16	0.16	1.22	93	2.5	0.94	93	1.5	93	0.166	99	98	1.1	0	455	343	403	394	399	399	725	255	81	71	81	71	82	-0.041	7.78	0.11
250	40.124	40.114	0.16	0.16	1.21	93	2.51	0.94	93	1.5	93	0.164	100	100	1.1	0	454	344	403	393	399	399	725	255	81	71	81	71	82	-0.041	7.81	0.11
251	40.284	40.273	0.16	0.16	1.22	93	2.51	0.94	93	1.5	93	0.164	99	98	1.1	0	453	344	403	393	398	398	724	255	81	71	81	71	82	-0.040	7.83	0.11
252	40.444	40.434	0.16	0.16	1.22	93	2.51	0.94	93	1.5	93	0.162	100	100	1.1	0	453	345	404	392	398	398	723	255	81	71	81	71	82	-0.041	7.82	0.12
253	40.605	40.595	0.16	0.16	1.22	93	2.51	0.94	93	1.5	93	0.165	99	99	1.1	0	452	346	404	392	398	398	722	254	81	71	81	71	82	-0.040	7.82	0.12
254	40.766	40.755	0.16	0.16	1.22	93	2.51	0.93	93	1.5	93	0.162	100	100	1.1	0	452	345	404	392	397	398	722	254	81	71	81	71	82	-0.041	7.8	0.12
255	40.927	40.915	0.16	0.16	1.22	93	2.51	0.94	93	1.5	93	0.164	100	99	1.1	0	451	346	404	391	397	398	723	255	81	71	81	71	82	-0.041	7.78	0.13
256	41.087	41.076	0.16	0.16	1.22	93	2.51	0.94	93	1.5	93	0.163	99	100	1.1	0	452	347	405	391	396	398	725	256	81	71	81	71	82	-0.040	7.7	0.14
257	41.247	41.237	0.16	0.16	1.22	93	2.51	0.94	93	1.5	93	0.163	99	100	1.0	-0.1	452	347	405	390	396	398	727	255	81	71	81	71	82	-0.041	7.65	0.15
258	41.407	41.397	0.16	0.16	1.22	93	2.51	0.94	93	1.5	93	0.164	99	99	1.0	0	453	348	404	390	395	398	728	256	81	71	81	71	82	-0.041	7.59	0.15
259	41.568	41.558	0.16	0.16	1.22	93	2.5	0.94	93	1.5	93	0.164	100	100	1.0	0	453	349	404	389	395	398	729	256	81	71	81	72	82	-0.041	7.54	0.14
260	41.730	41.719	0.16	0.16	1.22	93	2.51	0.94	93	1.5	93	0.163	101	100	1.0	0	453	349	404	388	394	398	729	257	81	71	81	72	82	-0.041	7.37	0.14

Wood Heater Test Data

u

Run: 8

Manufacturer: Kuma Stoves
Model: K-251
Tracking No.: 2464
Project No.: 0123WM014E
Test Date: 16-May-23
Beginning Clock Time: 11:58

Total Sampling Time: 329 min
Recording Interval: 1 min
Tunnel Diameter: 6
Background Sample Volume: 49.001 cubic feet

PM Control Modules: 335,336
Dilution Tunnel MW(dry): 29.00 lb/lb-mole
Dilution Tunnel MW(wet): 28.78 lb/lb-mole
Dilution Tunnel H2O: 2.00 percent
Dilution Tunnel Static: -0.480 "H2O
Tunnel Area: 0.19635 ft2
Pitot Tube Cp: 0.99

Avg. Tunnel Velocity: 24.60 ft/sec.
Initial Tunnel Flow: 273.0 scfm
Average Tunnel Flow: 270.9 scfm
Post-Test Leak Check (1st Hr): 0.000 cfm @ 11 in. Hg
Post-Test Leak Check (1): 0.000 cfm @ 11 in. Hg
Post-Test Leak Check (2): 0.000 cfm @ 10 in. Hg
Average Test Piece Fuel Moisture: 20.05 Dry Basis %

Technician Signature:_____

Meter Box Y Factor: 1.007 (1) 1.015 (2) 1.012 (Amb)

Barometric Pressure:

Begin	Middle	End	Average
30.12	30.06	30.01	30.06

Room Air Velocity, fpn
<50

OMNI Equipment Numbers: _____

Export to PDF

Velocity Traverse Data

	Pt.1	Pt.2	Pt.3	Pt.4	Pt.5	Pt.6	Pt.7	Pt.8	Center	
Initial dP	0.120	0.148	0.148	0.110	0.110	0.144	0.154	0.138	0.166	"H2O
Temp:	95	95	95	96	96	96	96	96	96	°F

V_{strav} 24.77 ft/sec V_{scent} 27.63 ft/sec F_p 0.896

qwq

	Particulate Sampling Data														Fuel Weight (lb)		Temperature Data (°F)													Stack Gas Data		
Elapsed Time (min)	Gas Meter 1 (ft^3)	Gas Meter 2 (ft^3)	Sample Rate 1 (cfm)	Sample Rate 2 (cfm)	Orifice dH 1 ("H_2O)	Meter 1 Temp (°F)	Meter 1 Vacuum ("Hg)	Orifice dH 2 ("H_2O)	Meter 2 Temp (°F)	Meter 2 Vacuum ("Hg)	Dilution Tunnel (°F)	Dilution Tunnel Center dP	Pro. Rate 1	Pro. Rate 2	Scale Reading	Weight Change	Firebox Top	Firebox Bottom	Firebox Back	Firebox Left	Firebox Right	Avg. Stove Surface (Tot = ΔT)	Catalyst Exit	Stack	Filter 1	Dryer Exit 1	Filter 2	Dryer Exit 2	Ambient	Draft ("H_2O)	CO_2 (%)	CO (%)
261	41.890	41.879	0.16	0.16	1.21	93	2.5	0.94	93	1.5	93	0.162	100	100	1.0	0	453	350	404	388	394	398	728	257	81	71	81	72	82	-0.041	7.33	0.14
262	42.050	42.039	0.16	0.16	1.22	93	2.51	0.94	93	1.5	93	0.164	99	99	1.0	0	453	350	403	387	393	397	727	256	81	71	81	72	82	-0.041	7.24	0.13
263	42.210	42.200	0.16	0.16	1.22	93	2.51	0.93	93	1.5	93	0.162	100	100	1.0	0	452	350	403	387	393	397	725	256	81	72	81	72	82	-0.041	7.26	0.14
264	42.371	42.360	0.16	0.16	1.22	93	2.51	0.94	93	1.5	93	0.162	100	100	0.9	-0.1	452	350	403	386	392	397	723	256	81	72	81	72	82	-0.041	7.29	0.13
265	42.532	42.521	0.16	0.16	1.22	93	2.51	0.94	93	1.5	93	0.164	100	100	0.9	0	451	350	402	386	392	396	721	256	81	72	81	72	82	-0.040	7.28	0.13
266	42.692	42.682	0.16	0.16	1.21	93	2.5	0.94	93	1.5	93	0.161	100	101	0.9	0	451	350	402	385	391	396	719	255	81	72	81	72	82	-0.041	7.36	0.13
267	42.852	42.842	0.16	0.16	1.21	93	2.5	0.93	93	1.5	93	0.163	99	99	0.9	0	450	350	401	385	391	395	718	255	81	72	81	72	82	-0.041	7.43	0.13
268	43.013	43.002	0.16	0.16	1.22	93	2.5	0.94	93	1.5	93	0.163	100	99	0.9	0	449	350	401	384	390	395	716	255	81	72	81	72	82	-0.040	7.54	0.13
269	43.173	43.163	0.16	0.16	1.22	93	2.5	0.94	93	1.5	92	0.161	100	100	0.9	0	449	350	401	384	389	395	715	255	81	72	81	72	82	-0.041	7.53	0.13
270	43.334	43.324	0.16	0.16	1.22	93	2.5	0.94	93	1.5	93	0.162	100	100	0.8	-0.1	448	350	400	383	389	394	714	255	81	72	81	72	82	-0.040	7.5	0.13
271	43.495	43.483	0.16	0.16	1.21	93	2.51	0.93	93	1.5	93	0.163	100	99	0.8	0	447	350	400	383	388	394	713	254	81	72	81	72	82	-0.040	7.52	0.12
272	43.655	43.644	0.16	0.16	1.22	93	2.51	0.94	93	1.5	93	0.163	99	100	0.8	0	447	350	400	383	387	393	711	253	81	72	81	72	82	-0.040	7.54	0.12
273	43.815	43.805	0.16	0.16	1.22	93	2.51	0.93	93	1.5	93	0.163	99	100	0.8	0	446	350	399	383	387	393	710	253	81	72	81	72	82	-0.040	7.56	0.12
274	43.975	43.965	0.16	0.16	1.22	93	2.5	0.94	93	1.5	93	0.163	99	99	0.8	0	446	350	399	382	386	393	709	254	81	72	81	72	82	-0.040	7.52	0.12
275	44.137	44.125	0.16	0.16	1.22	93	2.5	0.94	93	1.5	92	0.163	100	99	0.8	0	445	350	399	382	386	392	708	253	81	72	81	72	82	-0.040	7.55	0.12
276	44.297	44.287	0.16	0.16	1.21	93	2.51	0.94	93	1.5	92	0.163	99	100	0.8	0	444	350	399	382	385	392	708	252	81	72	81	72	82	-0.040	7.46	0.12
277	44.457	44.446	0.16	0.16	1.21	93	2.5	0.94	93	1.5	93	0.164	99	98	0.8	0	444	350	398	382	385	392	707	252	81	72	81	72	82	-0.040	7.48	0.12
278	44.617	44.607	0.16	0.16	1.22	93	2.51	0.94	93	1.5	93	0.163	99	100	0.7	-0.1	443	350	398	382	384	391	706	252	81	72	81	72	82	-0.040	7.54	0.12
279	44.778	44.768	0.16	0.16	1.22	93	2.51	0.94	93	1.5	93	0.164	100	100	0.7	0	442	350	398	382	384	391	705	251	81	72	81	72	82	-0.040	7.52	0.12
280	44.939	44.928	0.16	0.16	1.22	93	2.5	0.93	93	1.5	93	0.164	100	99	0.7	0	442	350	398	382	383	391	704	251	81	72	81	72	82	-0.040	7.55	0.12
281	45.099	45.088	0.16	0.16	1.21	93	2.51	0.94	93	1.5	93	0.164	99	99	0.7	0	441	350	398	382	383	391	704	251	81	72	81	72	82	-0.040	7.51	0.12
282	45.259	45.248	0.16	0.16	1.21	93	2.51	0.94	93	1.5	93	0.163	99	99	0.7	0	441	349	398	382	382	390	703	250	81	72	81	72	82	-0.040	7.52	0.12
283	45.420	45.409	0.16	0.16	1.22	93	2.51	0.93	93	1.5	93	0.161	101	101	0.7	0	440	350	398	382	382	390	703	251	81	72	81	72	82	-0.041	7.56	0.12
284	45.580	45.569	0.16	0.16	1.21	93	2.51	0.93	93	1.5	93	0.162	100	100	0.7	0	440	350	398	382	381	390	703	251	81	72	81	72	82	-0.040	7.52	0.12
285	45.742	45.729	0.16	0.16	1.22	93	2.51	0.94	93	1.5	92	0.163	100	99	0.6	-0.1	440	350	398	382	381	390	702	251	81	72	81	73	82	-0.040	7.6	0.11
286	45.902	45.891	0.16	0.16	1.21	93	2.51	0.93	93	1.5	92	0.161	100	101	0.6	0	439	350	398	382	380	390	703	251	81	72	81	73	82	-0.040	7.84	0.12
287	46.062	46.051	0.16	0.16	1.21	93	2.51	0.94	93	1.5	93	0.164	99	99	0.6	0	439	350	398	382	380	390	704	251	81	72	81	73	82	-0.040	7.91	0.13
288	46.222	46.211	0.16	0.16	1.21	93	2.51	0.93	93	1.5	93	0.162	100	100	0.6	0	439	350	398	382	380	390	706	250	81	73	81	73	82	-0.040	7.85	0.12
289	46.382	46.372	0.16	0.16	1.22	93	2.51	0.94	93	1.5	93	0.163	99	100	0.6	0	440	350	398	382	379	390	707	250	81	73	81	73	82	-0.040	7.82	0.12
290	46.544	46.532	0.16	0.16	1.22	93	2.51	0.93	93	1.5	93	0.165	100	99	0.6	0	440	350	398	382	379	390	708	251	81	73	81	73	82	-0.040	7.72	0.12
291	46.704	46.692	0.16	0.16	1.22	93	2.51	0.94	93	1.5	93	0.164	99	99	0.6	0	440	351	398	382	379	390	710	251	81	73	81	73	82	-0.040	7.77	0.12
292	46.864	46.853	0.16	0.16	1.21	93	2.51	0.93	93	1.5	93	0.163	99	100	0.6	0	440	351	398	382	378	390	710	251	81	73	81	73	82	-0.040	7.77	0.12
293	47.024	47.014	0.16	0.16	1.21	93	2.51	0.93	93	1.5	92	0.164	99	100	0.5	-0.1	440	351	398	382	378	390	711	251	81	73	81	73	82	-0.040	7.72	0.12
294	47.185	47.173	0.16	0.16	1.22	93	2.51	0.94	93	1.5	92	0.162	100	99	0.5	0	440	352	398	382	378	390	712	252	81	73	81	73	82	-0.040	7.71	0.12
295	47.346	47.334	0.16	0.16	1.21	93	2.51	0.94	93	1.5	92	0.163	100	100	0.5	0	440	352	398	382	377	390	712	251	81	73	81	73	82	-0.040	7.76	0.12
296	47.507	47.495	0.16	0.16	1.22	93	2.51	0.93	93	1.5	92	0.165	99	99	0.5	0	440	352	398	382	377	390	713	251	81	73	81	73	82	-0.040	7.71	0.12
297	47.666	47.655	0.16	0.16	1.21	93	2.51	0.93	93	1.5	92	0.163	99	99	0.5	0	441	352	398	382	377	390	713	252	81	73	81	73	82	-0.040	7.71	0.12
298	47.827	47.815	0.16	0.16	1.21	93	2.51	0.94	93	1.5	92	0.162	100	100	0.5	0	441	352	398	382	377	390	714	252	81	73	81	73	82	-0.041	7.76	0.12
299	47.987	47.976	0.16	0.16	1.22	93	2.51	0.94	93	1.5	92	0.162	99	100	0.5	0	441	353	397	382	377	390	715	252	81	73	81	73	82	-0.040	7.69	0.12
300	48.148	48.136	0.16	0.16	1.21	93	2.52	0.94	93	1.5	92	0.164	99	99	0.4	-0.1	442	353	397	382	376	390	715	252	81	73	81	73	82	-0.040	7.67	0.12
301	48.309	48.296	0.16	0.16	1.21	93	2.51	0.94	93	1.5	92	0.163	100	99	0.4	0	442	353	397	382	376	390	716	252	81	73	81	73	82	-0.040	7.72	0.12
302	48.469	48.458	0.16	0.16	1.21	93	2.52	0.94	93	1.5	92	0.165	99	100	0.4	0	442	354	397	382	376	390	716	252	81	73	81	73	82	-0.040	7.68	0.12
303	48.629	48.618	0.16	0.16	1.21	93	2.5	0.94	93	1.5	92	0.164	99	99	0.4	0	442	354	397	382	376	390	716	252	81	73	81	73	82	-0.040	7.63	0.12
304	48.790	48.778	0.16	0.16	1.22	93	2.51	0.94	93	1.5	92	0.164	99	99	0.4	0	443	354	397	382	376	390	716	252	81	73	81	73	82	-0.040	7.72	0.12

Wood Heater Test Data

u

Run: 8

Manufacturer: Kuma Stoves
Model: K-251
Tracking No.: 2464
Project No.: 0123WM014E
Test Date: 16-May-23
Beginning Clock Time: 11:58

Total Sampling Time: 329 min
Recording Interval: 1 min
Tunnel Diameter: 6
Background Sample Volume: 49.001 cubic feet

PM Control Modules: 335,336
Dilution Tunnel MW(dry): 29.00 lb/lb-mole
Dilution Tunnel MW(wet): 28.78 lb/lb-mole
Dilution Tunnel H2O: 2.00 percent
Dilution Tunnel Static: -0.480 "H2O
Tunnel Area: 0.19635 ft2
Pitot Tube Cp: 0.99

Avg. Tunnel Velocity: 24.60 ft/sec.
Initial Tunnel Flow: 273.0 scfm
Average Tunnel Flow: 270.9 scfm
Post-Test Leak Check (1st Hr): 0.000 cfm @ 11 in. Hg
Post-Test Leak Check (1): 0.000 cfm @ 11 in. Hg
Post-Test Leak Check (2): 0.000 cfm @ 10 in. Hg
Average Test Piece Fuel Moisture: 20.05 Dry Basis %

Technician Signature:_____

Meter Box Y Factor: 1.007 (1) 1.015 (2) 1.012 (Amb)

Export to PDF

Barometric Pressure:	Begin	Middle	End	Average
	30.12	30.06	30.01	30.06

Room Air Velocity, fpn
<50

OMNI Equipment Numbers: _____

Velocity Traverse Data

	Pt.1	Pt.2	Pt.3	Pt.4	Pt.5	Pt.6	Pt.7	Pt.8	Center	
Initial dP	0.120	0.148	0.148	0.110	0.110	0.144	0.154	0.138	0.166	"H2O
Temp:	95	95	95	96	96	96	96	96	96	°F

V_{strav} 24.77 ft/sec V_{scent} 27.63 ft/sec F_p 0.896

qwq

	Particulate Sampling Data														Fuel Weight (lb)		Temperature Data (°F)													Stack Gas Data		
Elapsed Time (min)	Gas Meter 1 (ft^3)	Gas Meter 2 (ft^3)	Sample Rate 1 (cfm)	Sample Rate 2 (cfm)	Orifice dH 1 ("H_2O)	Meter 1 Temp (°F)	Meter 1 Vacuum ("Hg)	Orifice dH 2 ("H_2O)	Meter 2 Temp (°F)	Meter 2 Vacuum ("Hg)	Dilution Tunnel (°F)	Dilution Tunnel Center dP	Pro. Rate 1	Pro. Rate 2	Scale Reading	Weight Change	Firebox Top	Firebox Bottom	Firebox Back	Firebox Left	Firebox Right	Avg. Stove Surface (Tot = ΔT)	Catalyst Exit	Stack	Filter 1	Dryer Exit 1	Filter 2	Dryer Exit 2	Ambient	Draft ("H_2O)	CO_2 (%)	CO (%)
305	48.951	48.940	0.16	0.16	1.20	93	2.52	0.93	93	1.5	92	0.163	100	100	0.4	0	443	355	397	382	376	391	717	252	81	73	81	73	82	-0.040	7.76	0.12
306	49.111	49.100	0.16	0.16	1.22	93	2.51	0.93	93	1.5	92	0.165	99	99	0.4	0	443	355	397	381	376	390	717	251	81	73	81	74	82	-0.040	7.79	0.13
307	49.272	49.260	0.16	0.16	1.21	93	2.51	0.94	93	1.5	93	0.163	100	99	0.4	0	443	355	397	381	375	390	718	252	81	73	81	74	82	-0.040	7.72	0.13
308	49.432	49.421	0.16	0.16	1.21	93	2.51	0.94	93	1.5	93	0.164	99	100	0.4	0	444	356	397	381	375	391	718	252	81	73	81	74	82	-0.040	7.69	0.13
309	49.592	49.582	0.16	0.16	1.22	93	2.52	0.93	93	1.5	93	0.161	100	101	0.3	-0.1	444	356	397	381	375	391	718	252	81	73	81	74	83	-0.040	7.67	0.13
310	49.753	49.742	0.16	0.16	1.22	93	2.5	0.94	93	1.5	93	0.163	100	99	0.3	0	444	356	397	381	375	391	719	253	81	73	81	74	83	-0.040	7.65	0.13
311	49.914	49.902	0.16	0.16	1.21	93	2.52	0.94	93	1.5	93	0.163	100	99	0.3	0	445	356	397	381	375	391	719	253	81	73	81	74	83	-0.040	7.61	0.13
312	50.075	50.063	0.16	0.16	1.21	93	2.51	0.93	93	1.5	93	0.162	100	100	0.3	0	445	356	397	381	375	391	719	253	81	73	81	74	82	-0.040	7.54	0.13
313	50.235	50.223	0.16	0.16	1.21	93	2.51	0.94	93	1.5	93	0.164	99	99	0.3	0	445	357	397	380	375	391	718	253	81	73	81	74	83	-0.040	7.5	0.13
314	50.395	50.384	0.16	0.16	1.22	93	2.51	0.93	93	1.5	93	0.163	99	100	0.3	0	445	357	397	380	375	391	718	253	81	73	81	74	83	-0.040	7.48	0.13
315	50.555	50.545	0.16	0.16	1.22	93	2.51	0.94	93	1.5	93	0.162	100	100	0.3	0	446	357	397	380	375	391	718	253	81	73	81	74	83	-0.040	7.48	0.13
316	50.717	50.704	0.16	0.16	1.21	93	2.51	0.93	93	1.5	93	0.160	101	100	0.2	-0.1	446	357	397	380	375	391	718	253	81	73	81	74	83	-0.040	7.5	0.13
317	50.877	50.865	0.16	0.16	1.21	93	2.51	0.94	93	1.5	93	0.162	100	100	0.2	0	446	357	397	379	375	391	718	253	81	73	81	74	83	-0.040	7.46	0.13
318	51.037	51.026	0.16	0.16	1.21	93	2.51	0.93	93	1.5	93	0.163	99	100	0.2	0	446	358	397	379	375	391	717	253	81	73	81	74	82	-0.040	7.41	0.13
319	51.197	51.186	0.16	0.16	1.21	93	2.51	0.93	93	1.5	93	0.163	99	99	0.2	0	446	358	397	379	374	391	716	254	81	73	81	74	82	-0.041	7.35	0.13
320	51.358	51.346	0.16	0.16	1.22	93	2.51	0.94	93	1.5	92	0.162	100	100	0.2	0	446	358	396	379	374	391	715	253	81	73	81	74	82	-0.041	7.37	0.13
321	51.519	51.507	0.16	0.16	1.21	93	2.51	0.93	93	1.5	92	0.163	100	100	0.2	0	445	358	396	378	374	390	714	253	81	73	81	74	82	-0.041	7.35	0.13
322	51.679	51.668	0.16	0.16	1.21	93	2.51	0.93	93	1.5	92	0.161	100	100	0.2	0	445	358	396	378	374	390	713	253	81	73	81	74	83	-0.040	7.39	0.12
323	51.839	51.828	0.16	0.16	1.21	93	2.51	0.93	93	1.5	92	0.164	99	99	0.2	0	445	358	396	378	374	390	712	253	81	74	81	74	83	-0.040	7.28	0.13
324	51.999	51.988	0.16	0.16	1.21	93	2.52	0.94	93	1.5	93	0.163	99	99	0.1	-0.1	444	359	396	378	374	390	710	252	81	74	81	74	82	-0.041	7.41	0.13
325	52.160	52.149	0.16	0.16	1.22	93	2.51	0.93	93	1.5	92	0.164	99	100	0.1	0	444	359	396	377	374	390	709	252	81	74	81	74	82	-0.041	7.45	0.13
326	52.322	52.309	0.16	0.16	1.22	93	2.51	0.93	93	1.5	93	0.164	100	99	0.1	0	443	359	396	377	373	390	709	252	81	74	81	74	82	-0.040	7.48	0.13
327	52.482	52.470	0.16	0.16	1.21	93	2.51	0.94	93	1.5	93	0.164	99	100	0.1	0	443	359	397	377	373	390	708	252	81	74	81	74	82	-0.040	7.43	0.13
328	52.642	52.631	0.16	0.16	1.22	93	2.51	0.94	93	1.5	93	0.163	99	100	0.1	0	443	359	397	376	373	390	708	252	81	74	81	74	82	-0.040	7.39	0.13
329	52.802	52.791	0.16	0.16	1.21	93	2.51	0.93	93	1.5	92	0.162	99	100	0.0	-0.1	443	359	397	376	373	390	707	252	81	74	81	74	82	-0.041	7.39	0.13

Wood Heater Lab Data - ASTM E2780 / ASTM E2515

Manufacturer: Kuma Stoves
Model: K-251
Tracking No.: 2464
Project No.: 0123WM014E
Run #: 8
Date: 5/16/23

Equipment Numbers:

TRAIN 1 (First Hour emissions)

Sample Component	Reagent	Filter, Probe or Dish #	Weights		
			Final, mg	Tare, mg	Particulate, mg
B. Front filter catch	Filter	E953	118.4	117.0	1.4
C. Rear filter catch	Filter	E954	116.8	117.1	-0.3
D. Probe catch*	Probe	OES4	114148.1	114148.0	0.1
E. Filter seals catch*	Seals	S501	3416.6	3416.5	0.1

Sub-Total Total Particulate, mg: 1.3

TRAIN 1 (Post First Hour Change-out)

Sample Component	Reagent	Filter, Probe or Dish #	Weights		
			Final, mg	Tare, mg	Particulate, mg
B. Front filter catch	Filter	E955	118.1	118.2	-0.1
C. Rear filter catch	Filter	E956	116.0	116.4	-0.4
D. Probe catch*	Probe	22	114340.9	114340.7	0.2
E. Filter seals catch*	Seals	S504	3366.0	3365.3	0.7

Sub-Total Total Particulate, mg: 0.4

Train 1 Aggregate Total Particulate, mg: **1.7**

TRAIN 2

Sample Component	Reagent	Filter, Probe or Dish #	Weights		
			Final, mg	Tare, mg	Particulate, mg
A. Front filter catch	Filter	E957	119.5	117.4	2.1
B. Rear filter catch	Filter	E958	116.6	117.1	-0.5
C. Probe catch*	Probe	72	115950.1	115950.0	0.1
D. Filter seals catch*	Seals	S487	4123.5	4123.0	0.5

Total Particulate, mg: **2.2**

AMBIENT

Sample Component	Reagent	Filter # or Probe #	Weights		
			Final, mg	Tare, mg	Particulate, mg
A. Front filter catch*	Filter	E959	117.9	117.9	0.0

Total Particulate, mg: **0.0**

*Particulate catch that results in a negative number, is assumed to be zero for probes and seals, negative numbers for filters are assumed to be part of the seal weight.

Component	Equations:
A. Front filter catch	Final (mg) - Tare (mg) = Particulate, mg
B. Rear filter catch	Final (mg) - Tare (mg) = Particulate, mg
C. Probe catch	Final (mg) - Tare (mg) = Particulate, mg

Technician Signature:_____

Wood Heater Test Results - ASTM E2780 / ASTM E2515

Manufacturer: Kuma Stoves
Model: K-251
Project No.: 0123WM014E
Tracking No.: 2464
Run: 8
Test Date: 05/16/23

Technician Signature:_____

Burn Rate	**1.16**	**kg/hr dry**
Average Tunnel Temperature	96	degrees Fahrenheit
Average Gas Velocity in Dilution Tunnel - vs	24.60	feet/second
Average Gas Flow Rate in Dilution Tunnel - Qsd	16255.8	dscf/hour
Average Delta p	0.164	inches H20
Total Time of Test	329	minutes

	AMBIENT		SAMPLE TRAIN 1		SAMPLE TRAIN 2		FIRST HOUR FILTER (TRAIN 1)	
Total Sample Volume - Vm	49.001	cubic feet	52.802	cubic feet	52.791	cubic feet	9.586	cubic feet
Average Gas Meter Temperature	82	degrees Fahrenheit	91	degrees Fahrenheit	91	degrees Fahrenheit	85	degrees Fahrenheit
Total Sample Volume (Standard Conditions) - Vmstd	48.523	dscf	51.335	dscf	51.698	dscf	9.413	dscf
Total Particulates - m_n	0	mg	1.7	mg	2.2	mg	1.3	mg
Particulate Concentration (dry-standard) - C_r/C_s	0.000000	grams/dscf	0.00003	grams/dscf	0.00004	grams/dscf	0.00014	grams/dscf
Total Particulate Emissions - E_T	0.00	grams	2.95	grams	3.79	grams	2.25	grams
Particulate Emission Rate	0.00	grams/hour	0.54	grams/hour	0.69	grams/hour	2.25	grams/hour
Emissions Factor			0.47	g/kg	0.60	g/kg	0.86	g/kg
Difference from Average Total Particulate Emissions			0.42	grams	0.42	grams		

Final Average Results		
Complete Test Run		
Total Particulate Emissions - E_T	3.37	grams
Particulate Emission Rate	**0.62**	**grams/hour**
Emissions Factor	0.53	grams/kg
First Hour Emissions		
Total Particulate Emissions - E_T	2.25	grams
Particulate Emission Rate	2.25	grams/hour
Emissions Factor	0.86	grams/kg
7.5% of Average Total Particulate Emissions	0.25	grams

Quality Checks	Requirement	Measured / Observed: First Hour	Train 1	Train 2	Complies?
Filter Temps, °F	< 90	83	83	81	OK
Filter Face Velocity, fpm	< 30	8.68	8.68	8.68	OK
Dryer Exit Temp, °F	< 80	75	76	75	OK
Leakage Rate, cfm < 4% of avg sample rate or < 0.01 cfm, lesser of the two	0.01	0.000	0.000	0.000	OK
Neg. Probe Weight	=> 0	0.1	0.2	0.1	OK
Pro-Rate Variation	< 90 for < 10% of θ	0.00%	0.00%	0.00%	OK
	> 110 for < 10% of θ	0.00%	0.00%	0.00%	OK
	# Readings < 80%	0	0	0	OK
	# Readings > 120%	0	0	0	OK
Ambient Temp, °F (min / max)	< 55	80			OK
	> 90	83			OK
Train Precision	(*A*) Within 7.5%	12.5%			OK
One of *A* or *B* must	(*B*) Within 0.5 g/kg	0.13			
Stove Surface ΔT	Within 125 °F	54			OK
Room Air Velocity	< 50 fpm	<50			OK

Wood Heater Lab Data - ASTM E2780 / ASTM E2515

Manufacturer: Kuma Stoves
Model: K-251
Tracking No.: 2464
Project No.: 0123WM014E
Run #: 8
Date: 5/16/23

Equipment Numbers:

Uncorrected

TRAIN 1 (First Hour emissions)

Sample Component	Reagent	Filter, Probe or Dish #	Weights		
			Final, mg	Tare, mg	Particulate, mg
B. Front filter catch	Filter	E953	118.4	117.0	1.4
C. Rear filter catch	Filter	E954	116.8	117.1	0.0
D. Probe catch*	Probe	OES4	114148.1	114148.0	0.1
E. Filter seals catch*	Seals	S501	3416.6	3416.5	0.1

Sub-Total Total Particulate, mg: 1.6

TRAIN 1 (Post First Hour Change-out)

Sample Component	Reagent	Filter, Probe or Dish #	Weights		
			Final, mg	Tare, mg	Particulate, mg
B. Front filter catch	Filter	E955	118.1	118.2	0.0
C. Rear filter catch	Filter	E956	116.0	116.4	0.0
D. Probe catch*	Probe	22	114340.9	114340.7	0.2
E. Filter seals catch*	Seals	S504	3366.0	3365.3	0.7

Sub-Total Total Particulate, mg: 0.9

Train 1 Aggregate Total Particulate, mg: **2.5**

TRAIN 2

Sample Component	Reagent	Filter, Probe or Dish #	Weights		
			Final, mg	Tare, mg	Particulate, mg
A. Front filter catch	Filter	E957	119.5	117.4	2.1
B. Rear filter catch	Filter	E958	116.6	117.1	0.0
C. Probe catch*	Probe	72	115950.1	115950.0	0.1
D. Filter seals catch*	Seals	S487	4123.5	4123.0	0.5

Total Particulate, mg: **2.7**

AMBIENT

Sample Component	Reagent	Filter # or Probe #	Weights		
			Final, mg	Tare, mg	Particulate, mg
A. Front filter catch*	Filter	E959	117.9	117.9	0.0

Total Particulate, mg: **0.0**

*Particulate catch that results in a negative number, is assumed to be zero for probes and seals, negative numbers for filters are assumed to be part of the seal weight.

Component	Equations:
A. Front filter catch	Final (mg) - Tare (mg) = Particulate, mg
B. Rear filter catch	Final (mg) - Tare (mg) = Particulate, mg
C. Probe catch	Final (mg) - Tare (mg) = Particulate, mg

Technician Signature:_____

Wood Heater Test Results - ASTM E2780 / ASTM E2515

Manufacturer: Kuma Stoves
Model: K-251
Project No.: 0123WM014E
Tracking No.: 2464
Run: 8
Test Date: 05/16/23

Technician Signature:_____

Burn Rate	**1.16**	**kg/hr dry**
Average Tunnel Temperature	96	degrees Fahrenheit
Average Gas Velocity in Dilution Tunnel - vs	24.60	feet/second
Average Gas Flow Rate in Dilution Tunnel - Qsd	16255.8	dscf/hour
Average Delta p	0.164	inches H20
Total Time of Test	329	minutes

Uncorrected

	AMBIENT		SAMPLE TRAIN 1		SAMPLE TRAIN 2		FIRST HOUR FILTER (TRAIN 1)	
Total Sample Volume - Vm	49.001	cubic feet	52.802	cubic feet	52.791	cubic feet	9.586	cubic feet
Average Gas Meter Temperature	82	degrees Fahrenheit	91	degrees Fahrenheit	91	degrees Fahrenheit	85	degrees Fahrenheit
Total Sample Volume (Standard Conditions) - Vmstd	48.523	dscf	51.335	dscf	51.698	dscf	9.413	dscf
Total Particulates - m_n	0	mg	2.5	mg	2.7	mg	1.6	mg
Particulate Concentration (dry-standard) - C_r/C_s	0.000000	grams/dscf	0.00005	grams/dscf	0.00005	grams/dscf	0.00017	grams/dscf
Total Particulate Emissions - E_T	0.00	grams	4.34	grams	4.66	grams	2.76	grams
Particulate Emission Rate	0.00	grams/hour	0.79	grams/hour	0.85	grams/hour	2.76	grams/hour
Emissions Factor			0.68	g/kg	0.73	g/kg	1.06	g/kg
Difference from Average Total Particulate Emissions			0.16	grams	0.16	grams		

Final Average Results		
Complete Test Run		
Total Particulate Emissions - E_T	4.50	grams
Particulate Emission Rate	**0.82**	**grams/hour**
Emissions Factor	0.71	grams/kg
First Hour Emissions		
Total Particulate Emissions - E_T	2.76	grams
Particulate Emission Rate	2.76	grams/hour
Emissions Factor	1.06	grams/kg
7.5% of Average Total Particulate Emissions	0.34	grams

Quality Checks	Requirement	Measured / Observed: First Hour	Train 1	Train 2	Complies?
Filter Temps, °F	< 90	83	83	81	OK
Filter Face Velocity, fpm	< 30	8.68	8.68	8.68	OK
Dryer Exit Temp, °F	< 80	75	76	75	OK
Leakage Rate, cfm < 4% of avg sample rate or < 0.01 cfm, lesser of the two	0.01	0.000	0.000	0.000	OK
Neg. Probe Weight	=> 0	0.1	0.2	0.1	OK
Pro-Rate Variation	< 90 for < 10% of θ	0.00%	0.00%	0.00%	OK
	> 110 for < 10% of θ	0.00%	0.00%	0.00%	OK
	# Readings < 80%	0	0	0	OK
	# Readings > 120%	0	0	0	OK
Ambient Temp, °F (min / max)	< 55	80			OK
	> 90	83			OK
Train Precision One of *A* or *B* must	(*A*) Within 7.5%	3.5%			OK
	(*B*) Within 0.5 g/kg	0.05			
Stove Surface ΔT	Within 125 °F	54			OK
Room Air Velocity	< 50 fpm	<50			OK

VERSION:	2.4	4/15/2010	
Manufacturer:	Kuma Stoves		
Model:	K-251		
Date:	5/16/2023		
Run:	8		
Control #:	2464		
Test Duration:	329		
Output Category:	II		
Wood Moisture (% wet):	16.70		
Load Weight (lb wet):	16.80		
Burn Rate (dry kg/h):	1.16		
Total Particulate Emissions:	3.37	g	

Appliance Type: Cat (Cat, Non-Cat, Pellet)

Temp. Units	F	(F or C)
Weight Units	lb	(kg or lb)

Fuel Data

	D. Fir	
HHV	19,810	kJ/kg
%C	48.73	
%H	6.87	
%O	43.9	
%Ash	0.5	

Default Fuel Values

	D. Fir	Oak
HHV (kJ/kg)	19,810	19,887
%C	48.73	50
%H	6.87	6.6
%O	43.9	42.9
%Ash	0.5	0.5

Note 1: For other fuels, use the heating value and fuel composition determined by analysis of fuel sample in accordance with Clause 9.2.

Note 2: In cases where the "Fuel Weight Remaining" is the same for three or more readings in a row, a "divide by zero error" will occur in the calculation sheet. In such cases, adjust the weight values by interpolation between the first occurence and the next reading showing a decrease in weight.

	Averages	0.24	10.03	#DIV/0!	310.02	81.97
					Temp. (ºF)	
Elapsed Time (min)	Fuel Weight Remaining (lb)	Flue Gas Composition (%) CO	CO_2	O_2	Flue Gas	Room Temp
0	16.80	0.49	1.93		411.0	80.0
1	16.70	0.40	1.72		383.0	80.0
2	16.40	0.97	4.41		314.0	80.0
3	16.30	0.20	5.83		303.0	80.0
4	16.30	0.10	6.11		303.0	80.0
5	16.30	0.09	6.56		306.0	80.0
6	16.20	0.07	7.44		309.0	80.0
7	16.20	0.07	8.17		314.0	80.0
8	16.20	0.08	8.57		318.0	80.0
9	16.20	0.09	8.47		322.0	80.0
10	16.10	0.10	7.69		326.0	80.0
11	16.10	0.10	8.02		328.0	80.0
12	16.00	0.10	8.01		331.0	80.0
13	15.90	0.10	9.46		334.0	80.0
14	15.80	0.11	9.48		339.0	80.0
15	15.70	0.12	9.45		341.0	80.0
16	15.60	0.12	9.57		345.0	80.0
17	15.50	0.11	10.81		349.0	80.0
18	15.40	0.12	11.90		354.0	80.0

19	15.30	0.12	12.15		357.0	80.0
20	15.20	0.10	12.10		360.0	80.0
21	15.10	0.10	12.81		365.0	80.0
22	14.90	0.11	12.72		369.0	80.0
23	14.80	0.16	12.01		372.0	80.0
24	14.70	0.14	11.77		376.0	80.0
25	14.60	0.13	11.94		379.0	80.0
26	14.50	0.11	12.04		379.0	80.0
27	14.40	0.11	11.86		380.0	80.0
28	14.30	0.11	12.55		381.0	80.0
29	14.10	0.11	13.69		384.0	80.0
30	14.00	0.18	14.34		386.0	80.0
31	13.80	0.34	14.47		391.0	80.0
32	13.70	0.66	14.68		394.0	80.0
33	13.60	1.04	14.94		397.0	80.0
34	13.40	1.25	14.90		398.0	80.0
35	13.30	1.71	14.67		401.0	80.0
36	13.10	1.79	14.66		404.0	80.0
37	13.00	1.88	14.44		406.0	80.0
38	12.80	1.85	14.47		406.0	80.0
39	12.70	1.88	14.24		406.0	80.0
40	12.50	1.76	14.14		407.0	80.0
41	12.30	1.58	14.16		405.0	80.0
42	12.20	1.48	14.16		404.0	80.0
43	12.10	1.39	14.27		403.0	80.0
44	11.90	1.32	14.22		402.0	80.0
45	11.70	1.32	14.33		402.0	80.0
46	11.70	1.52	14.23		404.0	81.0
47	11.50	1.58	14.29		405.0	81.0
48	11.40	1.46	14.50		404.0	81.0
49	11.20	1.48	14.55		404	81
50	11.10	1.25	14.65		404	81
51	11.00	1.1	14.68		404	81
52	10.80	1.41	14.83		403	81
53	10.70	0.98	14.89		404	81
54	10.60	0.98	14.93		403	81
55	10.40	0.74	14.92		403	81
56	10.30	0.51	14.94		401	81
57	10.20	0.33	13.11		401	81

58	10.20	0.21	14.62		401	81
59	10.00	0.16	14.48		399	81
60	9.90	0.14	14.4		399	81
61	9.80	0.15	14.49		398	81
62	9.60	0.27	14.83		398	81
63	9.50	0.26	14.82		396	82
64	9.30	0.29	14.97		396	82
65	9.20	0.28	14.98		396	81
66	9.10	0.34	15		395	81
67	9.00	0.24	15.2		396	81
68	8.90	0.42	15.35		398	82
69	8.80	0.48	15.45		398	82
70	8.70	0.74	15.52		399	81
71	8.60	0.9	15.53		401	81
72	8.40	0.9	15.47		400	81
73	8.30	0.77	15.38		400	81
74	8.20	0.89	15.33		399	82
75	8.10	0.72	15.14		399	82
76	8.00	0.74	15.18		398	82
77	7.90	0.6	15.24		398	82
78	7.70	0.48	15.1		397	82
79	7.60	0.37	15.02		396	82
80	7.50	0.31	14.86		395	82
81	7.40	0.23	14.65		394	82
82	7.30	0.2	14.59		392	82
83	7.20	0.17	14.62		391	82
84	7.10	0.17	14.47		391	82
85	7.00	0.18	14.42		391	82
86	6.90	0.11	14.33		389	82
87	6.80	0.11	14.11		387	81
88	6.70	0.09	13.74		385	82
89	6.60	0.09	13.35		382	82
90	6.50	0.08	12.87		380	82
91	6.40	0.09	12.82		377	82
92	6.30	0.08	12.59		376	82
93	6.10	0.07	12.46		372	82
94	6.10	0.07	12.11		369	82
95	6.10	0.08	12.1		366	82
96	6.00	0.09	11.83		362	82

97	5.90	0.09	11.72		360	82
98	5.80	0.09	11.68		358	82
99	5.80	0.09	11.67		356	82
100	5.70	0.09	11.78		353	82
101	5.60	0.09	11.74		352	82
102	5.50	0.09	11.81		351	82
103	5.50	0.09	11.7		349	83
104	5.40	0.09	11.76		347	83
105	5.30	0.1	11.81		346	83
106	5.30	0.1	11.74		345	83
107	5.20	0.09	11.79		343	83
108	5.10	0.08	11.94		343	83
109	5.10	0.09	11.85		343	83
110	5.00	0.09	12.15		340	83
111	4.90	0.09	12.26		340	83
112	4.90	0.09	12.24		339	83
113	4.80	0.09	12.41		338	83
114	4.80	0.09	12.28		338	83
115	4.70	0.09	12.41		337	83
116	4.60	0.09	12.2		336	83
117	4.60	0.09	12.31		334	83
118	4.50	0.09	12.24		334	83
119	4.40	0.09	12.06		333	82
120	4.40	0.09	12.01		333	82
121	4.40	0.09	12		332	83
122	4.30	0.09	11.92		332	83
123	4.20	0.08	11.91		331	82
124	4.20	0.09	11.76		330	82
125	4.10	0.09	11.72		329	82
126	4.10	0.09	11.85		328	83
127	4.00	0.09	11.74		327	83
128	4.00	0.09	11.72		326	83
129	4.00	0.09	11.51		326	83
130	3.90	0.1	11.5		325	83
131	3.90	0.09	11.53		325	83
132	3.80	0.1	11.38		324	83
133	3.70	0.09	11.28		324	83
134	3.70	0.09	11.12		323	83
135	3.70	0.09	11.02		322	82

136	3.60	0.1	10.93		321	83
137	3.60	0.1	10.84		320	83
138	3.50	0.09	10.79		319	83
139	3.50	0.09	10.77		318	82
140	3.40	0.09	10.65		317	83
141	3.40	0.09	10.52		316	83
142	3.30	0.1	10.63		316	83
143	3.30	0.1	10.59		316	83
144	3.30	0.1	10.73		315	83
145	3.20	0.1	10.7		315	83
146	3.20	0.1	10.95		315	83
147	3.10	0.12	11.15		315	82
148	3.10	0.12	11.15		314	82
149	3.00	0.1	11.06		314	83
150	3.00	0.11	10.64		312	83
151	3.00	0.12	10.38		311	83
152	3.00	0.13	9.91		311	83
153	3.00	0.13	9.73		311	83
154	3.00	0.13	9.56		310	83
155	2.90	0.14	9.95		309	83
156	2.90	0.14	10		307	83
157	2.80	0.14	9.91		306	83
158	2.80	0.14	9.91		305	83
159	2.70	0.14	9.96		304	83
160	2.70	0.13	9.83		303	83
161	2.60	0.13	9.56		302	83
162	2.60	0.13	9.46		300	83
163	2.60	0.13	9.18		299	83
164	2.50	0.13	9.01		298	83
165	2.50	0.12	8.89		296	83
166	2.40	0.12	8.91		293	83
167	2.40	0.12	8.74		292	83
168	2.40	0.13	8.56		291	83
169	2.40	0.12	8.66		290	83
170	2.40	0.12	8.73		289	83
171	2.30	0.12	8.75		288	83
172	2.30	0.12	8.76		286	83
173	2.30	0.12	8.78		285	83
174	2.30	0.12	8.81		284	83

175	2.20	0.12	8.76		283	83
176	2.20	0.12	8.87		282	83
177	2.20	0.12	8.75		281	83
178	2.20	0.12	8.74		280	83
179	2.20	0.13	8.79		280	82
180	2.10	0.13	8.67		280	82
181	2.10	0.13	8.66		278	82
182	2.10	0.12	8.6		278	82
183	2.10	0.12	8.58		277	82
184	2.20	0.12	8.54		276	82
185	2.20	0.14	8.54		276	83
186	2.20	0.14	8.6		275	83
187	2.10	0.15	8.49		275	83
188	2.10	0.15	8.54		276	83
189	2.00	0.15	8.48		275	83
190	2.00	0.15	8.5		274	83
191	2.00	0.15	8.54		274	83
192	2.00	0.15	8.54		274	83
193	2.00	0.15	8.54		275	83
194	1.90	0.15	8.52		274	83
195	1.90	0.15	8.48		274	83
196	1.90	0.15	8.44		273	83
197	1.90	0.15	8.39		273	83
198	1.90	0.15	8.43		272	83
199	1.90	0.16	8.5		272	83
200	1.90	0.16	8.47		271	83
201	1.90	0.15	8.38		272	82
202	1.80	0.15	8.33		271	83
203	1.80	0.15	8.31		271	83
204	1.80	0.16	8.25		271	83
205	1.80	0.15	8.3		270	83
206	1.80	0.15	8.26		270	83
207	1.80	0.14	8.25		270	83
208	1.70	0.15	8.26		269	83
209	1.70	0.14	8.24		269	83
210	1.70	0.15	8.19		269	83
211	1.70	0.15	8.17		268	83
212	1.70	0.12	8.1		268	83
213	1.60	0.13	8.05		267	83

214	1.60	0.12	8.06		267	82
215	1.60	0.13	7.96		266	82
216	1.60	0.12	8.03		265	82
217	1.60	0.12	8.05		265	82
218	1.60	0.13	7.96		264	82
219	1.50	0.13	7.91		264	83
220	1.50	0.15	7.87		264	82
221	1.50	0.15	7.85		264	82
222	1.50	0.14	7.85		264	82
223	1.50	0.14	7.94		264	82
224	1.50	0.14	7.83		264	82
225	1.50	0.14	7.83		264	82
226	1.50	0.13	7.78		263	82
227	1.40	0.13	7.75		263	82
228	1.40	0.12	7.7		262	82
229	1.40	0.12	7.63		262	82
230	1.40	0.12	7.62		262	82
231	1.40	0.12	7.62		261	82
232	1.40	0.13	7.71		261	82
233	1.40	0.12	7.71		260	82
234	1.40	0.12	7.64		260	82
235	1.30	0.12	7.59		260	82
236	1.30	0.12	7.63		259	82
237	1.30	0.12	7.57		258	82
238	1.30	0.12	7.57		258	82
239	1.30	0.12	7.63		258	82
240	1.30	0.12	7.59		257	82
241	1.30	0.12	7.59		257	82
242	1.20	0.12	7.63		257	82
243	1.20	0.12	7.73		257	82
244	1.20	0.12	7.78		257	82
245	1.20	0.12	7.81		256	82
246	1.20	0.12	7.8		256	82
247	1.20	0.11	7.84		256	82
248	1.10	0.12	7.84		255	82
249	1.10	0.11	7.78		255	82
250	1.10	0.11	7.81		255	82
251	1.10	0.11	7.83		255	82
252	1.10	0.12	7.82		255	82

253	1.10	0.12	7.82		254	82
254	1.10	0.12	7.8		254	82
255	1.10	0.13	7.78		255	82
256	1.10	0.14	7.7		256	82
257	1.00	0.15	7.65		255	82
258	1.00	0.15	7.59		256	82
259	1.00	0.14	7.54		256	82
260	1.00	0.14	7.37		257	82
261	1.00	0.14	7.33		257	82
262	1.00	0.13	7.24		256	82
263	1.00	0.14	7.26		256	82
264	0.90	0.13	7.29		256	82
265	0.90	0.13	7.28		256	82
266	0.90	0.13	7.36		255	82
267	0.90	0.13	7.43		255	82
268	0.90	0.13	7.54		255	82
269	0.90	0.13	7.53		255	82
270	0.80	0.13	7.5		255	82
271	0.80	0.12	7.52		254	82
272	0.80	0.12	7.54		253	82
273	0.80	0.12	7.56		253	82
274	0.80	0.12	7.52		254	82
275	0.80	0.12	7.55		253	82
276	0.80	0.12	7.46		252	82
277	0.80	0.12	7.48		252	82
278	0.70	0.12	7.54		252	82
279	0.70	0.12	7.52		251	82
280	0.70	0.12	7.55		251	82
281	0.70	0.12	7.51		251	82
282	0.70	0.12	7.52		250	82
283	0.70	0.12	7.56		251	82
284	0.70	0.12	7.52		251	82
285	0.60	0.11	7.6		251	82
286	0.60	0.12	7.84		251	82
287	0.60	0.13	7.91		251	82
288	0.60	0.12	7.85		250	82
289	0.60	0.12	7.82		250	82
290	0.60	0.12	7.72		251	82
291	0.60	0.12	7.77		251	82

292	0.60	0.12	7.77		251	82
293	0.50	0.12	7.72		251	82
294	0.50	0.12	7.71		252	82
295	0.50	0.12	7.76		251	82
296	0.50	0.12	7.71		251	82
297	0.50	0.12	7.71		252	82
298	0.50	0.12	7.76		252	82
299	0.50	0.12	7.69		252	82
300	0.40	0.12	7.67		252	82
301	0.40	0.12	7.72		252	82
302	0.40	0.12	7.68		252	82
303	0.40	0.12	7.63		252	82
304	0.40	0.12	7.72		252	82
305	0.40	0.12	7.76		252	82
306	0.40	0.13	7.79		251	82
307	0.40	0.13	7.72		252	82
308	0.40	0.13	7.69		252	82
309	0.30	0.13	7.67		252	83
310	0.30	0.13	7.65		253	83
311	0.30	0.13	7.61		253	83
312	0.30	0.13	7.54		253	82
313	0.30	0.13	7.5		253	83
314	0.30	0.13	7.48		253	83
315	0.30	0.13	7.48		253	83
316	0.20	0.13	7.5		253	83
317	0.20	0.13	7.46		253	83
318	0.20	0.13	7.41		253	82
319	0.20	0.13	7.35		254	82
320	0.20	0.13	7.37		253	82
321	0.20	0.13	7.35		253	82
322	0.20	0.12	7.39		253	83
323	0.20	0.13	7.28		253	83
324	0.10	0.13	7.41		252	82
325	0.10	0.13	7.45		252	82
326	0.10	0.13	7.48		252	82
327	0.10	0.13	7.43		252	82
328	0.10	0.13	7.39		252	82
329	0.00	0.13	7.39		252	82

OMNI-Test Laboratories, Inc.

Manufacturer:	Kuma Stoves
Model:	K-251
Date:	05/16/23
Run:	8
Control #:	2464
Test Duration:	329
Output Category:	II

Technicians: _____

_____

_____

Test Results in Accordance with CSA B415.1-10

	HHV Basis	LHV Basis
Overall Efficiency	78.0%	84.3%
Combustion Efficiency	97.6%	97.6%
Heat Transfer Efficiency	80%	86.3%

Output Rate (kJ/h)	17,886	16,967	**(Btu/h)**
Burn Rate (kg/h)	1.16	2.55	**(lb/h)**
Input (kJ/h)	22,939	21,761	**(Btu/h)**

Test Load Weight (dry kg)	6.35	13.99	**dry lb**
MC wet (%)	16.7		
MC dry (%)	20.05		
Particulate (g)	3.37		
CO (g)	224		
Test Duration (h)	5.48		

Emissions	**Particulate**	**CO**
g/MJ Output	0.03	2.29
g/kg Dry Fuel	0.53	35.34
g/h	0.61	40.93
lb/MM Btu Output	0.08	5.32

Air/Fuel Ratio (A/F)	10.93

VERSION: **2.4** **4/15/2010**

OMNI-Test Laboratories, Inc.

ASTM E2780 Wood Heater Run Sheets

Client: Kuma Project Number: 0123WM014E Run Number: 8
Model: K-251 Tracking Number: 2464 Date: 05/16/2023
Test Crew: Tony Tong
OMNI Equipment ID numbers: 00637, 00709, 00283A

ASTM E2515 Lab Sheet

Assembled By: Tony Tong

Date/Time in Dessicator: 05/16/23, 17:45

	Weighing #1	Weighing #2	Weighing #3	Weighing #4	Weighing #5
Date/Time:	05/18/23 7:30	05/22/23 8:00	05/23/23 12:50		
R/H %:	22.3	12.7	22.3		
Temp:	76.1	72.3	72.3		
200 mg Audit:	200.1	200.1	200.1		
2 g Audit:	2000.4	2000.4	2000.3		
100 g Audit:	99997.8	99997.9	99997.9		
Initials:	TT	TT	TT		

Train	Element	ID #	Tare (mg)	Weight (mg)	Weight (mg)	Weight (mg)	Weight (mg)	Weight (mg)
A (First Hour)	Front Filter	E953	117.0	118.5	118.4			
	Rear Filter	E954	117.1	116.7	116.8			
	Probe	0E54	114148.0	114148.4	114148.1	114148.1		
	O-Ring Set	S501	3416.5	3416.6	3416.6			
A (Remainder)	Front Filter	E955	118.2	118.2	118.1			
	Rear Filter	E956	116.4	115.9	116.0			
	Probe	22	114340.7	114341.0	114340.7	114340.9		
	O-Ring Set	S504	3365.3	3366.3	3365.9	3366.0		
B	Front Filter	E957	117.4	119.5	119.5			
	Rear Filter	E958	117.1	116.8	116.6			
	Probe	72	115950.0	115950.2	115950.1			
	O-Ring Set	S487	4123.0	4123.7	4123.4	4123.5		
BG	Filter	E959	117.9	117.9	117.9			

Technician Signature: Tony Tong Date: 05/23/2023

OMNI-Test Laboratories, Inc.

ASTM E2780 Wood Heater Run Sheets

Client: Kuma Project Number: 0123WM014E Run Number: 8
Model: K-251 Tracking Number: 2464 Date: 05/16/2023
Test Crew: Tony Tong
OMNI Equipment ID numbers: 00335, 00336, 00594, 00185, 00322

Wood Heater Run Notes

Air Control Settings

Primary:

OPEN 0.3125" of Rod Pull.

Secondary: FIXED

Tertiary/Pilot: FIXED

Fan: OFF, DURATION (FAN CONFIRM. TEST)

Preburn Notes

Time	Notes
10:46	Recording preburn @ 7-9 lbs with Catagory 2 setting.

Test Notes

Sketch test fuel configuration:

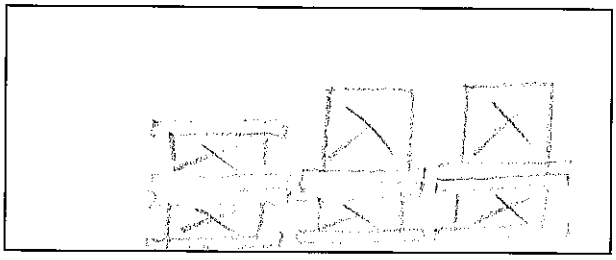

Start up procedures & Timeline:

Bypass: OPEN for Loading
Fuel loaded by: 45 sec
Door closed at: 58 sec
Primary air: Fully Closed ~~to~~ test Setting Duration of Start-up and Test

Notes:

Time	Notes
11:58	TEST Start.
12:58	First hour filters change.
	Test ended

Technician Signature: Tony Tong

Date: 05/16/23

OMNI-Test Laboratories, Inc.

ASTM E2780 Wood Heater Run Sheets

Client: Kuma Project Number: 0123WM014E Run Number: 8
Model: K-251 Tracking Number: 2464 Date: 05/16/2023
Test Crew: Tony Tong
OMNI Equipment ID numbers: 00594, 00410, 00716, 00721, 00255

Wood Heater Supplemental Data

Start Time: 11:58 Booth #: E1
Stop Time:

Stack Gas Leak Check:
Initial: good Final: good

Sample Train Leak Check:
A: 0.000 @ 10.87"Hg
B: 0.000 @ 9.77"Hg
A, 0.000 @ 10.93"Hg

Calibrations: Span Gas CO_2: 16.84% CO: 4.38% CO : 500 ppm

	Pre Test		Post Test	
	Zero	Span	Zero	Span
Time	11:03	11:06	17:36	17:40
CO_2 %	0.00	16.85	0.00	16.74
CO %	0.00	4.40	0.00	4.37
CO ppm	0.0	494	0.0	491.9

Air Velocity (ft/min): Initial: <50 Final: <50
Scale Audit (lbs): Initial: 10 Final: 10
Pitot Tube Leak Test: Initial: good Final: good
Stack Diameter (in): 6
Induced Draft: 0.000
% Smoke Capture: 100
Flue Pipe Cleaned Prior to First Test in Series:
Date: 04/04/23 Initials: TT

	Initial	Middle	Ending
P_b (in/Hg)	30.12	30.06	30.01
RH (%)	46	42	41
Ambient (°F)	81	82	82

Tunnel Traverse

Microtector Reading	dP (in H_2O)	T(°F)
1	.120	95
2	.148	95
3	.148	95
4	.110	96
5	.110	96
6	.144	96
7	.154	96
8	.138	96
Center:		
	.166	96

Background Filter Volume: 49.001 cf^3

Tunnel Static Pressure (in H_2O):	
Beginning of Test	End of Test
-0.48	-0.48

Technician Signature: Tony Tong Date: 05/16/23

OMNI-Test Laboratories, Inc. **ASTM E2780 Wood Heater Run Sheets**

Client: Kuma Project Number: 0123WM014E Run Number: 8
Model: K-251 Tracking Number: 2464 Date: 05/16/2023
Test Crew: Tony Tong
OMNI Equipment ID numbers: 00340, 00431, T61, 00353

Wood Heater Fuel Data

Fuel: Douglas fir, untreated and air dried, standard grade or better dimensional lumber

Pre-Burn Fuel

Calibration: Cal Value (1) = 12% Actual Reading 12.9
Cal Value (2) = 22% Actual Reading 22.7

Piece:	Length:	Reading:	Piece:	Length:	Reading:
1	12 in	20.0	7	16 in	20.0
2	12 in	19.3	8	in	
3	12 in	22.5	9	in	
4	12 in	21.9	10	in	
5	16 in	19.7	11	in	
6	16 in	19.5	12	in	

Total Pre-Burn Fuel Weight: 9.9 lbs Pre-Burn Fuel Average Moisture:

Time (clock): 9:50 Room Temperature (F): 81 Initials: TT

Test Fuel

Firebox Volume (ft³): 2.56
Load Weight Range (lb): ~~(16.B, 19.71)~~
Test Fuel Piece Length (in): 17.25"
Total Wet Fuel Load Weight (lb): 16.8 (3.4, 4.2)

Fuel Type & Amount: 2 x 4: 4 4 x 4: 2
Weight (with spacers): 7.9 Weight (with spacers): 8.9

Piece:	Weight (lbs):	Moisture Readings (%DB):			Fuel Type:
1	1.6	20.0	20.9	19.8	2x4
2	1.6	20.3	20.3	22.1	2x4
3	1.6	20.0	19.4	21.9	2x4
4	1.5	19.3	19.1	19.8	2x4
5	4.2	21.0	21.3	24.4	4x4
6	4.2	22.8	23.1	20.4	4x4
7					

Spacer Moisture Readings (%DB)

11.1	10.6	11.3	12.0	12.1	12.5	12.8	11.2
12.8	13.8	11.7	11.1	14.0	12.8	11.6	10.2
8.2	13.8	12.8	7.9				

Time (clock): 10:10 Room Temperature (F): 81 Initials: TT

Technician Signature: Tony Tong Date: 05/16/23

Section 3

QUALITY ASSURANCE / QUALITY CONTROL

QUALITY ASSURANCE/QUALITY CONTROL

OMNI follows the guidelines of ISO/IEC 17025, "General Requirements for the Competence of Testing and Calibration Laboratories," and the quality assurance/quality control (QA/QC) procedures found in *OMNI*'s Quality Assurance Manual.

OMNI's scope of accreditation includes, but is not limited to, the following:

- ANSI (American National Standards Institute) for certification of product to safety standards.
- To perform product safety testing by the International Accreditation Service, Inc. (formerly ICBO ES) under accreditation as a testing laboratory designated TL-130.
- To perform product safety testing as a "Certification Organization" by the Standards Council of Canada (SCC).
- Serving as a testing laboratory for the certification of wood heaters by the U.S. Environmental Protection Agency.

This report is issued within the scope of *OMNI*'s accreditation. Accreditation certificates are available upon request.

The manufacturing facilities and quality control system for the production of the Apex NexGen-Hybrid at Travis Industries, Inc. were evaluated to determine if sufficient to maintain conformance with OMNI's requirements for product certification. OMNI has concluded that the manufacturing facilities, processes, and quality control system are adequate to produce the appliance congruous with the standards and model codes to which it was evaluated.

This report shall not be reproduced, except in full, without the written approval of OMNI-Test Laboratories, Inc.

Sample Analysis

Analysis of Worksheets
Tared Filter, Probe, and O-Ring Data

ASTM E2780 Wood Heater Run Sheets

Client: Kuma Project Number: 0123WM014E Run Number: 1
Model: K-251 Tracking Number: 2464 Date: 04/12/2023
Test Crew: Tony Tong
OMNI Equipment ID numbers: 00637, 00709, 00283 A

ASTM E2515 Lab Sheet

Assembled By: Tony Tong

Date/Time in Dessicator: 04/12/23, 15:45

	Weighing #1	Weighing #2	Weighing #3	Weighing #4	Weighing #5
Date/Time:	04/18/23 16:00	04/20/23 7:40	04/24/23 7:30		
R/H %:	17.3	7.9	8.5		
Temp:	67.4	66.0	66.3		
200 mg Audit:	200.1	200.1	200.0		
2 g Audit:	2000.3	2000.3	2000.1		
100 g Audit:	99997.8	99997.9	99997.9		
Initials:	TT	TT	TT		

Train	Element	ID #	Tare (mg)	Weight (mg)	Weight (mg)	Weight (mg)	Weight (mg)	Weight (mg)
A (First Hour)	Front Filter	E861	119.4	120.0	119.7	119.9		
	Rear Filter	E862	117.6	117.6	117.5			
	Probe	2	115012.4	115012.7	115012.8			
	O-Ring Set	S469	3350.7	3351.1	3351.0			
A (Remainder)	Front Filter	E863	119.1	119.0	118.8			
	Rear Filter	E864	117.5	117.4	117.5			
	Probe	15	114340.7	114340.7	114340.7			
	O-Ring Set	S470	3341.6	3342.2	3342.0			
B	Front Filter	E865	119.0	119.4	119.4			
	Rear Filter	E866	117.7	117.7	117.7			
	Probe	23	114076.4	114076.6	114076.4			
	O-Ring Set	S471	3289.4	3289.9	3289.8			
BG	Filter	E867	119.1	119.2	119.3			

Technician Signature: Tony Tong Date: 04/27/23

ASTM E2780 Wood Heater Run Sheets

Client: Kuma Project Number: 0123WM014E Run Number: 2
Model: K-251 Tracking Number: 2464 Date: 04/13/2023
Test Crew: Tony Tong
OMNI Equipment ID numbers: 00637, 00709, 0283A

ASTM E2515 Lab Sheet

Assembled By: Tony Tong

Date/Time in Dessicator: 04/13/23, 7:30

	Weighing #1	Weighing #2	Weighing #3	Weighing #4	Weighing #5
Date/Time:	04/18/23 16:00	04/20/23 7:40	04/24/23 7:30		
R/H %:	17.3	7.9	8.5		
Temp:	67.4	66.0	66.3		
200 mg Audit:	200.1	200.1	200.0		
2 g Audit:	2000.3	2000.3	2000.1		
100 g Audit:	99997.8	99997.9	99997.9		
Initials:	TT	TT	TT		

Train	Element	ID #	Tare (mg)	Weight (mg)	Weight (mg)	Weight (mg)	Weight (mg)	Weight (mg)
A (First Hour)	Front Filter	E868	118.4	121.2	121.1			
	Rear Filter	E869	119.2	119.4	119.3			
	Probe	29	114275.8	114276.2	114275.8	114276.0		
	O-Ring Set	S472	3341.6	3341.8	3341.8			
A (Remainder)	Front Filter	E870	117.8	126.5	126.5			
	Rear Filter	E871	119.2	118.8	118.7			
	Probe	65	117079.9	117080.1	117079.8	117080.0		
	O-Ring Set	S473	4112.6	4113.9	4113.9			
B	Front Filter	E872	117.8	128.7	128.7			
	Rear Filter	E873	118.7	119.4	119.6			
	Probe	84	117635.0	117635.7	117635.4	117635.6		
	O-Ring Set	S474	3308.3	3308.6	3308.6			
BG	Filter	E874	118.0	118.1	118.1			

Technician Signature: Tony Tong Date: 04/24/23

OMNI-Test Laboratories, Inc.

ASTM E2780 Wood Heater Run Sheets

Client: Kuma | Project Number: 0123WM014E | Run Number: 3
Model: K-251 | Tracking Number: 2464 | Date: 04/17/2023
Test Crew: Tony Tong
OMNI Equipment ID numbers: 00637, 00709, 00283A

ASTM E2515 Lab Sheet

Assembled By: Tony Tong

Date/Time in Dessicator: 04/18/23, 8:00

	Weighing #1	Weighing #2	Weighing #3	Weighing #4	Weighing #5
Date/Time:	04/20/23 7:40	04/25/23 7:30	05/02/23 15:00		
R/H %:	7.9	12.3	10.6		
Temp:	66.0	67.1	71.7		
200 mg Audit:	200.1	200.0	200.0		
2 g Audit:	2000.3	2000.2	2000.3		
100 g Audit:	99997.9	99998.0	99997.8		
Initials:	TT	TT	TT		

Train	Element	ID #	Tare (mg)	Weight (mg)	Weight (mg)	Weight (mg)	Weight (mg)	Weight (mg)
A (First Hour)	Front Filter	E875	118.7	121.2	121.2			
	Rear Filter	E876	118.2	117.8	117.8			
	Probe	33	113943.0	113943.1	113943.4	113943.2		
	O-Ring Set	S475	3315.4	3316.5	3316.0	3315.9		
A (Remainder)	Front Filter	E877	118.5	122.1	122.0			
	Rear Filter	E878	118.0	118.1	118.2			
	Probe	58	117067.7	117067.8	117067.8			
	O-Ring Set	S476	3434.0	3434.7	3434.3	3434.3		
B	Front Filter	E879	118.8	125.1	125.1			
	Rear Filter	E880	117.5	117.8	117.8			
	Probe	79	118144.6	118144.8	118144.7			
	O-Ring Set	S477	3373.9	3374.7	3374.3	3374.4		
BG	Filter	E881	118.2	118.3	118.3			

Technician Signature: Tony Tong

Date: 05/02/2023

Client: Kuma Project Number: 0123WM014E Run Number: 4
Model: K-251 Tracking Number: 2464 Date: 04/18/2023
Test Crew: Tony Tong
OMNI Equipment ID numbers: 00637, 00709, 00283A

ASTM E2515 Lab Sheet

Assembled By: Tony Tong

Date/Time in Dessicator: 04/18/2023, 17:00

	Weighing #1	Weighing #2	Weighing #3	Weighing #4	Weighing #5
Date/Time:	04/20/23 7:46	04/25/23 7:30	05/02/23 15:00		
R/H %:	7.9	12.3	10.6		
Temp:	66.0	67.1	71.7		
200 mg Audit:	200.1	200.0	200.0		
2 g Audit:	2000.3	2000.2	2000.3		
100 g Audit:	99997.9	99998.0	99997.8		
Initials:	TT	TT	TT		

Train	Element	ID #	Tare (mg)	Weight (mg)	Weight (mg)	Weight (mg)	Weight (mg)	Weight (mg)
A (First Hour)	Front Filter	E882	117.4	119.1	119.0			
	Rear Filter	E883	118.8	118.7	118.8			
	Probe	OES3	114770.5	114770.4	114770.7	114770.5		
	O-Ring Set	S478	3385.0	3385.6	3385.1	3385.0		
A (Remainder)	Front Filter	E884	119.0	119.2	119.2			
	Rear Filter	E885	119.4	119.2	119.3			
	Probe	11	114185.3	114185.5	114185.5			
	O-Ring Set	S479	3372.2	3372.6	3372.3	3372.2		
B	Front Filter	E886	118.4	120.0	119.9			
	Rear Filter	E887	118.9	119.1	119.1			
	Probe	83	117541.8	117541.9	117542.0			
	O-Ring Set	S480	3433.5	3434.3	3433.9	3433.7		
BG	Filter	E888	119.1	119.1	119.1			

Technician Signature: Tony Tong Date: 05/18/23

Control No. P-SFDT-0001, Effective Date: 01/12/2016

Client: Kuma Project Number: 0123WM014E Run Number: 5
Model: K-251 Tracking Number: 2464 Date: 05/02/2023
Test Crew: Tony Tong
OMNI Equipment ID numbers: 00637, 00709, 00283A

ASTM E2515 Lab Sheet

Assembled By: Tony Tong

Date/Time in Dessicator: 05/03/23, 8:00

	Weighing #1	Weighing #2	Weighing #3	Weighing #4	Weighing #5
Date/Time:	05/04/23 8:00	05/08/23 8:10	05/09/23 15:30	05/10/23 7:45	
R/H %:	24.7	9.7	16.9	19.8	
Temp:	71.2	69.0	71.4	70.7	
200 mg Audit:	200.1	200.1	200.0	200.0	
2 g Audit:	2000.3	2000.3	2000.2	2000.3	
100 g Audit:	99997.8	99997.8	99998.0	99997.9	
Initials:	TT	TT	TT	TT	

Train	Element	ID #	Tare (mg)	Weight (mg)	Weight (mg)	Weight (mg)	Weight (mg)	Weight (mg)
A (First Hour)	Front Filter	E904	117.5	124.5	124.2	124.3		
	Rear Filter	E905	117.7	117.9	117.9			
	Probe	18	114398.7	114399.9	114399.9			
	O-Ring Set	S481	3425.4	3426.0	3425.2	3425.4		
A (Remainder)	Front Filter	E906	117.4	132.1	131.6	131.6		
	Rear Filter	E907	116.2	117.7	117.3	117.3		
	Probe	60	112126.5	112127.6	112127.5			
	O-Ring Set	S482	3353.4	3354.7	3353.8	3353.8		
B	Front Filter	E908	117.6	139.8	139.0	138.6	138.6	
	Rear Filter	E909	116.7	117.8	117.9			
	Probe	38	114148.9	114150.0	114150.0			
	O-Ring Set	S483	3394.7	3395.8	3394.9	3394.9		
BG	Filter	E910	117.7	117.7	117.7			

Technician Signature: Tony Tong Date: 05/10/23

Client: Kuma Project Number: 0123WM014E Run Number: 6
Model: K-251 Tracking Number: 2464 Date: 05/09/2023
Test Crew: Tony Tong
OMNI Equipment ID numbers: 00637, 00709, 00283A

ASTM E2515 Lab Sheet

Assembled By: Tony Tong

Date/Time in Dessicator: 05/09/23 1800

	Weighing #1	Weighing #2	Weighing #3	Weighing #4	Weighing #5
Date/Time:	05/11/23 14:35	05/16/23 8:30	05/18/23 7:30		
R/H %:	15.1	3.7	22.3		
Temp:	72.6	75.0	76.1		
200 mg Audit:	200.2	200.2	200.1		
2 g Audit:	2000.3	2000.3	2000.4		
100 g Audit:	99998.0	99997.8	99997.8		
Initials:	TT	TT	TT		

Train	Element	ID #	Tare (mg)	Weight (mg)	Weight (mg)	Weight (mg)	Weight (mg)	Weight (mg)
A (First Hour)	Front Filter	E911	116.6	118.7	118.5			
	Rear Filter	E912	115.6	115.6	115.6			
	Probe	14	114546.4	114547.6	114546.9	114546.8		
	O-Ring Set	S484	3317.3	3317.6	3317.5			
A (Remainder)	Front Filter	E913	117.4	119.3	119.3			
	Rear Filter	E914	117.2	117.4	117.3			
	Probe	71	117766.1	117766.5	117766.6			
	O-Ring Set	S485	3402.8	3402.9	3402.8			
B	Front Filter	E915	117.0	120.8	120.8			
	Rear Filter	E916	117.5	118.0	117.9			
	Probe	82	116286.5	116286.7	116286.6			
	O-Ring Set	S486	3454.7	3454.8	3454.7			
BG	Filter	E917	115.8	115.9	115.9			

Technician Signature: Tony Tong Date: 05/18/23

Client: Kuma Project Number: 0123WM014E Run Number: 7
Model: K-251 Tracking Number: 2464 Date: 05/11/2023
Test Crew: Tony Tong
OMNI Equipment ID numbers: 00637, 00709, 00283 A

ASTM E2515 Lab Sheet

Assembled By: Tony Tong

Date/Time in Dessicator: 5-11-23 21:58

	Weighing #1	Weighing #2	Weighing #3	Weighing #4	Weighing #5
Date/Time:	5-15-23	05/16/23 17:00	05/18/23 7:30	05/22/23 8:00	
R/H %:	18.4	17.8	22.3	12.7	
Temp:	74.6 °F	76.2	76.1	72.3	
200 mg Audit:		200.0	200.1	200.1	
2 g Audit:	0.20003	2000.2 mg	2000.4	2000.4	
100 g Audit:	0.99998	99998.0 mg	99997.8	99997.9	
Initials:	K	TT	TT	TT	

Train	Element	ID #	Tare (mg)	Weight (mg)	Weight (mg)	Weight (mg)	Weight (mg)	Weight (mg)
A (First Hour)	Front Filter	E918	117.1	117.7	117.7			
	Rear Filter	E919	117.8	117.5	117.5			
	Probe	6	115345.7	115345.9	115346.3	115346.2		
	O-Ring Set	5503 ~~5487~~	4101.2 ~~4123.0~~	4102.6	4103.2	4101.8	4101.6	
A (Remainder)	Front Filter	E920	117.1	122.4	122.3			
	Rear Filter	E949	119.0	119.6	119.5			
	Probe	20	114254.4 ~~118254.4~~	114254.9	114254.7			
	O-Ring Set	5488	3345.4	3347.5	3348.6	3346.3	3346.1	
B	Front Filter	E950	116.8	123.9	123.9			
	Rear Filter	E951	117.0	117.8	117.7			
	Probe	69	117371.9	117372.4	117372.4			
	O-Ring Set	5502	3418.6	3419.9	3420.7	3418.9	3418.7	
BG	Filter	E952	118.5	118.4	118.5			

Technician Signature: Tony Tong Date: 05/23/2023

ASTM E2780 Wood Heater Run Sheets

Client: Kuma Project Number: 0123WM014E Run Number: 8
Model: K-251 Tracking Number: 2464 Date: 05/16/2023
Test Crew: Tony Tong
OMNI Equipment ID numbers: 00637, 00709, 00283A

ASTM E2515 Lab Sheet

Assembled By: Tony Tong

Date/Time in Dessicator: 05/16/23, 17:45

	Weighing #1	Weighing #2	Weighing #3	Weighing #4	Weighing #5
Date/Time:	05/18/23 7:30	05/22/23 8:00	05/23/23 12:50		
R/H %:	22.3	12.7	22.3		
Temp:	76.1	72.3	72.3		
200 mg Audit:	200.1	200.1	200.1		
2 g Audit:	2000.4	2000.4	2000.3		
100 g Audit:	99997.8	99997.9	99997.9		
Initials:	TT	TT	TT		

Train	Element	ID #	Tare (mg)	Weight (mg)	Weight (mg)	Weight (mg)	Weight (mg)	Weight (mg)
A (First Hour)	Front Filter	E953	117.0	118.5	118.4			
	Rear Filter	E954	117.1	116.7	116.8			
	Probe	0E54	114148.0	114148.4	114148.1	114148.1		
	O-Ring Set	S501	3416.5	3416.6	3416.6			
A (Remainder)	Front Filter	E955	118.2	118.2	118.1			
	Rear Filter	E956	116.4	115.9	116.0			
	Probe	22	114340.7	114341.0	114340.7	114340.9		
	O-Ring Set	S504	3365.3	3366.3	3365.9	3366.0		
B	Front Filter	E957	117.4	119.5	119.5			
	Rear Filter	E958	117.1	116.8	116.6			
	Probe	72	115950.0	115950.2	115950.1			
	O-Ring Set	S487	4123.0	4123.7	4123.4	4123.5		
BG	Filter	E959	117.9	117.9	117.9			

Technician Signature: Tony Tong Date: 05/23/2023

Tare Sheet: (check one) **Probes**_____ **47mm Filters** ✓ **100mm Filters**_____ **O-Ring Pair**_____

Prepared By: Tony Tong Balance ID #: omni-00637 Thermohygrometer ID #: omni-00709 Audit Weight ID #/Mass: omni-00283A1 200 mg

Placed in Dessicator: Date: 03/29/23 Time: 15:00	Date: 03/30/23 Time: 15:30 RH %: 10.4 T (°F): 68.5 Audit: 200.0	Date: 04/03/2023 Time: 8:00 RH %: 13.3 T (°F): 63.6 Audit: 200.1	Date: 04/04/23 Time: 11:20 RH %: 11.3 T (°F): 65.6 Audit: 200.1	Date: Time: RH %: T (°F): Audit:	Date Used	Project Number	Run No.
ID #							
E861	119.4	119.4 ✓			04/12/23	0123WM014E	1
E862	117.6	117.6 ✓					
E863	119.2	119.1 ✓					
E864	117.5	117.5 ✓					
E865	119.0	119.0 ✓					
E866	117.8	117.7 ✓					
E867	119.1	119.1 ✓					
E868	118.4	118.4 ✓			04/13/23	0123WM014E	2
E869	119.4	119.2 ✓					
E870	118.0	117.8 ✓					
E871	119.4	119.2 ✓					
E872	117.9	117.8 ✓					
E873	118.6	118.7 ✓					
E874	118.2	118.0 ✓					
E875	119.2	118.8	118.7 ✓		04/17/23	0123WM014E	3
E876	118.1	118.2 ✓					
E877	118.7	118.5 ✓					
E878	117.9	118.0 ✓					
E879	119.0	118.8 ✓					
E880	117.7	117.5 ✓					
	Initials: TT	Initials: TT	Initials: TT	Initials:			

Final Technician Signature: Tony Tong Date: 04/04/23 Evaluator signature: K. Morgan

Control No. P-SFDP-0002.xls, Effective date: 2/1/2017

Tare Sheet: (check one) **Probes**_____ **47mm Filters**✓ **100mm Filters**_____ **O-Ring Pair**_____

Prepared By: Balance ID #: Thermohygrometer ID #: Audit Weight ID #/Mass: 1

Placed in Dessicator: Date: 4-27-23 Time: 1045	Date: 04/02/23 Time: 1400 RH %: 20.6 T (°F): 71.7 Audit: 200.0	Date: 04/03/23 Time: 1430 RH %: 19.8 T (°F): 71.9 Audit: 200.0	Date: Time: RH %: T (°F): Audit:	Date: Time: RH %: T (°F): Audit:	Date Used	Project Number	Run No
ID #							
E941	117.9	118.0 ✓			05-17-23	0552WS002E	3
E942	118.6	118.6 ✓			↓	↓	↓
E943	117.3	117.2 ✓					
E944	118.1	118.1 ✓					
E945	118.3	118.4 ✓					
E946	118.6	118.5 ✓					
E947	118.2	118.3 ✓					
E948	118.0	118.0 ✓					
E949	119.0	119.0 ✓			05/11/23	0123WM014E	7
E950	116.8	116.8 ✓			↓	↓	↓
E951	116.9	117.0 ✓					
E952	118.5	118.5 ✓					
E953	116.9	117.0 ✓			05/16/23	0123WM014E	8
E954	117.2	117.1 ✓			↓	↓	↓
E955	118.3	118.2 ✓					
E956	116.3	116.4 ✓					
E957	117.4	117.4 ✓					
E958	117.2	117.1 ✓					
E959	117.8	117.9 ✓					
E960	116.4	116.5 ✓					
	Initials: RO	Initials: RT	Initials:	Initials:			

Final Technician Signature: [signature] Date: 05-30-2023 Evaluator signature: [signature]

Control No. P-SFDP-0002.xls, Effective date: 2/1/2017

Tare Sheet: (check one) Probes_____ 47mm Filters ✓ 100mm Filters_____ O-Ring Pair_____

Prepared By: Tony Tong Balance ID #: 00637 Thermohygrometer ID #: 00709 Audit Weight ID #/Mass: 00283 A / 200mg

Placed in Dessicator: Date: 03/29/23 Time: 15:00	Date: 03/30/23 Time: 15:30 RH %: 10.4 T (°F): 68.5 Audit: 200.0	Date: 04/03/2023 Time: 8:00 RH %: 13.3 T (°F): 63.6 Audit: 200.1	Date: 04/04/23 Time: 11:20 RH %: 11.3 T (°F): 65.6 Audit: 200.1	Date: Time: RH %: T (°F): Audit:	Date Used	Project Number	Run No.
ID #							
E901	119.0	119.2			04/25/22	Proficiency Test	2
E902	118.7	118.8					
E903	119.3	119.3					
E904	117.5	117.5			05/02/2023	0123WM014E	5
E905	117.8	117.7					
E906	117.5	117.4					
E907	116.4	116.2					
E908	117.5	117.6					
E909	116.7	116.7					
E910	117.7	117.7					
E911	116.7	116.6			05/09/23	0123WM014E	6
E912	115.6	115.6					
E913	117.4	117.4					
E914	117.3	117.2					
E915	117.1	117.0					
E916	117.5	117.5					
E917	115.8	115.8					
E918	117.2	117.1			05/11/23	0123WM014E	7
E919	118.0	117.7	117.8				
E920	117.2	117.1					
	Initials: TT	Initials: TT	Initials: TT	Initials:			

Final Technician Signature: Tony Tong Date: 05/30/2023 Evaluator signature: K. J. Morgan

Control No. P-SFDP-0002.xls, Effective date: 2/1/2017

Tare Sheet: (check one) **Probes**_____ **47mm Filters** ✓ **100mm Filters**_____ **O-Ring Pair**_____

Prepared By: Tony Tong Balance ID #: 00637 Thermohygrometer ID #: 00709 Audit Weight ID #/Mass: 00283 A / 200 mg

Placed in Dessicator: Date: 03/29/23 Time: 15:00	Date: 03/30/23 Time: 15:30 RH %: 10.4 T (°F): 68.5 Audit: 200.0	Date: 04/03/2023 Time: 8:00 RH %: 13.3 T (°F): 63.6 Audit: 200.1	Date: Time: RH %: T (°F): Audit:	Date: Time: RH %: T (°F): Audit:	Date Used	Project Number	Run No.
ID #							
E881	118.3	118.2 ✓			04/17/23	0123 WM 014 E	3
E882	117.5	117.4 ✓			04/18/23	0123 WM 014 E	4
E883	118.7	118.8 ✓			↓	↓	↓
E884	119.1	119.0 ✓					
E885	119.5	119.4 ✓					
E886	118.4	118.4 ✓					
E887	119.1	118.9 ✓					
E888	119.1	119.1 ✓			↓	↓	↓
E889	119.0	119.1 ✓		Replaced	04/24/23	Proficiency Test	1
E890	117.2	117.2 ✓		↓	↓	↓	↓
E891	116.9	116.7 ✓					
E892	117.9	117.8 ✓					
E893	117.1	117.0 ✓					
E894	118.5	118.4 ✓					
E895	117.2	117.3 ✓					
E896	118.0	118.2 ✓			↓	↓	↓
E897	117.0	116.8 ✓			04/24/23	Proficiency Test	1
E898	118.8	118.6 ✓			↓	↓	↓
E899	118.7	118.9 ✓			04/25/23	Proficiency Test	2
E900	118.3	118.3 ✓			↓	↓	↓
	Initials: TT	Initials: TT	Initials:	Initials:			

Final Technician Signature: Tony Tong Date: 05/30/2023 Evaluator signature: K. J. Morgan

Control No. P-SFDP-0002.xls, Effective date: 2/1/2017

Tare Sheet: (check one) **Probes** ✓ **47mm Filters**____ **100mm Filters**____ **O-Ring Pair**____

Prepared By: Tony Tang Balance ID #: 00637 Thermohygrometer ID #: 00709 Audit Weight ID #/Mass: 00283 A / 100g

Placed in Dessicator: Date: 03/30/23 Time: 14:00

ID #	Date: 04/03/23 Time: 10:30 RH %: 11.7 T (°F): 65.3 Audit: 99997.9	Date: 04/04/23 Time: 10:30 RH %: 11.3 T (°F): 65.6 Audit: 99998.0	Date: 04/05/23 Time: 8:10 RH %: 9.0 T (°F): 65.3 Audit: 99997.9	Date: Time: RH %: T (°F): Audit:	Date Used	Project Number	Run No
9	115695.1	115695.2			04/24/23	Proficiency Test	1
71	117766.2	117766.1			05/09/23	0123WM014E	6
58	117067.8	117067.7			04/17/23	0123WM014E	3
79	118144.7	118144.6			↓	↓	↓
OES3	114770.2	114770.0			04/18/23	0123WM014E	4
67	117758.3	117758.1			04/25/23	Proficiency Test	2
25	114299.2	114299.0		Not used	04/24/23	~~012~~ Proficiency Test	1
34	115868.0	115868.0			04/25/23	↓	~~3~~
11	114185.4	114185.3			04/18/23	0123WM014E	4
23	114076.8	114076.5	114076.4		04/12/23	0123WM014E	1
7	114978.9	114979.0			~~04/25/23 Proficiency~~	Proficiency Test	2
83	117542.0	117541.8			04/18/23	0123WM014E	4
29	114275.7	114275.8			04/13/23	0123WM014E	2
56	118612.6	118612.7			04/24/23	Proficiency Test	1
4	114854.7	114855.1	114855.1		↓	↓	↓
33	113943.0	113943.0			04/17/23	0123WM014E	3
2	115012.2	115012.6	115012.4		04/12/23	0123WM014E	1
65	117079.9	117079.9			04/13/23	0123WM014E	2
15	114340.6	114340.7			04/12/23	0123WM014E	1
84	117635.1	117634.8	117635.0		04/13/23	0123WM014E	2
	Initials: TT	Initials: TT	Initials: TT	Initials:			

Final Technician Signature: Tony Tang Date: 05/30/2023 Evaluator signature: K.A. Morgan

Control No. P-SFDP-0002.xls, Effective date: 2/1/2017

Tare Sheet: (check one) **Probes** ✓ **47mm Filters**____ **100mm Filters**____ **O-Ring Pair**____

Prepared By: Tony Tong Balance ID #: 20637 Thermohygrometer ID #: 00709 Audit Weight ID #/Mass: 00283 A 1 100 g

Placed in Dessicator: Date: 11/28/22 Time: 10:00

ID #	Date: 04/19/23 Time: 17:00 RH %: 19.2 T (°F): 68.0 Audit: 99998.0	Date: 04/20/23 Time: 14:30 RH %: 11.2 T (°F): 67.6 Audit: 99997.9	Date: 05/03/23 Time: 8:30 RH %: 14.2 T (°F): 70.3 Audit: 99997.9	Date: Time: RH %: T (°F): Audit:	Date Used	Project Number	Run No
14	114546.6	114546.4			05/09/23	0123WM014E	6
38	114149.1	114148.9			05/02/23	0123WM014E	5
62	117662.1	117661.9	→	→	Not used		
61	118127.5	118127.2	→	→	Not used		
18	114398.8	114398.7			05/02/23	0123WM014E	5
60	112126.6	112126.5			↓	↓	↓
74	117664.0	117663.6	→	→	Not used		
16	114266.0	114265.6	→	→	↓		
24	114128.1	114127.8	→	→	↓		
	Initials: TT	Initials: TT	Initials:	Initials:			

Final Technician Signature: Tony Tong Date: 04/20/23 Evaluator signature: [illegible]

Tare Sheet: (check one) **Probes** ✓ **47mm Filters**____ **100mm Filters**____ **O-Ring Pair**____

Prepared By: Balance ID #: Thermohygrometer ID #: Audit Weight ID #/Mass: /

Placed in Dessicator: Date: 04-25-23 Time: 0900	Date: 04-27-23 Time: 1010 RH %: 17.1 T (°F): 69.9	Date: 05-02-23 Time: 1006 RH %: 21.0 T (°F): 71.6	Date: 05-03-23 Time: 1309 RH %: 11.7 T (°F): 71.2	Date: 05/08/23 Time: 8:45 RH %: 20.1 T (°F): 69.8	Date Used	Project Number	Run No.
ID #	Audit: 99997.9	Audit: 99998.0	Audit: 99997.9	Audit: 99998.0			
77	116180.7	116180.9 ✓					
8	115596.1	115596.3 ✓					
6	115345.5	115345.7 ✓					
72	115950.0	115950.0 ✓			05/11/23	0123WM014E	7
31	114362.8	114363.0 ✓			05/16/23	0123WM014E	8
36	114883.2	114883.4 ✓					
12	114284.2	114284.3 ✓			05-17-23	0552WS002E	3
30	114327.1	114327.5	114327.4 ✓		05-17-23	0552WS002E	3
OES 6	113708.6	113708.6 ✓			05-16-2023	0552WS002E	1
28	114750.9	114751.0 ✓			05-17-23	0552WS002E	3
21	114389.6	114389.6 ✓			05-17-23	0552WS002E	2
5	113570.5	113570.7 ✓			05-16-23	0552WS002E	1
82	116286.3	116286.5 ✓					
73	117066.6	117066.9	117066.8 ✓		05/09/23	0123WM014E	6
37	114465.0	114465.9	114465.8 ✓		05-16-23	0552WS002E	1
75	117637.3	117638.0	117637.7	117637.7	05-17-23	0552WS002E	2
27	114352.2	114352.4 ✓					
35	114327.5	114327.7 ✓					
20	114254.3	114254.4 ✓					
OES 5	113570.4	113570.9	113570.8 ✓		05/11/23	0123WM014E	7
	Initials: RT	Initials: RT	Initials: RT	Initials: TT	05-17-23	0552WS002E	2

Final Technician Signature: [signature] Date: 05-30-2023 Evaluator signature: [signature]

Control No. P-SFDP-0002.xls, Effective date: 2/1/2017

Tare Sheet: (check one) **Probes**_____ **47mm Filters**_____ **100mm Filters**_____ **O-Ring Pair**_____

Prepared By: Balance ID #: Thermohygrometer ID #: Audit Weight ID #/Mass: /

Placed in Dessicator: Date: 04-25-23 Time: 0900	Date: 4-27-23 Time: 1010 RH %: 17.1 T (°F): 69.9	Date: 05-02-23 Time: 1000 RH %: 21.0 T (°F): 71.6	Date: 0503-23 Time: 1309 RH %: 11.7 T (°F): 71.2	Date: Time: RH %: T (°F):	Date Used	Project Number	Run No
ID #	Audit: 99997.9	Audit: 99998.0	Audit: 99997.9	Audit:			
69	117371.8	117371.9 ✓			05/11/23	0123WM014E	7
OES 4	114147.5	114147.8	114148.0 ✓		05/16/23	0123WM014E	8
53	118272.3	118272.5 ✓					
22	114340.5	114340.7 ✓			05/16/23	0123WM014E	8
	Initials: RT	Initials: RT	Initials: RT	Initials:			

Final Technician Signature: [signature] Date: 05-30-2023 Evaluator signature: [signature]

Control No. P-SFDP-0002.xls, Effective date: 2/1/2017

Tare Sheet: (check one) **Probes**_____ **47mm Filters**_____ **100mm Filters**_____ **O-Ring Pair** ✓

Prepared By: Tony Tong Balance ID #: 00637 Thermohygrometer ID #: 00709 Audit Weight ID #/Mass: 00283A 15g

Placed in Dessicator: Date: 01/26/2023 Time: 17:00

ID #	Date: 04/03/23 Time: 9:20 RH %: 6.3 T (°F): 64.7 Audit: 5000.0	Date: 04/04/23 Time: 11:00 RH %: 11.3 T (°F): 65.8 Audit: 5000.0	Date: 04/05/23 Time: 8:15 RH %: 9.0 T (°F): 65.3 Audit: 4999.9	Date: Time: RH %: T (°F): Audit:	Date Used	Project Number	Run No.
S469	3350.5	3350.7			04/12/2023	0123WM014E	1
S470	3341.5	3341.6			↓	↓	↓
S471	3289.3	3289.4			↓	↓	↓
S472	3341.4	3341.6			04/13/23	0123WM014E	2
S473	4112.6	4112.6			↓	↓	↓
S474	3308.3	3308.3			↓	↓	↓
S475	3315.3	3315.4			04/17/23	0123WM014E	3
S476	3433.8	3434.0			↓	↓	↓
S477	3374.0	3373.9			↓	↓	↓
S478	3384.8	3385.0			04/18/23	0123WM014E	4
S479	3372.1	3372.2			↓	↓	↓
S480	3433.2	3433.7	3433.5		↓	↓	↓
S481	3425.3	3425.4			05/02/23	0123WM014E	5
S482	3353.6	3353.4			↓	↓	↓
S483	3394.8	3394.7			↓	↓	↓
S484	3317.2	3317.5	3317.3		05/09/23	0123WM014E	6
S485	3402.7	3402.8			↓	↓	↓
S486	3454.6	3454.7			↓	↓	↓
S487	4122.9	4123.0			05/16/23	0123WM014E	8
S488	3345.3	3345.4			↓	↓	↓
	Initials: TT	Initials: TT	Initials: TT	Initials:	05/11/23	0123WM014E	7

Final Technician Signature: Tony Tong Date: 04/05/23 Evaluator signature: [illegible]

Control No. P-SFDP-0002.xls, Effective Date: 2/1/2017

Tare Sheet: (check one) **Probes**_____ **47mm Filters**_____ **100mm Filters**_____ **O-Ring Pair** ✓

Prepared By: Balance ID #: Thermohygrometer ID #: Audit Weight ID #/Mass: /

Placed in Dessicator: Date: 04-27-23 Time: 1025	Date: 05-02-23 Time: 1345 RH %: 12.3 T (°F): 71.2	Date: 05-03-23 Time: 1400 RH %: 12.8 T (°F): 71.4	Date: Time: RH %: T (°F):	Date: Time: RH %: T (°F):			
ID #	Audit: 5000.0	Audit: 5000.0	Audit:	Audit:	Date Used	Project Number	Run No
S489	3440.0	3439.9 ✓			05-16-23	0552WS002E	1
S490	3268.3	3268.4 ✓			↓	↓	↓
S491	3393.3	3393.5 ✓			↓	↓	↓
S492	3306.2	3306.1 ✓			05-17-23	↓	2
S493	3356.4	3356.4 ✓			↓	↓	↓
S494	4173.1	4173.1 ✓			↓	↓	↓
S495	3362.0	3362.2 ✓			↓	↓	↓
S496	3379.7	3379.7 ✓			↓	↓	↓
S497	3268.8	3268.9 ✓			—		
S498	3276.2	3276.4 ✓			05-17-23	0552WS002E	2
S499	3292.8	3292.7 ✓					
S500	3352.3	3352.4 ✓					
S501	3416.3	3416.5 ✓			05/16/23	0123WM014E	8
S502	3418.5	3418.6 ✓			05/11/23	0123WM014E	7
S503	4101.3	4101.2 ✓			↓	↓	↓
S504	3365.5	3365.3 ✓			05/16/23	0123WM014E	8
S505							
S506							
S507							
S508							
	Initials: RT	Initials: RT	Initials:	Initials:			

NOT MADE

Final Technician Signature: [signature] Date: 05-30-2023 Evaluator signature: [signature]

Control No. P-SFDP-0002.xls, Effective date: 2/1/2017

Calibrations

ASTM E2515, ASTM E2780

ID #	Lab Name/Purpose	Log Name	Attachment Type
255	10 lb Weight	Weight Standard, 10 lb.	Calibration Certificate (07/06/2021)
185	Platform Scale	WI-127	Calibration Certificate 09/01/2022
716	Digital Barometer	Traceable Barometer	Calibration Certificate (04/19/2022)
283A	Audit Weights	Troemner 21pc Msas Set	Calibration Certificate (10/26/2018)
335	Sample Box / Dry Gas Meter	Apex Automated Emissions Sampling Box	Calibration Log (10/25/2022), (04/27/2023)
336	Sample Box / Dry Gas Meter	Apex Automated Emissions Sampling Box	Calibration Log (10/25/2022), (04/27/2023)
410	Microtector	Dwyer Microtector	Calibration Certificate (03/01/2022)
721	Dwyer Anemometer	Dwyer Anemometer	Calibration Certificate (12/05/2022)
709	RH-81 Humidity Meter	RH-81 Humidity Meter	Calibration Log (03/06/2023)
594	Combustion Gas Analyzer	CAI Gas Analyzer	See Run Sheet (VBU)
637	Milligram Balance	Analytical Balance - Mettler - Toledo	Calibration Certificate (01/30/2023)
322	Ambient Dry Gas Meter	MC563 Source Sampler	Calibration Log (01/18/2023)
353	Scale (lbs)	MTW-150K	Calibration Verification (11/30/2022)
431	Moisture Calibrator	Delmhorst moisture Content Standard	Calibration Certificate (11/12/2022)

*ASTM E2515 requires that calibrations of barometers be performed on a semi-annual basis (mercury barometers are exempt), The calibration of the barometer used in the testing of the appliance described in this report was calibrated with an annual calibration due date. The testing described in this report occurred after what would have been the due date for a 6- month calibration cycle. The succeeding calibration performed by an ISO-accredited calibration laboratory reported that the device was received “Within Tolerance”. This calibration has been added to this report as supporting evidence that the device was accurate and in good working at the time of testing.

Certificate of Calibration

Certificate Number: 749605

JJ Calibrations, Inc.
7724 SE Aspen Summit Drive
Portland, OR 97266-9217
Phone 503.786.3005
FAX 503.786.2994

Omni-Test Laboratories
13327 NE Airport Way
Portland, OR 97230

ACCREDITED
0723.01
Calibration

PO: 210356
Order Date: 05/28/2021
Authorized By: N/A

Property #: OMNI-00255
User: N/A
Department: N/A
Make: Rice Lake
Model: 10 Lbs. (Class F)
Serial #: OMNI-00255
Description: Mass
Procedure: DCN 500901
Accuracy: Class F (±450mg)

Calibrated on: 07/06/2021
*Recommended Due: 07/06/2026
Environment: 20 °C 52 % RH
* As Received: Within Tolerance
* As Returned: Within Tolerance
Action Taken: Calibrated
Technician: 126

Remarks: * Many factors may cause the unit to drift out of calibration before the recommended due date. Any reported error is the absolute value between the reference and the unit. Uncertainties include the effects of the unit.

This mass meets class F specifications.
Received/returned without accessories.

Standards Used

Std ID	Manufacturer	Model	Nomenclature	Due Date	Trace ID
256A	Rice Lake	W0133K	Mass Set,	09/18/2022	741788
484A	Rice Lake	1kg-10kg (Class ASTM 1)	Mass Set,	07/02/2023	748551
550A	And (A&D) Co.	HP-30K	Balance 30 Kg	12/31/2021	739307

Measurement Data

Parameter / Measurement Description	Range	Unit	Reference	Min	Max	*Error	UUT	Uncertainty
Before/After								Accredited = ü
Mass								
10 Lbs.		g	4535.92400000	4535.47400000	4536.3740000	0.2288327	4536.1528327 g	3.5E-01 ü

This instrument has been calibrated in accordance with the JJ Calibrations Quality Assurance Manual and is traceable to either the SI or to National Institute of Standards and Technology (NIST). The quality system and this certificate are in compliance with ANSI/NCSL Z540-1-1994, ISO/IEC 17025-2017, ISO 10012-1, the ISO 9000 family and QS 9000. The expanded uncertainties of measurements for this calibration are based upon 95% (2 sigma) confidence limits. Unless stated in the comments, certificates reflect the "Simple Acceptance Rule" as specified by JCGM 106:2012. Unless otherwise stated, a test accuracy ratio (TAR) of 4:1, if achievable, is maintained. The results reported herein apply only to the calibration of the item described above. This report may not be reproduced, except in full, without written approval of JJ Calibrations.

Reviewer

3 Issued 07/08/2021 Rev # 15

Inspector

QUALITY CONTROL SERVICES

LABORATORY EQUIPMENT • SALES • SERVICE • CALIBRATION • REPAIRS

2340 SE 11TH Ave. Portland, Oregon 97214 • Box 14831 Portland, Oregon 97293

(503) 236-2712 • FAX (503) 235-2535 • www.qc-services.com

Established 1974

ACCREDITED

CERTIFICATE #1550.01

OMNI-Test Laboratories, Inc.
13327 NE Airport Way
Portland, OR 97230

Report Number: OMNE03005547220901

A2LA ACCREDITED
CERTIFICATE OF CALIBRATION WITH DATA

INSTRUMENT INFORMATION

Item	Make	Model	Serial Number	Customer ID	Location
Scale	Weigh-Tronix	WI-127 1000x0.1lb	005547	185	Lab
Units	**Readability**	**SOP**	**Cal Date**	**Last Cal Date**	**Cal Due Date**
lbs	0.1	QC033	9/1/22	9/21/21	9/2023

FUNCTIONAL CHECKS

SHIFT TEST	LINEARITY	REPEATABILITY	ENVIRONMENTAL CONDITIONS
Test Wt: 500 / Tol: 0.5	Test Wt: HB44 / Tol: HB44	Test Wt: 200 / Tol: 0.2	☐ Good ☑ Fair ☐ Poor
As-Found: Pass:☑ Fail:☐	As-Found: Pass:☑ Fail:☐	As-Found: Pass:☑ Fail:☐	Temperature: 23.8°C
As-Left: Pass:☑ Fail:☐	As-Left: Pass:☑ Fail:☐	As-Left: Pass:☑ Fail:☐	

CALIBRATION DATA

Standard	As-Found	As-Left	Expanded Uncertainty
1000	1000.2	1000.2	0.05
700	700.2	700.2	0.05
500	500.1	500.1	0.05
200	200.0	200.0	0.05
100	100.0	100.0	0.05
50	50.0	50.0	0.05

CALIBRATION STANDARDS

Item	Make	Model	Serial Number	Cal Date	Cal Due Date	NIST ID
Avoirdupois Cast W	Rice Lake	25 and 50lb	PWO990-CA	7/18/22	7/2024	20221688

Permanent Information Concerning this Equipment:

Old s/n 21676

Comments/Information Concerning this Calibration

9/22 RH= 56%.

Report prepared/reviewed by: JC **Date:** 9/1/22 **Technician:** J. Colacchio **Signature:**

THIS CERTIFICATE SHALL NOT BE REPRODUCED, EXCEPT IN FULL, WITHOUT THE APPROVAL OF QUALITY CONTROL SERVICES, INC.

The uncertainty is calculated according to the ISO Guide to the Expression of Uncertainty in Measurement and includes the uncertainty of standards used combined with the observed standard deviation of the unit under test. The uncertainty is expanded with a k factor of 2 for an approximate 95% level of confidence. Instruments listed above were calibrated using standards traceable to the National Institute of Standards and Technology (NIST). Calibration data reflect results at the time and location of calibration. Calibration data should be reviewed to insure that the instrument is performing to its required accuracy. Calibrations comply with ISO/IEC 17025 and ANSI/Z540-1-1994 quality standards.

Member: National Conference of Standards Laboratories and Weights & Measures

PT ID: OMNE03

ilac-MRA A2LA ACCREDITED A2LA Certificate No. 1750.01 Calibration

Calibration complies with ISO/IEC 17025, ANSI/NCSL Z540-1, and 9001

Cert. No.: 6530-13314053

Traceable® Certificate of Calibration for Digital Barometer

Manufactured for and distributed by : Traceable® Products 12554 Galveston Rd B230, Webster, TX 77598

Instrument Identification:

Model: 6530,68000-49 S/N: 221461635 Manufacturer: Control Company

Standards/Equipment:

Description	Serial Number	Due Date	NIST Traceable Reference
Digital Barometer	D4540001	29 Nov 2022	1000474068
Chilled Mirror Hygrometer	44654/2H3737	13 Dec 2023	19994
Climate Chamber	W619.0019		
Digital Thermometer	210888692	18 Oct 2022	12739668

Certificate Information:

Technician: 57 Procedure: CAL-31 Cal Date: 19 Apr 2022 Cal Due Date: 19 Apr 2024

Test Conditions: 48.96%RH 24.99°C 1020mBar

Calibration Data: (New Instrument)

Unit(s)	Nominal	As Found	In Tol	Nominal	As Left	In Tol	Min	Max	±U	TUR
%RH	N.A.	N.A.		50.02	51	Y	47	53	0.74	>4:1
°C	N.A.	N.A.		25.24	25.2	Y	24.84	25.64	0.05	>4:1
mb/hPa	N.A.	N.A.		805.26	806	Y	801	809	0.62	>4:1
mb/hPa	N.A.	N.A.		910.02	911	Y	906	914	0.62	>4:1
mb/hPa	N.A.	N.A.		1014.65	1015	Y	1011	1019	0.62	>4:1

This certificate indicates Traceability to standards provided by (NIST) National Institute of Standards and Technology and/or a National Standards Laboratory.

A Test Uncertainty Ratio of at least 4:1 is maintained unless otherwise stated and is calculated using the expanded measurement uncertainty. Uncertainty evaluation includes the instrument under test and is calculated in accordance with the ISO "Guide to the Expression of Uncertainty in Measurement : (GUM). The uncertainty represents an expanded uncertainty using a coverage factor k=2 to approximate a 95% confidence level. In tolerance conditions are based on test results falling within specified limits with no reduction by the uncertainty of the measurement. The results contained herein relate only to the item calibrated. This certificate shall not be reproduced except in full, without written approval of Control Company.

Nominal=Standard's Reading; As Left=Instrument's Reading; In Tol=In Tolerance; Min/Max=Acceptance Range; ± U=Expanded Measurement Uncertainty; TUR=Test Uncertainty Ratio; Accuracy=±(Max-Min)/2; Min=As Left Nominal(Rounded) – Tolerance; Max= As Left Nominal(Rounded) + Tolerance;

Nicol Rodriguez

Nicol Rodriguez, Quality Manager

Marisa Elms

Marisa Elms, Technical Manager

Note :

Maintaining Accuracy:

In our opinion once calibrated your Digital Barometer should maintain its accuracy. There is no exact way to determine how long calibration will be maintained. Digital Barometer change little, if any at all, but can be affected by aging, temperature, shock, and contamination.

Recalibration:

For factory calibration and re-certification traceable to National Institute of Standards and Technology contact Control Company.

Issue Date : 19 Apr 2022

CONTROL COMPANY 12554 Galveston RD Suite B230 Webster TX USA 77598
Phone 281 482-1714 Fax 281 482-9448 sales@control3.com www.traceable.com

Control Company is an ISO/IEC 17025:2017 Calibration Laboratory Accredited by (A2LA) American Association for Laboratory Accreditation, Certificate No. 1750.01.
Control Company is ISO 9001:2015 Quality Certified by DNV GL, Certificate No. CERT-01805-2006-AQ-HOU-ANAB.
International Laboratory Accreditation Cooperation - Multilateral Recognition Arrangement (ILAC-MRA).

Traceable® is a registered trademark of Control Company

© 2017 Control Company

Certificate of Calibration

Certificate Number: 804454

JJ Calibrations, Inc.
7724 SE Aspen Summit Drive
Portland, OR 97266-9217
Phone 503.786.3005
FAX 503.786.2994

Omni-Test Laboratories
13327 NE Airport Way
Portland, OR 97230

PO: 230456
Order Date: 10/24/2023
Authorized By: N/A

ACCREDITED
CERT # 0723.01

Property #: OMNI-00716
User: N/A
Department: N/A
Make: Control Company
Model: 6530
Serial #: 221461635
Description: Thermohygrometer / Barometer
Procedure: 403406
Accuracy: ±3%RH, ±.4°C(0.8°F), ±4mbar

Calibrated on: 10/25/2023
*Recommended Due: 04/25/2024
Environment: 23 °C 40 % RH
* As Received: Within Tolerance
* As Returned: Within Tolerance
Action Taken: Calibrated
Technician: 40

Remarks: * Many factors may cause the unit to drift out of calibration before the recommended due date. Any reported error is the absolute value between the reference and the unit. Uncertainties include the effects of the unit.

Standards Used

Std ID	Manufacturer	Model	Nomenclature	Due Date	Trace ID
925A	RH Systems	CGS-240	Humidity Generator	02/22/2024	789080
847A	Fluke	RPM4	Reference Pressure Monitor	06/01/2024	787534

Measurement Data

Parameter / Measurement Description	Range	Unit	Reference	Min	Max	*Error	UUT	Uncertainty	Accredited = Ü
Before/After									
Humidity									
	25	%	25.0150	22.015	28.015	0.015	25.000	6E-01	Ü
	50	%	49.9920	46.992	52.992	0.992	49.000	6E-01	Ü
	75	%	75.0010	72.001	78.001	0.899	75.900	6E-01	Ü
Temperature									
	20	℃	20.0440	19.644	20.444	0.244	19.800	7.5E-02	Ü
	30	℃	29.9960	29.596	30.396	0.096	29.900	7.5E-02	Ü
	50	℃	50.0160	49.616	50.416	0.116	49.900	7.5E-02	Ü
Barometer									
		mbar	29.613780	25.61378	33.61378	0.01622	29.63000	1.8E-01	Ü

This instrument has been calibrated in accordance with the JJ Calibrations Quality Assurance Manual and is traceable to the SI through an NMI such as but not limited to National Institute of Standards and Technology (NIST). The quality system and this certificate are in compliance with ANSI/NCSL Z540-1-1994, ISO/IEC 17025-2017, ISO 10012-1, the ISO 9000 family and QS 9000. The expanded uncertainties of measurements for this calibration are based upon 95% (2 sigma) confidence limits. Unless stated in the comments, certificates reflect the "Simple Acceptance Rule" as specified by ILAC G8:2019. Unless otherwise stated, a test uncertainty ratio (TUR) of 4:1, if achievable, is maintained. The results reported herein apply only to the calibration of the item described above. This report may not be reproduced, except in full, without written approval of JJ Calibrations.

Reviewer

3 Issued 10/26/2023 Rev # 15

Inspector

Certificate of Calibration

Certificate Number: **685888**

JJ Calibrations, Inc.
7007 SE Lake Rd
Portland, OR 97267-2105
Phone 503.786.3005
FAX 503.786.2994

Omni-Test Laboratories
13327 NE Airport Way
Portland, OR 97230

ACCREDITED
0723.01
Calibration

PO: **180188**
Order Date: 10/09/2018
Authorized By: **N/A**

Property #: OMNI-00283A
User: N/A
Department: N/A
Make: Troemner Inc
Model: 1mg-100g (Class F)
Serial #: 47883
Description: Mass Set, 21pc
Procedure: DCN 500901
Accuracy: Class F

Calibrated on: 10/26/2018
*Recommended Due: 10/26/2023
Environment: **20** °C **57** % RH
* As Received: Within Tolerance
* As Returned: Within Tolerance
Action Taken: Calibrated
Technician: **139**

Remarks: * Many factors may cause the unit to drift out of calibration before the recommended due date. Any reported error is the absolute value between the reference and the unit. Uncertainties include the effects of the unit.

This set meets Class F specifications.
Received and returned eight (8) masses in a black case secured by a rubber band.

Standards Used

Std ID	Manufacturer	Model	Nomenclature	Due Date	Trace ID
723A	Rice Lake	1mg-200g (Class 0)	Mass Set,	03/23/2019	668240
800A	Sartorius	MSA225W100DI	Analytical Balance	12/11/2018	663857

Measurement Data

Parameter / Measurement Description	Range Unit	Reference	Min	Max	ᵏError	UUT	Uncertainty
Before/After							Accredited = ✓
Mass							
Dot	200 mg	200.00030	199.4603	200.5403	0.0500	200.0503 mg	6.2E-01 ✓
	1 g	1.00000880	0.9991088	1.0009088	0.0000000	1.0000088 g	1E-03 ✓
	2 g	2.00001470	1.9989147	2.0011147	0.0003250	2.0003397 g	1.3E-03 ✓
	5 g	5.00000840	4.9985084	5.0015084	0.0000400	4.9999684 g	1.7E-03 ✓
	10 g	10.0000100	9.998010	10.002010	0.000245	9.999765 g	2.3E-03 ✓
Dot	20 g	20.0000140	19.996014	20.004014	0.000990	20.001004 g	4.6E-03 ✓
	50 g	49.9999660	49.989966	50.009966	0.000595	49.999371 g	1.1E-02 ✓
	100 g	100.000000	99.98000	100.02000	0.00194	99.99806 g	2.3E-02 ✓

JJ Calibrations, Inc. certifies that this instrument has been calibrated in accordance with the JJ Calibrations Quality Assurance Manual with the stated procedure using standards that are traceable to the National Institute of Standards and Technology (NIST), or other National Measurement Institutes (NMI's), or by using natural physical constants, intrinsic standards or ratio calibration techniques. The quality system and this certificate are in compliance with ANSI/NCSL Z540-1-1994, ISO/IEC 17025-2005, ISO 10012-1, the ISO 9000 family and QS 9000. The expanded uncertainties of measurements for this calibration are based upon 95% (2 sigma) confidence limits. Unless otherwise stated, a test accuracy ratio (TAR) of 4:1, if achievable, is maintained. The results reported herein apply only to the calibration of the item described above. This report may not be reproduced, except in full, without prior written consent of JJ Calibrations, Inc.
JJ Calibrations, Inc. quality system has been assessed and accredited to ISO/IEC 17025:2005.

Reviewer

3 Issued 10/29/2018 Rev # 15

Inspector

Thermal Metering System Calibration
Y Factor

Manufacturer:	Apex
Model:	XC-60-EP
Serial Number:	606001
OMNI Tracking No.:	OMNI-00335
Calibrated Orifice:	☐ Yes

Average Gas Meter y Factor	Orifice Meter dH@
1.004	N/A

Calibration Date:	10/25/22	
Calibrated by:	Tony Tong	
Calibration Frequency:	Six Month	
Next Calibration Due:	4/25/2023	
Instrument Range:	1.000	cfm
Standard Temp.:	68	oF
Standard Press.:	29.92	"Hg
Barometric Press., Pb:	30.23	"Hg
Signature/Date:	Tony Tong / 10/25/2022	

Previous Calibration Comparision

Date	5/10/2022	Acceptable Deviation (5%)	Deviation
y Factor	1.003	0.05015	0.001
Acceptance	Acceptable		

Current Calibration

Acceptable y Deviation	0.020
Maximum y Deviation	0.006
Acceptable dH@ Deviation	N/A
Maximum dH@ Deviation	N/A
Acceptance	Acceptable

Reference Standard *			
Standard Calibrator	Model	Standard Test Meter	
	S/N	OMNI-00001	
	Calib. Date	10-Dec-21	
	Calib. Value	0.9980	y factor (ref)

Calibration Parameters	Run 1	Run 2	Run 3
Reference Meter Pressure ("H2O), Pr	0.00	0.00	0.00
DGM Pressure ("H2O), Pd	2.00	1.26	1.00
Initial Reference Meter	441.224	430.613	435.76
Final Reference Meter	446.524	435.76	441.224
Initial DGM	0	0	0
Final DGM	5.455	5.33	5.682
Temp. Ref. Meter (°F), Tr	65.7	65.5	65.6
Temperature DGM (°F), Td	90.0	88.0	89.0
Time (min)	27.0	33.0	39.5
Net Volume Ref. Meter, Vr	5.300	5.147	5.464
Net Volume DGM, Vd	5.455	5.33	5.682
Gas Meter y Factor =	**1.010**	**1.002**	**1.000**
Gas Meter y Factor Deviation (from avg.)	0.006	0.002	0.004
Orifice dH@	**N/A**	**N/A**	**N/A**
Orifice dH@ Deviation (from avg.)	N/A	N/A	N/A

where:

1. Deviation = |Average value for all runs - current run value|

** 2. y = [Vr x (y factor (ref)) x (Pb + (Pr/ 13.6)) x (Td + 460)]/ [Vd x (Pb + (Pd / 13.6)) x (Tr + 460)]

** 3. dH@ = 0.0317 x Pd / (Pb (Td + 460)) x [(Tr + 460) x time) / Vr]^2

* Reference calibration is traceable to NIST through NIST Test # 40674, Kimble ASTM E1272, or NIST traceable laboratory

** Equations come from EPA Method 5

DIFFERENTIAL PRESSURE GAUGE CALIBRATION DATA SHEET

Instrument to be calibrated: Pressure Transducer (Draft)

Maximum Range: 0 – 1" H_2O ID Number: OMNI-00335

Calibration Instrument: Digital Manometer ID Number: OMNI-00633

Date: 10/24/2022 By: Tony Tong

This form is to be used only in conjunction with Standard Procedure C-SPC.

Range of Calibration Point ("WC)	Digital Manometer Input ("WC)	Pressure Gauge Response ("WC)	Difference | Input – Response |	% Error of Full Span*
0-20% Max. Range 0.0 – 0.2	0.109	0.104	0.005	0.5
20-40% Max. Range 0.2– 0.4	0.263	0.252	0.011	1.1
40-60% Max. Range 0.4 – 0.6	0.452	0.440	0.012	1.2
60-80% Max. Range 0.6 – 0.8	0.650	0.635	0.015	1.5
80-100% Max. Range 0.8 – 1.0	0.955	0.935	0.020	2.0

*Acceptable tolerance is 4%.

Technician signature: Tony Tong Date: 10/25/2022

Reviewed by: K. J. Morgan Date: 11/01/22

Temperature Calibration EPA Method 28 R, ASTM 2515		
Booth:	Temperature Monitor Type:	Equipment Number:
E 1	National Instruments Logger	00335, 00336

Reference Meter Number: 00373		Calibration Due Date: 10/20/2022	
Calibration Performed By:	Date:	Ambient Temperature(F°):	Barometric Pressure(inHg):
Tony Tong	10/18/2022	72.7	30.16

Input Temp (°F)	Ambient	Meter A	Meter B	Filter A	Filter B	Tunnel	FB Interior
0	1	1	1	1	1	0	0
100	101	101	101	101	101	100	100
300	301	300	301	301	301	300	300
500	501	501	501	501	501	500	500
700	701	701	701	701	701	700	700
1000	1001	1001	1001	1001	1001	1000	1000
1500	1501	1501	1501	1501	1501	1501	1501
2000	2001	2001	2001	2001	2001	2001	2001

Input (°F)	FB Top	FB Bottom	FB Back	FB Left	FB Right	Imp A	Imp B	Cat	Stack
0	0	0	0	0	0	0	1	0	0
100	100	100	100	100	100	100	101	100	100
300	300	300	300	300	300	300	301	300	300
500	500	500	500	500	500	501	501	501	500
700	700	700	700	700	700	701	701	701	700
1000	1000	1000	1000	1000	1000	1001	1001	1001	1000
1500	1501	1501	1501	1501	1501	1501	1501	1501	1501
2000	2001	2001	2001	2001	2001	2001	2001	2001	2001

Technician Signature: Tony Tong Date: 10/25/2022

Reviewed By: Ken Morgan Date: 11/01/22

Thermal Metering System Calibration
Y Factor

Manufacturer:	Apex
Model:	XC-60-EP
Serial Number:	606001
OMNI Tracking No.:	OMNI-00335
Calibrated Orifice:	☐ Yes

Average Gas Meter y Factor	Orifice Meter dH@
1.007	N/A

Calibration Date:	04/27/23	
Calibrated by:	Tony Tong	
Calibration Frequency:	Six Month	
Next Calibration Due:	10/27/2023	
Instrument Range:	1.000	cfm
Standard Temp.:	68	oF
Standard Press.:	29.92	"Hg
Barometric Press., Pb:	30.19	"Hg
Signature/Date:	Tony Tong / 04/27/2023	

Previous Calibration Comparision

Date	10/25/2022	Acceptable Deviation (5%)	Deviation
y Factor	1.004	0.0502	0.003
Acceptance	Acceptable		

Current Calibration

Acceptable y Deviation	0.020
Maximum y Deviation	0.005
Acceptable dH@ Deviation	N/A
Maximum dH@ Deviation	N/A
Acceptance	Acceptable

Reference Standard *			
Standard Calibrator	Model	Standard Test Meter	
	S/N	OMNI-00330	
	Calib. Date	13-Apr-23	
	Calib. Value	1.0017	y factor (ref)

Calibration Parameters	Run 1	Run 2	Run 3
Reference Meter Pressure ("H2O), Pr	0.00	0.00	0.00
DGM Pressure ("H2O), Pd	2.00	1.29	1.00
Initial Reference Meter	25.565	31.22	38
Final Reference Meter	30.982	37.935	45.037
Initial DGM	0	0	0
Final DGM	5.354	6.694	7.034
Temp. Ref. Meter (°F), Tr	68.0	68.5	69.1
Temperature DGM (°F), Td	70.0	71.0	71.0
Time (min)	27.0	42.0	50.0
Net Volume Ref. Meter, Vr	5.417	6.715	7.037
Net Volume DGM, Vd	5.354	6.694	7.034
Gas Meter y Factor =	**1.012**	**1.006**	**1.003**
Gas Meter y Factor Deviation (from avg.)	0.005	0.001	0.004
Orifice dH@	**N/A**	**N/A**	**N/A**
Orifice dH@ Deviation (from avg.)	N/A	N/A	N/A

where:

1. Deviation = |Average value for all runs - current run value|

** 2. y = [Vr x (y factor (ref)) x (Pb + (Pr/ 13.6)) x (Td + 460)]/ [Vd x (Pb + (Pd / 13.6)) x (Tr + 460)]

** 3. dH@ = 0.0317 x Pd / (Pb (Td + 460)) x [(Tr + 460) x time) / Vr]^2

* Reference calibration is traceable to NIST through NIST Test # 40674, Kimble ASTM E1272, or NIST traceable laboratory

** Equations come from EPA Method 5

DIFFERENTIAL PRESSURE GAUGE CALIBRATION DATA SHEET

Instrument to be calibrated: Pressure Transducer (Flue Draft)

Maximum Range: 0 – 1" H_2O ID Number: OMNI-00335

Calibration Instrument: Digital Manometer ID Number: OMNI-00633

Date: 03/27/2023 By: Tony Tong

This form is to be used only in conjunction with Standard Procedure C-SPC.

Range of Calibration Point ("WC)	Digital Manometer Input ("WC)	Pressure Gauge Response ("WC)	Difference | Input – Response |	% Error of Full Span*
0-20% Max. Range 0.0 – 0.2	0.089	0.091	0.002	0.2
20-40% Max. Range 0.2– 0.4	0.305	0.307	0.002	0.2
40-60% Max. Range 0.4 – 0.6	0.525	0.518	0.007	0.7
60-80% Max. Range 0.6 – 0.8	0.736	0.743	0.007	0.7
80-100% Max. Range 0.8 – 1.0	0.914	0.909	0.005	0.5

*Acceptable tolerance is 4%.

Technician signature: Tony Tong Date: 03/27/2023

Reviewed by: _____ Date: _____

Temperature Calibration EPA Method 28 R, ASTM 2515		
Booth:	Temperature Monitor Type:	Equipment Number:
E 1	National Instruments Logger	00335, 00336

Reference Meter Number: 00373		Calibration Due Date: 10/23/2023	
Calibration Performed By:	Date:	Ambient Temperature(F°):	Barometric Pressure(inHg):
Tony Tong	03/28/2023	58	29.72

Input Temp (°F)	Ambient	Meter A	Meter B	Filter A	Filter B	Tunnel	FB Interior
0	0	0	0	0	0	0	0
100	100	100	100	100	100	100	100
300	300	300	300	300	300	300	300
500	500	500	500	500	500	500	500
700	700	700	700	700	700	700	700
1000	1000	1000	1000	1000	1000	1000	1000
1500	1500	1500	1500	1500	1500	1500	1500
2000	2000	2001	2001	2000	2000	2000	2000

Input (°F)	FB Top	FB Bottom	FB Back	FB Left	FB Right	Imp A	Imp B	Cat	Stack
0	-1	0	0	0	0	0	0	0	-1
100	100	100	100	100	100	100	100	100	100
300	300	300	300	300	300	300	300	300	300
500	500	500	500	500	500	500	500	500	500
700	700	700	700	700	700	700	700	700	700
1000	1000	1000	1000	1000	1000	1000	1000	1000	1000
1500	1500	1500	1500	1500	1500	1500	1500	1500	1500
2000	2000	2000	2000	2000	2000	2001	2001	2000	2000

Technician Signature: Tony Tong Date: 03/28/2023

Reviewed By:_____ Date: _____

Thermal Metering System Calibration
Y Factor

Manufacturer:	Apex
Model:	XC-60-EP
Serial Number:	606002
OMNI Tracking No.:	OMNI-00336
Calibrated Orifice:	☐ Yes

Average Gas Meter y Factor	Orifice Meter dH@
1.002	N/A

Calibration Date:	10/25/22	
Calibrated by:	Tony Tong	
Calibration Frequency:	Six Month	
Next Calibration Due:	4/25/2023	
Instrument Range:	1.000	cfm
Standard Temp.:	68	oF
Standard Press.:	29.92	"Hg
Barometric Press., Pb:	30.23	"Hg
Signature/Date:	Tony Tong	/ 10/25/2022

Previous Calibration Comparision

Date	5/10/2022	Acceptable Deviation (5%)	Deviation
y Factor	1.003	0.05015	0.001
Acceptance	Acceptable		

Current Calibration

Acceptable y Deviation	0.020
Maximum y Deviation	0.002
Acceptable dH@ Deviation	N/A
Maximum dH@ Deviation	N/A
Acceptance	Acceptable

Reference Standard *			
Standard Calibrator	Model	Standard Test Meter	
	S/N	OMNI-00001	
	Calib. Date	10-Dec-21	
	Calib. Value	0.9980	y factor (ref)

Calibration Parameters	Run 1	Run 2	Run 3
Reference Meter Pressure ("H2O), Pr	0.00	0.00	0.00
DGM Pressure ("H2O), Pd	2.00	1.20	0.80
Initial Reference Meter	405.712	410.979	416.378
Final Reference Meter	410.979	416.378	421.415
Initial DGM	0	0	0
Final DGM	5.244	5.493	5.208
Temp. Ref. Meter (°F), Tr	64.4	64.9	65.1
Temperature DGM (°F), Td	67.0	78.0	85.0
Time (min)	25.0	34.0	40.0
Net Volume Ref. Meter, Vr	5.267	5.399	5.037
Net Volume DGM, Vd	5.244	5.493	5.208
Gas Meter y Factor =	**1.002**	**1.002**	**1.000**
Gas Meter y Factor Deviation (from avg.)	0.001	0.001	0.002
Orifice dH@	**N/A**	**N/A**	**N/A**
Orifice dH@ Deviation (from avg.)	N/A	N/A	N/A

where:

1. Deviation = |Average value for all runs - current run value|

** 2. y = [Vr x (y factor (ref)) x (Pb + (Pr/ 13.6)) x (Td + 460)]/ [Vd x (Pb + (Pd / 13.6)) x (Tr + 460)]

** 3. dH@ = 0.0317 x Pd / (Pb (Td + 460)) x [(Tr + 460) x time) / Vr]^2

* Reference calibration is traceable to NIST through NIST Test # 40674, Kimble ASTM E1272, or NIST traceable laboratory

** Equations come from EPA Method 5

DIFFERENTIAL PRESSURE GAUGE CALIBRATION DATA SHEET

Instrument to be calibrated: Pressure Transducer (ΔP)

Maximum Range: 0 – 1" H_2O ID Number: OMNI-00336

Calibration Instrument: Digital Manometer ID Number: OMNI-00633

Date: 10/24/2022 By: Tony Tong

This form is to be used only in conjunction with Standard Procedure C-SPC.

Range of Calibration Point ("WC)	Digital Manometer Input ("WC)	Pressure Gauge Response ("WC)	Difference | Input – Response |	% Error of Full Span*
0-20% Max. Range 0.0 – 0.2	0.087	0.085	0.002	0.2
20-40% Max. Range 0.2– 0.4	0.231	0.233	0.002	0.2
40-60% Max. Range 0.4 – 0.6	0.471	0.466	0.005	0.5
60-80% Max. Range 0.6 – 0.8	0.747	0.750	0.003	0.3
80-100% Max. Range 0.8 – 1.0	0.982	0.986	0.004	0.4

*Acceptable tolerance is 4%.

Technician signature: Tony Tong Date: 10/25/2022

Reviewed by: K. A. Morgan Date: 11/01/22

Thermal Metering System Calibration
Y Factor

Manufacturer:	Apex
Model:	XC-60-EP
Serial Number:	606001
OMNI Tracking No.:	OMNI-00336
Calibrated Orifice:	☐ Yes

Average Gas Meter y Factor	Orifice Meter dH@
1.015	N/A

Calibration Date:	04/27/23	
Calibrated by:	Tony Tong	
Calibration Frequency:	Six Month	
Next Calibration Due:	10/27/2023	
Instrument Range:	1.000	cfm
Standard Temp.:	68	oF
Standard Press.:	29.92	"Hg
Barometric Press., Pb:	30.17	"Hg
Signature/Date:	Tony Tong	/ 04/27/2023

Previous Calibration Comparision

Date	10/25/2022	Acceptable Deviation (5%)	Deviation
y Factor	1.002	0.0501	0.013
Acceptance	Acceptable		

Current Calibration

Acceptable y Deviation	0.020
Maximum y Deviation	0.003
Acceptable dH@ Deviation	N/A
Maximum dH@ Deviation	N/A
Acceptance	Acceptable

Reference Standard *			
Standard Calibrator	Model	Standard Test Meter	
	S/N	OMNI-00330	
	Calib. Date	13-Apr-23	
	Calib. Value	1.0017	y factor (ref)

Calibration Parameters	Run 1	Run 2	Run 3
Reference Meter Pressure ("H2O), Pr	0.00	0.00	0.00
DGM Pressure ("H2O), Pd	2.00	1.00	0.80
Initial Reference Meter	45.723	51.302	56.688
Final Reference Meter	51.24	56.57	62.309
Initial DGM	0	0	0
Final DGM	5.45	5.282	5.638
Temp. Ref. Meter (°F), Tr	69.5	69.6	70.0
Temperature DGM (°F), Td	74.0	78.0	80.0
Time (min)	25.0	33.0	39.0
Net Volume Ref. Meter, Vr	5.517	5.268	5.621
Net Volume DGM, Vd	5.45	5.282	5.638
Gas Meter y Factor =	**1.018**	**1.012**	**1.016**
Gas Meter y Factor Deviation (from avg.)	0.002	0.003	0.000
Orifice dH@	**N/A**	**N/A**	**N/A**
Orifice dH@ Deviation (from avg.)	N/A	N/A	N/A

where:

1. Deviation = |Average value for all runs - current run value|

** 2. y = [Vr x (y factor (ref)) x (Pb + (Pr/ 13.6)) x (Td + 460)]/ [Vd x (Pb + (Pd / 13.6)) x (Tr + 460)]

** 3. dH@ = 0.0317 x Pd / (Pb (Td + 460)) x [(Tr + 460) x time) / Vr]^2

* Reference calibration is traceable to NIST through NIST Test # 40674, Kimble ASTM E1272, or NIST traceable laboratory

** Equations come from EPA Method 5

DIFFERENTIAL PRESSURE GAUGE CALIBRATION DATA SHEET

Instrument to be calibrated: Pressure Transducer (ΔP)

Maximum Range: 0 – 1" H_2O ID Number: OMNI-00336

Calibration Instrument: Digital Manometer ID Number: OMNI-00633

Date: 03/27/2023 By: Tony Tong

This form is to be used only in conjunction with Standard Procedure C-SPC.

Range of Calibration Point ("WC)	Digital Manometer Input ("WC)	Pressure Gauge Response ("WC)	Difference | Input – Response |	% Error of Full Span*
0-20% Max. Range 0.0 – 0.2	0.111	0.114	0.003	0.3
20-40% Max. Range 0.2– 0.4	0.308	0.309	0.001	0.1
40-60% Max. Range 0.4 – 0.6	0.458	0.473	0.015	1.5
60-80% Max. Range 0.6 – 0.8	0.726	0.721	0.005	0.5
80-100% Max. Range 0.8 – 1.0	0.927	0.925	0.002	0.2

*Acceptable tolerance is 4%.

Technician signature: Tony Tong Date: 03/27/2023

Reviewed by: _____ Date: _____

Temperature Calibration EPA Method 28 R, ASTM 2515		
Booth:	Temperature Monitor Type:	Equipment Number:
E 1	National Instruments Logger	00335, 00336

Reference Meter Number: 00373		Calibration Due Date: 10/23/2023	
Calibration Performed By:	Date:	Ambient Temperature(F°):	Barometric Pressure(inHg):
Tony Tong	03/28/2023	58	29.72

Input Temp (°F)	Ambient	Meter A	Meter B	Filter A	Filter B	Tunnel	FB Interior
0	0	0	0	0	0	0	0
100	100	100	100	100	100	100	100
300	300	300	300	300	300	300	300
500	500	500	500	500	500	500	500
700	700	700	700	700	700	700	700
1000	1000	1000	1000	1000	1000	1000	1000
1500	1500	1500	1500	1500	1500	1500	1500
2000	2000	2001	2001	2000	2000	2000	2000

Input (°F)	FB Top	FB Bottom	FB Back	FB Left	FB Right	Imp A	Imp B	Cat	Stack
0	-1	0	0	0	0	0	0	0	-1
100	100	100	100	100	100	100	100	100	100
300	300	300	300	300	300	300	300	300	300
500	500	500	500	500	500	500	500	500	500
700	700	700	700	700	700	700	700	700	700
1000	1000	1000	1000	1000	1000	1000	1000	1000	1000
1500	1500	1500	1500	1500	1500	1500	1500	1500	1500
2000	2000	2000	2000	2000	2000	2001	2001	2000	2000

Technician Signature: Tony Tong Date: 03/28/2023

Reviewed By:_____ Date: _____

Certificate of Calibration

Certificate Number: 788484

JJ Calibrations, Inc.
7724 SE Aspen Summit Drive
Portland, OR 97266-9217
Phone 503.786.3005
FAX 503.786.2994

Omni-Test Laboratories
13327 NE Airport Way
Portland, OR 97230

PO: 230420
Order Date: 02/16/2023
Authorized By: N/A

Property #: OMNI-00410
User: N/A
Department: N/A
Make: Dwyer
Model: 1430
Serial #: OMNI-00410
Description: Microtector
Procedure: 500908
Accuracy: ±0.00025" WC

Calibrated on: 04/06/2023
*Recommended Due: 04/06/2024
Environment: 19 °C 37 % RH
* As Received: Limited
* As Returned: Limited
Action Taken: Calibrated
Technician: 111

Remarks: * Many factors may cause the unit to drift out of calibration before the recommended due date. Any reported error is the absolute value between the reference and the unit. Uncertainties include the effects of the unit.

Previous limitation of the micrometer head calibrated only, continued. Unit was received and returned in a case.

Standards Used

Std ID	Manufacturer	Model	Nomenclature	Due Date	Trace ID
913A	Starrett	SS88.A1	Gage Block Set, 88 Pieces	07/29/2023	776002

Measurement Data

Parameter / Measurement Description	Range	Unit	Reference	Min	Max	*Error	UUT	Uncertainty	Accredited = ü
Before/After									
Length									
		Inch	0.1300	0.129	0.131	0.000	0.130 Inch	2.5E-05	ü
		Inch	0.3850	0.384	0.386	0.000	0.385 Inch	2.5E-05	ü
		Inch	0.6150	0.614	0.616	0.000	0.615 Inch	2.5E-05	ü
		Inch	0.8700	0.869	0.871	0.000	0.870 Inch	2.5E-05	ü
		Inch	1.0000	0.999	1.001	0.000	1.000 Inch	2.5E-05	ü

This instrument has been calibrated in accordance with the JJ Calibrations Quality Assurance Manual and is traceable to either the SI or to National Institute of Standards and Technology (NIST). The quality system and this certificate are in compliance with ANSI/NCSL Z540-1-1994, ISO/IEC 17025-2017, ISO 10012-1, the ISO 9000 family and QS 9000. The expanded uncertainties of measurements for this calibration are based upon 95% (2 sigma) confidence limits. Unless stated in the comments, certificates reflect the "Simple Acceptance Rule" as specified by JCGM 106:2012. Unless otherwise stated, a test accuracy ratio (TAR) of 4:1, if achievable, is maintained. The results reported herein apply only to the calibration of the item described above. This report may not be reproduced, except in full, without written approval of JJ Calibrations.

Reviewer

3 Issued 04/07/2023 Rev # 15

Inspector

INNOCAL®
INNOVATIVE CALIBRATION SOLUTIONS

625 East Bunker Court
Vernon Hills, Illinois 60061
PH: 866-466-6225
Fax: 847-327-2993
www.innocalsolutions.com

NIST Traceable Calibration Report

REPORT NUMBER
1713519

Reference Number: MUB285900
PO Number: MUB285900

Cole-Parmer
625 E Bunker Ct
Vernon Hills, IL 60061-1844 United States

ilac-MRA
ACCREDITED
CERT #1746.01

Manufacturer:	Digi-Sense	**Calibration Date**	12/05/2022
Model Number:	20250-16	**Calibration Due Date**	
Description:	Air Velocity, Hot Wire Anemometer	**Condition As Found:**	Initial Calibration
Asset Number:	CP202636	**Condition As Left:**	In Tolerance, No adjustment
Serial Number:	220723100		
Procedure:	DS Digi-Sense 20250-16		

Remarks:
NIST-traceable calibration performed on the unit referenced above in accordance with customer requirements, published specifications and the lab's standard operating procedures. No adjustments were made to the unit. Recommended calibration due date is 12 months from date of purchase.

Standards Used

Standard ID	Manufacturer	Model Number	Description	Cal Date	Due Date
CP105979	Kanomax	X5602	Air Velocity, Wind Tunnel, Open Jet	5/11/2022	5/31/2023
CP105914	Fluke Corporation	1551A EX	Temperature, Stik Thermometer	7/26/2022	7/31/2023

Calibration Data

Function Tested	Nominal / Reference Value	Measured Value	OOT	Calibration Tolerance *g: = Guard Banding Applied*	TUR	EMU
Air Velocity Accuracy	5.00 m/s					
As Found & As Left	5.00	5.05		4.74 to 5.26 m/s	6.2:1	± 0.042 m/s
	10.00 m/s					
As Found & As Left	10.00	10.06		9.49 to 10.51 m/s	11:1	± 0.045 m/s
	15.00 m/s					
As Found & As Left	15.00	15.13		14.24 to 15.76 m/s	8.1:1	± 0.094 m/s
	20.00 m/s					
As Found & As Left	20.00	20.51		18.99 to 21.01 m/s	8.1:1	± 0.12 m/s
	25.00 m/s					
As Found & As Left	25.00	25.67		23.74 to 26.26 m/s	8.1:1	± 0.16 m/s
Temperature Accuracy	25.0 °C					
As Found & As Left	25.0	25.2		24.0 to 26.0 °C	13:1	± 0.077 °C

Temperature: 21 °C
Humidity: 21 %RH
Rpt. No.: 1713519

Calibration Performed By:				Quality Reviewer:	
Trevor Sass		Metrologist		James Alexander	12/5/2022
Name	ID #	Title	Phone	Name	Date

This report may not be reproduced, except in full, without written permission of Innocal. The results stated in this report relate only to the items tested or calibrated. Measurements reported herein are traceable to SI units via national standards maintained by NIST and were performed in compliance with MIL-STD-45662A, ANSI/NCSL Z540-1-1994, 10CFR50, Appendix B, ISO 9002-94, and ISO 17025:2017. Conformance based on Simple Acceptance as a Decision Rule. The estimated measurement uncertainty (EMU), if reported on this certificate, is being reported at a confidence level of 95% or K=2 unless otherwise noted in the remarks section.

Cole-Parmer® Traceable® DIGI-SENSE. OAKTON®

Certificate of Calibration

Certificate Number: 788485

JJ Calibrations, Inc.
7724 SE Aspen Summit Drive
Portland, OR 97266-9217
Phone 503.786.3005
FAX 503.786.2994

Omni-Test Laboratories
13327 NE Airport Way
Portland, OR 97230

PO: 230420
Order Date: 02/16/2023
Authorized By: N/A

Property #: OMNI-00709
User: N/A
Department: N/A
Make: Omega
Model: RH81
Serial #: 10361019
Description: Thermohygrometer
Procedure: DCN 401013/403410
Accuracy: RH ±3%, TEMP ±1°C(±1.8°F)

Calibrated on: 03/06/2023
*Recommended Due: 03/06/2028
Environment: 23 °C 35 % RH
* As Received: Within Tolerance
* As Returned: Within Tolerance
Action Taken: Calibrated
Technician: 173

Remarks: * Many factors may cause the unit to drift out of calibration before the recommended due date. Any reported error is the absolute value between the reference and the unit. Uncertainties include the effects of the unit.

Standards Used

Std ID	Manufacturer	Model	Nomenclature	Due Date	Trace ID
925A	RH Systems	CGS-240	Humidity Generator	02/22/2024	789080

Measurement Data

Parameter / Measurement Description	Range	Unit	Reference	Min	Max	*Error	UUT	Uncertainty	
Before/After								Accredited =	ü
Relative Humidity									
		RH	25.00	22.0	28.0	0.3	25.3 RH	6.3E-01	ü
		RH	50.00	47.0	53.0	1.3	48.7 RH	6.3E-01	ü
		RH	75.00	72.0	78.0	0.7	74.3 RH	6.3E-01	ü
Temperature									
		℃	20.0	19	21	0	20 ℃	2.8E-01	ü
		℃	30.00	29.0	31.0	0.6	29.4 ℃	2.8E-01	ü
		℃	40.60	39.6	41.6	0.4	40.2 ℃	2.8E-01	ü

This instrument has been calibrated in accordance with the JJ Calibrations Quality Assurance Manual and is traceable to either the SI or to National Institute of Standards and Technology (NIST). The quality system and this certificate are in compliance with ANSI/NCSL Z540-1-1994, ISO/IEC 17025-2017, ISO 10012-1, the ISO 9000 family and QS 9000. The expanded uncertainties of measurements for this calibration are based upon 95% (2 sigma) confidence limits. Unless stated in the comments, certificates reflect the "Simple Acceptance Rule" as specified by JCGM 106:2012. Unless otherwise stated, a test accuracy ratio (TAR) of 4:1, if achievable, is maintained. The results reported herein apply only to the calibration of the item described above. This report may not be reproduced, except in full, without written approval of JJ Calibrations.

Reviewer

3 Issued 03/08/2023 Rev # 15

Inspector

Established 1974

QUALITY CONTROL SERVICES

LABORATORY EQUIPMENT • SALES • SERVICE • CALIBRATION • REPAIRS
2340 SE 11TH Ave. Portland, Oregon 97214 • Box 14831 Portland, Oregon 97293
(503) 236-2712 • FAX (503) 235-2535 • www.qc-services.com

ACCREDITED
CERTIFICATE #1550.01

OMNI-Test Laboratories, Inc.
13327 NE Airport Way
Portland, OR 97230

Report Number: OMNE03B729400181230130

A2LA ACCREDITED
CERTIFICATE OF CALIBRATION WITH DATA

INSTRUMENT INFORMATION

Item	Make	Model	Serial Number	Customer ID	Location
Balance	Mettler	MS104TS	B729400181	OMNI-00637	Lab
Units	**Readability**	**SOP**	**Cal Date**	**Last Cal Date**	**Cal Due Date**
g	0.0001	qcs012	1/30/23	7/27/22	7/2023

FUNCTIONAL CHECKS

ECCENTRICITY
Test Wt: 50 Tol: 0.0001
As-Found: Pass: ☑ Fail: ☐
As-Left: Pass: ☑ Fail: ☐

LINEARITY
Test Wt: 20x4 Tol: 0.0001
As-Found: Pass: ☑ Fail: ☐
As-Left: Pass: ☑ Fail: ☐

STANDARD DEVIATION
Test Wt: 100 Tol: 0.0001

1. 100.0001	5. 100.0001	9. 100.0001
2. 100.0000	6. 100.0001	10. 100.0001
3. 100.0000	7. 100.0001	Result
4. 100.0001	8. 100.0000	0.00004

ENVIRONMENTAL CONDITIONS
☐ Good ☑ Fair ☐ Poor
Temperature: 18.4°C

A2LA ACCREDITED SECTION OF REPORT

Standard	As-Found	As-Left	Expanded Uncertainty
100	100.0004	100.0001	0.00016
80	80.0007	80.0000	0.00016
50	50.0005	50.0000	0.00015
20	20.0002	20.0000	0.00015
1	1.0000	1.0000	0.00015
0.1	0.0999	0.1000	0.00015

CALIBRATION STANDARDS

Item	Make	Model	Serial Number	Cal Date	Cal Due Date	NIST ID
Weight Set	Rice Lake	10 kg to 1 mg	D123	6/27/22	6/2023	20221503

Permanent Information Concerning this Equipment:

Comments/Info Concerning this Calibration:
1/23 - Cleaned, leveled, & adjusted span. RH = 40%

Report prepared/reviewed by: _____ **Date:** 1.30.23

Technician: D.Oudeans
Signature: _____

THIS CERTIFICATE SHALL NOT BE REPRODUCED WITHOUT THE APPROVAL OF QUALITY CONTROL SERVICES, INC.

The uncertainty is calculated according to the ISO Guide to the Expression of Uncertainty in Measurement and includes the uncertainty of standards used combined with the observed standard deviation and readability of the unit under test. The uncertainty is expanded with a k factor of 2 for an approximate 95% level of confidence. Instruments listed above were calibrated using standards traceable to the National Institute of Standards and Technology (NIST). Calibration data reflect results at the time and location of calibration. Calibration data should be reviewed to insure that the instrument is performing to its required accuracy. Calibrations comply with ISO/IEC 17025 and ANSI/Z540-1-1994 quality standards. Results relate only to the item(s) tested. Unless otherwise noted, statements of conformity do not include measurement

Member: National Conference of Standards Laboratories and Weights & Measures

PT ID: OMNE03

Quality Control Services
Report of Service and Calibration

2340 S.E. 11TH AVENUE
PORTLAND, OR 97214
PHONE 503-236-2712

72900

Sold To: OMNI-Test Laboratories, Inc. PT ID: OMNE03 P.O. No: 230418
Address: PO Box 301367 Contact: Michael Castillo
City: Portland, OR 97294 Phone: 503-643-3788
Ship To: 13327 NE Airport Way Portland, OR 97230 Email: mcastillo@omni-test.com

No	Item	Make	Model	Serial Number	Location	Contact	Rate	Date Svc'd 2023	Tech	Cust ID
1	Balance	Mettler	MS104TS	B729400181	Lab	Michael Castillo	$170.00	1·30	DC	

Service / Calibration Documentation Requirements
- ☐ Certificate of Calibration
- ☐ Calibration with Data
- ☒ A2LA Certificate

Received By: _____ Date: _____

Comments: _____

Thermal Metering System Calibration
Y Factor

Manufacturer:	Apex Instruments
Model:	MC563 Source Sampler
Serial Number:	601001
OMNI Tracking No.:	OMNI-00322
Calibrated Orifice:	☐ Yes

Average Gas Meter y Factor	Orifice Meter dH@
1.012	N/A

Calibration Date:	01/18/23	
Calibrated by:	Tony Tong	
Calibration Frequency:	Six Month	
Next Calibration Due:	7/18/2023	
Instrument Range:	1.000	cfm
Standard Temp.:	68	oF
Standard Press.:	29.92	"Hg
Barometric Press., Pb:	29.89	"Hg
Signature/Date:	Tony Tong	/ 01/18/2023

Previous Calibration Comparision

Date	7/19/2022	Acceptable Deviation (5%)	Deviation
y Factor	1.016	0.0508	0.004
Acceptance	Acceptable		

Current Calibration

Acceptable y Deviation	0.020
Maximum y Deviation	0.008
Acceptable dH@ Deviation	N/A
Maximum dH@ Deviation	N/A
Acceptance	Acceptable

Reference Standard *			
Standard Calibrator	Model	Standard Test Meter	
	S/N	OMNI-00001	
	Calib. Date	04-Jan-23	
	Calib. Value	0.9980	y factor (ref)

Calibration Parameters	Run 1	Run 2	Run 3
Reference Meter Pressure ("H2O), Pr	0.00	0.00	0.00
DGM Pressure ("H2O), Pd	2.00	1.00	0.25
Initial Reference Meter	509.738	519.784	525.827
Final Reference Meter	517.242	525.54	532.155
Initial DGM	0	0	0
Final DGM	7.296	5.662	6.299
Temp. Ref. Meter (°F), Tr	62.4	62.0	63.0
Temperature DGM (°F), Td	61.0	62.0	64.0
Time (min)	9.8	10.9	37.2
Net Volume Ref. Meter, Vr	7.504	5.756	6.328
Net Volume DGM, Vd	7.296	5.662	6.299
Gas Meter y Factor =	**1.019**	**1.012**	**1.004**
Gas Meter y Factor Deviation (from avg.)	0.007	0.001	0.008
Orifice dH@	**N/A**	**N/A**	**N/A**
Orifice dH@ Deviation (from avg.)	N/A	N/A	N/A

where:

1. Deviation = |Average value for all runs - current run value|

** 2. y = [Vr x (y factor (ref)) x (Pb + (Pr/ 13.6)) x (Td + 460)]/ [Vd x (Pb + (Pd / 13.6)) x (Tr + 460)]

** 3. dH@ = 0.0317 x Pd / (Pb (Td + 460)) x [(Tr + 460) x time) / Vr]^2

* Reference calibration is traceable to NIST through NIST Test # 40674, Kimble ASTM E1272, or NIST traceable laboratory

** Equations come from EPA Method 5

Calibration Sheet For MTW-150K S/N MKW04072 (OMNI-00353)

Date : 11/30/2022 Verified by: Tony Tong

Reference Weights Used	Weight (lb)	Scale Readout 1	2	3	4	5	Compliance
00283B	2.2	2.2	2.2	2.2	2.2	2.2	✓
00283B	4.4	4.4	4.4	4.4	4.4	4.4	✓
00255	10	10.0	10.0	10.0	10.0	10.0	✓
00255, 00274	20	20.0	20.0	20.0	20.0	20.0	✓
00255, 00274, 00132	30	30.0	30.0	30.0	30.0	30.0	✓

Certificate of Calibration

Certificate Number: 782458

JJ Calibrations, Inc.
7724 SE Aspen Summit Drive
Portland, OR 97266-9217
Phone 503.786.3005
FAX 503.786.2994

Omni-Test Laboratories
13327 NE Airport Way
Portland, OR 97230

PO: 220413
Order Date: 11/04/2022
Authorized By: N/A

Property #: OMNI 00431
User: N/A
Department: N/A
Make: Delmhorst
Model: MCS-1
Serial #: OMNI 00431
Description: Moisture Calibrator
Procedure: Raw Data
Accuracy: Raw Data

Calibrated on: 11/12/2022
*Recommended Due: 11/12/2023
Environment: 23 °C 40 % RH
* As Received: Other - See Remarks
* As Returned: Other - See Remarks
Action Taken: Calibrated
Technician: 40

Remarks: * Many factors may cause the unit to drift out of calibration before the recommended due date. Any reported error is the absolute value between the reference and the unit. Uncertainties include the effects of the unit.

Data is provided for your determination of acceptability.

Standards Used

Std ID	Manufacturer	Model	Nomenclature	Due Date	Trace ID
582A	Fluke	8508A	8 1/2 Reference Mtr	06/28/2023	772664

Measurement Data

Parameter / Measurement Description	Range	Unit	Reference	Min	Max	*Error	UUT	Uncertainty	Accredited = ü
Before/After									
Resistance									
12 %		MOhm	120.0000	0.000	0.000	1.346	121.346 MOhm	5.7E-01	ü
22 %		MOhm	1.100000	0.00000	0.00000	0.00098	1.10098 MOhm	5.7E-01	ü

This instrument has been calibrated in accordance with the JJ Calibrations Quality Assurance Manual and is traceable to either the SI or to National Institute of Standards and Technology (NIST). The quality system and this certificate are in compliance with ANSI/NCSL Z540-1-1994, ISO/IEC 17025-2017, ISO 10012-1, the ISO 9000 family and QS 9000. The expanded uncertainties of measurements for this calibration are based upon 95% (2 sigma) confidence limits. Unless stated in the comments, certificates reflect the "Simple Acceptance Rule" as specified by JCGM 106:2012. Unless otherwise stated, a test accuracy ratio (TAR) of 4:1, if achievable, is maintained. The results reported herein apply only to the calibration of the item described above. This report may not be reproduced, except in full, without written approval of JJ Calibrations.

Reviewer

3 Issued 11/15/2022 Rev # 15

Inspector

PRAXAIR
Making our planet more productive

FEB 24 2020

DocNumber: 299345

Praxair Distribution, Inc.
5700 S. Alameda Street
Los Angeles CA 90058
Tel: 323-585-2154
Fax: 714-542-6689
PGVP ID: F22020

CERTIFICATE OF ANALYSIS / EPA PROTOCOL GAS

Customer & Order Information

PXPKG TUALATIN OR H
10450 SW TUALATIN SHERWOOD ROAD
TUALATIN OR 97062-9547

Certificate Issuance Date: 02/07/2020
Praxair Order Number: 71237269
Part Number: NI CD17CO8E-AS
Customer PO Number: 79225905

Fill Date: 02/03/2020
Lot Number: 70086003404
Cylinder Style & Outlet: AS CGA 590
Cylinder Pressure and Volume: 1300 psig 99 ft3

Certified Concentration

ProSpec EZ Cert

Expiration Date:	02/07/2028	NIST Traceable
Cylinder Number:	DT0034101	Expanded Uncertainty
16.94 %	**Carbon dioxide**	**± 0.5 %**
4.32 %	**Carbon monoxide**	**± 0.6 %**
16.97 %	**Oxygen**	**± 0.2 %**
Balance	**Nitrogen**	

Certification Information:

Certification Date: 02/07/2020 *Term:* 96 Months *Expiration Date:* 02/07/2028

This cylinder was certified according to the 2012 EPA Traceability Protocol, Document #EPA-600/R-12/531, using Procedure G1.

Do Not Use this Standard if Pressure is less than 100 PSIG.

CO2 responses have been corrected for Oxygen IR Broadening effect. O2 responses have been corrected for CO2 interference.

Analytical Data:

(R=Reference Standard, Z=Zero Gas, C=Gas Candidate)

1. ***Component:*** **Carbon dioxide**

Requested Concentration: 17 %
Certified Concentration: 16.94 %
Instrument Used: Horiba VIA-510 S/N 20C194WK
Analytical Method: NDIR
Last Multipoint Calibration: 01/24/2020

First Analysis Data:						Date	02/07/2020
Z:	0	R:	19.98	C:	16.94	Conc:	16.94
R:	19.98	Z:	0	C:	16.95	Conc:	16.95
Z:	0	C:	16.95	R:	19.99	Conc:	16.95
UOM:	%				Mean Test Assay:		16.94 %

Reference Standard: Type / Cylinder #: GMIS / CC149981
Concentration / Uncertainty: 19.98 % ±0.279%
Expiration Date: 06/07/2026
Traceable to: SRM # / Sample # / Cylinder #: RGM#CC28033 / N/A / RGM#CC28033
SRM Concentration / Uncertainty: 19.67% / ±0.04%
SRM Expiration Date: 07/15/2021

Second Analysis Data:						Date	
Z:	0	R:	0	C:	0	Conc:	0
R:	0	Z:	0	C:	0	Conc:	0
Z:	0	C:	0	R:	0	Conc:	0
UOM:	%				Mean Test Assay:		%

2. ***Component:*** **Carbon monoxide**

Requested Concentration: 4.25 %
Certified Concentration: 4.32 %
Instrument Used: Horiba VIA-510 S/N UB9UCSYX
Analytical Method: NDIR
Last Multipoint Calibration: 01/31/2020

First Analysis Data:						Date	02/07/2020
Z:	0	R:	5	C:	4.32	Conc:	4.32
R:	5	Z:	0	C:	4.32	Conc:	4.32
Z:	0	C:	4.32	R:	5.01	Conc:	4.32
UOM:	%				Mean Test Assay:		4.32 %

Reference Standard: Type / Cylinder #: GMIS / CC242633
Concentration / Uncertainty: 5.00 % ±0.543%
Expiration Date: 04/03/2025
Traceable to: SRM # / Sample # / Cylinder #: SRM 2642a / 51-D-23 / FF23106
SRM Concentration / Uncertainty: 7.859% / ±0.039%
SRM Expiration Date: 07/15/2019

Second Analysis Data:						Date	
Z:	0	R:	0	C:	0	Conc:	0
R:	0	Z:	0	C:	0	Conc:	0
Z:	0	C:	0	R:	0	Conc:	0
UOM:	%				Mean Test Assay:		%

3. ***Component:*** **Oxygen**

Requested Concentration: 17 %
Certified Concentration: 16.97 %
Instrument Used: OXYMAT 5E
Analytical Method: Paramagnetic
Last Multipoint Calibration: 01/24/2020

First Analysis Data:						Date	02/07/2020
Z:	0	R:	20.88	C:	16.98	Conc:	16.97
R:	20.88	Z:	0	C:	16.98	Conc:	16.97
Z:	0	C:	17	R:	20.9	Conc:	16.99
UOM:	%				Mean Test Assay:		16.97 %

Reference Standard: Type / Cylinder #: GMIS / CC707388
Concentration / Uncertainty: 20.87 % ±0.108%
Expiration Date: 12/14/2026
Traceable to: SRM # / Sample # / Cylinder #: SRM 2659a / 71-E-19 / FF22331
SRM Concentration / Uncertainty: 20.863% / ±0.021%
SRM Expiration Date: 08/23/2021

Second Analysis Data:						Date	
Z:	0	R:	0	C:	0	Conc:	0
R:	0	Z:	0	C:	0	Conc:	0
Z:	0	C:	0	R:	0	Conc:	0
UOM:	%				Mean Test Assay:		%

Analyzed By Jose Vasquez

Certified By Jenna Lockman

Information contained herein has been prepared at your request by qualified experts within Praxair Distribution, Inc. While we believe that the information is accurate within the limits of the analytical methods employed and is complete to the extent of the specific analyses performed, we make no warranty or representation as to the suitability of the use of the information for any purpose. The information is offered with the understanding that any use of the information is at the sole discretion and risk of the user. In no event shall the liability of Praxair Distribution, Inc., arising out of the use of the information contained herein exceed the fee established for providing such information.

Making our world more productive

Received 5/1/2023

DocNumber: 538869

Linde Gas & Equipment Inc.
5700 S. Alameda Street
Los Angeles CA 90058
Tel: 323-585-2154
Fax: 714-542-6689
PGVP ID: F22023

CERTIFICATE OF ANALYSIS / EPA PROTOCOL GAS

Customer & Order Information

LGEPKG TUALATIN OR H
10450 SW TUALATIN SHERWOOD ROAD
TUALATIN OR 97062-9547

Certificate Issuance Date: 04/25/2023
Linde Order Number: 72420708
Part Number: NI CD17CO8E-AS
Customer PO Number: 80429067

Fill Date: 04/19/2023
Lot Number: 70086310908
Cylinder Style & Outlet: AS CGA 590
Cylinder Pressure and Volume: 1300 psig 99 ft3

Certified Concentration

ProSpec EZ Cert

Expiration Date:	04/25/2031	NIST Traceable
Cylinder Number:	CC241056	Expanded Uncertainty
16.84 %	Carbon dioxide	± 0.09 %
4.38 %	Carbon monoxide	± 0.03 %
16.95 %	Oxygen	± 0.05 %
Balance	Nitrogen	

Certification Information:

Certification Date: 04/25/2023 Term: 96 Months Expiration Date: 04/25/2031

This cylinder was certified according to the 2012 EPA Traceability Protocol, Document #EPA-600/R-12/531, using Procedure G1. Uncertainty above is expressed as absolute expanded uncertainty at a level of confidence of approximately 95% with a coverage factor k = 2. Do Not Use this Standard if Pressure is less than 100 PSIG.

CO responses have been corrected for O2 interference. O2 responses have been corrected for CO2 interference.

Analytical Data:

(R=Reference Standard, Z=Zero Gas, C=Gas Candidate)

1. **Component:** Carbon dioxide

Requested Concentration: 17 %
Certified Concentration: 16.84 %
Instrument Used: Horiba VIA-510 S/N 20C194WK
Analytical Method: NDIR
Last Multipoint Calibration: 04/21/2023

First Analysis Data:							Date	04/25/2023
Z:	0	R:	19.34	C:	16.84	Conc:	16.83	
R:	19.35	Z:	0	C:	16.85	Conc:	16.84	
Z:	0	C:	16.85	R:	19.36	Conc:	16.84	
UOM:	%				Mean Test Assay:		16.84	%

Reference Standard: Type / Cylinder #: NTRM / CC725981
Concentration / Uncertainty: 19.34 % ±0.03 %
Expiration Date: 01/12/2027
Traceable to: SRM # / Sample # / Cylinder #: NTRM / 190701 / CC725973
SRM Concentration / Uncertainty: 19.34% / ±0.031%
SRM Expiration Date: 01/12/2027

Second Analysis Data:							Date	
Z:	0	R:	0	C:	0	Conc:	0	
R:	0	Z:	0	C:	0	Conc:	0	
Z:	0	C:	0	R:	0	Conc:	0	
UOM:	%				Mean Test Assay:			%

2. **Component:** Carbon monoxide

Requested Concentration: 4.25 %
Certified Concentration: 4.38 %
Instrument Used: Horiba VIA-510 S/N UB9UCSYX
Analytical Method: NDIR
Last Multipoint Calibration: 04/21/2023

First Analysis Data:							Date	04/25/2023
Z:	0	R:	7.81	C:	4.4	Conc:	4.39	
R:	7.84	Z:	0	C:	4.38	Conc:	4.37	
Z:	0	C:	4.37	R:	7.82	Conc:	4.36	
UOM:	%				Mean Test Assay:		4.38	%

Reference Standard: Type / Cylinder #: GMIS / CC187322
Concentration / Uncertainty: 7.81 % ±0.04 %
Expiration Date: 04/03/2025
Traceable to: SRM # / Sample # / Cylinder #: SRM 2642a / 51-D-23 / FF23106
SRM Concentration / Uncertainty: 7.859% / ±0.039%
SRM Expiration Date: 07/15/2019

Second Analysis Data:							Date	
Z:	0	R:	0	C:	0	Conc:	0	
R:	0	Z:	0	C:	0	Conc:	0	
Z:	0	C:	0	R:	0	Conc:	0	
UOM:	%				Mean Test Assay:			%

3. **Component:** Oxygen

Requested Concentration: 17 %
Certified Concentration: 16.95 %
Instrument Used: Siemens Oxymat 6E S/N 7MB20211AA000CA1
Analytical Method: Paramagnetic
Last Multipoint Calibration: 04/21/2023

First Analysis Data:							Date	04/25/2023
Z:	0	R:	20.9	C:	16.94	Conc:	16.94	
R:	20.89	Z:	0	C:	16.95	Conc:	16.95	
Z:	0	C:	16.96	R:	20.91	Conc:	16.96	
UOM:	%				Mean Test Assay:		16.95	%

Reference Standard: Type / Cylinder #: GMIS / ND29287
Concentration / Uncertainty: 20.90 % ±0.02 %
Expiration Date: 09/01/2028
Traceable to: SRM # / Sample # / Cylinder #: SRM 2659a / 71-E-19 / FF22331
SRM Concentration / Uncertainty: 20.863% / ±0.021%
SRM Expiration Date: 08/23/2021

Second Analysis Data:							Date	
Z:	0	R:	0	C:	0	Conc:	0	
R:	0	Z:	0	C:	0	Conc:	0	
Z:	0	C:	0	R:	0	Conc:	0	
UOM:	%				Mean Test Assay:			%

Analyzed By Courtney Zielke

Certified By Ying Yu

Information contained herein has been prepared at your request by qualified experts within Linde Gas & Equipment Inc. While we believe that the information is accurate within the limits of the analytical methods employed and is complete to the extent of the specific analyses performed, we make no warranty or representation as to the suitability of the use of the information for any purpose. The information is offered with the understanding that any use of the information is at the sole discretion and risk of the user. In no event shall the liability of Linde Gas & Equipment Inc. , arising out of the use of the information contained herein exceed the fee established for providing such information.

Example Calculations

Equations and Sample Calculations – ASTM E2780 & E2515

Manufacturer: Kuma Stoves
Model: K-251
Run: 1
Category:

Equations used to calculate the parameters listed below are described in this appendix. Sample calculations are provided for each equation. The raw data and printout results from a sample run are also provided for comparison to the sample calculations.

M_{Sdb} – Weight of test fuel spacers, dry basis, kg

M_{Cdb}– Weight of test fuel crib, excluding nails and spacers, dry basis, kg

D_{Cdb} - Density of fuel crib, excluding spacers and nails, dry basis, lbs/ft^3

M_{FTAdb} - Total weight of fuel crib excluding nails, dry basis, kg

BR – Dry burn rate, kg/hr

V_s – Average gas velocity in the dilution tunnel, ft/sec

Q_{sd} – Average gas flow rate in dilution tunnel, dscf/hr

$V_{m(std)}$ – Volume of gas sampled, corrected to dry standard conditions, dscf

m_n – Total particulate matter collected, mg

C_s - Concentration of particulate matter in tunnel gas, dry basis, corrected to standard conditions, g/dscf

E_T – Total particulate emissions, g

PR - Proportional rate variation

PM_R – Particulate emissions for test run, g/hr

PM_F – Particulate emission factor for test run, g/dry kg of fuel burned

M_{Sdb} – Weight of test fuel spacers, dry basis, kg
ASTM E2780 equation (1)

$$M_{Sdb} = (M_{Swb})(100/(100 + FM_S))$$

Where,

FM_S	=	average fuel moisture of test fuel spacers, % dry basis
M_{Swb}	=	weight of test fuel spacers, wet basis, kg

Sample Calculation:

FM_S =	13.0	%
M_{Swb} =	2.3	lbs
0.4536 =	Conversion factor from lbs to kg	

$$M_{Sdb} = [(2.3 \times 0.4536)(100/(100 + 13.0)$$

M_{Sdb} = **0.923** kg

M_{Cdb}– Weight of test fuel crib, excluding nails and spacers, dry basis, kg
ASTM E2780 equation (2)

$$M_{Cdb} = \Sigma[(M_{CPnwb})(100/(100 + FM_{CPn}))]$$

Where,

M_{CPnwb} = weight of each test fuel piece n in fuel crib, excluding nails and spacers, wet basis, kg

FM_{CPn} = Average fuel moisture of test fuel n in fuel crib, % dry basis

Sample Calculation (test fuel piece 1):

MC_{Pnwb} = 14.9

FM_{CPn} = 22.5

= 14.9 (100/(100+ 22.5)

= 12.2 lbs

Total crib weight, excluding spacer 12.16 lbs

M_{Cdb} = **5.52** kg

D_{Cdb} - Density of fuel crib, excluding spacers and nails, dry basis, lbs/ft^3
ASTM E2780 equation (3)

$$D_{Cdb} = M_{Cdb}/V_C$$

Where,

V_C = Volume of fuel crib, ft^3

Sample calculation:

V_C = 784.875 in^3

1728 = conversion from in^3 to ft^3

D_{Cdb} = 12.16 / 784.875 * 1728

= **26.7729** lbs/ft^3

M_{FTAdb} - Total weight of fuel crib including spacers and nails, dry basis, kg
ASTM E2780 equation (4)

$$M_{FTAdb} = M_{Sdb} + M_{Cdb}$$

Sample calculation:

$$M_{FTAdb} = 0.923 + 5.52$$

$$= \mathbf{6.44} \text{ kg}$$

Note: ASTM E2780 mistakenly calls this "Total weight of fuel crib ***excluding*** spacers and nails, dry basis, kg

BR – dry burn rate, kg/hr
ASTM E2780 equation (5)

$$BR = \frac{60\ M_{FTAdb}}{\theta}$$

Where,

θ = Total length of test run, min

Sample Calculation:

M_{Bdb} = 6.44 kg

θ = 177 min

$$BR = \frac{60 \times 6.44}{177}$$

BR = **2.18** kg/hr

V_s – Average gas velocity in the dilution tunnel, ft/sec
ASTM E2515 equations (9)

$$V_S = F_P \times K_P \times C_P \times \left(\sqrt{\Delta P}\right)_{avg} \times \sqrt{\frac{T_{s(avg)}}{P_s \times M_s}}$$

Where:

F_p	=	Adjustment factor for center of tunnel pitot tube placement, $Fp = \frac{V_{strav}}{V_{scent}}$, ASTM E2515 Equation (1)
v_{scent}	=	Dilution tunnel velocity calculated after the multi-point pitot traverse at the center, ft/sec
v_{strav}	=	Dilution tunnel velocity calculated after the multi-point pitot traverse, ft/sec
k_p	=	Pitot tube constant, 85.49
C_p	=	Pitot tube coefficient: 0.99, unitless
ΔP*	=	Velocity pressure in the dilution tunnel, in H_2O
T_s	=	Absolute average gas temperature in the dilution tunnel, °R; (°R = °F + 460)
P_s	=	Absolute average gas static pressure in dilution tunnel, = $P_{bar} + P_g$, in Hg
P_{bar}	=	Barometric pressure at test site, in. Hg
P_g	=	Static pressure of tunnel, in. H_20; (in Hg = in H_20/13.6)
M_s	=	**The dilution tunnel wet molecular weight; M_s = 28.78 assuming a dry weight of 29 lb/lb-mole

Sample calculation:

$$Fp = \frac{18.79}{21.11} = 0.890$$

$$V_s = 0.890 \times 85.49 \times 0.99 \times 0.310 \times \left(\frac{86.9 + 460}{\left(30.11 + \frac{-0.32}{13.6}\right) \times 28.78} \right)^{1/2}$$

V_s = **18.58** ft/s

*The ASTM test standard mistakenly has the square root of the average delta p instead of the average of the square root of delta p. The current EPA Method 2 is also incorrect. This was verified by Mike Toney at EPA.

**The ASTM test standard mistakenly identifies Ms as the dry molecular weight. It should be the wet molecular weight as indicated in EPA Method 2.

Q_{sd} – Average gas flow rate in dilution tunnel, dscf/hr
ASTM E2515 equation (3)

$$Q_{sd} = 3600 \times (1 - B_{ws}) \times v_s \times A \times \frac{T_{std}}{T_{s(avg)}} \times \frac{P_s}{P_{std}}$$

Where:

3600	=	Conversion from seconds to hours (ASTM method uses 60 to convert in minutes)
B_{ws}	=	Water vapor in gas stream, proportion by volume; assume 2%
A	=	Cross sectional area of dilution tunnel, ft^2
T_{std}	=	Standard absolute temperature, 528 °R
P_s	=	Absolute average gas static pressure in dilution tunnel, = P_{bar} + P_g , in Hg
$T_{s(avg)}$	=	Absolute average gas temperature in the dilution tunnel, °R; (°R = °F + 460)
P_{std}	=	Standard absolute pressure, 29.92 in Hg

Sample calculation:

$$Q_{sd} = 3600 \times (1 - 0.02) \times 18.58 \times 0.196 \times \frac{528}{86.9 + 460} \times \frac{30.1 + \frac{-0.32}{13.6}}{29.92}$$

Q_{sd} = **12499.1** dscf/hr

$V_{m(std)}$ – Volume of Gas Sampled Corrected to Dry Standard Conditions, dscf
ASTM E2515 equation (6)

$$V_{m(std)} = K_1 V_m Y \frac{P_{bar} + \left(\frac{\Delta H}{13.6}\right)}{T_m}$$

Where:

K_1	=	17.64 °R/in. Hg
V_m	=	Volume of gas sample measured at the dry gas meter, dcf
Y	=	Dry gas meter calibration factor, dimensionless
P_{bar}	=	Barometric pressure at the testing site, in. Hg
ΔH	=	Average pressure differential across the orifice meter, in. H_2O
T_m	=	Absolute average dry gas meter temperature, °R

Sample Calculation:

Using equation for Train 1:

$$V_{m(std)} = 17.64 \times 28.367 \times 1.004 \times \frac{\left(30.11 + \frac{1.29}{13.6}\right)}{(70.2 + 460)}$$

$V_{m(std)}$ = **28.619** dscf

Using equation for Train 2:

$$V_{m(std)} = 17.64 \times 28.306 \times 1.002 \times \frac{\left(30.11 + \frac{1.01}{13.6}\right)}{(70.9 + 460)}$$

$V_{m(std)}$ = **28.443** dscf

Using equation for ambient train:

$$V_{m(std)} = 17.64 \times 0.00 \times 1.012 \times \frac{\left(\underline{30.11} + \frac{0.00}{13.6}\right)}{(60.5 + 460)}$$

$V_{m(std)}$ = **0** dscf

m_n – Total Particulate Matter Collected, mg
ASTM E2515 Equation (12)

$$m_n = m_p + m_f + m_g$$

Where:

m_p = mass of particulate matter from probe, mg

m_f = mass of particulate matter from filters, mg

m_g = mass of particulate matter from filter seals, mg

Sample Calculation:

Using equation for Train 1 (first hour):

m_n = 0.4 + 0.4 + 0.3

m_n = 1.1 mg

Using equation for Train 1 (post-first hour):

m_n = 0.0 + -0.3 + 0.4

m_n = 0.1 mg

Train 1 aggregate:

m_n = 1.1 + 0.1

m_n = **1.2** mg

Using equation for Train 2:

m_n = 0 + 0.4 + 0.4

m_n = **0.8** mg

C_s - Concentration of particulate matter in tunnel gas, dry basis, corrected to standard conditions, g/dsc
ASTM E2515 equation (13)

$$C_s = K_2 \times \frac{m_n}{V_{m(std)}}$$

Where:

K_2	=	Constant, 0.001 g/mg
m_n	=	Total mass of particulate matter collected in the sampling train, mg
$V_{m(std)}$	=	Volume of gas sampled corrected to dry standard conditions, dscf

Sample calculation:

For Train 1:

$$C_s = 0.001 \times \frac{1.2}{28.62}$$

C_s = **0.00004** g/dscf

For Train 2

$$C_s = 0.001 \times \frac{0.8}{28.44}$$

C_s = **0.00003** g/dscf

For Ambient Train

$$C_r = 0.001 \times \frac{0.2}{0}$$

C_r = **0** g/dscf

E_T – Total Particulate Emissions, g
ASTM E2515 equation (15)

$$E_T = (c_s - c_r) \times Q_{std} \times \theta$$

Where:

C_s	=	Concentration of particulate matter in tunnel gas, g/dscf
C_r	=	Concentration particulate matter room air, g/dscf
Q_{std}	=	Average dilution tunnel gas flow rate, dscf/hr
θ	=	Total time of test run, minutes

Sample calculation:

For Train 1

E_T = (0.000042 - 0) x 12499.1 x 177 /60

E_T = 1.55 g

For Train 2

E_T = (0.000028 - 0) x 12499.1 x 177 /60

E_T = 1.04 g

Average

E = 1.29 g

Total emission values shall not differ by more than 7.5% from the total average emissions

7.5% of the average =	0.10
Train 1 difference =	0.25
Train 2 difference =	0.25

PR - Proportional Rate Variation
ASTM E2515 equation (16)

$$PR = \left[\frac{\theta \times V_{mi} \times V_s \times T_m \times T_{si}}{\theta_i \times V_m \times V_{si} \times T_{mi} \times T_s}\right] \times 100$$

Where:

θ = Total sampling time, min

θ_i = Length of recording interval, min

V_{mi} = Volume of gas sample measured by the dry gas meter during the “ith” time interval, dcf

V_m = Volume of gas sample as measured by dry gas meter, dcf

V_{si} = Average gas velocity in the dilution tunnel during the "ith" time interval, ft/sec

V_s = Average gas velocity in the dilution tunnel, ft/sec

T_{mi} = Absolute average dry gas meter temperature during the "ith" time interval, ^oR

T_m = Absolute average dry gas meter temperature, ^oR

T_{si} = Absolute average gas temperature in the dilution tunnel during the "ith" time interval, ^oR

T_s = Absolute average gas temperature in the dilution tunnel, ^oR

Sample calculation (for the first 1 minute interval of Train 1):

$$PR = \left(\frac{177 \times 0.164 \times 18.58 \times (86.9 + 460) \times (70.2 + 460)}{1 \times 28.37 \times 18.72 \times (70.2 + 460) \times (63.0 + 460)} \right) \times 100$$

PR = <u>106</u> %

PM_R – Particulate emissions for test run, g/hr
ASTM E2780 equation (6)

$$PM_R = 60\ (E_T/\theta)$$

Where,

E_T = Total particulate emissions, grams

θ = Total length of full integrated test run, min

Sample Calculation:

E_T (Dual train average) = 1.29 g

θ = 177 min

$$PM_R = 60 \times (1.29 / 177)$$

PM_R = **0.44** g/hr

PM_F – Particulate emission factor for test run, g/dry kg of fuel burned
ASTM E2780 equation (7)

$$PM_F = E_T/M_{FTAdb}$$

Sample Calculation:

E_T (Dual train average) = 1.29 g

M_{Bdb} = 6.44 kg

PM_F = 1.29 / 6.44

PM_F = **0.20** g/kg

Section 4

LABELING & OWNER'S MANUAL

Installation	Clearance	Connector	A	B	C	D	E	F	G	H	I[1]	I[2]	J	K	M	N
Residential	Standard	Single Wall	15	11.5	24.5	14.5	15	5	6	16						
Residential or Mobile home	Reduced	Double Wall	10	7	23.5	14	14.5	5	6	16						
Insert	Standard	UL 1777 Liner							6	16	19.25	14.25	15	8.5		
Alcove	Reduced	Double Wall	10	7	23.5	14			6	16					56	84

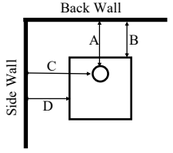

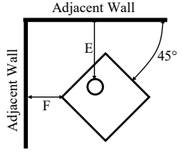

Insert Installation (Cascade Only)

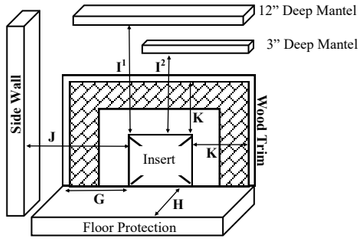

Alcove Installation

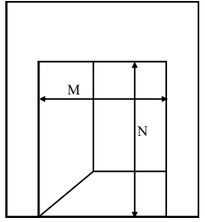

Floor Protection

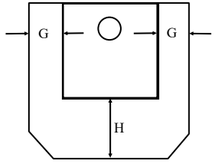

ALL DIMENSIONS ARE IN INCHES.

- ☐ ASHWOOD LE-1
- ☐ WOOD CLASSIC LE-1
- ☐ CAMBRIDGE LE-1
- ☐ CASCADE LE-1

INSTALL AND USE ONLY IN ACCORDANCE WITH KUMA STOVES' INSTALLATION AND OPERATION INSTRUCTIONS. CONTACT LOCAL BUILDING OR FIRE OFFICIALS ABOUT RESTRICTIONS AND INSTALLATION INSPECTION IN YOUR AREA. REFER TO INSTALLATION INSTRUCTIONS FOR PRECAUTIONS REQUIRED FOR PASSING A CHIMNEY THROUGH A COMBUSTIBLE WALL OR CEILING.

ROOM HEATER, SOLID FUEL TYPE, ALSO FOR USE IN MOBILE HOMES. FOR USE WITH SOLID FUEL ONLY. USE ONLY SEASONED CORDWOOD. DO NOT CONNECT THIS UNIT TO A FLUE SERVICING ANOTHER APPLIANCE. DO NOT USE GRATE OR ELEVATE FIRE - BUILD WOOD FIRE DIRECTLY ON FIREBRICK. REPLACE GLASS ONLY WITH 5mm CERAMIC. ATTACH LEGS OR PEDESTAL USING INSTALLTION INSTRUCTIONS. BLOWER ELECTRICAL RATING: 115 VOLT, 18 WATT, 60 HERTZ. DO NOT ROUTE POWER CORD BENEATH HEATER.

USE ONLY LISTED CHIMNEY SYSTEMS THAT ARE 6" DIAMETER U.L. 103 TYPE HT, ALL FUEL, OR SOLID FUEL. MASONRY CHIMNEY SHOULD BE LISTED TO UL 1777. USE ONLY 24 MSG BLACK OR 25 MSG BLUED STEEL SINGLE WALL CONNECTOR FOR STANDARD CLEARANCE. USE ONLY LISTED DOUBLE WALL CONNECTOR FOR REDUCED CLEARANCE AND MOBILE HOMES. SEE DIAGRAMS FOR STANDARD AND REDUCED CLEARANCE DIMENSIONS. USE ONLY U.L. 1618 TYPE 1 (EMBER PROTECTION) OR TYPE 2 (R-VALUE 1.0) HEARTH PAD OR EQUIVALENT. SEE DIAGRAM FOR HEARTH DIMENSIONS. FOR CASCADE INSERT: ONLY INSTALL INSERT INTO A MASONRY FIREPLACE. INSERT INSTALLATION MUST USE LISTED STAINLESS STEEL LINER. TO BE INSTALLED AS A FREESTANDING ROOM HEATER WITH THE CLEARANCES IN THE MANUFACTURER'S INSTALLATION INSTRUCTIONS. **NOT TO BE INSTALLED IN ANY FACTORY-BUILT FIREPLACE.**

This wood heater needs periodic inspection and repair for proper operation. Consult the owner's manual for further information. It is against federal regulations to operate this wood heater in a manner inconsistent with the operating instruction in the owner's manual

OMNI-Test Laboratories Inc.
Portland OR, USA

MANUFACTURED BY:
KUMA STOVES INC
50145 N OLD HWY 95
RATHDRUM ID 83858

KUMA

MODEL NAME: K-251

Serial Number

Emissions Test Report #: 0123WM014E Safety tested to UL 1482-2011 (R2015) **Report # 0123WS012S and 0123WN012S**

CAUTION: HOT WHILE IN OPERATION - DO NOT TOUCH - KEEP CHILDREN AND CLOTHING AWAY - CONTACT MAY CAUSE SKIN BURNS. SEE NAMEPLATE AND INSTRUCTIONS. KEEP FURNISHINGS AND OTHER COMBUSTIBLE MATERIALS A CONSIDERABLE DISTANCE FROM THE APPLIANCE. DO NOT OVERFIRE - IF HEATER OR CHIMNEY CONNECTOR GLOWS, YOU ARE OVERFIRING. INSPECT AND CLEAN CHIMNEY FREQUENTLY - UNDER CERTAIN CONDITIONS OF USE, CREOSOTE BUILDUP MAY OCCUR RAPIDLY. DO NOT PASS CONNECTOR PIPE THROUGH COMBUSTIBLE WALLS OR CEILINGS. DO NOT OBSTRUCT BENEATH THE HEATER.

☐ JAN ☐ FEB ☐ MAR ☐ APR ☐ MAY ☐ JUN ☐ JUL ☐ AUG ☐ SEP ☐ OCT ☐ NOV ☐ DEC ☐ 2019 ☐ 2020 ☐ 2021 ☐ 2022

U.S. ENVIRONMENTAL PROTECTION AGENCY: Certified to comply with 2020 particulate emission standards using crib wood. 1.11 Grams per hour.

Model # K-251:

Ashwood LE-1
Wood Classic LE-1
Cambridge LE-1

Tested and listed by OMNI-Test Laboratories Inc.
Portland OR, USA

Emissions tested to
ASTM E2515 and ASTM E2780
Report# 0123WM014E

Safety tested to UL 1482-2011 (R2015)
Report # 0123WS012S

INSTALLATION AND OPERATING INSTRUCTIONS
SAVE THESE INSTRUCTIONS

Model # K-251:

Cascade LE-1

Tested and listed by OMNI-Test Laboratories Inc.
Portland OR, USA

Emissions tested to: ASTM 3053-2017
Report# 0123WM014E

Safety tested to UL 1482-2011 (R2015)
Report # 0123WN012S

INSTALLATION AND OPERATING INSTRUCTIONS

SAVE THESE INSTRUCTIONS

Welcome to the Kuma family

Kuma is a modified version of the Greek word Kauma that means:
Burning, Glow, Heat (especially of the sun).

We would like to take the time to say thank you for purchasing a Kuma stove. We know that there are many choices in hearth products, and we appreciate that you chose a Kuma for your home heating. Our mission is to provide you with a quality product that will last a lifetime.

You may have noticed a portion of the Bible enclosed in your owner's packet. It is a small gift for you. Our faith in Jesus Christ is very important to us and we have that faith because there is hope in heaven. That hope comes from the message of truth that is found in this New Testament.

Thank you for allowing us the opportunity to warm your house and may God bless you.

Sincerely,
Mark & Lynnette Freeman
Founders - **Kuma Stoves**.

This manual describes the installation and operation of the Kuma Model K-251 Catalytic equipped wood heater. This heater meets the 2020 U.S. Environmental Protection Agency's crib wood emission limits for wood heaters sold after May 15, 2020. Under specific test conditions this heater has been shown to deliver heat at rates ranging from 11,219 to 30,612 Btu/hr. and an efficiency of 77.8% (High Heating Value). Please visit https://www.kumastoves.com/content/page/EPA for a detailed explanation of stove efficiencies. Particulate emissions are 1.11 grams per hour and average CO emissions are 0.49 grams per minute.

Please read the safety precautions and the entire installation and operation instructions carefully. Failure to properly install and maintain your wood stove can result in an unsafe condition.

TABLE OF CONTENTS

SECTION 1 - SAFETY PRECAUTIONS

SECTION 2 - SPECIFCATIONS

SECTION 3 - INSTALLATION INSTRUCTIONS

SECTION 4 - OPERATING INSTRUCTIONS

SECTION 5 - CATALYST INFORMATION

SECTION 6 - MAINTENANCE

SECTION 7 - TROUBLESHOOTING

SECTION 8 - WARRANTY

SECTION 1 - WARNINGS

WARNING

- If this stove is not properly installed, a house fire can occur. For your protection, follow the installation instructions provided. We recommend contacting local building or fire officials regarding restrictions and installation inspection requirements in your area. **We also recommend that your Kuma stove be installed by a properly trained and licensed installer, preferably an NFI (National Fireplace Institute) expert.**
- **DO NOT CONNECT THIS UNIT TO A CHIMNEY FLUE SERVICING ANOTHER APPLIANCE.**
- **Do not burn garbage or flammable fluids such as gasoline, naptha or engine oil**. Do not use charcoal lighter fluid or similar liquids to start or "freshen up" a fire in this heater. Keep all such fluids well away from the heater while in use. Storing these fluids near a stove could cause a fire.
- **DO NOT CONNECT TO ANY AIR DISTRIBUTION OR DUCT SYSTEM.**
- **DO NOT OVERFIRE.** If any part of the stove or chimney glows, the stove is in an over fire condition. If this happens, shut the air control off immediately. Over firing can cause damage.
- **WARNING: DO NOT INSTALL IN A SLEEPING ROOM.**
- **An improperly drafting stove can cause smoke and carbon monoxide to enter the home. Smoke detectors and carbon monoxide monitors are recommended to be installed in the same room as this heater.**
- **CAUTION: THE STRUCTURAL INTEGRITY OF THE FLOOR, WALLS, ROOF/CEILING, AND VAPOR BARRIERS MUST BE MAINTAINED.**
- **DO NOT USE SINGLE WALL PIPE OR CONNECTOR PIPE FOR ANY CHIMNEY APPLICATION, EXTERIOR OR THROUGH THE WALL OR CEILING.** Single wall pipe may only be used as a connection between the stove and an approved masonry or stainless steel chimney. **Single wall pipe may not be used as a connector in mobile homes.**
- When installing into an existing masonry or metal chimney, examine the chimney system carefully. If you have any questions, seek professional advice. We recommend having existing chimneys cleaned and inspected by a qualified professional prior to the installation of your new stove.
- **NOTE ALL MINIMUM CLEARANCE REQUIREMENTS TO COMBUSTIBLES.** Installation must comply with minimum clearances as listed in this manual. **Clearances may only be reduced by means approved by the regulatory authority.**
- Do not operate this stove with the door in an open position, except for cracking open during start-up. Continued operation with the door open can cause overheating of the unit, and expose embers to nearby combustibles.
- **Do not operate with broken glass. Do not abuse glass such as striking or slamming the door.**
- This stove must be connected to a minimum 6" diameter listed chimney that complies with U.L. type 103HT factory built chimney or a code approved masonry chimney. When installing into masonry chimneys, a U.L. 1777 approved liner must be installed.
- When connecting single wall or double wall connector pipe to the stove and chimney, use 3 screws per pipe joint including 3 screws securing the pipe to the stove. Depending on the type of double wall pipe you are using, it may also be necessary to fasten it at the chimney.
- Use only approved components for Chimney and Connector. Field fabricated or "makeshift" components are not allowed and can cause a fire.
- **DO NOT USE THIS STOVE WITHOUT THE BAFFLE BOARDS AND CERAMIC INSULATION PACKAGED WITH YOUR STOVE.**
- When connecting this stove to a masonry chimney, make sure you observe all applicable clearances including walls, ceilings and other combustible material. A masonry chimney must be minimum 6" diameter and constructed with a liner according to NFPA code 211. If you have any questions about the condition or the code compliance of your masonry chimney, please speak with a qualified professional.
- HOT WHILE IN OPERATION. KEEP CHILDREN, CLOTHING AND FURNITURE AWAY. CONTACT MAY CAUSE SKIN BURNS.

CERTIFICATION TAG

Installation	Clearance	Connector	A	B	C	D	E	F	G	H	I^1	I^2	J	K	M	N
Residential	Standard	Single Wall	15	11.5	24.5	14.5	15	5	6	16						
Residential or Mobile home	Reduced	Double Wall	10	7	23.5	14	14.5	5	6	16						
Insert	Standard	UL 1777 Liner							6	16	19.25	14.25	15	8.5		
Alcove	Reduced	Double Wall	10	7	23.5	14			6	16					56	84

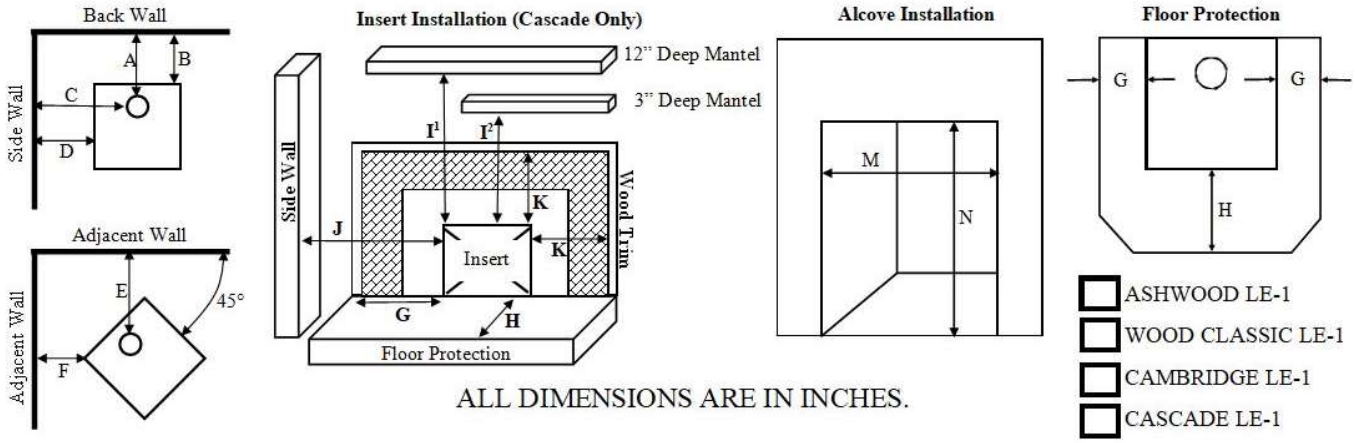

INSTALL AND USE ONLY IN ACCORDANCE WITH KUMA STOVES' INSTALLATION AND OPERATION INSTRUCTIONS. CONTACT LOCAL BUILDING OR FIRE OFFICIALS ABOUT RESTRICTIONS AND INSTALLATION INSPECTION IN YOUR AREA. REFER TO INSTALLATION INSTRUCTIONS FOR PRECAUTIONS REQUIRED FOR PASSING A CHIMNEY THROUGH A COMBUSTIBLE WALL OR CEILING.

ROOM HEATER, SOLID FUEL TYPE, ALSO FOR USE IN MOBILE HOMES. FOR USE WITH SOLID FUEL ONLY. USE ONLY SEASONED CORDWOOD. DO NOT CONNECT THIS UNIT TO A FLUE SERVICING ANOTHER APPLIANCE. DO NOT USE GRATE OR ELEVATE FIRE - BUILD WOOD FIRE DIRECTLY ON FIREBRICK. REPLACE GLASS ONLY WITH 5mm CERAMIC. ATTACH LEGS OR PEDESTAL USING INSTALLTION INSTRUCTIONS. BLOWER ELECTRICAL RATING: 115 VOLT, 18 WATT, 60 HERTZ. DO NOT ROUTE POWER CORD BENEATH HEATER.

USE ONLY LISTED CHIMNEY SYSTEMS THAT ARE 6" DIAMETER U.L. 103 TYPE HT, ALL FUEL, OR SOLID FUEL. MASONRY CHIMNEY SHOULD BE LISTED TO UL 1777. USE ONLY 24 MSG BLACK OR 25 MSG BLUED STEEL SINGLE WALL CONNECTOR FOR STANDARD CLEARANCE. USE ONLY LISTED DOUBLE WALL CONNECTOR FOR REDUCED CLEARANCE AND MOBILE HOMES. SEE DIAGRAMS FOR STANDARD AND REDUCED CLEARANCE DIMENSIONS. USE ONLY U.L. 1618 TYPE 1 (EMBER PROTECTION) OR TYPE 2 (R-VALUE 1.0) HEARTH PAD OR EQUIVALENT. SEE DIAGRAM FOR HEARTH DIMENSIONS. FOR CASCADE INSERT: ONLY INSTALL INSERT INTO A MASONRY FIREPLACE. INSERT INSTALLATION MUST USE LISTED STAINLESS STEEL LINER. TO BE INSTALLED AS A FREESTANDING ROOM HEATER WITH THE CLEARANCES IN THE MANUFACTURER'S INSTALLATION INSTRUCTIONS. **NOT TO BE INSTALLED IN ANY FACTORY-BUILT FIREPLACE.**

This wood heater needs periodic inspection and repair for proper operation. Consult the owner's manual for further information. It is against federal regulations to operate this wood heater in a manner inconsistent with the operating instruction in the owner's manual

OMNI-Test Laboratories Inc. Portland OR, USA

MANUFACTURED BY:
KUMA STOVES INC
50145 N OLD HWY 95
RATHDRUM ID 83858

MODEL NAME:
K-251

Serial Number

Emissions Test Report #: XXXXXXX Safety tested to UL 1482-2011 (R2015) **Report # 0123WS012S and 0123WN012S**

CAUTION: HOT WHILE IN OPERATION - DO NOT TOUCH - KEEP CHILDREN AND CLOTHING AWAY - CONTACT MAY CAUSE SKIN BURNS. SEE NAMEPLATE AND INSTRUCTIONS. KEEP FURNISHINGS AND OTHER COMBUSTIBLE MATERIALS A CONSIDERABLE DISTANCE FROM THE APPLIANCE. DO NOT OVERFIRE - IF HEATER OR CHIMNEY CONNECTOR GLOWS, YOU ARE OVERFIRING. INSPECT AND CLEAN CHIMNEY FREQUENTLY - UNDER CERTAIN CONDITIONS OF USE, CREOSOTE BUILDUP MAY OCCUR RAPIDLY. DO NOT PASS CONNECTOR PIPE THROUGH COMBUSTIBLE WALLS OR CEILINGS. DO NOT OBSTRUCT BENEATH THE HEATER.

☐ JAN ☐ FEB ☐ MAR ☐ APR ☐ MAY ☐ JUN ☐ JUL ☐ AUG ☐ SEP ☐ OCT ☐ NOV ☐ DEC ☐ 2019 ☐ 2020 ☐ 2021 ☐ 2022

U.S. ENVIRONMENTAL PROTECTION AGENCY: Certified to comply with 2020 particulate emission standards using crib wood. X.XX Grams per hour.

WOOD CLASSIC DIMENSIONAL DRAWINGS

All dimensions are in inches.

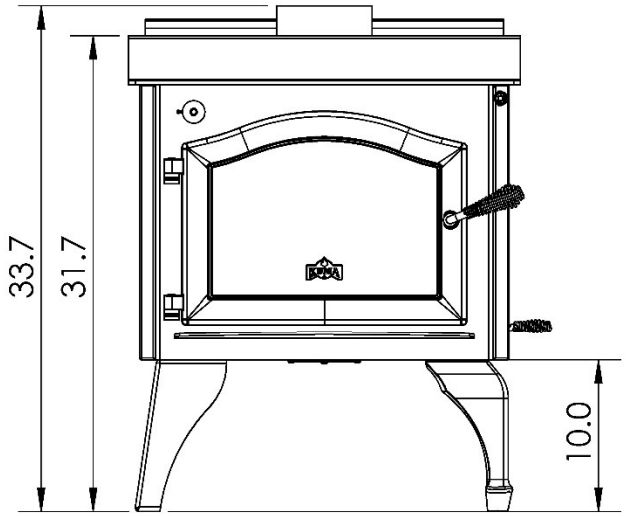

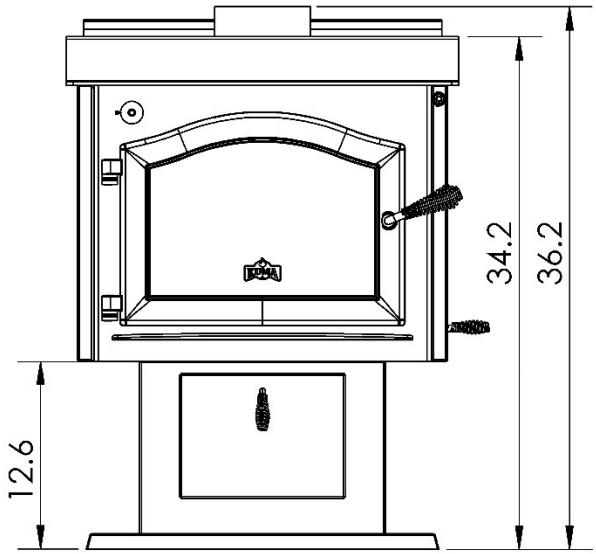

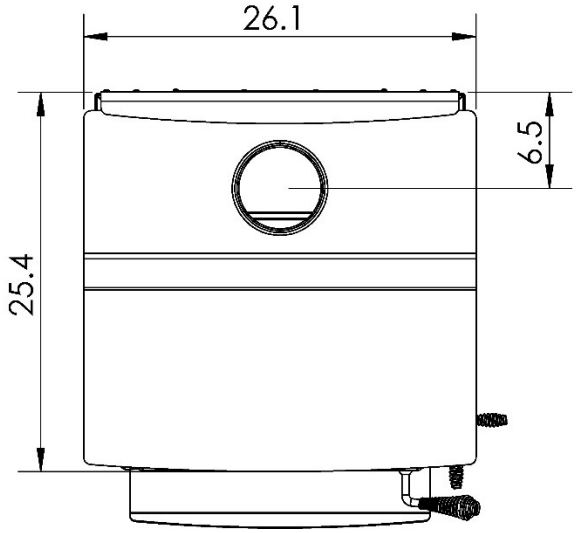

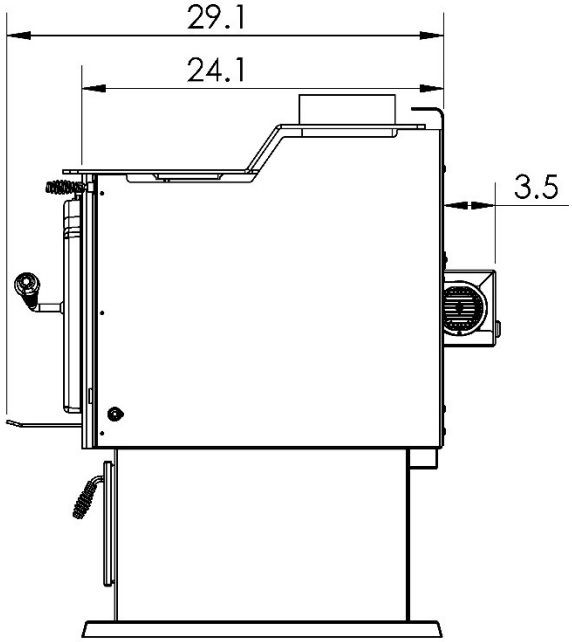

ASHWOOD DIMENSIONAL DRAWINGS

All dimensions are in inches.

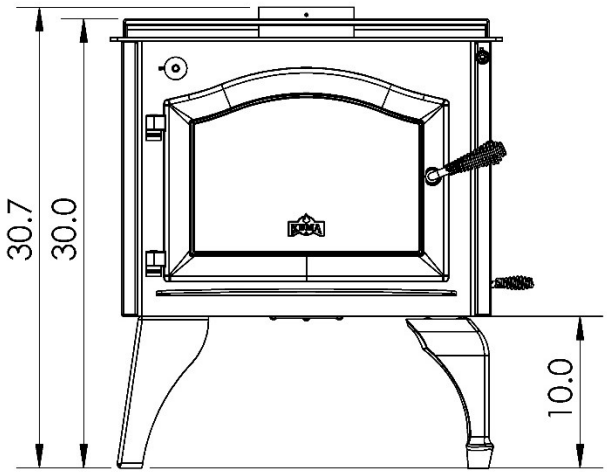

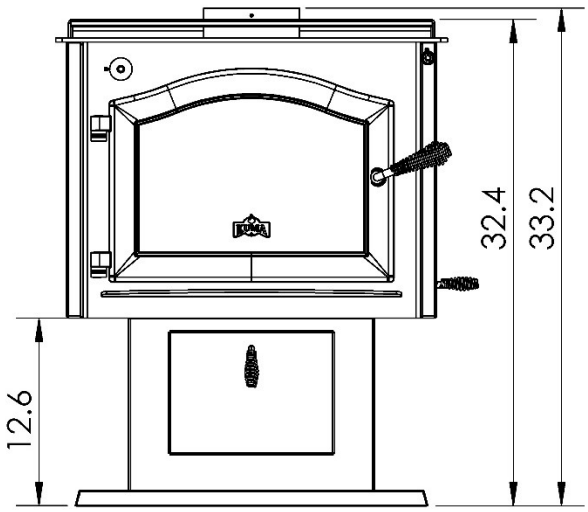

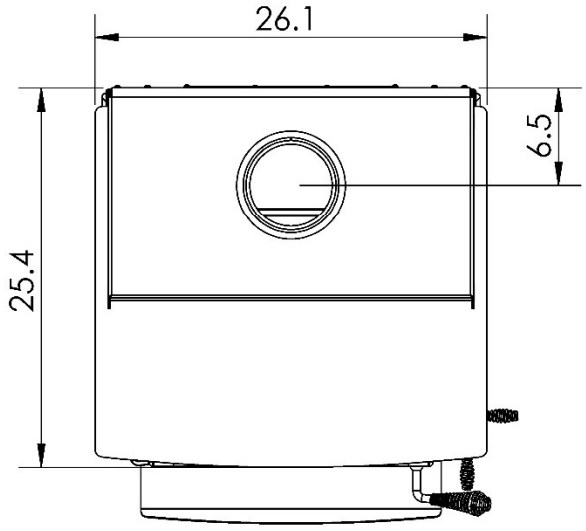

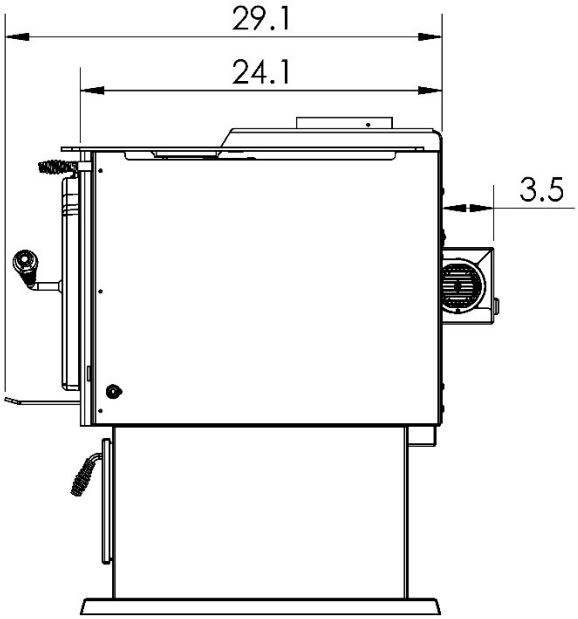

CAMBRIDGE DIMENSIONAL DRAWINGS

All dimensions are in inches.

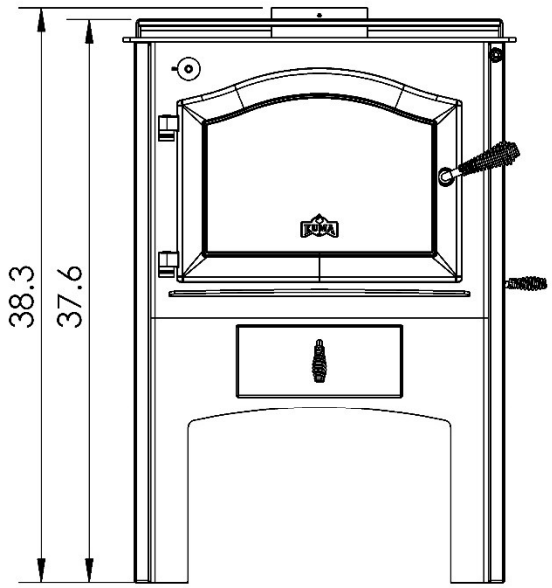

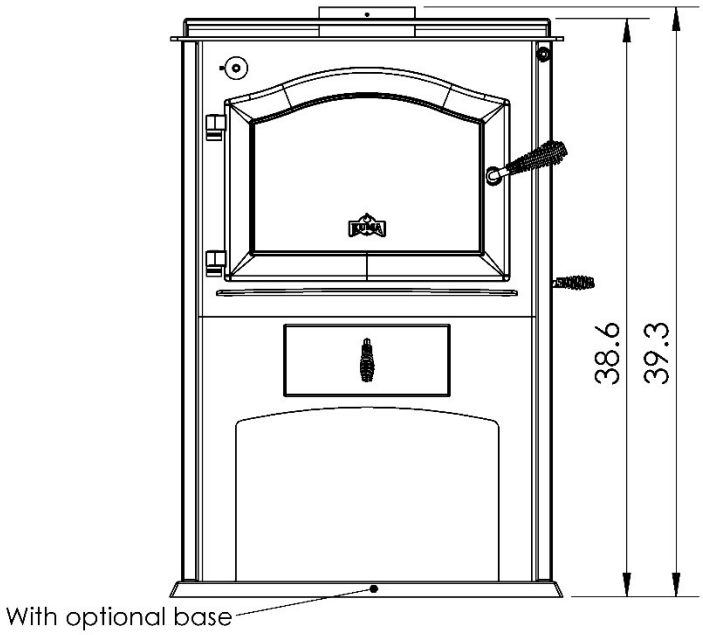

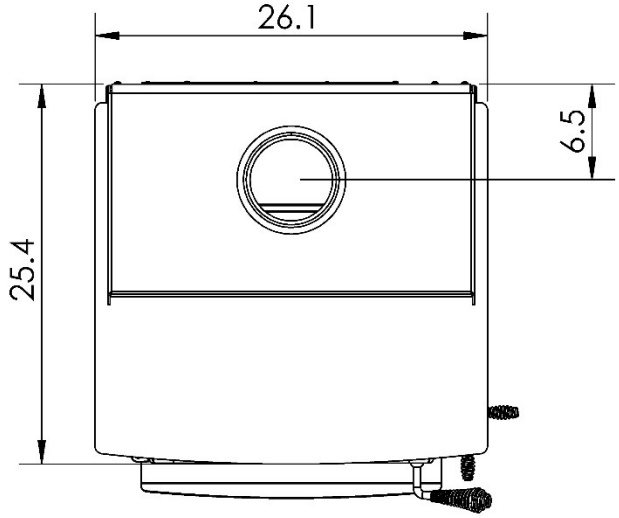

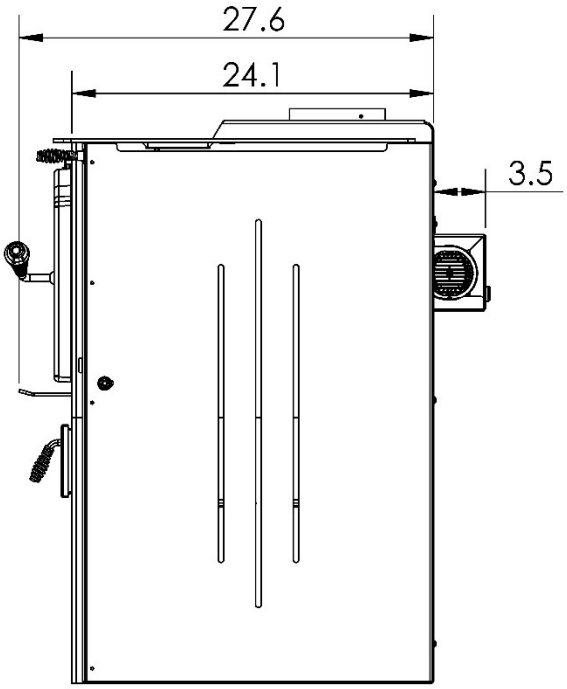

MINIMUM CLEARANCE REQUIREMENTS

Pipe clearances (A,C,E) are measured to the outside diameter of the pipe. Pipe diameter will vary by brand so when planning your installation, make sure the stove clearances (B,D,F) AND the pipe clearances (A,C,E) are equal to or greater than the minimum clearances. Always follow local building codes. These clearances may be reduced only by using approved methods found in NFPA 211.

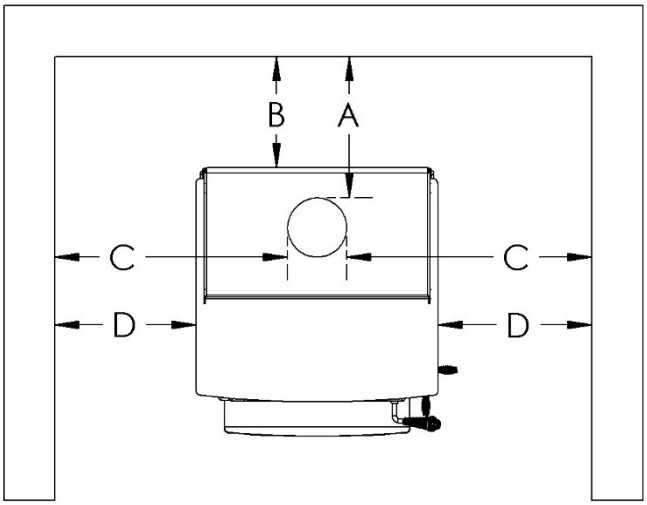

	Minimum Clearance with single-wall pipe	Minimum clearance with double-wall pipe
A	15″	10″
B	11.5″	7″
C	24.5″	23.5″
D	14.5″	14″
E	15″	14.5″
F	5″	5″
L	18.5″	18.5″
N	84″	84″

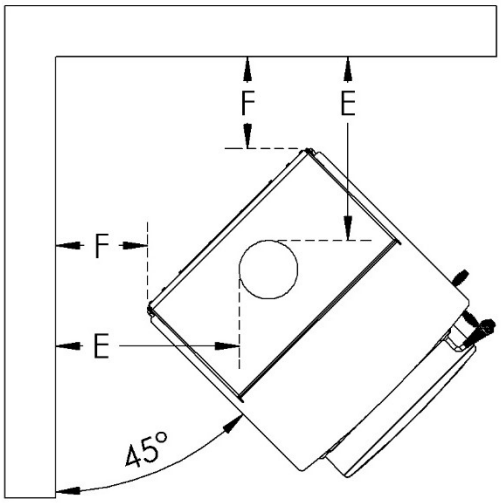

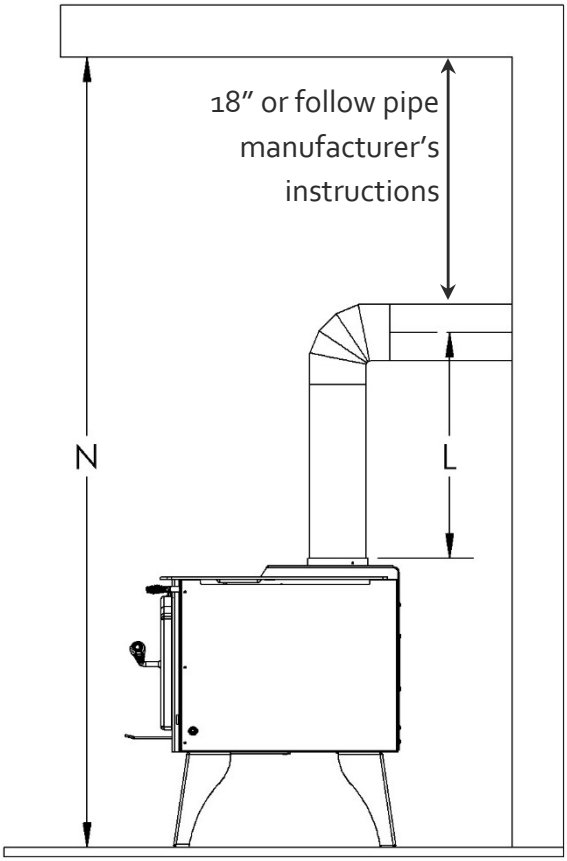

Alcove Dimensions: (must use double-wall pipe)	Minimum 56″ wide	Minimum 84″ tall

CASCADE DIMENSIONAL DRAWINGS

All dimensions are in inches.

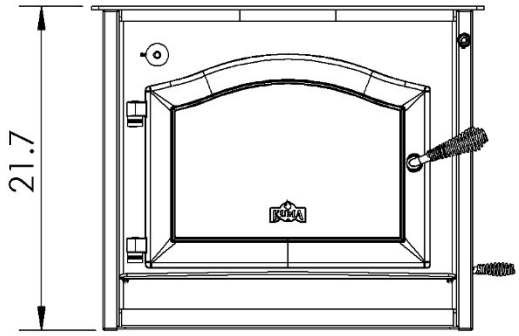

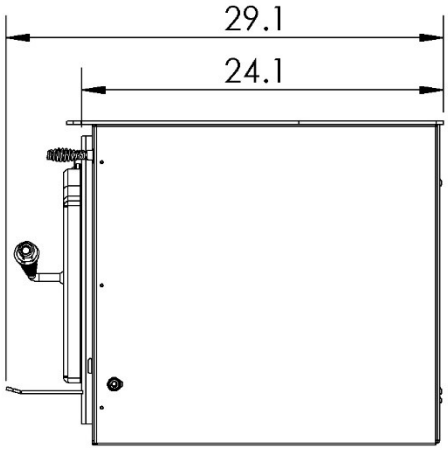

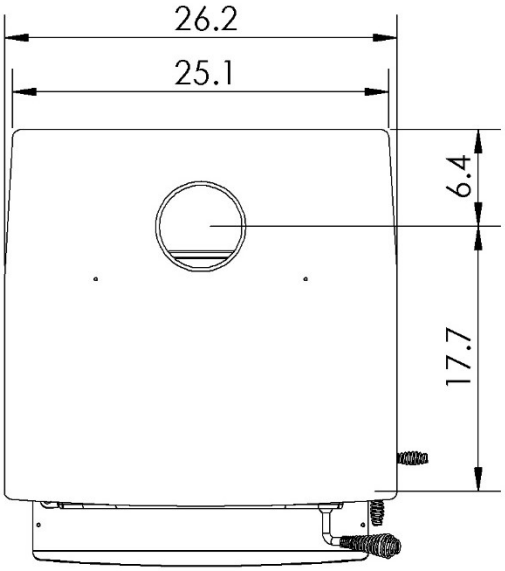

CASCADE MINIMUM CLEARANCE REQUIREMENTS

Side clearances are to the side wall of the insert. Top clearances are to the top plate of the insert.

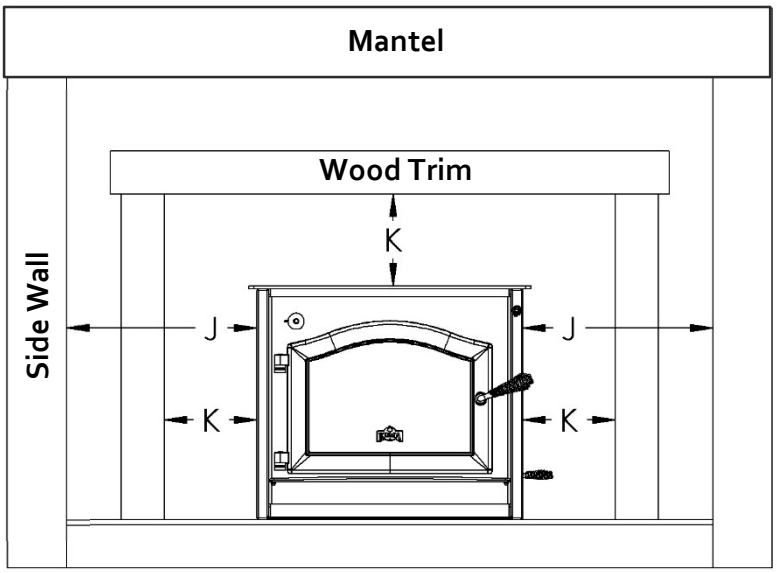

Minimum Clearances	
J – Insert to side wall	15″
K – Insert to wood trim. Trim must be no thicker than 3/4″	8.5″

MANTEL CLEARANCE

Your mantel can be 12″ deep or less. A 12″ mantel must be a minimum of 19.25″ above the top plate of the insert. If your mantel is shallower than 12″ you can use the chart below to determine the minimum height above the top plate of the insert.

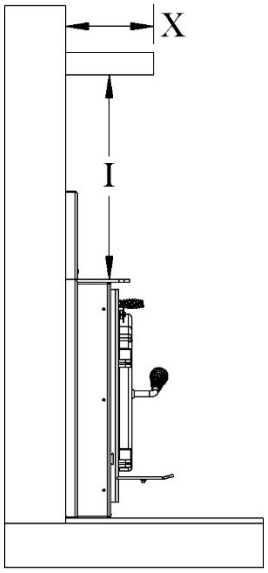

Mantel Depth (X)	Minimum Clearance (I)
3	14.25
4	14.875
5	15.375
6	16
7	16.5
8	17.125
9	17.625
10	18.25
11	18.75
12	19.25

- It is highly recommended that this stove is installed by a qualified professional certified by the National Fireplace Institute.
- The structural integrity of the floor, walls and ceiling/roof must be maintained. Use additional bracing if required. Never cut a load bearing wall or engineered truss.
- NEVER INSTALL A STOVE IN A SLEEPING ROOM
- This stove is heavy: Get help from another person and use proper lifting techniques

The safety standards referenced in this manual are easy to find online. Products that meet these standards will be readily available from your dealer. Refer to this glossary of terms for a better understanding of these standards:

Standard	Description
UL 103	Covers the safety requirements for factory-built (metal)chimneys that vent wood stoves. Chimney manufacturers can either comply with a 1700° or a 2100° flue-gas temperature test.
UL 103HT	Chimney manufacturers that choose to comply with the 2100° flue-gas temperature test will receive the designation of a 103HT chimney system. HT stands for High Temperature and virtually all modern wood stoves will require this type of chimney.
UL 1777	Covers the safety requirements for chimney liners that are installed into masonry fireplaces. Your chimney liner will meet the safety requirements of UL 1777 only if the installation instructions for the liner are followed.
NFPA 211	A publication put out by the National Fire Protection Association that details the proper installation of wood stoves, chimneys, fireplaces, and venting systems.

FLOOR PROTECTION REQUIREMENTS

Floor protection must be non-combustible. Floor protection must be underneath the stove and extend to the sides and front of the stove as shown below. Side protection (G) is measured to the top plate of the stove. Front protection (H) is measured to the face of the stove.

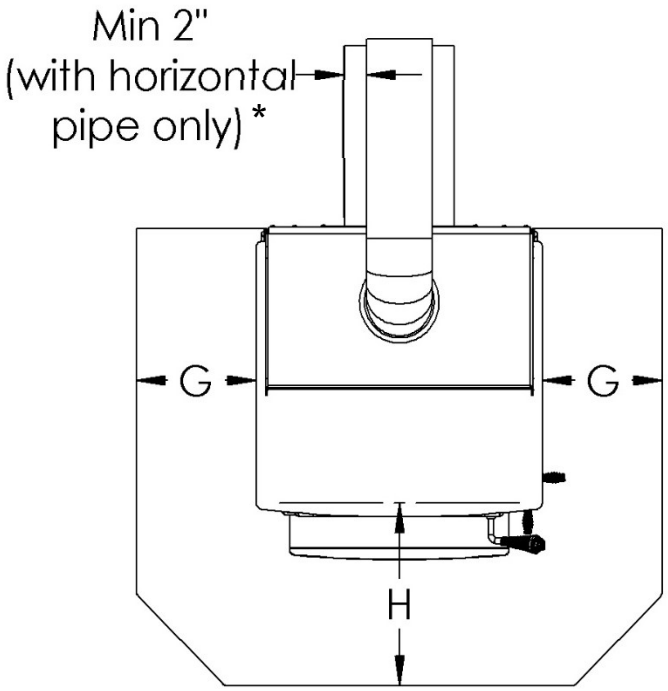

G	H	Type
6″	16″	Type 1 (ember protection) No insulation R-value required.

***Through Wall Installations: Hearth must extend underneath and 2″ to either side of the horizontal connector pipe.**

STOVE ASSEMBLY

Uncrate the stove. Each piece of the stove will be included in a separate box. Follow the instructions located in each box to install the components of the stove. Assemble the stove in the following order:

1. Lay the stove on to its back
2. Install the Ash Pan Kit (optional)
3. Install the Legs or Pedestal Kit
4. Carefully set the stove upright
5. Install the catalyst and flame diffuser
6. Install the door
7. Install the blower (optional)

INTAKE AIR REQUIREMENTS

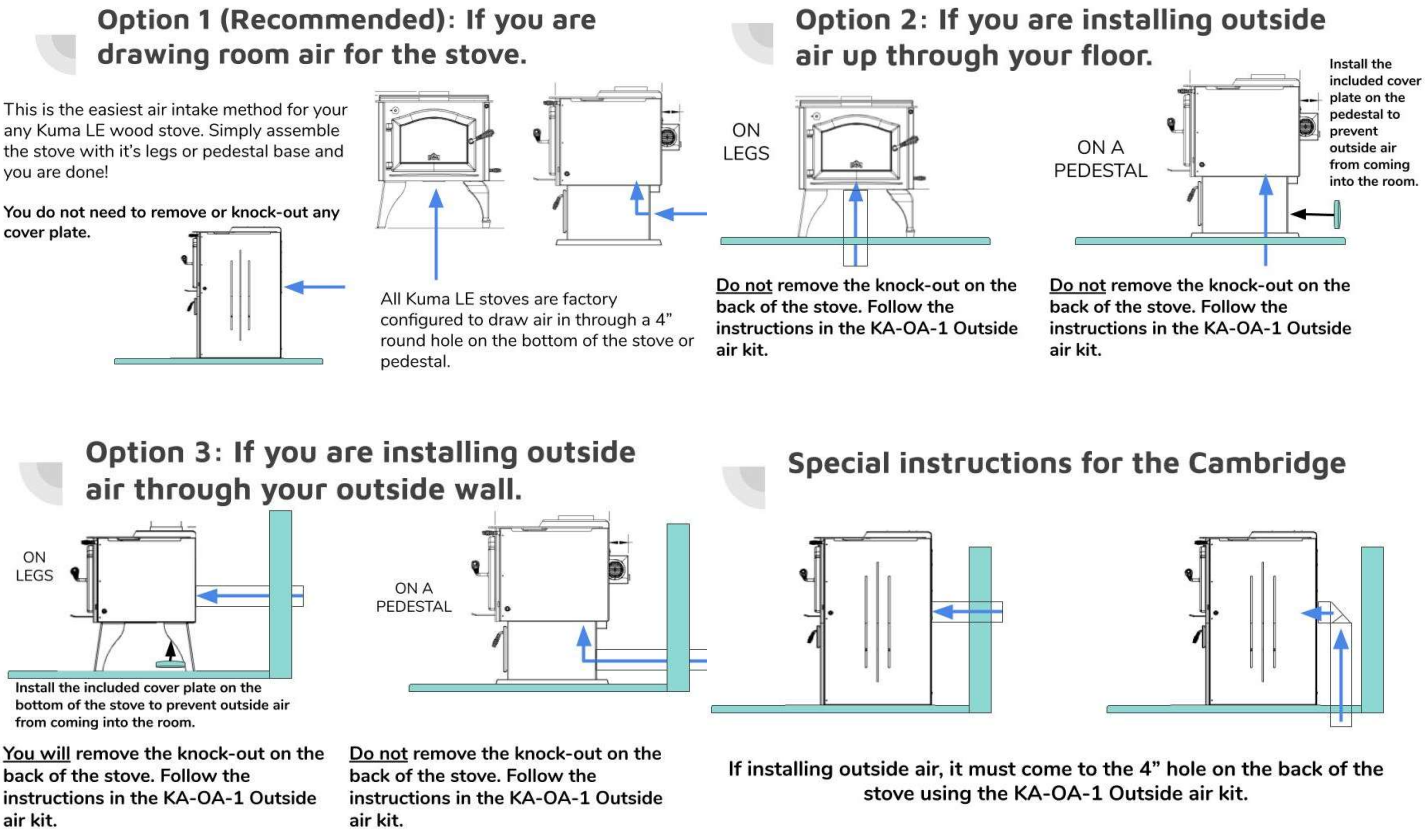

CHIMNEY AND CONNECTOR PIPE REQUIREMENTS

A properly installed and maintained venting system is critical to the safe operation of your wood stove. This stove may be connected to a factory built **all fuel chimney system** that has been safety tested to the UL-103HT standard or to a lined **masonry chimney** that meets the standards of NFPA 211. The **connector pipe** is the portion of the venting system that connects the stove to the chimney system. Chimney connector must be 24ga. single wall black stove pipe or a listed double wall connector pipe. Listed double wall connector pipe is required for mobile home installation.

When choosing the location for your stove, decide on a central location in the main living area of the home. Uninhabited areas of the home such as an uninsulated basement or a garage would be an inefficient location for the heater. Also consider not placing the chimney too close to your neighbors or in a valley that would cause a nuisance or unhealthy outdoor air quality. For proper draft, the chimney must exit the roof a minimum of 3 feet and at least 2 feet above any portion of the roof that is within 10 feet of the chimney.

Flue Height Recommendations	
No offsets in the chimney	14 ft
30° or 45° offsets in the chimney	15 ft
90° offsets in the chimney	16 ft.
90° offsets with 2-3 feet of horizontal run	20 ft.
90° offsets into exterior chimney	22 ft.

WHEN CONNECTING TO AN ALL-FUEL CHIMNEY SYSTEM

- For complete installation instructions, carefully follow the installation manual that came with your all fuel chimney system.
- Your chimney must meet the UL-103HT standard. Do not mix different brands of chimney parts.
- Do not use connector pipe to pass through an attic, closet, wall, floor or ceiling.
- Use only pre-fabricated listed chimney and connector pipe. Field fabricated or "makeshift" parts could result in a chimney or house fire.
- Inspect all chimney parts for damage. Do not use any damaged chimney parts

An all-fuel chimney system consists of prefabricated metal chimney parts that have been designed and tested for use with modern wood stoves. Examples of 103 HT systems include:

- **DuraTech manufactured by DuraVent**
- **Excel manufactured by ICC Chimney**
- **Ultra Temp manufactured by Selkirk**
- **Temp/Guard manufactured by Metal-Fab**

When choosing a location for your chimney you will need to study the clearance requirements for both the stove and the chimney. Many chimney systems require a 2" air space around the pipe. **Refer to the clearance diagrams in section 2 for minimum clearances around this stove.** You will need to install supports, braces, shielding and firestops according to the chimney manufacturer's recommendations. When passing the chimney through an attic space an insulation shield must be used to ensure that no insulation can contact the chimney. For safety, the chimney must penetrate the roof a minimum of 3 feet AND must be at least 2 feet higher than any part of the roof that is within 10 feet of the chimney. For proper draft, the venting system (chimney + connector pipe) should be at least 14 feet from the stove top to the venting cap. If you live in a snowy region and you have a metal roof, consider adding snow breaks or diverters to your roof to prevent damage from sliding snow and ice.

Scan to see the Kuma snow diverter engineered for metal roofs:

ADDITIONAL REQUIREMENTS FOR MANUFACTURED (MOBILE) HOMES

- The structual integrity of the mobile home floor, wall and ceiling/roof must be maintained.
- Do not install in a sleeping room of a mobile home.

- ☐ An outside air kit (KA OA 1) is required for all mobile home installations. Follow the instructions located in the box.
- ☐ Double wall connector pipe is required for all mobile homes.
- ☐ Using 8-gauge ground wire and appropriate connectors, you must drill through the hearth and connect the stove to the metal frame underneath the mobile home.
- ☐ When required by local code, you will need to fasten the stove to the floor of the mobile home.

Typical installation of an all fuel chimney system

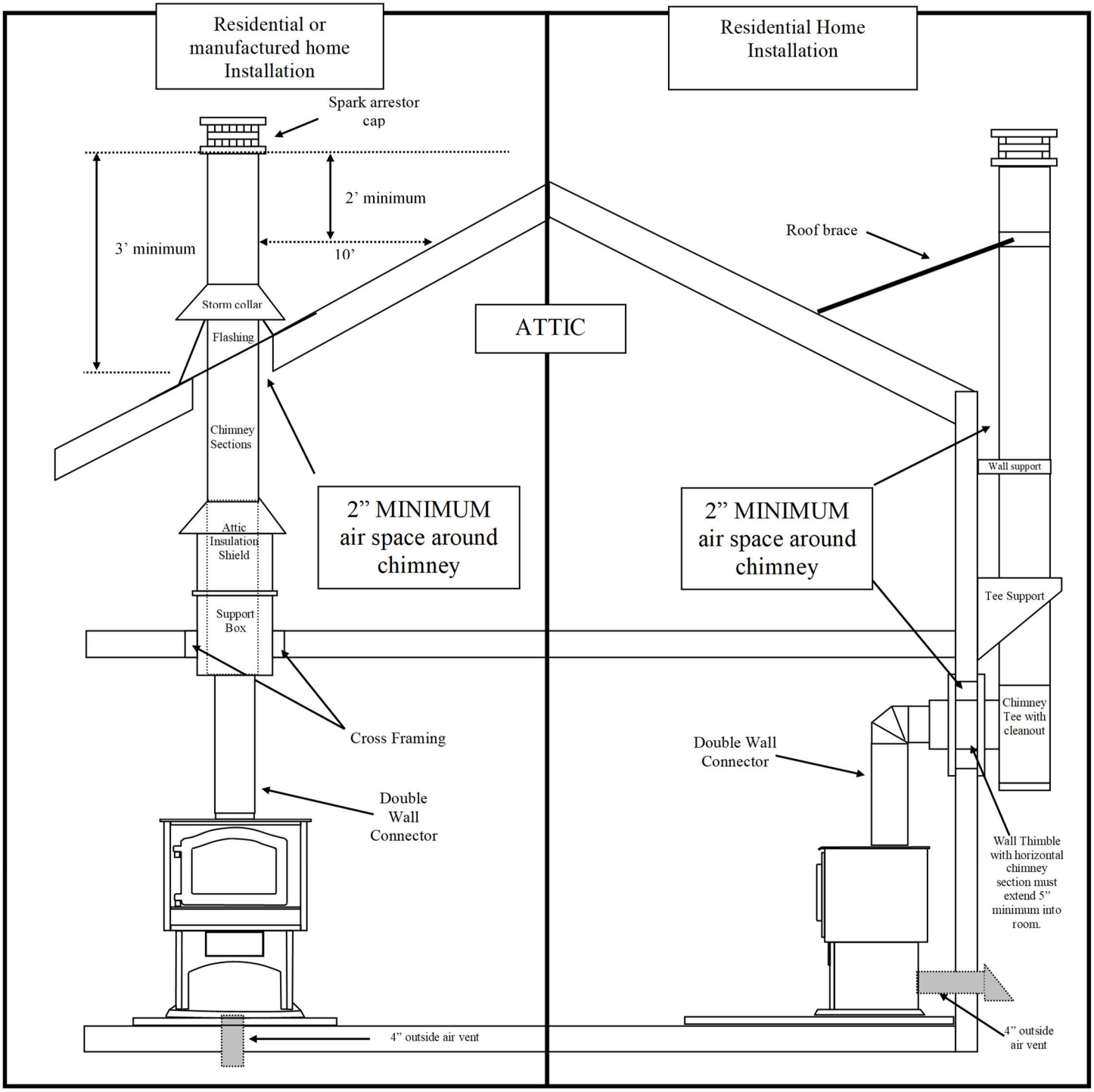

WHEN CONNECTING TO A MASONRY CHIMNEY

🔥 WHEN PENETRATING A COMBUSTIBLE WALL TO CONNECT TO A MASONRY CHIMNEY YOU MUST BE CERTAIN THAT THE WALL PASS THROUGH IS A SAFE AND CODE APPROVED METHOD such as the NFPA 211 standard. See Figure 6-7.5 from the **NFPA 211-2016, *Standard for Chimneys*** below

Your masonry chimney must be built according to an approved method of construction such as the NFPA 211 standard. Visit nfpa.org for free access to the standard.

1. Install a flue liner that meets the type HT requirements (2100°) per the UL 1777 standard.
2. Have a certified chimney inspector clean and inspect your chimney to make sure that there are no code violations, cracks, damaged mortar joints, or blockages. If your chimney is damage or does not meet code requirements, you may need to re-line or re-build your chimney.
1. Kuma recommends that an insulated chimney liner always be installed into a masonry chimney for improved performance and ease of cleaning. Chimney liners should not be smaller than 6" diameter or the equivalent cross-sectional area of 28 square inches. Any reduction in flue size may result in smoking or poor performance.
3. Equally important to the construction of the chimney is the connection between the stove and the chimney. When passing through a combustible wall, use the following diagram to make sure that it is a safe method.

FIGURE 6-7.5 Chimney connector systems and clearances from combustible walls for residential heating appliances.

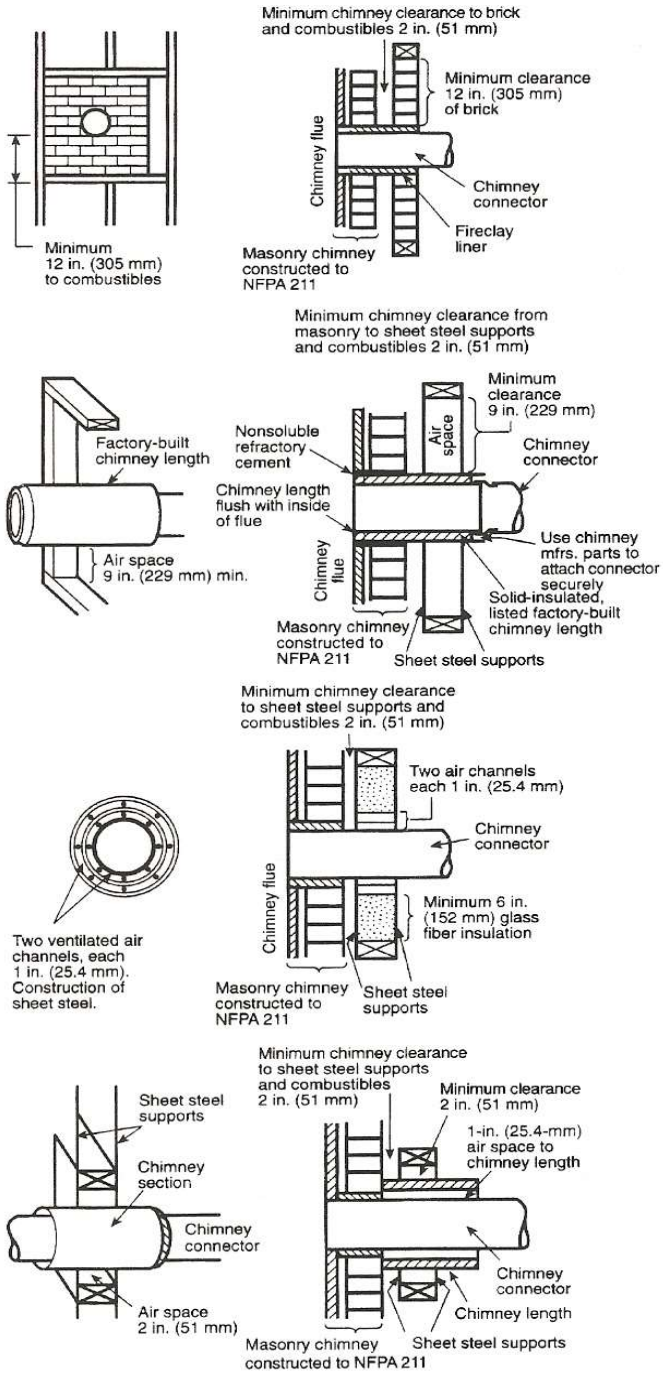

System		Clearance (in.)/(mm)
A	Minimum 3.5 in. (90 mm) thick brick masonry wall framed into combustible wall with a minimum of 12-in. (305-mm) brick separation from clay liner to combustibles. Fireclay liner (ASTM C 315, *Standard Specification for Clay Fire Linings*, or equivalent), minimum ⅝-in. (16-mm) wall thickness, shall run from outer surface of brick wall to, but not beyond, the inner surface of chimney flue liner and shall be firmly cemented in place.	12/305
B	Solid-insulated, listed factory-built chimney length of the same inside diameter as the chimney connector and having 1 in. (25.4 mm) or more of insulation with a minimum 9-in. (229-mm) air space between the outer wall of the chimney length and combustibles. The inner end of the chimney length shall be flush with the inside of the masonry chimney flue and shall be sealed to the flue and to the brick masonry penetration with non-water-soluble refractory cement. Supports shall be securely fastened to wall surfaces on all sides. Fasteners between supports and the chimney length shall not penetrate the chimney liner.	9/229
C	Sheet steel chimney connector, minimum 24 gauge [0.024 in. (0.61 mm)] in thickness, with a ventilated thimble, minimum 24 gauge [0.024 in. (0.61 mm)] in thickness, having two 1-in. (25.4-mm) air channels, separated from combustibles by a minimum of 6 in. (152 mm) of glass fiber insulation. Opening shall be covered, and thimble supported with a sheet steel support, minimum 24 gauge [0.024 in. (0.61 mm)] in thickness. Supports shall be securely fastened to wall surfaces on all sides and shall be sized to fit and hold chimney section. Fasteners used to secure chimney section shall not penetrate chimney flue liner.	6/152
D	Solid-insulated, listed factory-built chimney length with an inside diameter 2 in. (51 mm) larger than the chimney connector and having 1 in. (25 mm) or more of insulation, serving as a pass-through for a single wall sheet steel chimney connector of minimum 24 gauge [0.024 in. (0.61 mm)] thickness, with a minimum 2-in. (51-mm) air space between the outer wall of chimney section and combustibles. Minimum length of chimney section shall be 12 in. (305 mm). Chimney section concentric with and spaced 1 in. (25.4 mm) away from connector by means of sheet steel support plates on both ends of chimney section. Opening shall be covered, and chimney section supported on both sides with sheet steel supports of minimum 24 gauge [0.024 in. (0.61 mm)] thickness. Supports shall be securely fastened to wall surfaces on all sides and shall be sized to fit and hold chimney section. Fasteners used to secure chimney section shall not penetrate chimney flue liner.	2/51

Additional requirements:

1. Insulation material used as part of wall pass-through system shall be of noncombustible material and shall have a thermal conductivity of 1.0 Btu-in./hr-ft^2-°F (4.88 kg-cal/hr-m^2-°C) or less.
2. All clearances and thicknesses are minimums; larger clearances and thicknesses shall be permitted.
3. Any material used to close up an opening for the connector shall be of noncombustible material.
4. A connector to a masonry chimney, except for System B, shall extend in one continuous piece through the wall pass-through system and the chimney wall to the inner face of the flue liner, but not beyond.

Reprinted with permission from NFPA 211-2016, *Standard for Chimneys, Fireplaces, Vents, and Solid Fuel-Burning Appliances*, Copyright © 2015, National Fire Protection Association, Quincy, MA. This reprinted material is not the complete and official position of the NFPA on the referenced subject, which is represented only by the standard in its entirety which may be obtained through the NFPA website at www.nfpa.org.

- It is highly recommended that this insert is installed by a qualified professional certified by the National Fireplace Institute.
- The structural integrity of the floor, walls and ceiling/roof must be maintained.
- NEVER INSTALL AN INSERT IN A SLEEPING ROOM
- This insert is heavy: Get help from another person and use proper lifting techniques

FLOOR PROTECTION REQUIREMENTS

If the bottom of the insert is raised at least 4" from the combustible floor, then a hearth that provides ember protection only (no R-value) is sufficient. If the bottom of the insert is less than 4" from the combustible floor, then Type 2 thermal protection (with an R-value of 1.4) is required.

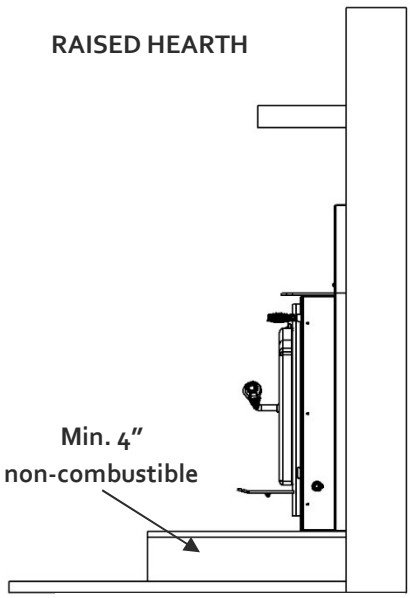

TYPE 1 - Ember protection

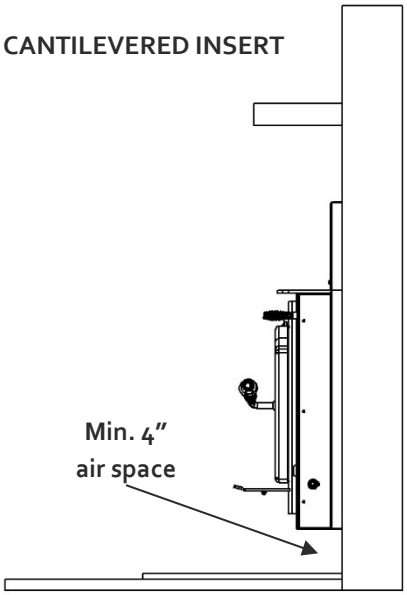

TYPE 1 - Ember protection

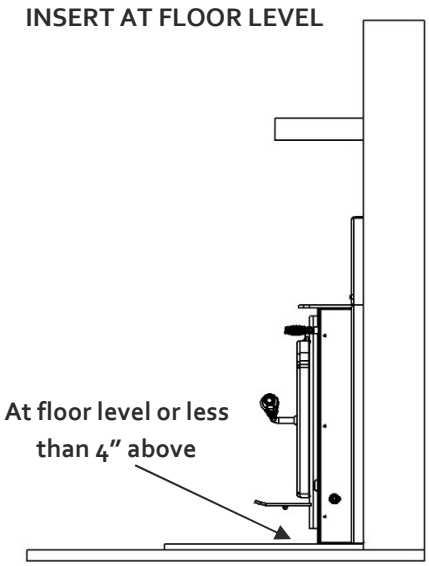

TYPE 2 – 1.4 R-Value

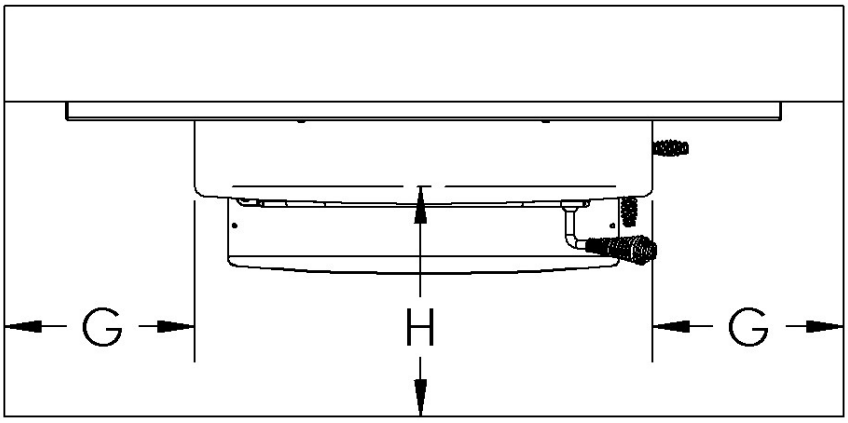

Minimum Hearth Size	
G	6"
H	16"

INSTALLING THE INSERT

Uncrate the insert. Each piece of the insert will be included in a separate box. Follow the instructions located in each box to install the components of the insert. Install the insert in the following order:

1. Install the chimney liner according to the manufacturer's instructions.
2. Carefully place the insert into the fireplace and level.
3. Connect the liner to the insert.
4. Install the fireplace surround (this kit includes hardware for leveling the insert).
5. Install the catalyst and flame diffuser.
6. Install the door.
7. Install the blower (optional)

INTAKE AIR REQUIREMENTS

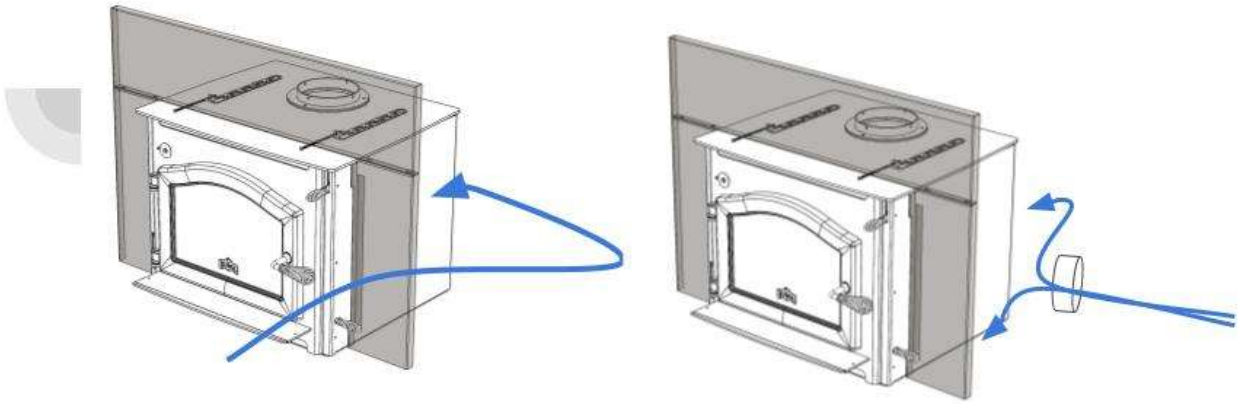

ROOM AIR: Travels through the louvres on the sides of the surround trim and enters a 4" round hole at the back of the insert.

OUTSIDE AIR: Do not modify a fireplace to bring in outside air. If outside air is already supplied to the fireplace then you may seal the room air louvres on the side of the surround trim and make sure that an adequate amount of fresh air can passively enter the 4" round hole at the back of the insert.

FIREPLACE CHIMNEY REQUIREMENTS

A properly installed and maintained venting system is critical to the safe operation of your wood insert. This insert may be connected, with a liner, to a **masonry fireplace** that meets the standards of NFPA 211. This insert cannot be installed in a factory-built fireplace or into a mobile home. Some homes will have multiple fireplaces: When choosing the location for your insert, decide on a central location in the main living area of the home. Uninhabited areas of the home such as an uninsulated basement or a garage would be an inefficient location for the heater. Also consider not using a chimney that is too close to your neighbors or in a valley that would cause a nuisance or unhealthy outdoor air quality. For proper draft, the chimney must exit the roof a minimum of 3 feet and at least 2 feet above any portion of the roof that is within 10 feet of the chimney.

Minimum Flue Height Recommendations	
No offsets in the chimney	14 ft
30° or 45° offsets in the chimney	15 ft
90° offsets in the chimney	16 ft.
90° offsets with 2-3 feet of horizontal run	20 ft.
90° offsets into exterior chimney	22 ft.

The standards referenced in this section are easy to find online and the products that meet these standards will be readily available from your dealer. Refer to this glossary of terms for a better understanding of these standards:

Standard	Description
UL 103	Covers the safety requirements for factory-built chimneys that vent wood stoves. Chimney manufacturers can either comply with a 1700° or a 2100° flue-gas temperature test.
UL 103HT	Chimney manufacturers that choose to comply with the 2100° flue-gas temperature test will receive the designation of a 103HT chimney system. HT stands for High Temperature and virtually all modern wood stoves will require this type of chimney.
UL 1777	Covers the safety requirements for chimney liners that are installed into masonry fireplaces. Your chimney liner will meet the safety requirements of UL 1777 only if the installation instructions for the liner are followed.
NFPA 211	A publication put out by the National Fire Protection Association that details the proper installation of wood stoves, chimneys, fireplaces, and venting systems.
IRC - Chapter 10	The International Residential Code covers the safety requirements for residential homes. Chapter 10 specifically covers chimneys and fireplaces

WHEN CONNECTING TO A MASONRY FIREPLACE

- This insert must be connected to a code approved (e.g. NFPA 211) masonry fireplace with a 6″ flue liner that meets the type HT requirements (2100°) per the UL 1777 standard.
- This insert cannot be installed in a factory-built fireplace or into a mobile home.

1. Your masonry fireplace and chimney must be built according to an approved method of construction such as the NFPA 211 standard. Visit nfpa.org for free access to the standard.
2. You must install a flue liner that meets the type HT requirements (2100°) per the UL 1777 standard.
3. Have a certified chimney inspector clean and inspect your chimney and fireplace to make sure that there are no code violations, cracks, damaged mortar joints, or blockages.
4. If your chimney is damaged or does not meet code requirements, you may need to re-line or rebuild your chimney.
5. Kuma recommends that an **insulated** chimney liner be installed into a masonry chimney for improved performance.
6. Chimney liners should not be smaller than 6″ diameter or the equivalent cross-sectional area of 28 square inches. Any reduction in flue size may result in smoking or poor performance.
7. Maintain all minimum clearance requirements for this insert as shown at the beginning of this section and on the listing tag.

- NEVER USE FLAMMABLE LIQUIDS TO START OR FRESHEN UP A FIRE
- CAUTION: Do not use any fuels that are not seasoned natural wood.
- Do not leave the stove unattended with the door open.
- DO NOT OVERFIRE THIS HEATER – Attempts to achieve heat output rates that exceed heater design specifications can result in permanent damage to the heater and to the catalytic combustor.

YOUR 1ST FIRE (BREAK-IN PERIOD)

Paint Curing: When building your 1st fire, be careful to start small and increase the heat slowly over a 4 to 5-hour period. The paint on the stove cures with heat and needs to be done slowly. As the paint cures, it gives off a smell and even sometimes a visible haze into the room. Make sure the area is well ventilated during the curing operation. The smell will subside after a few hours of operation.

Popping and creaking: As the metal heats up and cools down, it moves. This movement can cause a normal popping or creaking sound that will likely decrease after the first several weeks.

Performance: It is normal for the first few fires to seem a bit lazy. As moisture evaporates from the brick, the fire will become more active. A layer of ash in the bottom of the stove will also help to keep your coal bed hot and active. A good thick coal bed and full load of wood are key to optimum performance.

SELECTING WOOD

The leading cause for creosote build-up in the stove or chimney is moisture in the wood. Wood should be protected from rain and seasoned for 1 full year prior to being used. Your wood must have a moisture content of 20% or less. You will need to use a moisture meter to determine the moisture content of the wood. The recommended wood length for this heater is 18". This heater is designed to burn natural wood only. Higher efficiencies and lower emissions generally result when burning air dried seasoned hardwoods, as compared to softwoods or to green or freshly cut hardwoods.

DO NOT BURN:

a. Garbage;
b. Lawn clippings or yard waste;
c. Materials containing rubber, including tires;
d. Materials containing plastic;
e. Waste petroleum products, paints or paint thinners, or asphalt products;
f. Materials containing asbestos;
g. Construction or demolition debris;
h. Railroad ties or pressure-treated wood;
i. Manure or animal remains;
j. Salt water driftwood or other previously salt water saturated materials;
k. Unseasoned wood; or
l. Paper products, cardboard, plywood, or particleboard.

Burning these materials may result in release of toxic fumes or render the heater ineffective and cause smoke. The prohibition against burning these materials does not prohibit the use of fire starters made from paper, cardboard, saw dust, wax and similar substances.

LIGHTING A FIRE

Step 1: Slide the air control out away from the stove until it stops. The air is now fully open for a starting a fire.	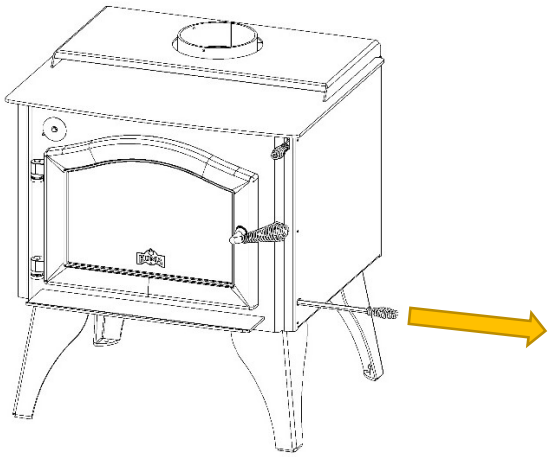
Step 2: Pull the bypass control open: a short pull toward yourself **(about ¾")** and down will open the bypass allowing the chimney to heat quickly. This also prevents smoke from coming into the room when the door is open.	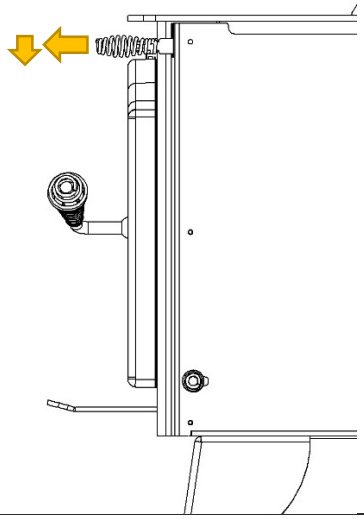
Step 3: Open the door and place kindling, Firestarter, and small pieces of wood in the stove. Do not use a grate or elevate the fire – Build the fire directly on the fire brick. When starting a fire, you should never use un-split pieces of wood unless they are small, such as twigs and branches. Shown to the right is an example of what is called a "top down" fire: Start by loading larger pieces of wood into the firebox bottom then stack progressively smaller pieces so that the kindling pieces are at the top of the stack. You may use a fire starter such as shredded paper on top of the kindling.	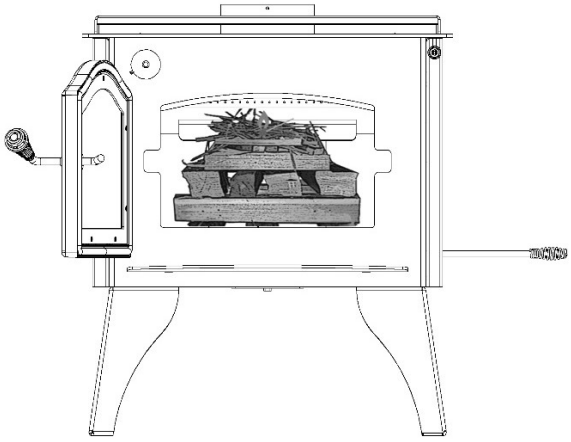

Step 4: Light the Fire, you can optionally leave the door slightly cracked open to aid in the start-up of your stove. Close the door once the fire is well lit. **Do not leave the stove unattended with the door open.**

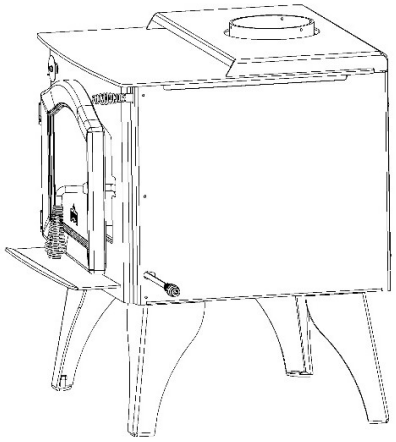

Step 5: After 15 minutes, or once the catalytic thermometer enters the active range, close the bypass control engaging the combustor (Simply lift the bypass control and you will feel it return to the closed position). Leave the air control open for 20-30 minutes so that the fire becomes well established. If you shut the stove down too soon, it may go out or the combustor may stop working.

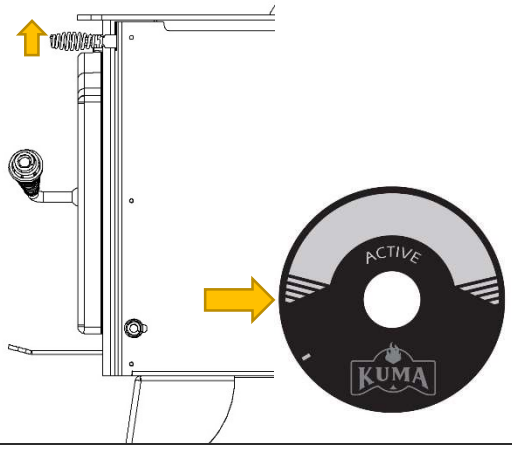

Step 6: After 20-30 minutes, begin to regulate the heat output and burn rate by sliding in the air control. Use the table below to adjust your rate of burn:

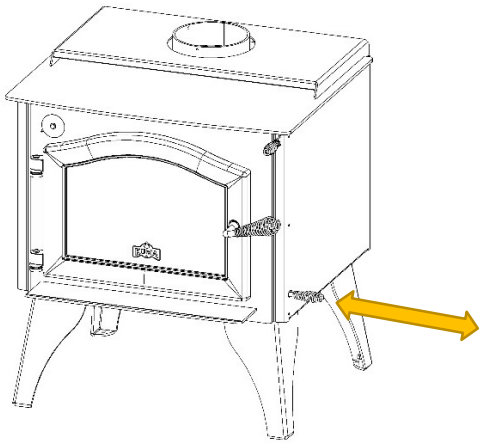

Desired Burn Rate	Position of the air control	Approximate Burn Time
Low Burn	Fully Closed	7-9 hours
Medium Burn	About ¼" Open	4-6 hours
Start Up or High Burn	Fully Open	2-3 hours

ADDING MORE WOOD TO THE FIRE

1. Slide the air control to fully open and pull open the bypass just as you would do when you are starting a fire (see steps 1 & 2 above). Wait 5 minutes to allow the coals to become active and to allow the smoke to draft up the chimney.
2. Slowly open the wood loading door and rake the coals breaking up any larger pieces. Add wood then shut the door.
3. Once the catalytic thermometer is in the active range AND your wood is well lit, close the bypass control re-engaging the combustor.
4. Leave the air control open for 10-20 minutes so that the fire becomes well established then begin to adjust your rate of burn. This is especially important during the refueling and rekindling of a cool fire, or a fire that has burned down to the charcoal phase.

ADDITIONAL TIPS FOR BURNING EFFICIENTLY

Burning wood produces both visible emissions (e.g. particulate matter or smoke) as well as invisible emissions (e.g. Carbon Monoxide). When operating your stove, periodically check for visible emissions coming from the chimney and adjust the burn rate and fuel load to reduce emissions.

Remember to let your stove burn open for 20-30 minutes each time you reload it with wood. Shutting the air control prematurely can cause excessive creosote in the chimney. The temperature in the stove and the gases entering the combustor must be raised to between *500* ° to *700* °F for catalytic activity to be initiated. During the startup of a cold stove, a medium to high firing rate must be maintained for about *20* minutes. This ensures that the stove, catalyst, and fuel are all stabilized at proper operating temperatures. Even though it is possible to have gas temperatures reach *600* °F within *2* to *3* minutes after a fire is started, if the fire is allowed to die down immediately, it may go out or the combustor may stop working. Once the combustor starts working, heat generated in it by burning the smoke will keep it working.

This wood heater has a manufacturer-set minimum low burn rate that must not be altered. It is against federal regulations to alter this setting or otherwise operate this wood heater in a manner inconsistent with operating instructions in this manual. Small hot fires produce less creosote than long, low smoldering fires. When you start your stove or reload your stove with more wood, open the draft fully and burn the stove at high burn for 10-30 minutes to heat up the chimney and secondary burn system. This ensures that when the draft control is pushed in for a lower, longer burn, the stove will burn cleaner.

UNDERSTANDING DRAFT

Draft is the force which moves exhaust from the appliance up through the chimney. A properly drafting chimney will pull the correct amount of air into the stove and will provide you with excellent performance and heat output. Inadequate draft may cause back puffing of smoke into the room and creosote formation in the chimney. Inadequate draft will cause the appliance to leak smoke and carbon monoxide into the room through appliance and chimney connector joints. Factors that reduce draft are:

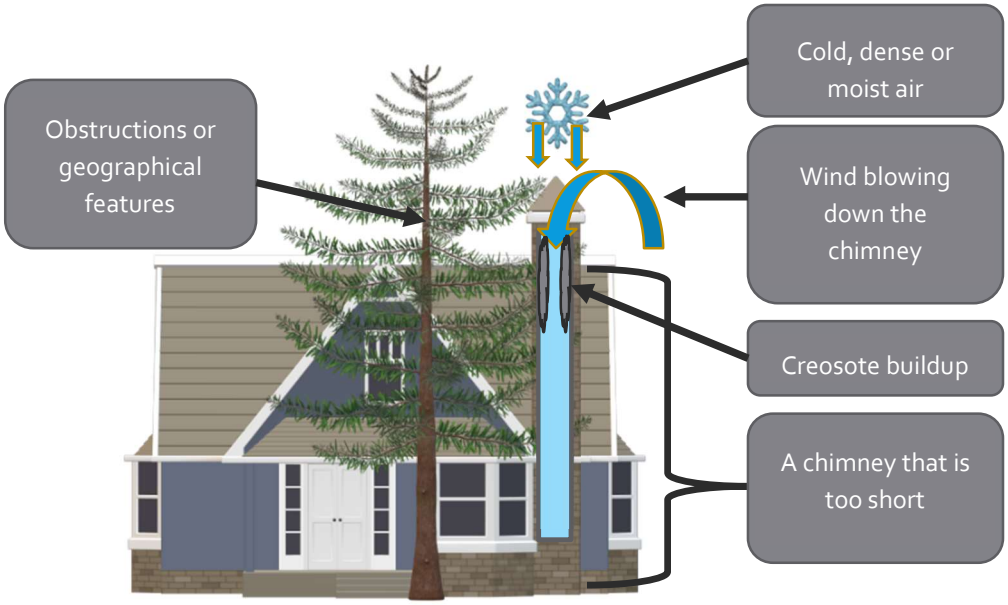

Too much draft may cause excessive temperatures in the appliance and may damage the internal components of the stove. An uncontrollable burn or excessive temperature indicates excessive draft. Factors that increase draft are:

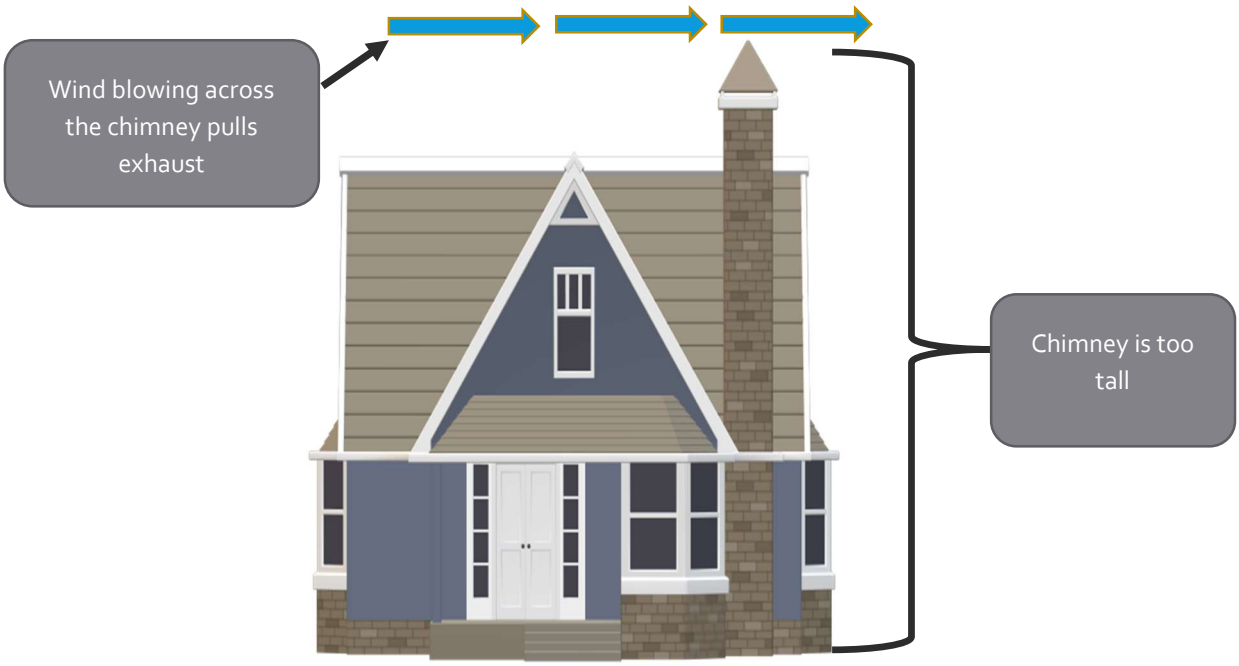

BEYOND THE BASICS - DETAILED INFORMATION ABOUT YOUR NEW WOOD STOVE

You learned above, the simple process of starting and reloading your stove. This section provides a more in-depth look at what is going on inside your stove as you operate it. This stove's design combines a thermal secondary burn system (burn tubes) with a catalytic combustion system to create an easy to use, ultra-low emission hybrid appliance. Read about each feature below to help you operate your stove efficiently and beautifully. You can see both systems illustrated in the cut-away drawing below:

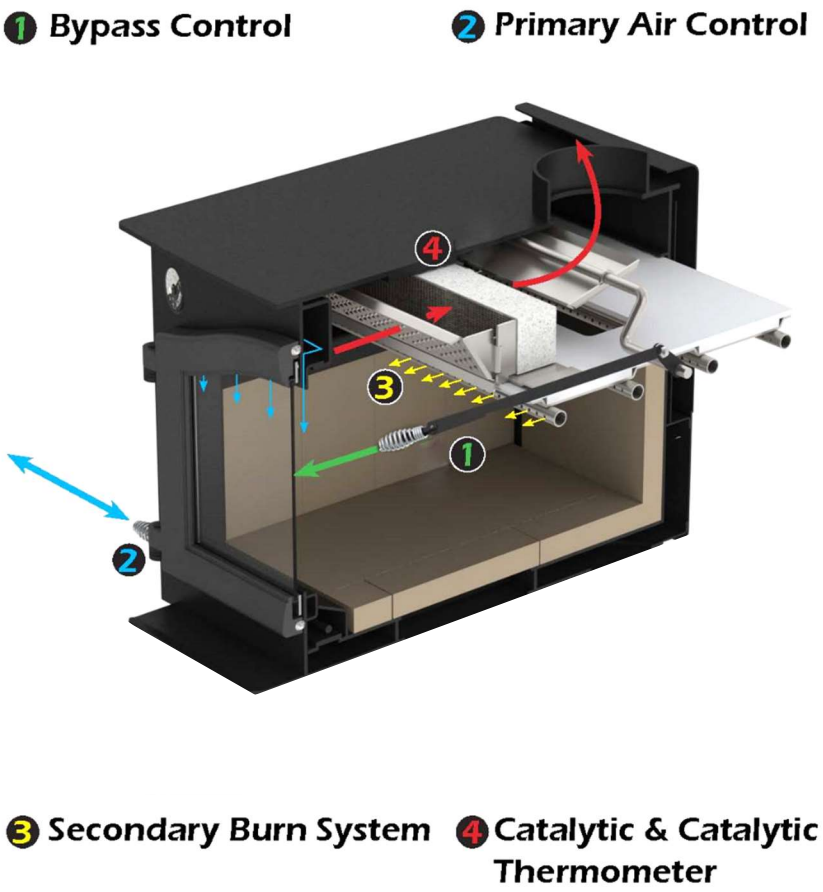

1. **Bypass Control** – Located on the upper right side of the stove, the bypass control allows smoke and heat to temporarily bypass the hybrid burn system. This helps to quickly heat the chimney and prevent smoke from coming into the room when the door is open.

   Start/Reload Position – This position helps to quickly heat the chimney and the catalyst during start-up by allowing some heat to bypass the catalyst. This position also allows you to reload the stove while preventing smoke from coming into the room. A short pull forward **(about ¾")** and down will engage the bypass in the Start/Reload Position.

   Run Position – This is the normal operating position for the stove. Your stove should always be in this position unless you are starting or reloading the stove. Simply lift the bypass control and you will feel it return to the run position.

2. **Primary Air Control** – Located on the lower right side of the stove, this control changes the rate of burn for the stove. Slide out for high heat output and slide in for low heat output. You can operate the stove at any burn rate in between high and low.

    a. Always set the air control to high for 20 to 30 minutes when starting or after refueling your stove. This allows the stove and chimney to come up to operating temperature.

    b. When set to high, the primary air washes the glass as it feeds the fire to help keep it clean. If your glass has built up any smoke deposits from slow burning, set the air control to high for 20 to 30 minutes.

    c. Never over fire the stove by leaving the air control on high for too long (see Catalytic and Catalytic Thermometer below).

3. **Secondary Burn System** – There are no controls for this system. The stove will automatically draw air into the secondary burn tubes to re-burn smoke before it reaches the catalyst.

4. **Catalytic & Catalytic Thermometer** – The catalytic is a metal honeycomb shaped device that cleans up most of the remaining smoke before it travels up the chimney. The catalytic thermometer shows you the correct temperature to operate the stove at.

    a. Always operate the stove in the active range (anywhere in the light grey area is perfectly normal).

    b. **<u>If the probe travels above the active range:</u>** You are exceeding the recommended operating temperature of the catalyst (1300°F). It is fine to go above the recommended operating range for short periods of time.

    c. Use the Primary Air Control to change the temperature of the stove.

    d. **If the probe travels below the active range:** Your stove is becoming too cool to operate efficiently: reload your stove before the catalytic combustor becomes inactive.

SECTION 5 - CATALYST INFORMATION

TAMPER WARNING

This wood heater contains a catalytic combustor which needs periodic inspection and replacement for proper operation. It is against federal regulations to operate this wood stove in a manner inconsistent with the operating instructions in this manual, or if the catalytic element is deactivated or removed.

CATALYST TYPE

The combustor supplied with this wood stove is an Applied Catalysts ACI-5M combustor. Please refer to section 6 for catalyst maintenance. Refer to section 7 for catalyst troubleshooting. Refer to section 8 for catalyst warranty information.

CATALYST MONITORING

It is important to periodically monitor the operation of the catalytic combustor to ensure that it is functioning properly and to determine when it needs to be replaced. A non-functioning combustor will result in a loss of heating efficiency, and an increase in creosote and emissions. Following is a list of items that should be checked on a periodic basis:

1. Combustors should be visually inspected at least three times during the heating season to determine if physical degradation has occurred. Actual removal of the combustor is not recommended unless more detailed inspection is warranted because of decreased performance. If any of these conditions exists, refer to Catalyst Troubleshooting section of this owner's manual.
2. This hybrid heater is equipped with a temperature probe to monitor catalyst operation. Properly functioning combustors typically maintain temperatures in excess of 500°F, and often reach temperatures in excess of 1,000°F. If catalyst temperatures are not in excess of 500°F, refer to the Catalyst Troubleshooting section of this owner's manual.
3. You can get an indication of whether the catalyst is working by comparing the amount of smoke leaving the chimney when the smoke is going through the combustor and catalyst light-off has been achieved, to the amount of smoke leaving the chimney when the smoke is not routed through the combustor (bypass mode).
    - Step 1—Light stove in accordance with instructions in section 4.
    - Step 2—With smoke routed through the catalyst, go outside and observe the emissions leaving the chimney.
    - Step 3—Engage the bypass mechanism and again observe the emissions leaving the chimney.
    - Significantly more smoke will be seen when the exhaust is not routed through the combustor (Start/Reload Position).

READING THE CATALYST PROBE

Follow the instructions in section 4 to build and maintain a fire. During normal operation the probe should read in the active range. If, during normal operation, the probe reads less than the active range, the stove should be refueled following the instruction in section 4. If the probe is climbing above the active range, you need to decrease the primary air control so that you do not over-fire the stove or catalyst.

This wood heater needs periodic inspection and repair for proper operation.

FIRE EXTINGUISHER

Every home should have a type A:B:C fire extinguisher that is checked and maintained on a regular basis. The National Fire Protection Agency (nfpa.org) recommends having an extinguisher on each floor of your home. The location of the extinguisher should be known to everyone in the house.

ASH DISPOSAL

Empty the ashes when they get 3" to 4" deep. Make sure that the fire is out - Never try to empty the ashes when the stove has an active or full fire, doing so will over heat the stove. Always wear gloves while handling hot ashes. The ashes may be removed by pulling out the ash drawer (if equipped on freestanding models) or scooping out the loading door of the stove. To operate the ash drawer:

1. Turn the ash drawer handle to the left or right to release the latch
2. Pull out the drawer and empty the ashes safely as described below.
3. Clean out any ashes that may have fallen into the cavity that the ash drawer slides in to**. If any ashes remain in the cavity it can prevent the ash pan from sealing, resulting in excessive air to the fire.**
4. Slide the ash drawer back into place, push in to compress the spring and turn the handle down.
5. **NEVER OPERATE THE STOVE WITH THE ASH DRAWER REMOVED OR OPENED.**

Leave 1" of ash in the bottom of the stove to help maintain a hot charcoal bed. Dump the ashes into a metal container with a tight-fitting lid and keep away from the house. **NEVER EMPTY ASHES INTO A COMBUSTIBLE CONTAINER SUCH AS A PLASTIC BUCKET OR PAPER BAG. NEVER LEAVE ASHES NEAR THE HOUSE OR GARAGE.**

CHIMNEY INSPECTION AND CLEANING

When wood is burned slowly, it produces tar and other organic vapors, which combine with expelled moisture to form creosote. The creosote vapors condense in the relatively cool chimney flue of a slow-burning fire. As a result, creosote residue accumulates on the flue lining. When ignited, this creosote makes an extremely hot fire. The chimney connector and chimney should be inspected at least once every two months during the heating season to determine if a creosote buildup has occurred. If creosote has accumulated, it should be removed to reduce the risk of a chimney fire. Failure to remove creosote can result in a chimney fire which can damage both the chimney and the stove. We recommend having the chimney cleaned and inspected by a licensed, professional chimney sweep. If the chimney is damaged, it must be replaced.

GASKET INSPECTION AND REPLACEMENT

Inspect the gaskets around the door, glass and ash pan (if equipped) at least once a year. Check for areas that are frayed or missing. Press the gasket with your finger to see if the gasket is somewhat soft. Gaskets that are hard will not conform to the stove and may leak air. When the stove is cold, check to see if the glass moves up and down or left to right. If the glass moves, you may need to tighten the screws around the

retaining ring or replace the gasket. Replacement gaskets and service are available through your local dealer or by visiting kumastoves.com.

GLASS CLEANING AND REPLACEMENT

Never clean the glass when it is hot. Your stove is equipped with an air wash system that will self-clean. Burn the stove on high for 20 to 30 minutes every time you add fuel to the fire. This will reduce the creosote on the glass. If needed, clean the glass with a soft cloth and stove glass cleaner. Do not use steel wool, sandpaper or abrasive cleaners. If you close the door on a piece of wood that is too long, you will break the glass. If the glass breaks in your stove, shut off the primary air control and let the fire burn out. Do not leave the stove unattended with a broken glass. To replace broken glass:

1. Carefully lift the door from the stove and place it on a clean soft work area.
2. Using a Phillips screw driver, remove the retaining ring screws and the retaining ring.
3. Carefully discard the broken glass. CAUTION: BROKEN GLASS WILL BE SHARP.
4. Clean the door and set the new piece of glass into the door so that the logo reads correctly from the front side of the door. Kuma replacement glass will have the gasket pre-installed.
5. Replace the retaining ring and screws. Be careful to tighten the screws evenly and tighten just enough to hold the glass firmly

SECONDARY BURN TUBE REPLACEMENT

The burn tubes are one of two burn systems that causes your stove to operate efficiently, this stove also uses a catalyst to clean some of the remaining smoke before it leaves the stove. If your burn tubes are not physically degraded (falling apart, crushed or excessively warped) then they are functioning and will not need replacement. To remove a burn tube, un-bolt the tube using a 7/16" wrench. Pull the tube to the right then down and out of the stove. Replace the tube and re-install the bolt the holds the tube in place.

CATALYST INSPECTION, CLEANING AND REPLACEMENT

The catalyst is one of two burn systems that causes your stove to operate efficiently, this stove also uses secondary burn tubes to re-burn smoke before it reaches the catalyst. To inspect your catalyst, unhook the flame deflector from the face of the baffle by pulling it forward. If your catalyst has not physically degraded (falling apart, crushed or excessively warped) then it is likely functioning and will not need replacement. If your Catalytic combustor becomes plugged with ash, clean the catalyst **in place** using a soft brush or for deeper cleaning use a slight to moderate (~20-30 psi.) amount of air pressure blowing any ash through the cells of the catalyst. To replace the catalyst:

1. Remove the flame guard from the face of the baffle by pulling forward. Set aside.
2. Pull the catalyst out using the 2 handles on the front of the catalyst. You may need to wiggle the catalyst to loosen the gasket material.
3. Remove any gasket material that was left in the baffle cavity.
4. Your new catalyst will be wrapped in a gasket material that is held in place with masking tape and a stretch film. There is no need to remove the tape or the stretch film.
5. Slide the new catalyst into the cavity until it stops. If you see any gaps larger than 1/8" around the sides or top of the catalyst you will need to slide the catalyst out and wrap those areas with additional

gasket material (you can use masking tape to hold it in place). The gasket provided will expand 2-3 times its original thickness once heated to seal gaps.

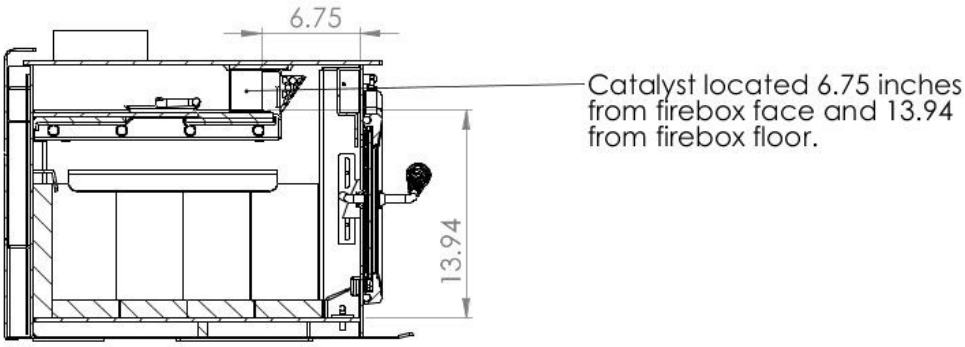

BRICK AND CERAMIC INSULATION REPLACEMENT

Bricks and ceramic insulation should be inspected annually and replaced if necessary. Cracked bricks are fine if they remain in place. Bricks that are crumbling or falling out need to be replaced. The ceramic insulation is located on the top of the stove's baffle and is designed to keep heat in the stove and increase efficiency. If the insulation is in place it can be left alone. If the insulation becomes torn during cleaning, simply lay it back together tightly in that area. If the insulation tears to multiple pieces, it should be replaced. To replace the ceramic insulation, remove the 3 burn tubes allowing the entire baffle to come down and out of the stove. Mark or otherwise note the order of the tubes so they can be replaced in the same location. Place the insulation blanket on top of the baffle so that the cut-out aligns with the bypass opening in the baffle. Re-install the baffle and the 4 burn tubes.

MAINTENANCE DIAGRAMS & PARTS LIST

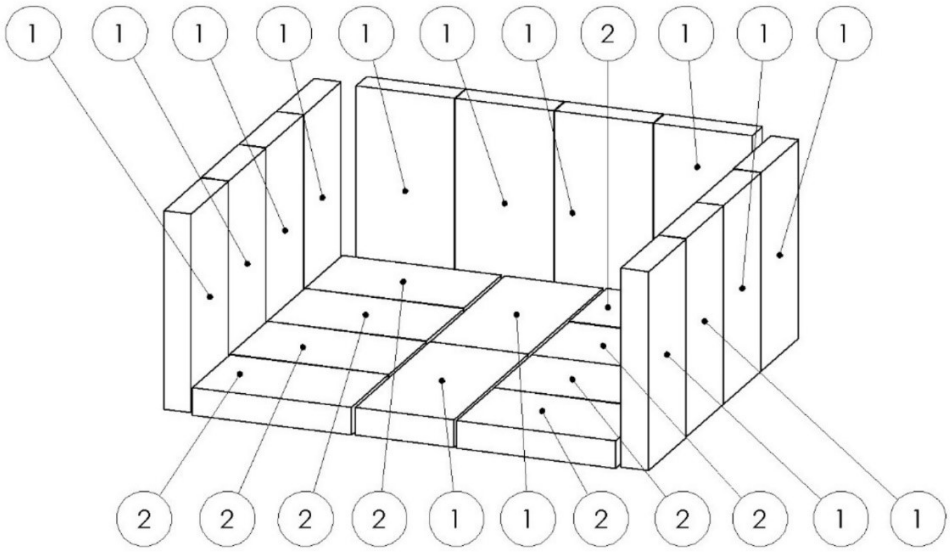

ID	Item #	Description
1	KR-BR-01	Brick, standard size. 9" x 4-1/2".
2	KR-BR-251	Brick, cut size. 7-1/2" x 4-1/2"

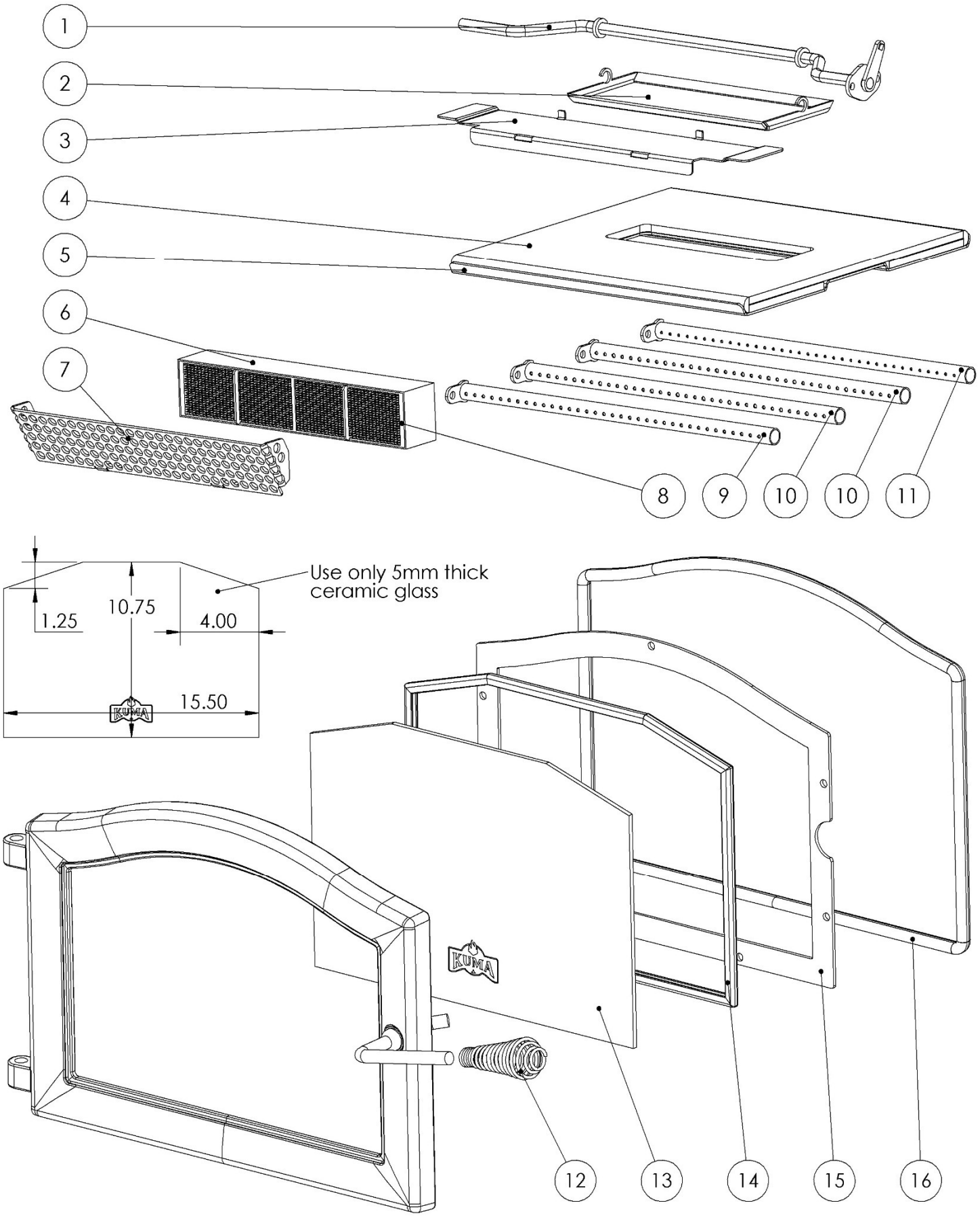
1
2
3
4
5
6
7
8
9
10
10
11
Use only 5mm thick
ceramic glass
1.25
10.75
4.00
15.50
KUMA
KUMA
12
13
14
15
16

Parts and support are available from your local dealer, by contacting Kuma Stoves at 888-714-5294 or visiting kumastoves.com and clicking on the support tab.

ID	Item #	Description
1	KR-BH-25	Bypass hinge assembly, stainless steel. Fits: ASH/WCL/CAM/CAS.
2	KR-BP-01	Bypass plate, stainless steel. Fits: All models.
3	KR-CS-01	Catalytic support tray, stainless steel. Fits: All models.
4	KR-IN-25	Ceramic baffle insulation set. Fits: ASH/WCL/CAM/CAS.
5	KR-BF-25	Baffle plate, stainless steel. Includes Insulation blanket (KR-IN-25) Fits: ASH/WCL/CAM/CAS.
6	KR-GK-01	Catalytic gasket, expanding. Fits: All models with catalytic KR-CT-01.
7	KR-FG-01	Catalytic flame guard, stainless steel. Fits: All models.
8	KR-CT-01	Catalytic combustor, metal alloy. Includes Gasket (KR-GK-01)Fits: All models.
9	KR-BT-251	Baffle burn tube, front. Fits: ASH/WCL/CAM/CAS.
10	KR-BT-252	Baffle burn tube, middle front or middle rear. Fits: ASH/WCL/CAM/CAS.
11	KR-BT-253	Baffle burn tube, rear. Fits ASH/WCL/CAM/CAS.
12	KR-SP-02G	Door handle, gold. Fits: All KA-DR-25 and KA-DR-18 doors.
12	KR-SP-02P	Door handle, pewter. Fits: All KA-DR-25 and KA-DR-18 doors.
13	KR-GL-25	Door glass, includes gasket. Fits: All KA-DR-25 doors.
14	KR-GK-034	Gasket, 3/4" fiberglass channel, 5 feet. Fits: All glass sizes.
15	KR-GR-25	Glass retainer. Fits: All KA-DR-25 doors.
16	KR-GK-058	Gasket, 5/8" fiberglass, 8 feet. Fits: All doors and ash pans.
n/a	KR-SP-01P	Control handle, pewter. Fits: All models.
n/a	KR-SP-01G	Control handle, gold. Fits: All models.
n/a	KR-AH-01	Gasket adhesive, fiberglass to metal. Fits: All doors and ash pans.

STOVE BURNS LAZY AT START UP.

1. The chimney is still cool, allow more time to warm up.
2. Wood is not seasoned (still green). Wood should sit for about 1 year, split and loosely stacked if it was cut green.
3. Wood is well seasoned but has a lot of surface moisture. Your wood supply must be covered. Check your tarps or other covering to see that no rain or snow is getting to your wood. Wood should be covered on top, but open on the sides to allow air movement to aid in drying.
4. Stove is being shut down too soon. Leave the air open for longer. (do not leave the stove unattended with door open) See Section 4 for lighting instructions.

STOVE BACK-PUFFS OR SMOKES INTO THE ROOM AT START UP.

1. Make sure the bypass rod is pulled open.
2. Chimney is cold. Cold chimneys can produce a "reverse draft" where cold air is rushing down the chimney into the stove. Open a door or a window for about 5 minutes to equalize pressure in the house then try restarting with small strips of newspaper. Using small strips of newspaper or an approved fast burning fire starter and small pieces of kindling will create heat faster to help reverse the cold air.
3. Chimney and/or the chimney cap needs to be cleaned. Your chimney should be checked and cleaned, if necessary, every few months. Even a small amount of buildup can cause a draft restriction, for example: ¼ inch of buildup on the side wall of an 8" chimney reduces the effective area of the chimney by about 20%. Pay close attention to the chimney cap, especially if it has a screen. Screened chimney caps can become blocked enough to restrict flow in just a few weeks.

STOVE SMOKES OUT THE DOOR WHEN IT IS OPEN.

1. The door was opened before the bypass rod was pulled open. Open the bypass for 1 minute before opening the door.
2. The door was opened too quickly. Crack the door open just a small amount and let the stove "breathe" a few seconds before slowly opening all the way.
3. Chimney and/or the chimney cap needs to be cleaned. Your chimney should be checked and cleaned, if necessary, every few months. Even a small amount of buildup can cause a draft restriction, for example: ¼ inch of buildup on the side wall of a 6" chimney reduces the effective area of the chimney by about 20%. Pay close attention to the chimney cap, especially if it has a screen. Screened chimney caps can become blocked enough to restrict flow in just a few weeks.

STOVE WON'T SHUT DOWN.

1. Check the main door gasket and glass gasket for proper seal. See section 6 for instructions on checking your gaskets.
2. Chimney is too tall, see Section 3 for flue height recommendations.

STOVE WON'T BURN HOT ENOUGH. LAZY BURN.

1. Wood is not seasoned (still green). Wood should sit for about 1 year, split and loosely stacked if it was cut green.
2. Wood is well seasoned but has a lot of surface moisture. Your wood supply must be covered. Check your tarps or other covering to see that no rain or snow is getting to your wood. Wood should be covered on top, but open on the sides to allow air movement to aid in drying.

3. Chimney and/or the chimney cap needs to be cleaned. Your chimney should be checked and cleaned, if necessary, every few months. Even a small amount of buildup can cause a draft restriction, for example: ¼ inch of buildup on the side wall of an 8" chimney reduces the effective area of the chimney by about 20%. Pay close attention to the chimney cap, especially if it has a screen. Screened chimney caps can become blocked enough to restrict flow in just a few weeks.
4. Catalytic combustor is plugged with ash. Clean the catalyst in place using a slight to moderate (~20-30 psi.) amount of air pressure blown through the baffle grid removing ash from the catalyst cells.
5. Atmospheric conditions. Occasionally, barometric episodes occur that affect draft, thereby affecting stove performance. If your stove has been working fine and performance drops suddenly, this is most likely the cause, and will usually go away within a few days.
6. Your fuel load may be too small or the wood size too large for the coal bed. A small bed of coals requires re-kindling to build up the heat, only put large chunks of wood on a very hot and active bed of coals.

BURN TIME TOO SHORT.

1. Your fuel load may be too small or the wood size too large for the coal bed. A small bed of coals requires re-kindling to build up the heat, only put large chunks of wood on a very hot and active bed of coals. If there are large chunks of charred wood left after the fire has gone out, the coal bed was not hot enough.
2. Fuel quality. Harder, denser woods produce longer burn times. Likewise, softer woods produce shorter burn times.
3. Check the main door gasket and glass gasket for proper seal. See for instructions on checking your gaskets.

CATALYST TROUBLESHOOTING.

Problem	Cause	Solution
Catalyst plugged with creosote	Burning wet wood or pushing in the bypass rod too soon.	Burn only dry, seasoned natural wood. Burn a hot fire to burn off the creosote buildup then brush off the face of the catalyst with a soft bristle brush.
Catalyst masked with soot or fly ash.	Pushing in the bypass rod too soon. Burning improper material such as cardboard, coal or wrapping paper.	Remove the flame guard but leave the catalyst in place. Brush off the face of the catalyst with a soft bristle brush or gently blow out the cells with a can of dusting air. Burn only dry seasoned natural wood.
Lower Efficiency	Flames contacting the catalyst from excessive draft can reduce the effectiveness of the catalyst.	Use less wood or lower the air to the stove. Install a damper to reduce draft. Do not burn material that will poison the catalyst such as colored paper, cardboard, paneling, painted or treated wood.
Catalyst is plugged with fly ash	Pushing in the bypass rod too soon. Burning material that produces fly ash and char. See section 4 for a list of improper materials	Make sure you achieve catalyst light off (see section 4) Remove the flame guard but leave the catalyst in place. Gently blow out the cells with a can of dusting air. Burn only dry, seasoned natural wood.

SECTION 8 – LIMITED WARRANTY

Our Promise:

If any maintenance items wear out in the first three years, we will supply you with the parts to fix it. For as long as you own your stove, if you ever have a defect in the material or workmanship of your stove's firebox, we will repair or replace it for you. See full details below:

Items Covered	Parts Coverage Period	Labor Coverage Period
Maintenance Items: Bricks, gasket, ceramic insulation, and paint.	3 Years	No Labor Coverage
Blowers, brick supports. All removable wear items including the ash grate, baffle plate, bypass mechanism, catalytic support tray, and catalytic flame guard.	5 Years	3 Years
Stove firebox, burn tubes, legs, glass (thermal breakage) and door casting.	Forever	3 Years

Catalyst Warranty: The combustor supplied with this heater is an Applied Catalysts ACI-5M, Long Life Combustor. Kuma part# KR-CT-01 Following is the catalytic combustor warranty supplied with this wood heater. Catalyst warranty claims should be addressed to: Kuma Stoves 50145 N. Old Highway 95 Rathdrum ID, 83858. Ph. 888-714-5294.

6-year structural warranty: Warranty claim must meet the following conditions: 1. warranty has been registered proving the date of purchase and that you are the original owner. 2. You return the catalyst to Kuma stoves: No advanced exchange is available under this warranty. 3. The catalyst has not been abused by over-firing or using unauthorized fuels. If the catalyst loses its structural integrity due to a manufacturing defect, Kuma stoves will replace the catalyst at no charge. The replacement catalyst will have a 90-day warranty coverage.

12-year performance warranty: One replacement catalyst is available for purchase from Kuma Stoves at a 50% discount from MSRP. The only condition of this pro-rated performance warranty is that your warranty has been registered proving the date of purchase and that you are the original owner. The catalyst does not need to be returned.

Warranty Coverage:

To ensure warranty coverage, it is very important that you register your Kuma Stove warranty within 30 days of purchase at kumastoves.com or fill out and return the warranty registration in your owner's packet. Operation of this stove in a manner inconsistent with the owner's manual, especially the burning of materials for which this unit is not certified by the EPA, will void the warranty. This warranty covers your new Kuma Stove from defects in material and workmanship for the period outlined in this warranty. Kuma Stoves reserves the right to replace, repair or authorize repair of any defective part at its sole discretion. This warranty is not transferrable and covers the original owner of the product from the time of purchase. All parts that have been replaced under this warranty will have a 90-day warranty coverage. The maximum value of this warranty is the original purchase price of the product. This warranty is subject to the conditions and limitations outlined below. This warranty covers stoves purchased from an authorized Kuma Stoves dealer.

Warranty Instructions:

Please contact the dealer where you purchased your stove. You may also contact Kuma stoves directly at 50145 N. Old Highway 95, Rathdrum ID 83858 or by phone at 1-888-714-5294 or contact us online at kumastoves.com. When calling, you will need to have your proof of purchase, the model name, and the serial number of your stove. When calling please remember that shipping and handling costs are not covered under this warranty.

Warranty Exclusions:

This Warranty does not cover: 1. Changes in the color of the surface of the stove as this naturally happens during the firing of the stove and is considered normal. 2. Damage to plating due to chemical cleaners, fingerprints, or scratching. 3. Shattered glass caused from wood impact. 4. Discoloration of plating or glass. 5. Expansion and contraction of the firebox causing noise. 6. Damage caused from: power surges, unauthorized modifications, using incorrect fuel and/or accelerants, shipping/handling, failure to follow the manufacturer's installation instructions, failure to follow any local building codes. 7. Damages to any product not manufactured by Kuma Stoves. 8. Any stoves ability to heat a specific area. Heating capacity is given as a guideline and is not guaranteed. 9. Shipping costs or travel time. Please talk with an authorized dealer or Kuma representative about the potential charges for travel or shipping. 10. This warranty is void in the case of abuse, over firing, unauthorized repair, alterations, improper installation and/or service.

Appendix A

FIREBOX VOLUME

KUMA STOVES; K-251 SERIES

60.533 (k)(2)(i)

FIREBOX DIMENSIONS

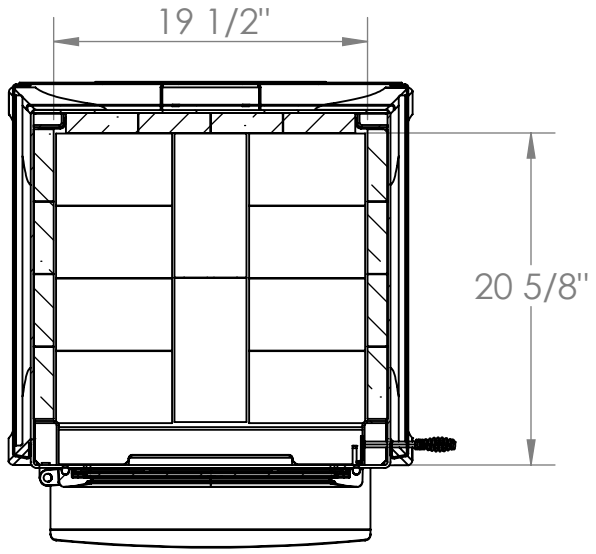

Width: 19 1/2" firebrick sidewall to firebrick sidewall.

Depth: 20 5/8" Inside firebox face to firebrick backwall.

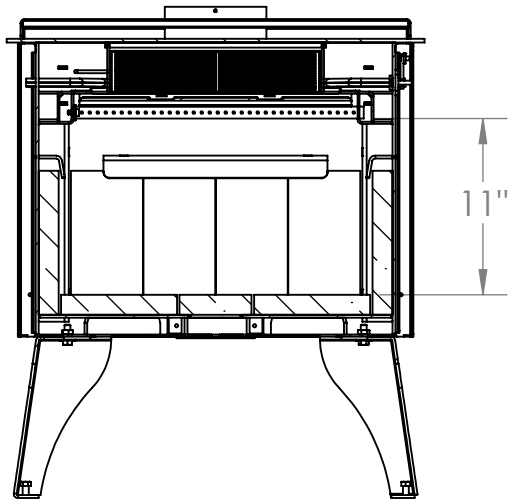

Height: 11" Firebox floor to secondary burn tubes.

Each of the firebox dimensions has been verified.

Width = 19 1/2”, Depth = 20 5/8”, Height = 11.00”

Firebox Volume = 19 1/2”x20 5/8”x11.00” = 4424.06 In^3 = 2.56 ft^3

Appendix B

REVISION HISTORY

Revision History

Date	Project No.	Tech. & Evaluator	Report Sect.	Summary of Changes
05/31/2023	0123WM014E (Edition 000)	Tony Tong Ken Morgan	ALL	First Issue of Report
10/30/23	0123WM014E (Edition 001)	Tony Tong Ken Morgan	Section 3, Page 334 added	Additional calibration information added for equipment number 716 Barometer.
			All	Updated from "*Edition Number 000*" to "*Edition Number 001*"
11/15/2023	0123WM014E (Edition 002)	Ken Morgan	Cover	New revision date and edition number
			Signatories Page 2	Revised due to evaluator participation only on revision
			Test Procedures Page 6	Included EPA Method 28R
11/20/2023	0123WM014E (Edition 003)	Ken Morgan	Cover	New revision date and edition number (ed. 003)
			Table of Contents	Re-numbered due to addition of page 16
			Page 6	Corrected "1.11 g/hr." to "1.09" g/hr."
			Section 3, Tables 1 and 2	Re-defined "Corrected" and "Uncorrected" per EPA request of 11/16/23
			Section 3, Table 1	Added weighted average emissions for both Corrected and Uncorrected values.
			Page 15	Updated Weighted Average Calculations to display 2 decimals and re-labeled as "Uncorrected"
			Page 16	Added "Corrected" Weighted Average calculation