KUMA STOVES

Rathdrum ID, USA

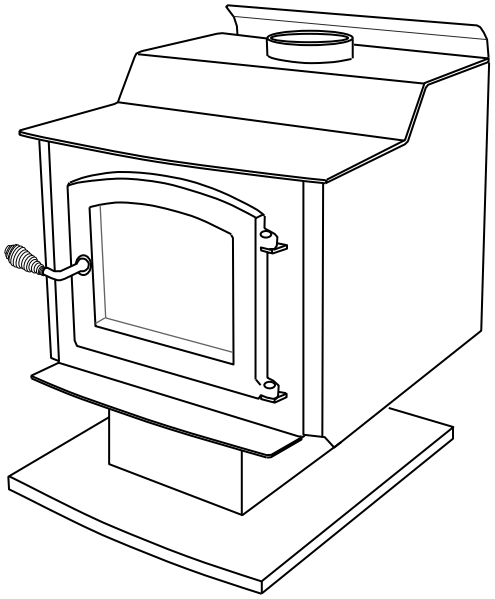

MODEL# K-TAM: Tamarack

Tested to: UL1482

Report #: 123-S-05-4

Testing performed by Omni Test Laboratories

INSTALLATION AND OPERATING INSTRUCTIONS

SAVE THESE INSTRUCTIONS

Rev. 5-7-2015

Welcome to the Kuma family.

Kuma is a modified version of the Greek word Kauma that means "a great heat".

We would like to take the time to say thank you for purchasing a Kuma stove. If this is your first Kuma stove, you have joined a long list of family members, some since 1981. We are a family business that still desires to maintain a good relationship with each and every one of our customers. Our mission is to provide you with a quality product that will last a lifetime. If you ever have a problem with your stove, we will do what is needed to get it resolved and keep you warm.

You may have noticed a portion of the Bible enclosed in your owner's packet. It is a small gift for you. Our faith in Jesus Christ is very important to us and we have that faith because there is hope in heaven. That hope comes from the message of truth that is found in this gospel of John.

Thank you for allowing us the opportunity to warm your house. May God bless you and we anticipate that you will enjoy the use of your new Kuma wood stove.

Sincerely,

The Freeman Family

This manual describes the installation and operation of the Kuma Model **Tamarack** Non-catalytic wood heater. This heater meets the 2015 U.S. Environmental Protection Agency's crib wood emission limits for wood heaters sold after May 15, 2015. Under specific test conditions (Canadian Method B-415) this heater has been shown to deliver heat at rates ranging from 11,700 to 29,800 Btu/hr. and an efficiency of 73.1% (High Heating Value).

Please read the safety precautions and the entire installation and operation instructions carefully. Failure to properly install and maintain your wood stove can result in an unsafe condition.

Contents

Section 1…..……..…….Safety Precautions

Section 2……..…Mobile Home Installation Instructions

Section 3……Residential Installation Instructions

Section 4……Wood Burning Operation Instructions

Section 5……....Maintenance

Section 6…….Installation Clearances and Diagrams

Section 7……..…Troubleshooting

Section 8……...Replacement Parts List

Section 9……..…Warranty

This page intentionally left blank.

This page intentionally left blank.

Section 1 – Safety Precautions

Install and use in accordance with the manufacturers installation and operation instructions contained in this manual only.

1. If this stove is not properly installed, a house fire can occur. For your protection, follow the installation instructions provided. We recommend contacting local building or fire officials regarding restrictions and installation inspection requirements in your area. **We also recommend that your Kuma model Tamarack stove be installed by a properly trained and licensed installer, preferably a NFI (National Fireplace Institute) expert.**
2. **DO NOT CONNECT THIS UNIT TO A CHIMNEY FLUE SERVICING ANOTHER APPLIANCE.**
3. Do not use gasoline, gasoline-type lantern fuel, kerosene, charcoal lighter fluid, or similar liquids to start or "freshen up" a fire in this heater. Keep all such liquids well away from the heater while it is in use.
4. Do not burn garbage.
5. **DO NOT OVERFIRE.** If any part of the stove or chimney glows, the stove is in an over fire condition. If this happens, shut the air control off immediately.
6. **WARNING: DO NOT INSTALL IN A SLEEPING ROOM**
7. **An improperly drafting stove can cause smoke and carbon monoxide to enter the home. Smoke detectors and carbon monoxide monitors are recommended to be installed in the same room as this heater.**
8. **CAUTION:** The structural integrity of the floor, wall and ceiling/roof must be maintained.
9. **DO NOT USE SINGLE WALL PIPE FOR ANY CHIMNEY APPLICATION, EXTERIOR OR THROUGH THE WALL OR CEILING.** Single wall pipe may only be used as a connection between the stove and an approved masonry or stainless steel chimney. **Single wall pipe may not be used as a connector in mobile homes.**
10. When installing into an existing masonry or metal chimney, examine the chimney system carefully. If you have any questions, seek professional advice. We recommend having existing chimneys cleaned and inspected by a qualified professional prior to the installation of your new Stove.
11. **NOTE ALL MINIMUM CLEARANCE REQUIREMENTS TO COMBUSTIBLES.** Installation must comply with minimum clearances as listed in this manual. (see section 6)
12. Do not operate this stove with the door in an open position.
13. **Do not operate this stove with the ash pan open. (pedestal model only.)**
14. This stove must be connected to a minimum 6" diameter listed chimney that complies with U.L. type 103HT factory built chimney or a code approved masonry chimney. If the masonry chimney does not meet code, a U.L. 1777 approved liner must be installed.
15. When connecting single wall or double wall connector pipe to the stove and chimney, use 3 screws per pipe joint including 3 screws securing the pipe to the stove. Depending on the type of double wall pipe you are using, it may also be necessary to fasten it at the chimney. Simpson Duravent's DVL double wall uses a snap lock connector and does not need screws.
16. When connecting this stove to a masonry chimney, make sure you observe all applicable clearances including walls, ceilings and other combustible material. A masonry chimney must be minimum 6" diameter and constructed with a liner according to NFPA code 211. If you have any questions about the condition or the code compliance of your masonry chimney, please speak with a qualified professional.

17. **WHEN PENETRATING A COMBUSTIBLE WALL TO CONNECT TO AN OUTSIDE MASONRY CHIMNEY YOU MUST BE CERTAIN THAT THE WALL PASS THROUGH IS A SAFE AND LISTED METHOD.** Please refer to NFPA code 211 for details about listed wall pass through methods. To obtain a copy of the NFPA code 211, you may visit their website at www.nfpa.org or call them toll free at 1(800)344-3555. Your local building dept. may also have information regarding NFPA code 211.

EXCERPT FROM NFPA 211

FIGURE 6-7.5 Chimney connector systems and clearances from combustible walls for residential heating appliances.

System		Clearance (in.)/(mm)
A	Minimum 3.5 in. (90 mm) thick brick masonry wall framed into combustible wall with a minimum of 12-in. (305-mm) brick separation from clay liner to combustibles. Fireclay liner (ASTM C 315, *Standard Specification for Clay Fire Linings*, or equivalent), minimum 5/8-in. (16-mm) wall thickness, shall run from outer surface of brick wall to, but not beyond, the inner surface of chimney flue liner and shall be firmly cemented in place.	12/305
B	Solid-insulated, listed factory-built chimney length of the same inside diameter as the chimney connector and having 1 in. (25.4 mm) or more of insulation with a minimum 9-in. (229-mm) air space between the outer wall of the chimney length and combustibles. The inner end of the chimney length shall be flush with the inside of the masonry chimney flue and shall be sealed to the flue and to the brick masonry penetration with non-water-soluble refractory cement. Supports shall be securely fastened to wall surfaces on all sides. Fasteners between supports and the chimney length shall not penetrate the chimney liner.	9/229
C	Sheet steel chimney connector, minimum 24 gauge [0.024 in. (0.61 mm)] in thickness, with a ventilated thimble, minimum 24 gauge [0.024 in. (0.61 mm)] in thickness, having two 1-in. (25.4-mm) air channels, separated from combustibles by a minimum of 6 in. (152 mm) of glass fiber insulation. Opening shall be covered, and thimble supported with a sheet steel support, minimum 24 gauge [0.024 in. (0.61 mm)] in thickness. Supports shall be securely fastened to wall surfaces on all sides and shall be sized to fit and hold chimney section. Fasteners used to secure chimney section shall not penetrate chimney flue liner.	6/152
D	Solid-insulated, listed factory-built chimney length with an inside diameter 2 in. (51 mm) larger than the chimney connector and having 1 in. (25 mm) or more of insulation, serving as a pass-through for a single wall sheet steel chimney connector of minimum 24 gauge [0.024 in. (0.61 mm)] thickness, with a minimum 2-in. (51-mm) air space between the outer wall of chimney section and combustibles. Minimum length of chimney section shall be 12 in. (305 mm). Chimney section concentric with and spaced 1 in. (25.4 mm) away from connector by means of sheet steel support plates on both ends of chimney section. Opening shall be covered, and chimney section supported on both sides with sheet steel supports of minimum 24 gauge [0.024 in. (0.61 mm)] thickness. Supports shall be securely fastened to wall surfaces on all sides and shall be sized to fit and hold chimney section. Fasteners used to secure chimney section shall not penetrate chimney flue liner.	2/51

Additional requirements:

1. Insulation material used as part of wall pass-through system shall be of noncombustible material and shall have a thermal conductivity of 1.0 Btu-in./hr-ft^2-°F (4.88 kg-cal/hr-m^2-°C) or less.
2. All clearances and thicknesses are minimums; larger clearances and thicknesses shall be permitted.
3. Any material used to close up an opening for the connector shall be of noncombustible material.
4. A connector to a masonry chimney, except for System B, shall extend in one continuous piece through the wall pass-through system and the chimney wall to the inner face of the flue liner, but not beyond.

Section 2 – Mobile home installation

INSTALL AND USE IN ACCORDANCE WITH THE MANUFACTURER'S INSTALLATION AND OPERATING INSTRUCTIONS ONLY. WHILE MOST ANYONE WITH BASIC CARPENTRY SKILLS CAN SUCCESSFULLY AND SAFELY INSTALL THEIR KUMA WOOD STOVE, IT IS HIGHLY RECOMMENDED THAT IT IS INSTALLED BY A QUALIFIED PROFESSIONAL WHO IS PROPERLY TRAINED AND LICENSED–PREFERABLY AN NFI CERTIFIED (NATIONAL FIREPLACE INSTITUE) EXPERT.

CAUTION: The Structural integrity of the mobile home floor, walls and ceiling/roof must be maintained. Use additional bracing if required. Never cut a load bearing wall or engineered truss, use elbows if necessary to offset the pipe.

CAUTION: NEVER INSTALL A STOVE IN A SLEEPING ROOM.

STEP 1: Collect the proper tools and materials and determine a location for the stove.

Tools:

1. Reciprocating Saw
2. Assorted Screwdrivers
3. Measuring Tape
4. Pencil
5. Plumb Line
6. Electric or Cordless Drill with assorted drill and driver bits
7. Tin shears
8. Utility Knife
9. Pliers
10. Hammer
11. Assorted Wrenches

Materials:

1. 4" Outside air duct with screen. Kuma part# KA OA 1 is available from your dealer. It includes the screened vent, stove adapter, and 4' of flex vent to be used for through the wall applications.
2. Caulking to seal roof flashing and storm collar. High temperature silicone is recommended.
3. Assorted nails and screws.
4. Short pieces of 2x4 or 2x6. Two pieces minimum 24" long.
5. Copper wire, 8 gauge, for grounding. Grounding "clamp" "terminal" or "lug", for attaching ground wire at stove and mobile home frame.

Determining the stove location:

When choosing a stove location, there are a few things that should be considered.

1. Try to choose a location that is centrally located in the house.
2. Try to choose a location that will be easy to access from your wood storage area.
3. Survey the roof area above and around the location of the chimney exit. Be sure there are no dormers, roof valleys or any other roof irregularities that could cause difficulty when trying to set and seal the roof flashing.
4. If possible, survey the attic area above and around the location of the chimney. Be sure there are no major obstructions such as plumbing, heating ducts, electrical wires, phone cables, etc. Also check the crawl space below and around the stove location for the same obstructions.

STEP 2: Installing the chimney.

IMPORTANT: These instructions are a very basic guideline for the steps to installing your chimney. For complete instructions, refer to the installation manual that came with your chimney. Chimney installation instructions are usually located in the box with the chimney cap or chimney support components. If you have any questions about the installation of your chimney, please contact the dealer where you purchased your stove.

CAUTION: Inspect all chimney components for damage. Do not use any damaged chimney components.

1. Familiarize yourself with the clearances of the stove, for the configuration in which you have chosen to install, i.e. corner installation or straight wall installation (see section 6). Notice the clearances listed for the chimney, this will help you determine the location of the hole in the ceiling.
2. Once you've determined the hole location for the chimney, use a sheet rock saw or reciprocating saw to cut the ceiling to the desired hole size. **BE SURE TO CHECK FOR OBSTRUCTIONS BEFORE CUTTING THE HOLE, REFER TO PIPE INSTALLATION INSTRUCTIONS FOR HOLE SIZE.**
3. Use a plumb to transfer the ceiling hole center to the underside of the roof sheeting in the attic. Once you've marked the hole center on the roof sheeting, drill a hole from the inside or poke a screw or nail through the sheeting so you can find that location once you're on the roof.
4. **Always be careful when using a ladder and working on a roof. Have someone hold the ladder for you while you are climbing up and down. Use a positioning belt or harness and safety rope to secure yourself on the roof.** Locate the hole or screw/nail on the roof that you poked through from the attic. Lay the roof flashing down and center over the hole, screw or nail. Using a pencil, trace the inside of the flashing cone onto the roof. Remove the flashing and use a reciprocating saw to cut out the hole. **Cut the hole out about 1" larger than the mark all the way around.**
5. Use the two pieces of 2x4 or 2x6 to brace across the trusses in the attic. Position the bracing in a way that you will be able to attach the chimney support with the proper clearance to the bracing (see chimney installation instructions for proper clearances). Attach the chimney support to the bracing using screws or nails.
6. Using a flat pry bar, gently lift the shingles off the roof from the middle of the hole up. Slide the flashing up under the shingles on the top half of the hole and let the flashing sit on top of the shingles on the bottom half of the hole. Use silicone or roof tar to seal underneath the flashing and use screws or nails to fasten the flashing to the roof. Be sure to apply a small amount of sealer to each screw head.
7. Slide the first section of chimney through the flashing and into the chimney support. Chimney supports vary from one brand of pipe to another, be sure that the first section of pipe is well secured into the chimney support, again, paying close attention to the chimney manufacturers installation instructions.
8. Continue to fasten chimney sections above the first one until the correct height is reached (see pipe installation instructions)
9. Install the chimney cap
10. Install the storm collar above the flashing and use high temp silicone to seal.
11. If necessary, install a roof brace or guy wires to steady the chimney. Bracing is usually required if the chimney extends more than five feet above the roof.

STEP 3: Installing Hearth and outside air.

1. The hearth must be a non-combustible material and must extend beyond the base of the stove 6" to the sides and back and 16" to the front (see section 6).

Outside Air – An outside air supply is required in all manufactured/mobile home installations.

1. **Kuma Stoves does not particularly require that outside air be directly connected to this stove.** However, some state or local building codes may mandate outside air. If your state or local building code requires an outside air supply use part# KA OA 1. If you are unable to supply a direct connection to the stove or if you need additional ventilation due to room air starvation, we suggest the following:
    a. Provide a passive air supply to the home. The air vent should be a minimum of 4" in diameter.
    b. The air supply must be provided to the same room that the stove is installed in.
    c. The air supply should utilize a barometric damper so that air is only supplied to the room if the house pressure becomes negative.

    Visit www.woodheat.org for more information on the use of outside air.

2. **When building a hearth pad on site, be sure to leave an area open for the installation of the outside air vent.** Once the hearth is positioned according to the minimum clearances, locate and mark out for the 4" outside are vent. On a pedestal model stove, this hole may be anywhere under the stove base. On a leg model stove, try and locate the hole to line up with the hole in the bottom of the stove. On a pre-manufactured hearth, use a hole saw or circular saw to cut through just the backing board then use a hammer and firmly hit the tile or stone on the top side. If the backing board was cut to the correct depth, the tile or stone will break out very clean. Also using a hole saw or circular saw cut the hole through the home floor into the crawl space. Be sure to line this hole up with the one in the hearth.
3. If you are installing your outside air vent through the wall, use a 4" hole saw or reciprocating saw to cut the hole through the wall. BE SURE TO CHECK FOR OBSTRUCTIONS IN THE WALL. When using outside air through the wall and a blower, a special adapter is required for pedestal models, please consult your dealer for this adapter.

STEP 4: Setting the stove and connecting to the chimney

1. If your stove is a leg model, attach the legs before setting the stove on the hearth. Once the legs are attached, or if the stove is a pedestal model, set it gently on the hearth using cardboard to protect the hearth.
2. Position the stove on the hearth according to the clearances shown on the diagrams in section 6. Be sure that the stove is at least minimum clearance from all combustible walls and materials. If possible it is advisable to set the stove 1-2 inches further away from the combustibles than required.
3. USING DOUBLE WALL PIPE ONLY, (single wall is not approved for a mobile home) connect the stove to the chimney. If necessary, use elbows to offset the pipe so that the stove can remain at the correct clearance and still connect to the chimney. Secure each pipe joint with three screws, using the screws provided with the pipe.
4. Drill a small hole through the hearth and route the 8 gauge copper wire into the crawl space. Use a grounding "connector" or "lug" to attach the ground wire to the stove and to the frame of the mobile home.
5. When required by local code, you will need to fasten the stove to the floor of the mobile home. To fasten a leg model, simply mark the location of the hole in the bottom of the legs, drill holes and bolt into the bottom of the leg from the crawl space. To fasten a pedestal model, holes will need to be drilled in the pedestal base. Once the holes are drilled in the base, mark the location on the floor and use bolts and nuts or lag screws to fasten.

Your stove is now ready for use. If your stove installation required a permit and requires inspection by the local building dept. please do not forget to call for inspection. It is important that your permit and inspection be finalized, as some insurance companies will require the stove to be inspected. It is also a great idea to give your insurance a call and let them know that you have installed a wood stove.
PLEASE REFER TO SECTION 4-*Wood Burning Operation Instructions* before lighting your first fire.

Section 3 – Residential installation

INSTALL AND USE IN ACCORDANCE WITH THE MANUFACTURER'S INSTALLATION AND OPERATING INSTRUCTIONS ONLY. WHILE MOST ANYONE WITH BASIC CARPENTRY SKILLS CAN SUCCESSFULLY AND SAFELY INSTALL THEIR KUMA WOOD STOVE, IT IS HIGHLY RECOMMENDED THAT IT IS INSTALLED BY A QUALIFIED PROFESSIONAL WHO IS PROPERLY TRAINED AND LICENSED–PREFERABLY AN NFI CERTIFIED (NATIONAL FIREPLACE INSTITUE) EXPERT.

CAUTION: The Structural integrity of the mobile home floor, walls and ceiling/roof must be maintained. Use additional bracing if required. Never cut a load bearing wall or engineered truss, use elbows if necessary to offset the pipe.

CAUTION: NEVER INSTALL A STOVE IN A SLEEPING ROOM.

STEP 1: Collect the proper tools and materials and determine a location for the stove.

Tools:

1. Reciprocating Saw
2. Assorted Screwdrivers
3. Measuring Tape
4. Pencil
5. Plumb Line
6. Electric or Cordless Drill with assorted drill and driver bits
7. Tin shears
8. Utility Knife
9. Pliers
10. Hammer
11. Assorted Wrenches

Materials:

1. 4" Outside air duct with screen. Kuma part# KA OA 1 is available from your dealer, it includes the screened vent, stove adapter, and 4' of flex vent to be used for through the wall applications.
2. Caulking to seal roof flashing and storm collar. High temperature silicone is recommended.
3. Assorted nails and screws.
4. Short pieces of 2x4 or 2x6. Two pieces minimum 24" long.

Determining the stove location:

When choosing a stove location, there are a few things that should be considered.

1. Try to choose a location that is centrally located in the house.
2. Try to choose a location that will be easy to access from your wood storage area.
3. Survey the roof area above and around the location of the chimney exit. Be sure there are no dormers, roof valleys or any other roof irregularities that could cause difficulty when trying to set and seal the roof flashing.
4. If possible, survey the attic area above and around the location of the chimney. Be sure there are no major obstructions such as plumbing, heating ducts, electrical wires, phone cables, etc. Also check the crawl space below and around the stove location for the same obstructions.

STEP 2: Installing the chimney.

IMPORTANT: These instructions are a very basic guideline for the steps to install your chimney. For complete instructions, refer to the installation manual that came with your chimney. Chimney installation instructions are usually located in the box with the chimney cap or chimney support components. DO NOT mix different brands of chimney components. If you have any questions about the installation of your chimney, please contact the dealer where you purchased your stove.

CAUTION: Inspect all chimney components for damage. Do not use any damaged chimney components.

1. Familiarize yourself with the clearances of the stove, for the configuration in which you have chosen to install, i.e. corner installation or straight wall installation **(see section 6).** Notice the clearances listed for the chimney, this will help you determine the location of the hole in the ceiling.
2. Once you've determined the hole location for the chimney, use a sheet rock saw or reciprocating saw to cut the ceiling to the desired hole size. **BE SURE TO CHECK FOR OBSTRUCTIONS BEFORE CUTTING THE HOLE, REFER TO PIPE INSTALLATION INSTRUCTIONS FOR HOLE SIZE.**
3. Use a plumb to transfer the ceiling hole center to the underside of the roof sheeting in the attic. Once you've marked the hole center on the roof sheeting, drill a hole from the inside or poke a screw or nail through the sheeting so you can find that location once you're on the roof.
4. **Always be careful when using a ladder and working on a roof. Have someone hold the ladder for you while you are climbing up and down. Use a positioning belt or harness and safety rope to secure yourself on the roof.** Locate the hole or screw/nail on the roof that you poked through from the attic. Lay the roof flashing down and center over the hole, screw or nail. Using a pencil, trace the inside of the flashing cone onto the roof. Remove the flashing and use a reciprocating saw to cut out the hole. **Cut the hole out about 1" larger than the mark all the way around.**
5. Use the two pieces of 2x4 or 2x6 to brace across the trusses in the attic. Position the bracing in a way that you will be able to attach the chimney support with the proper clearance to the bracing (see chimney installation instructions for proper clearances). Attach the chimney support to the bracing using screws or nails.
6. Using a flat pry bar, gently lift the shingles off the roof from the middle of the hole up. Slide the flashing up under the shingles on the top half of the hole and let the flashing sit on top of the shingles on the bottom half of the hole. Use silicone or roof tar to seal underneath the flashing and use screws or nails to fasten the flashing to the roof. Be sure to apply a small amount of sealer to each screw head.
7. Slide the first section of chimney through the flashing and into the chimney support. Chimney supports vary from one brand of pipe to another, be sure that the first section of pipe is well secured into the chimney support, again, paying close attention to the chimney manufacturers installation instructions.
8. Continue to fasten chimney sections above the first one until the correct height is reached (see pipe installation instructions)
9. Install the chimney cap
10. Install the storm collar above the flashing and use high temp silicone to seal.
11. If necessary, install a roof brace or guy wires to steady the chimney. Bracing is usually required if the chimney extends more than five feet above the roof.

STEP 3: Installing Hearth and outside air.

1. The hearth must be a non-combustible material and must extend beyond the base of the stove 6" to the sides and back and 16" to the front (see section 6).

Outside Air – Outside air is required in all manufactured home installations.

2. **Kuma stoves does not particularly require that outside air be directly connected to this stove,** However, some state or local building codes may mandate outside air. If your state or local building code requires an outside air supply use part# KA OA 1. If you are unable to supply a direct connection to the stove, we suggest the following:
    d. Provide a passive air supply to the home. The air vent should be a minimum of 4" in diameter.
    e. The air supply must be provided to the same room that the stove is installed in.
    f. The air supply should utilize a barometric damper so that air is only supplied to the room if the house pressure becomes negative.

    Visit www.woodheat.org for more information on the use of outside air.

3. **When building a hearth pad on site, be sure to leave an area open for the installation of the outside air vent.** Once the hearth is positioned according to the minimum clearances, locate and mark out for the 4" outside are vent. On a pedestal model stove, this hole may be anywhere under the stove base. On a leg model stove, try and locate the hole to line up with the hole in the bottom of the stove. On a pre-manufactured hearth, use a hole saw or circular saw to cut through just the backing board then use a hammer and firmly hit the tile or stone on the top side. If the backing board was cut to the correct depth, the tile or stone will break out very clean. Also using a hole saw or circular saw cut the hole through the home floor into the crawl space. Be sure to line this hole up with the one in the hearth.
4. If you are installing your outside air vent through the wall, use a 4" hole saw or reciprocating saw to cut the hole through the wall. BE SURE TO CHECK FOR OBSTRUCTIONS IN THE WALL. When using outside air through the wall and a blower, a special adapter is required for pedestal models, please consult your dealer for this adapter.

STEP 4: Assembling the stove and connecting to the chimney

6. Attach the legs or pedestal using the instructions provided in the leg or pedestal box. Set the stove gently on the hearth using cardboard for protection.
7. Position the stove on the hearth according to the clearances shown on the diagrams in section 6. Be sure that the stove is at least minimum clearance from all combustible walls and materials. If possible it is advisable to set the stove 1-2 inches further away from the combustibles than required.
8. USING DOUBLE WALL PIPE ONLY, (single wall is not approved for a mobile home) connect the stove to the chimney. If necessary, use elbows to offset the pipe so that the stove can remain at the correct clearance and still connect to the chimney. Secure each pipe joint with three screws, using the screws provided with the pipe.
9. Drill a small hole through the hearth and route the 8 gauge copper wire into the crawl space. Use a grounding "connector" or "lug" to attach the ground wire to the stove and to the frame of the mobile home.
10. When required by local code, you will need to fasten the stove to the floor of the mobile home. To fasten a leg model, simply mark the location of the hole in the bottom of the legs, drill holes and bolt into the bottom of the leg from the crawl space. To fasten a pedestal model, holes will need to be drilled in the pedestal base. Once the holes are drilled in the base, mark the location on the floor and use bolts and nuts or lag screws to fasten.

If your stove installation required a permit and requires inspection by the local building dept. please do not forget to call for inspection. It is important that your permit and inspection be finalized, as some insurance companies will require the stove to be inspected. It is also a great idea to give your insurance a call and let them know that you have installed a wood stove.

PLEASE REFER TO SECTION 4- *Wood Burning Operation Instructions* before lighting your first fire.

Section 4 – Wood burning operation instructions

IMPORTANT:
Your new KUMA wood stove is shipped with a baffle packing to eliminate damage in shipping. Once the stove is set in place and ready to use you will need to remove the baffle restraints. To remove the baffle restraints, cut the ties in front of the nylon buckle and pull forward on the bottom cable until it pulls out. Remove the two cardboard pieces from on top of the baffle and discard. Be careful not to dislodge or damage the ceramic wool blanket on top of the bricks. Your stove is now ready for operation.

CAUTION:
When building the first couple of fires, be careful to build the fire small and increase the heat slowly over a 4-5 hour period. The paint on the stove "cures" with heat and needs to be done slowly. As the paint "cures" it gives off a smell and even sometimes a visible "smoky" haze into the room. Make sure the area is well ventilated during the curing operation. The smell will disappear after a few hours of operation.

A word about draft.
Draft is the force which moves air from the appliance up through the chimney. The amount of draft in your chimney depends on the length of the chimney, local geography, nearby obstructions and other factors. Too much draft may cause excessive temperatures in the appliance and may damage the internal components of the stove. Inadequate draft may cause back puffing into the room and 'plugging' of the chimney. Inadequate draft will cause the appliance to leak smoke into the room through appliance and chimney connector joints. An uncontrollable burn or excessive temperature indicates excessive draft.

Recommendations on building and maintaining a fire.
Start by opening the air control on the stove to fully open. Fully open, depending on the model, will be pulled all the way out to the left, pulled all the way forward, or in the case of the largest stove, the two vents near the bottom will be pushed towards the center.
NEVER USE FLAMIBLE LIQUIDS TO START OR FRESHEN UP A FIRE.
Using a good fire starter can make lighting a fire easier. There are several different types of fire starter available in "chips" "nuggets" and gels. Newspaper also makes a good fire starter if it is torn into strips. When building a fire, use plenty of fire starter on the bottom and use small kindling directly on top of that. Use progressively larger pieces as you stack wood all the way to the top of the firebox. When starting a fire you should never use unsplit pieces of wood unless they are small such as twigs and branches.
Once the wood is stacked in the firebox, you may light the fire starter and leave the door slightly cracked open for a few minutes to aid in the startup of your stove. Once the fire is well lit, shut the door, but leave the air control in the open position for about 20-30 minutes. After burning for about a half an hour in the open position, you can start to regulate the heat output and burn rate by shutting the air control down. When operating you stove, periodically check for visible emissions coming from the chimney and adjust the burn rate and fuel load to reduce emissions. Remember to let your stove burn open for 20-30 minutes each time you reload it with wood. Shutting the air control prematurely can cause excessive creosote in the chimney. **This wood heater has a manufacturer-set minimum low burn rate that must not be altered. It is against federal regulations to alter this setting or otherwise operate this wood heater in a manner inconsistent with operating instructions in this manual.** Use the following as a general guideline for desired burn rates.

Low burn	Draft handle pushed in to stop.
Med-Low burn	Draft handle pulled out approximately 3/8 inch from stop.
Med-High burn	Draft handle pulled out approximately 7/8 inch from stop.
High burn	Draft handle pulled out completely.

Additional instructions and information.

1. Build your fires directly on the firebrick. Using a grate will allow too much air to the coal bed and will result in incomplete combustion of the wood. Using a grate can also leave charred pieces of wood after the fire has gone out
2. Use only the best grade of dry wood available. Wood should be seasoned for 1 full year prior to being used. Split wood will season much faster and better that wood left in the rounds. Burning green or wet wood greatly increases the chance of creosote buildup and produces significantly less heat. **The number 1 cause for creosote buildup is moisture in the wood.** Store your wood in a dry location. Any wood stored near the stove needs to maintain proper clearance from the stove.
3. This heater is designed to burn natural wood only. Higher efficiencies and lower emissions generally result when burning air dried seasoned hardwoods, as compared to softwoods or to green or freshly cut hardwoods. DO NOT BURN:
    a. Garbage;
    b. Lawn clippings or yard waste;
    c. Materials containing rubber, including tires;
    d. Materials containing plastic;
    e. Waste petroleum products, paints or paint thinners, or asphalt products;
    f. Materials containing asbestos;
    g. Construction or demolition debris;
    h. Railroad ties or pressure-treated wood;
    i. Manure or animal remains;
    j. Salt water driftwood or other previously salt water saturated materials;
    k. Unseasoned wood; or
    l. Paper products, cardboard, plywood, or particleboard.

    The prohibition against burning these materials does not prohibit the use of fire starters made from paper, cardboard, saw dust, wax and similar substances for the purpose of starting a fire in an affected wood heater. Burning these materials may result in release of toxic fumes or render the heater ineffective and cause smoke.
4. Small hot fires produce less creosote than long, low smoldering fires. When you start your stove or are re-kindling (reloading) your wood stove with a full or sizeable load of wood, open the draft fully and burn the stove at full burn for 20-30 minutes to heat up the chimney and secondary burn system. This ensures that when the draft control is pushed back for a lower, longer burn, the stove will burn cleaner. You should notice more upper firebox flame activity. This is smoke from the wood mixing with pre-heated air and burning. This is called secondary burn and results in higher stove temperature at lower burn rates and less soot and creosote build-up. Just after starting the fire, some smoke may occur until the chimney warms up to produce some draft. During normal operation, adjust the draft to the position required. If properly set, it will assure longest burn times and the most even heat cycle. Larger loads of wood will create the longest burn times.

Optional blower operation instructions

To install the blower, follow the instructions packaged with the blower. Plug the blower into the nearest 115V grounded circuit. Turn the variable speed knob to 'click' onto high speed. As the knob is turned clock-wise, the blower speed decreases to your desired speed. The blower speed should match the desired burn rate on your stove: i.e. low-burn rate...low blower speed; high-burn rate… high blower speed and so forth.

Ash Pan Operating Instructions:

Safety Precautions

1. Do not operate your wood stove with the ash pan open or removed.
2. Empty the ash pan when the fire is at its lowest point or out.
3. NEVER empty ashes into a combustible container (paper bag, plastic bucket, etc.)
4. NEVER leave ashes in the house or garage. Ashes that seem to be

Cool, may not be.

5. Check gasket on ash pan periodically to ensure a good seal.

Operation

1. Wait until the fire is at its lowest point or out.
2. Remove the ash pan by turning the handle and pulling out.
3. Take the ash pan outside and dump the ashes into a metal or other non-combustible container.
4. Before replacing the ash pan, check to see if any ashes need to be removed from the ash pan plenum. If any significant amount of ashes remain in the ash plenum, it will prevent the ash pan from sliding all the way in and it may not seal, resulting in air entering the ash grate which will produce a runaway fire.
5. Replace the ash pan by inserting it back into the stove, pushing in on the handle while in the horizontal position, and turning to the straight up and down position (spring pointed down).

Section 5 – Maintenance

Use the table below as a general maintenance schedule for your stove. See below the table for detailed information on performing the maintenance.

Ash disposal	Every 1-2 weeks
Chimney inspection and cleaning	Every 2-3 months
Gasket replacement	Every year or as needed
Glass cleaning and replacement	As needed
Brick replacement	Replace broken bricks as needed
Clean and inspect stove	Every year
Replace ceramic insulation	Every year or as needed

Ash disposal – Every 1-2 weeks

1. Empty the ash pan when the fire is out. Never try to empty the ash pan when the stove has an active or full fire, doing so will over heat the stove.
2. Using gloves, remove the ash pan by turning the handle to one side or the other and pulling straight out.
3. Dump the ashes into a non-combustible container away from the house. **NEVER EMPTY ASHES INTO A COMBUSTIBLE CONTAINER SUCH AS A PLASTIC BUCKET OR PAPER BAG. NEVER LEAVE ASHES IN THE HOUSE OR GARAGE.**
4. Before replacing the ash pan, check to see if any ashes need to be removed from the ash pan plenum. If any ashes remain in the ash plenum it will prevent the ash pan from sliding all the way in and it may not seal, resulting in air entering the ash grate which will produce a runaway fire.
5. Replace the ash pan by inserting it back into the stove, pushing in on the handle while in a horizontal position, and turning the handle vertically (spring towards the bottom).

Chimney inspection and cleaning – Every 2-3 months

1. Refer to the chimney manufacturers installation instructions for additional information on cleaning the chimney. We recommend having the chimney cleaned by a licensed professional chimney sweep.
2. When wood is burned, it releases tar and other organic vapors. When these vapors combine with moisture, creosote is formed and enters the chimney. When the stove is burning on a low setting, the exhaust can be moving slow and the chimney can be relatively cool. This combination of slow exhaust and a cool chimney causes creosote to stick to the walls of the chimney. When creosote accumulates, it causes the draft to slow and the problem of creosote accumulation will compound. If the creosote is not removed on a regular basis, a chimney fire can occur which can damage the chimney and/or stove. Therefore, the importance of regular chimney maintenance cannot be emphasized enough.

Gasket Replacement – Every year or as needed

1. Gaskets need to be checked at least once a year. The gaskets on your stove are designed to keep unwanted air out of the firebox. Neglecting these gaskets can cause a decrease in burn times, more wood consumption and possible over heating of the stove. When checking the gaskets, look for wear areas that show fraying or cutting. Check the gasket for softness by pressing them with your finger and give a slight tug on one area to see if the glue is still holding. Gaskets that are cut or fraying can cause small air leaks in that spot. Gaskets that are hard will not conform to the stove and may leak air. Gaskets that are not held in with glue could come out at an inconvenient time. The gaskets that need to be checked are: Door gasket, ash pan gasket, and glass gasket. Refer to section 8 for part numbers for the correct gasket for your stove and check with your dealer for parts availability.

Glass cleaning and replacement – as needed

1. Never clean the glass when it is hot.
2. Clean the glass with an approved stove glass cleaner, never use an abrasive material like sandpaper or steel wool
3. Your stove is equipped with an air wash system that will self-clean the glass. If the glass is black or covered with soot from slow burning, simply load the stove with good, dry, split wood and burn at high burn for about 20- 30 minutes and the glass should burn clean.
4. Never build a fire against the glass.
5. When closing the door be sure that no pieces of wood are protruding from the door opening that could touch the glass. Excessive stress like closing the door on a piece of wood will break the glass. If the glass ever breaks in your stove, don't panic, simply shut the air off and let the fire burn out. Do not continue to operate a stove with broken glass. Do not leave the stove unattended with broken glass.
6. To replace the glass it may be helpful to remove the door from the stove and place on a clean soft work area. Remove the retaining ring screws and retaining ring, remove the glass and dispose of properly, CAUTION: BROKEN GLASS WILL BE SHARP. Clean the door thoroughly where the new piece of glass will install. Set the new piece of glass into the door and replace the retaining ring and screws. Be careful to tighten the screws evenly, uneven pressure can break the glass. Tighten the screws just enough to hold the glass firmly, over tightening can cause uneven pressure and can break the glass.

Brick replacement – As needed

1. Bricks should be inspected and replaced if necessary at least once a year. Cracked bricks are fine as long as they remain in place. Some of the bricks inside your stove are interchangeable, so shuffling bricks around can be done, for example, a baffle brick that is broken and will not stay in place can be swapped with a brick on the firebox bottom.

Clean and inspect stove – Every year

1. Your stove should be fully cleaned and inspected once a year. This is a great time to inspect the bricks, gaskets, ceramic blanket and the rest of the stove for signs of abnormal wear. Start by shoveling all the ashes out of the stove and emptying the ash pan. Use a shop vac to clean the hard to reach places. Look at the inside of the stove for signs of wear, paying close attention to the stainless steel baffle brick holders and burn tubes. Discoloration of the stainless steel is normal as is slight sagging. If either of the brick holders is failing to keep the bricks in place then it should be replaced.

Replace ceramic insulation – Every year or as needed

1. At least once a year, check the ceramic insulation on top of the baffle in your stove. The ceramic insulation is designed to keep heat in the stove and increase efficiency. As long as the insulation is in place it can be left alone. If the insulation becomes torn during cleaning, simply lay it back together tightly in that area. If the insulation tears to multiple pieces, it should be replaced, smaller pieces can become caught in the draft and cause a restriction.

Firebox Maintenance Diagram

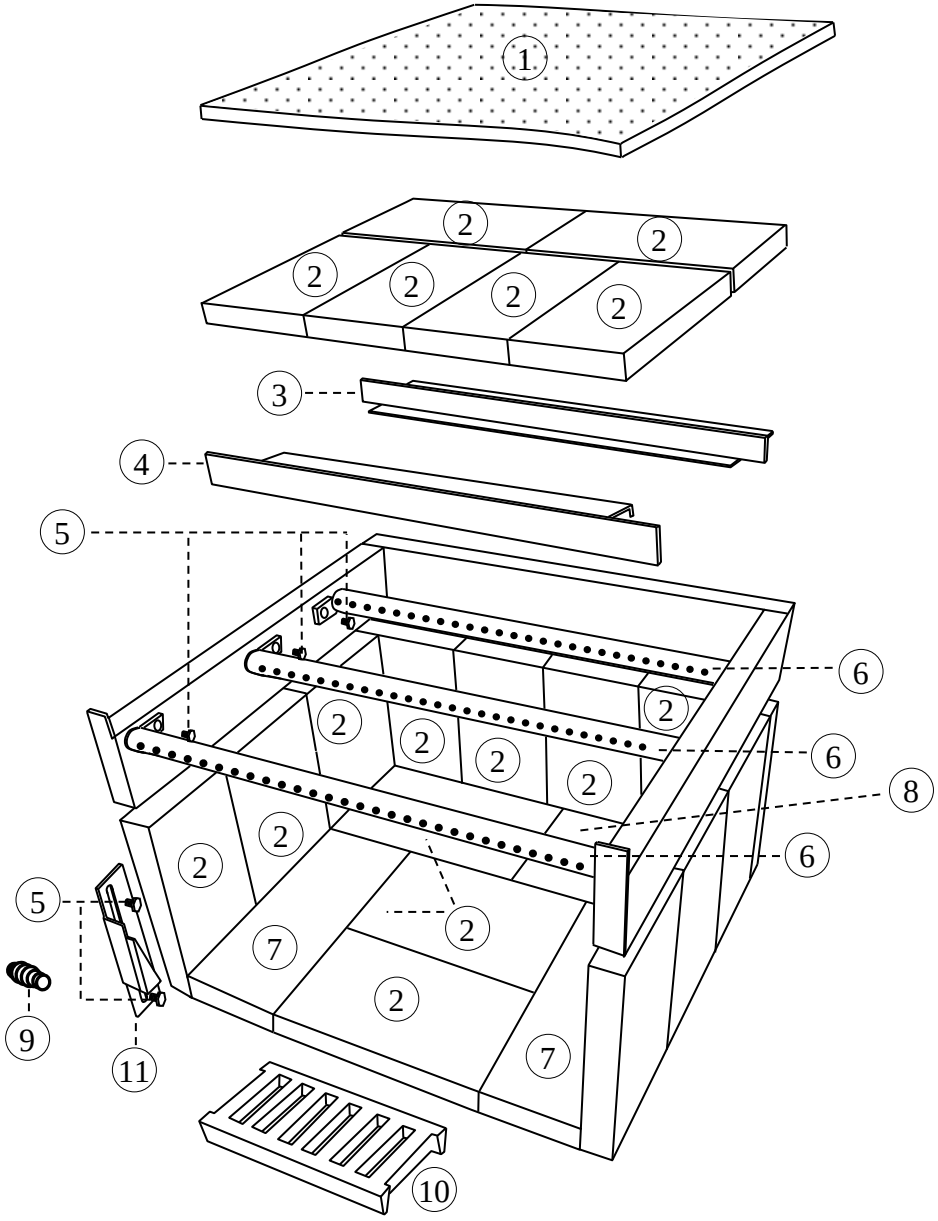

ID#	Description	Part Number	ID#	Description	Part Number
1	Ceramic baffle insulation	KR IN TM	7	Brick cut size: 9” x 3-3/4	KR BR TM2
2	Brick: Standard size	KR BR	8	Brick cut size: 7-5/8” x 4-1/2”	KR BR TM1
3	Rear baffle brick holder	KR BF TMT	9	Door wedge assembly	KR DW TM
4	Front baffle brick holder	KR BF TMZ	10	Ash grate	KR AG
5	Hardware: 1/4-20 x 1/2” bolt. Pack of 6	KR HW 1	11	Control spring, pewter	KR SP 1P
6	Burn tube	KR BT TM	11	Control spring, gold	KR SP 1G

DOOR ASSEMBLY

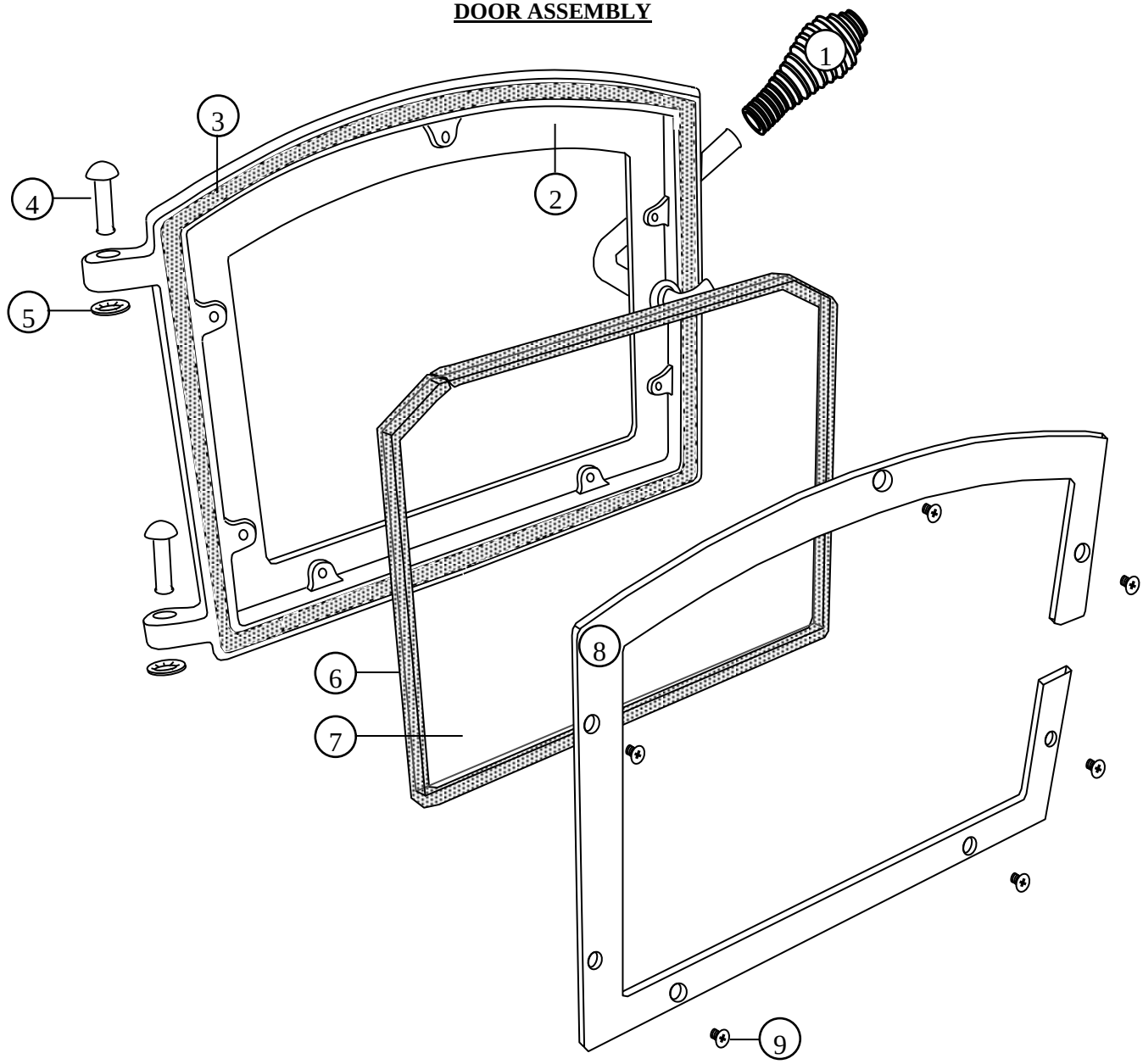

ID#	Description	Part Number	ID#	Description	Part Number
1	Door spring, pewter	KR SP 2P	4	Door pin w/retainer (2ea.)	KR DP 2
1	Door spring, gold	KR SP 2G	5	Door pin retainer (2 ea.)	KR DP 2RT
2	Door casting: Black	KR DR 1B	6	Glass gasket	KR GK 34
2	Door casting: Pewter	KR DR 1P	7	Glass (includes gasket)	KR GL 1
2	Door casting: Gold	KR DR 1G	8	Glass retainer (includes screws)	KR GL 1RT
3	Door gasket kit	KR GK 58	9	Glass retainer screw. Pack of 7	KR HW 4

Section 6 – Clearances and diagrams

Figure #1 Double Wall Pipe
Use this diagram for the following installations:

1. Mobile Home installation with the stove in a corner using double wall pipe.
2. Residential installation with the stove in a corner using double wall pipe. For single wall pipe, refer to figure 2.

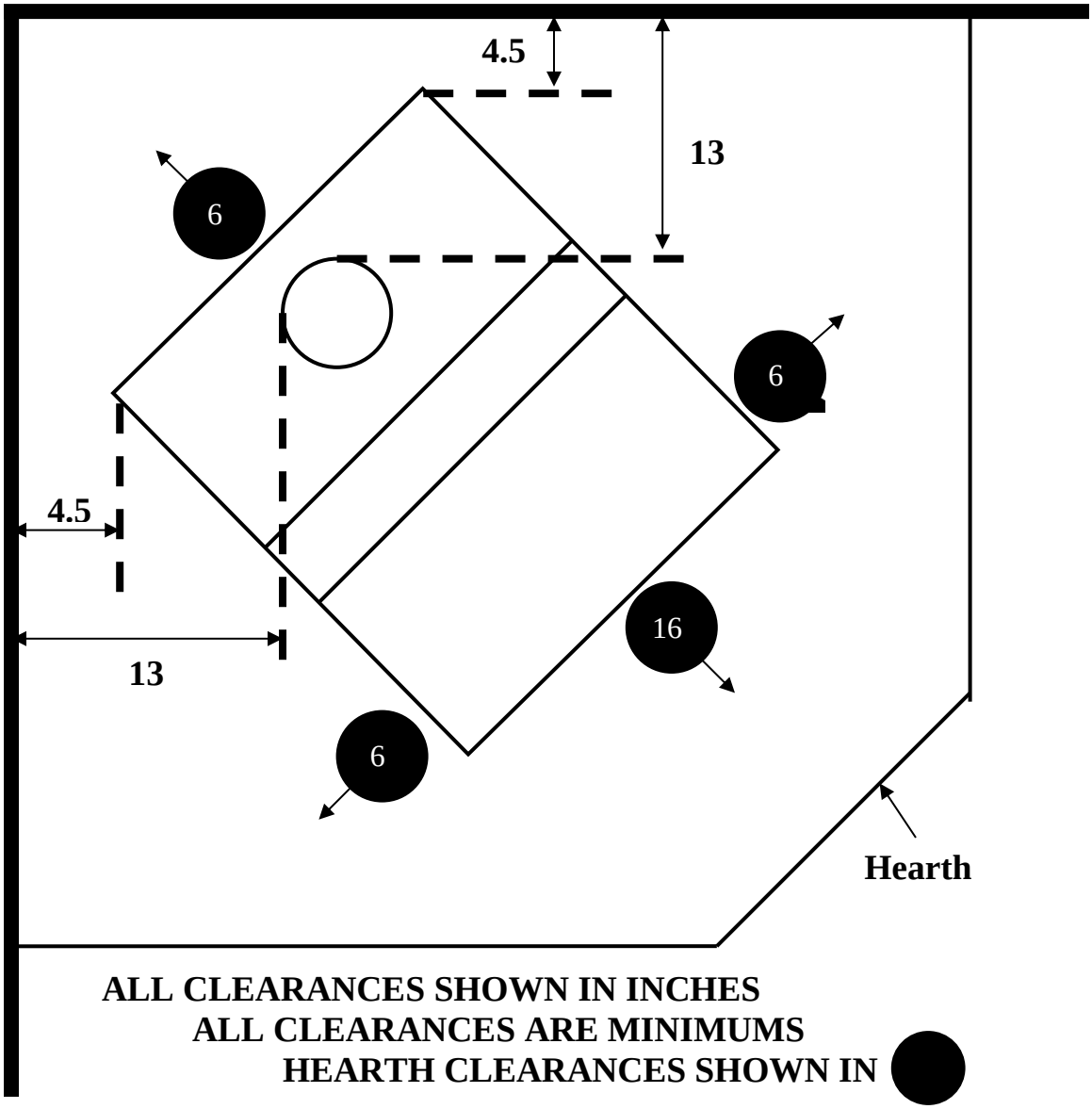

Figure #2 Single Wall Pipe
Use this diagram for the following installation:

1. Residential installation with the stove in a corner using single wall pipe. For double wall pipe, refer to figure 1. For mobile home installation in a corner, refer to figure 1

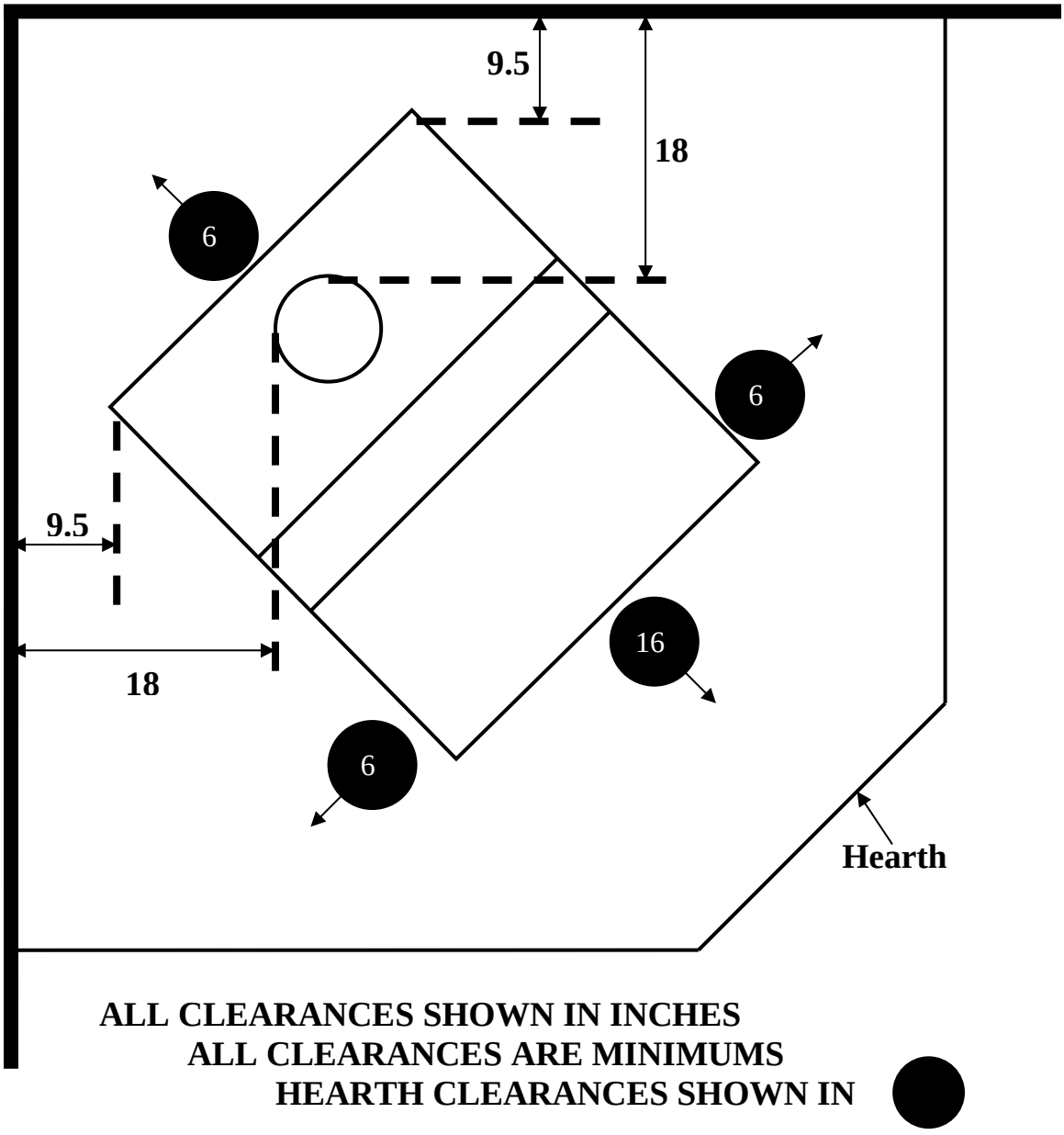

ALL CLEARANCES SHOWN IN INCHES
ALL CLEARANCES ARE MINIMUMS
HEARTH CLEARANCES SHOWN IN

Figure #3 Double Wall Pipe

Use this diagram for the following installations:

1. Mobile home installation with the stove on a straight wall using double wall pipe.
2. Residential installation with the stove on a straight wall using double wall pipe. For single wall pipe, refer to figure 4.

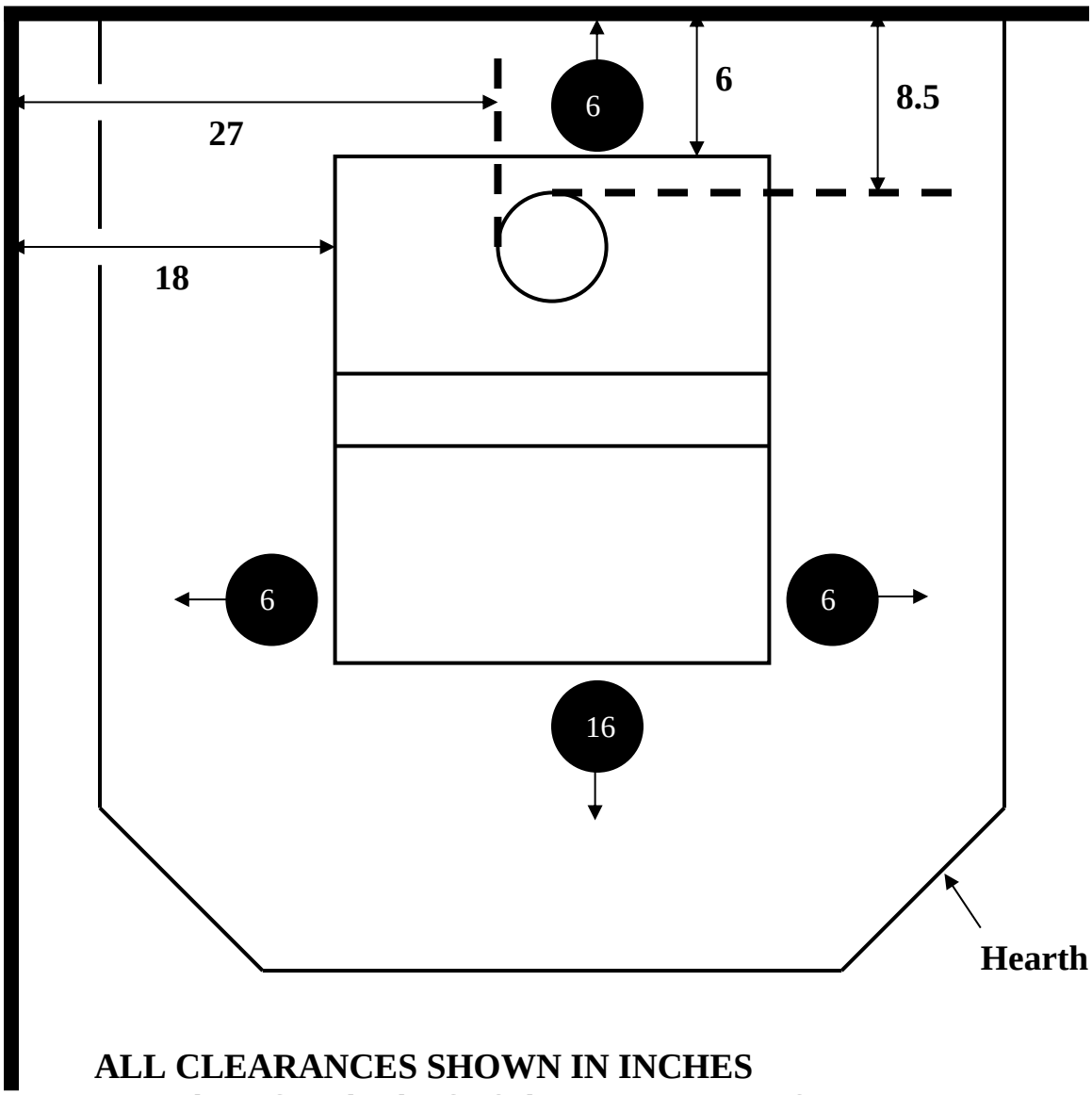

ALL CLEARANCES SHOWN IN INCHES
ALL CLEARANCES ARE MINUMUMS
HEARTH CLEARANCES SHOWN IN

Figure #4 Single Wall Pipe
Use this diagram for the following installations:

1. Residential installation with the stove on a straight wall using single wall pipe. For double wall pipe, refer to figure 3. For mobile home installation on a straight wall, refer to figure 3.

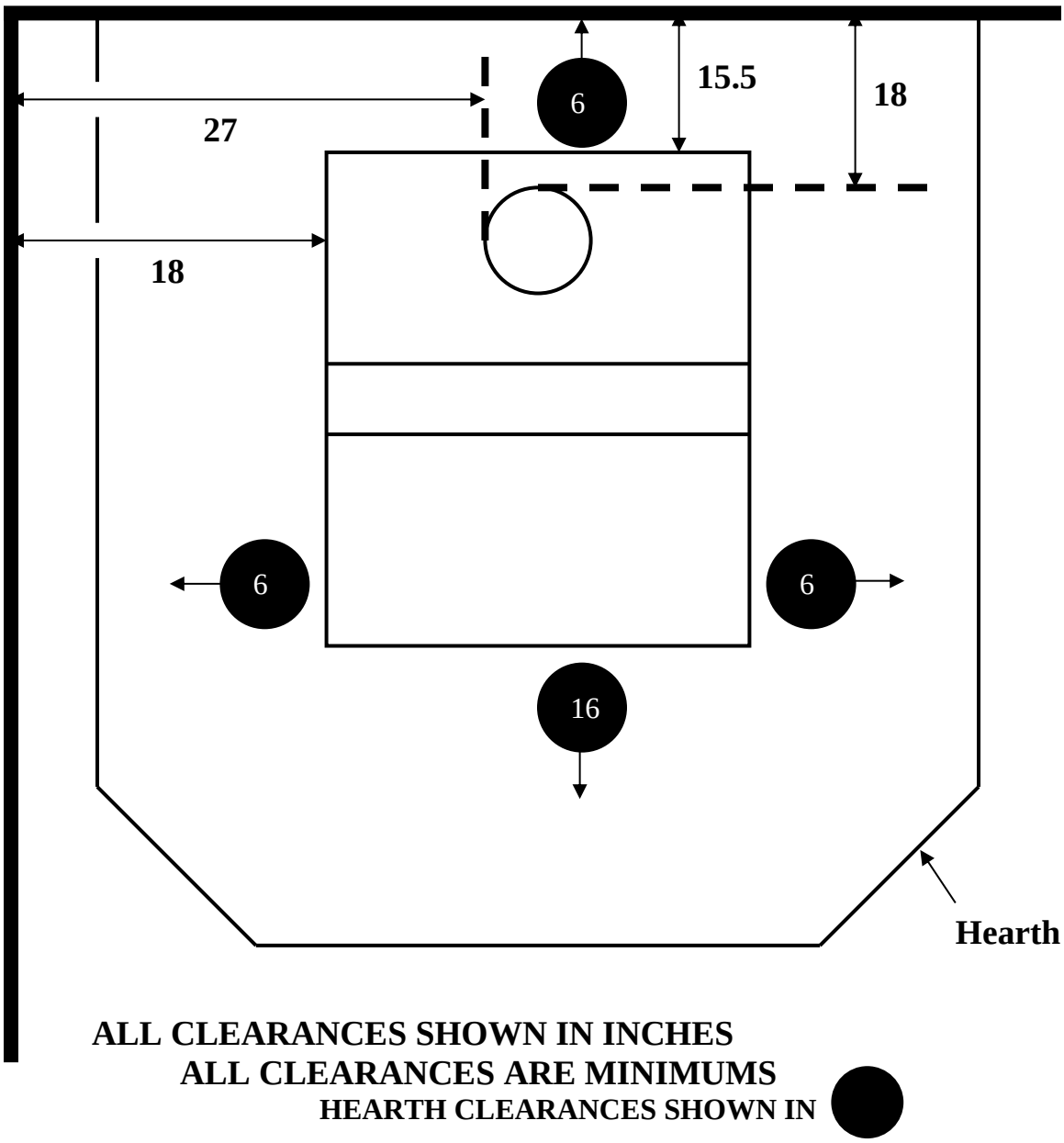

ALL CLEARANCES SHOWN IN INCHES
ALL CLEARANCES ARE MINIMUMS
HEARTH CLEARANCES SHOWN IN

Tamarack installation diagram for manufactured chimneys.

NEVER INSTALL A WOOD STOVE IN A SLEEPING ROOM

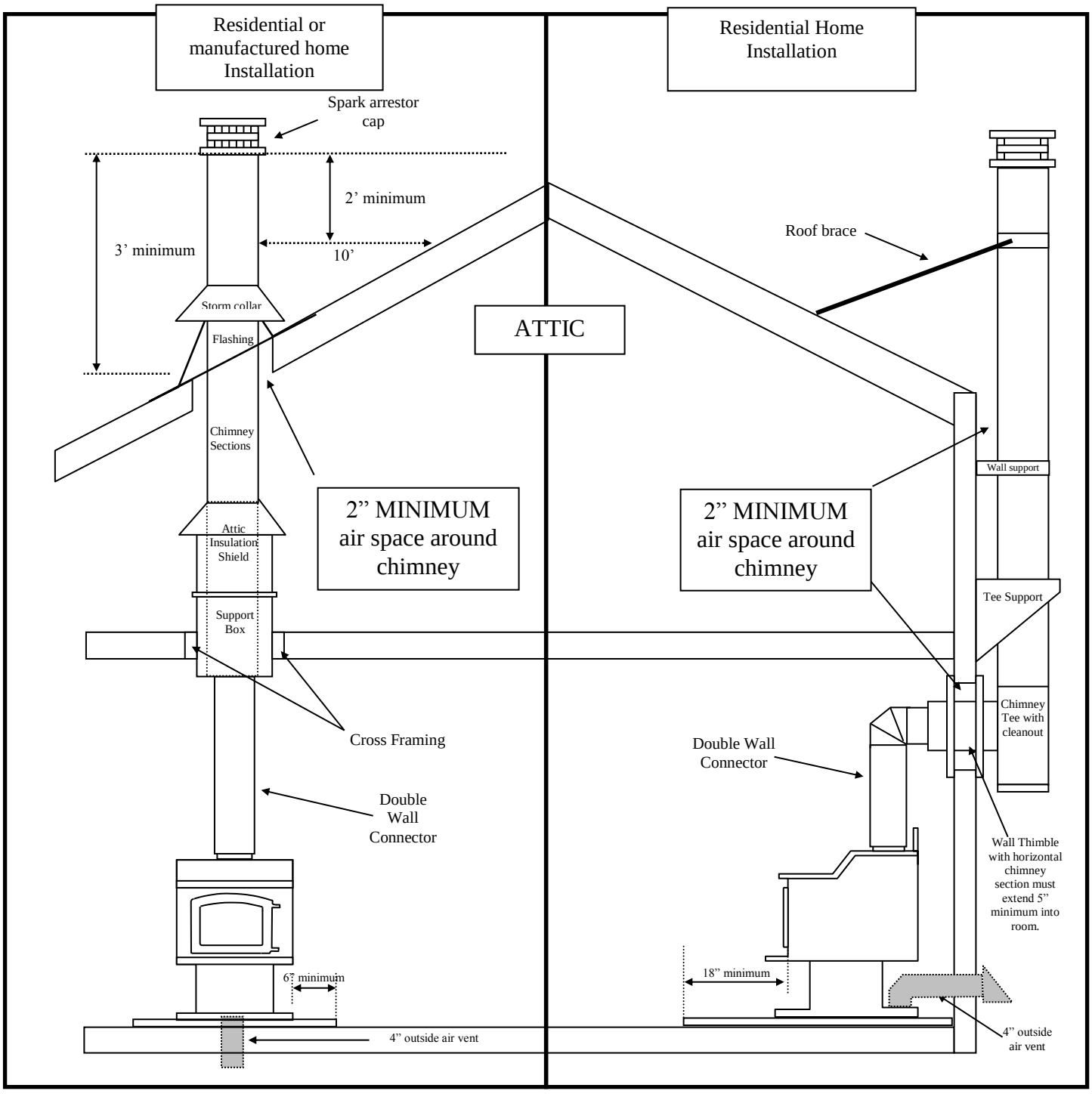

These diagrams are for manufactured chimneys. For Brick Chimneys a safety listed thimble must be used when a connection is made through a combustible wall to a lined masonry chimney. This stove may be connected to a lined masonry chimney or a listed factory built chimney designed for use with solid fuels and conforming to, Canadian ULC629 or USA UL-103HT. Clearances to combustibles must be maintained per manufacturer's instructions on chimney pipe, and stove pipe connectors. Use only double-wall connector in mobile homes

Dimensional Drawings for the Tamarack

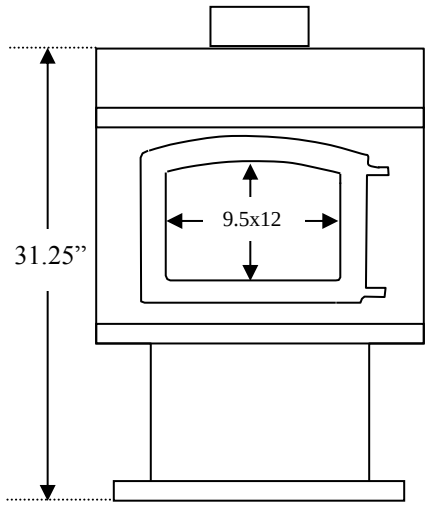

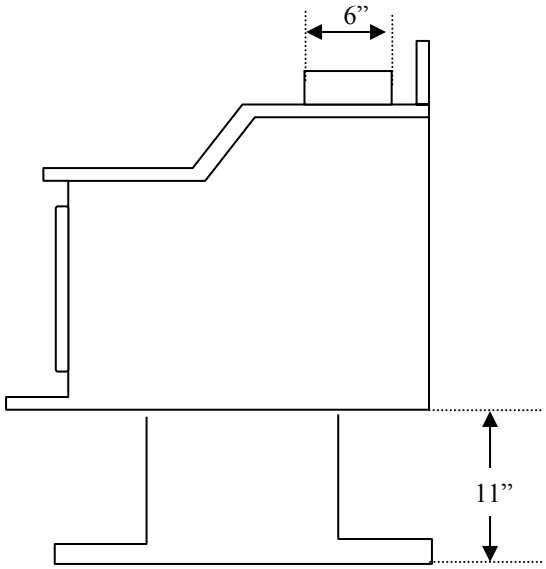

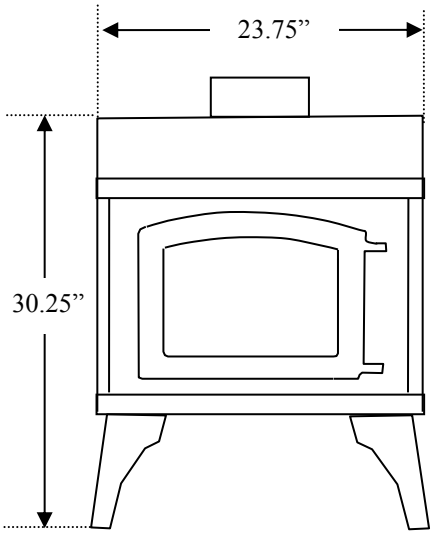

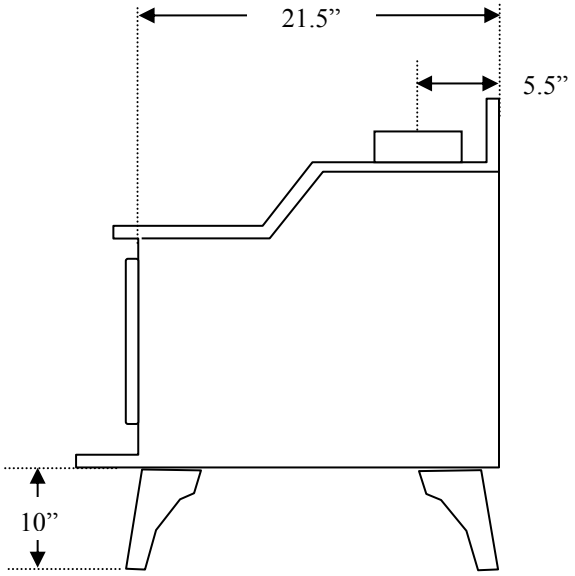

Section 7 – Trouble Shooting

1. Stove burns lazy at start up.
2. Stove back-puffs or smokes into the room at start up.
3. Stove smokes out the door when it is open.
4. Stove won't shut down.
5. Stove won't burn hot enough. Lazy burn.
6. Burn time too short.

Stove burns lazy at start up.

1. The chimney is still cool, allow more time to warm up.
2. Wood is not seasoned (still green). Wood should sit for about 1 year, split and loosely stacked if it was cut green.
3. Wood is well seasoned but has a lot of surface moisture. Your wood supply must be covered. Check your tarps or other covering to see that no rain or snow is getting to your wood. Wood should be covered on top, but open on the sides to allow air movement to aid in drying.
4. Check the air supply to the stove. If you have installed outside air, check the ducts for blockage. If you are not using outside air, be sure you have removed the cover plate on the back of the pedestal. (pedestal models only)

Stove back-puffs or smokes into the room at start up.

1. Chimney is cold. Cold chimneys can produce a "reverse draft" where cold air is rushing down the chimney into the stove. Open a door or a window for about 5 minutes to equalize pressure in the house then try restarting with small strips of newspaper. Using small strips of newspaper or an approved fast burning fire starter and small pieces of kindling will create heat faster to help reverse the cold air.
2. Chimney and/or the chimney cap needs to be cleaned. Your chimney should be checked and cleaned if necessary every few months. Even a small amount of buildup can cause a draft restriction, for example: ¼ inch of buildup on the side wall of a 6" chimney reduces the effective area of the chimney by about 20%. Pay close attention to the chimney cap, especially if it has a screen. Screened chimney caps can become blocked enough to restrict flow in just a few weeks.

Stove smokes out the door when it is open.

1. The door was opened too quickly. Crack the door open just a small amount and let the stove "breathe" a few seconds before opening all the way.
2. Chimney and/or the chimney cap needs to be cleaned. Your chimney should be checked and cleaned if necessary every few months. Even a small amount of buildup can cause a draft restriction, for example: ¼ inch of buildup on the side wall of a 6" chimney reduces the effective area of the chimney by about 20%. Pay close attention to the chimney cap, especially if it has a screen. Screened chimney caps can become blocked enough to restrict flow in just a few weeks.

Stove won't shut down.

1. The ash pan may not be sealing correctly. Check the ash pan gasket for tearing or fraying. See the ash pan instructions in section 5. Even a small amount of undesired air can keep the stove from shutting down.
2. Check the main door gasket and glass gasket for proper seal. See for instructions on checking your gaskets.

Stove won't burn hot enough. Lazy burn.

1. Wood is not seasoned (still green). Wood should sit for about 1 year, split and loosely stacked if it was cut green.
2. Wood is well seasoned but has a lot of surface moisture. Your wood supply must be covered. Check your tarps or other covering to see that no rain or snow is getting to your wood. Wood should be covered on top, but open on the sides to allow air movement to aid in the drying.
3. Chimney and/or the chimney cap needs to be cleaned. Your chimney should be checked and cleaned if necessary every few months. Even a small amount of buildup can cause a draft restriction, for example: ¼ inch of buildup on the side wall of a 6" chimney reduces the effective area of the chimney by about 20%. Pay close attention to the chimney cap, especially if it has a screen. Screened chimney caps can become blocked enough to restrict flow in just a few weeks.
4. Check the air supply to the stove. If you have installed outside air, check the ducts for blockage. If you are not using outside air, be sure you have removed the cover plate on the back of the pedestal. (pedestal models only)

5. Atmospheric conditions. Occasionally, barometric episodes occur that affect draft, thereby affecting stove performance. If your stove has been working fine and performance drops suddenly, this is most likely the cause, and will usually go away within a few days.
6. Your fuel load may be too small or the wood size too large for the coal bed. A small bed of coals requires re-kindling to build up the heat, only put large chunks of wood on a very hot and active bed of coals.

Burn time too short.

1. Your fuel load may be too small or the wood size too large for the coal bed. A small bed of coals requires re-kindling to build up the heat, only put large chunks of wood on a very hot and active bed of coals. If there are large chunks of charred wood left after the fire has gone out, the coal bed was not hot enough.
2. Fuel quality. Harder, denser woods produce longer burn times. Likewise, softer woods produce shorter burn times.
3. The ash pan may not be sealing correctly. Check the ash pan gasket for tearing or fraying. See the ash pan instructions in section 5. Even a small amount of undesired air can keep the stove from shutting down.
4. Check the main door gasket and glass gasket for proper seal. See section 5 for instructions on checking your gaskets.

Section 8 – Accessories and Parts

Stove Body

Item #	Description
KR IN TM	Ceramic baffle insulation. Tamarack.
KR BF TMT	Baffle brick support, rear. Tamarack.
KR BF TMZ	Baffle brick support, front. Tamarack.
KT BT TM	Baffle burn tube, Tamarack.
KR DW TM	Door wedge assembly. Tamarack.
KR AG	Ash grate. ASH / TAM / WCL.
KR SP 1P	Control handle, pewter.
KR SP 1G	Control handle, gold.
KR BR	Brick, standard size. 9" x 4-1/2".
KR BR TM1	Brick, cut size. 7-5/8 x 4-1/2. Tamarack.
KR BR TM2	Brick, cut size. 9 x 3-3/4. Tamarack.
KR HW 1	Hardware pack. 1/4"-20 x 1/2" bolt. Pack of 6.

Door Assembly

Item #	Description
KR GL 1	Door glass, includes gasket. ASP / TAM / WCL.
KR GK 58	5/8" Rope gasket. Price per foot.
KR GK 34	3/4" flat adhesive backed gasket. Price per foot.
KR DP 2	Door hinge pin set, includes pin retainers. ASP / TAM / WCL.
KR DP 2RT	Door pin retainer. ASP / TAM / WCL.
KR SP 2P	Door handle, pewter.
KR SP 2G	Door handle, gold.
KR GL 1RT	Glass retainer. ASP / TAM / WCL.
KR DR 1B	Door casting, black. ASP / TAM / WCL.
KR DR 1P	Door casting, pewter. ASP / TAM / WCL.
KR DR 1G	Door casting, gold. ASP / TAM / WCL.
KR HW 4	Hardware pack. #10 screws. Pack of 7.

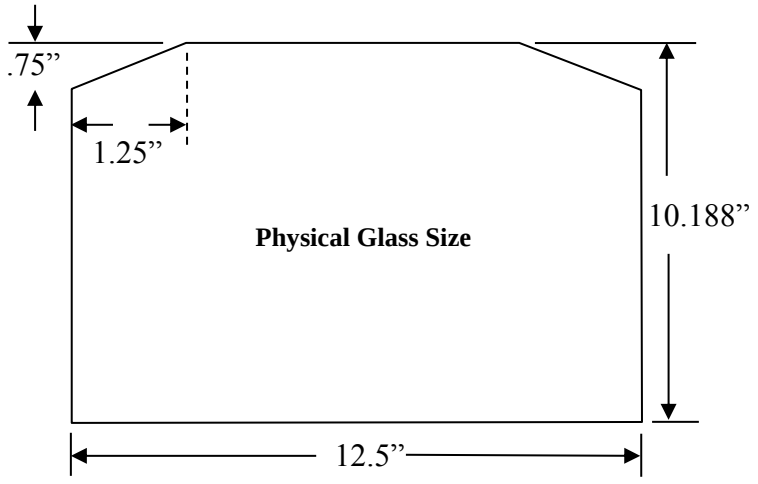

Section 9 – The Kuma "It's Covered" Limited Warranty

Our Promise:
If anything goes wrong with your stove in the first three years, we will supply you with the parts to fix it. For as long as you own your stove, if you ever have a defect in the material or workmanship of your stove's firebox, we will repair or replace it for you. See full details below:

Items Covered	Parts Coverage Period	Labor Coverage Period
Maintenance Items: Bricks, gasket, ceramic insulation, baffle boards and paint.	3 Years	No Labor Coverage
Glass (thermal breakage), blowers, ash grate, brick supports, all hardware and trim.	5 Years	3 Years
Stove firebox, ash pan, pedestal, legs, burn tubes and door casting.	Forever	3 Years

Warranty Coverage:
To ensure warranty coverage, it is very important that you register your Kuma Stove warranty within 30 days of purchase at kumastoves.com or fill out and return the warranty registration in your owner's packet. Operation of this stove in a manner inconsistent with the owner's manual, especially the burning of materials for which this unit is not certified by the EPA, will void the warranty. This warranty covers your new Kuma Stove from defects in material and workmanship for the period outlined in this warranty. Kuma Stoves reserves the right to replace, repair or authorize repair of any defective part at its sole discretion. This warranty is not transferrable and covers the original owner of the product from the time of purchase. All parts that have been replaced under this warranty will have a 90 day warranty coverage. The maximum value of this warranty is the original purchase price of the product. This warranty is subject to the conditions and limitations outlined below. This warranty covers stoves purchased from an authorized Kuma Stoves dealer.

Warranty Instructions:
For your "It's Covered" warranty claim, please contact the dealer where you purchased your stove. You may also contact Kuma stoves directly at 50145 N. Old Highway 95, Rathdrum ID 83858 or by phone at 1-888-714-5294 or contact us online at kumastoves.com. When calling, you will need to have your proof of purchase, the model name, and the serial number of your stove. When calling please remember that shipping and handling costs are not covered under this warranty.

Warranty Exclusions:
This Warranty does not cover: 1. Changes in the color of the surface of the stove as this naturally happens during the firing of the stove and is considered normal. 2. Damage to plating due to chemical cleaners, fingerprints, or scratching. 3. Shattered glass caused from wood impact. 4. Discoloration of plating or glass. 5. Expansion and contraction of the firebox causing noise. 6. Damage caused from: power surges, unauthorized modifications, using incorrect fuel and/or accelerants, shipping/handling, failure to follow the manufacturer's installation instructions, failure to follow any local building codes. 7. Damages to any product not manufactured by Kuma Stoves. 8. Any stoves ability to heat a specific area. Heating capacity is given as a guideline and is not guaranteed. 9. Shipping costs or travel time. Please talk with an authorized dealer or Kuma representative about the potential charges for travel or shipping. 10. This warranty is void in the case of abuse, over firing, unauthorized repair, alterations, improper installation and/or service.

Effective 3/1/2012